GUIDEWAY STRUCTURES GENERAL NOTES:

ADHERE TO THESE GENERAL NOTES UNLESS OTHERWISE NOTED IN THE DRAWINGS.

GENERAL:
1. DESIGN BASED ON "EARLY GEOTECHNICAL RECOMMENDATIONS PACKAGE FOR OMFS SOUTH PRELIMINARY ENGINEERING", DATED TBD, BY SHANNON & WILSON.
2. THESE NOTES APPLY TO THE MAINLINE GUIDEWAY STRUCTURES SHOWN ON THE S08 SERIES SHEETS AS WELL AS THE LEAD TRACK GUIDEWAY STRUCTURES SHOWN THE M08 SERIES SHEETS.

DESIGN CODES, STANDARDS AND SPECIFICATIONS:
ALL DESIGN IS IN ACCORDANCE WITH THE 2023 SOUND TRANSIT REQUIREMENTS MANUAL (STRM).

DESIGN LOADS:
UNIT WEIGHTS

1.	CONCRETE, PLAIN	145 PCF
2.	CONCRETE, REINFORCED	155 PCF
3.	CONCRETE, PRESTRESSED	165 PCF
4.	REINFORCING AND STRUCTURAL STEEL	490 PCF
5.	STRUCTURAL BACKFILL	130 PCF

SUPERIMPOSED DEAD LOADS (ALLOWANCE)

1.	TRACKWORK (NON-SPECIAL)	800 PLF/TRACK
2.	GUIDEWAY HANDRAIL (EACH)	50 PLF
3.	OCS POLES	NOT INCLUDED AT THIS PHASE
4.	GUIDEWAY ACOUSTIC PANELS (EACH)	170 PLF
5.	GUIDEWAY SYSTEMS DUCTBANK	89 PLF
6.	GUIDEWAY DRAINAGE PIPING (EACH)	50 PLF
7.	ELEVATED EMERGENCY WALKWAY (EACH)	13 PLF

LIVE LOADS

1.	ELEVATED EMERGENCY WALKWAYS	100 PSF
2.	GUIDEWAY SNOW LOAD	25 PSF

EARTH PRESSURES FOR ABUTMENTS AND CANTILEVER CONCRETE WALLS

1.	ACTIVE EARTH PRESSURE	31 PCF, TRIANGULAR
2.	AT-REST EARTH PRESSURE	49 PCF, TRIANGULAR
3.	ODE EQ EARTH PRESSURE	47 PCF, TRIANGULAR
4.	MDE EQ EARTH PRESSURE (RESTRAINED)	143 PCF, TRIANGULAR
5.	MDE EQ EARTH PRESSURE (UNRESTRAINED)	62 PCF, TRIANGULAR
6.	VEHICLE TRAFFIC SURCHARGE (LS LOADING)	62 PSF, UNIFORM
7.	LRT SURCHARGE (LS LOADING)	94 PSF, UNIFORM

EARTH PRESSURES ARE BASED ON SITE CLASS D AND USE OF GRAVEL BACKFILL FOR WALLS.

LIGHT RAIL VEHICLE
1. SOUND TRANSIT REQUIREMENTS MANUAL 721.3.3.2 AND FIGURE BELOW (AW3 SHOWN).

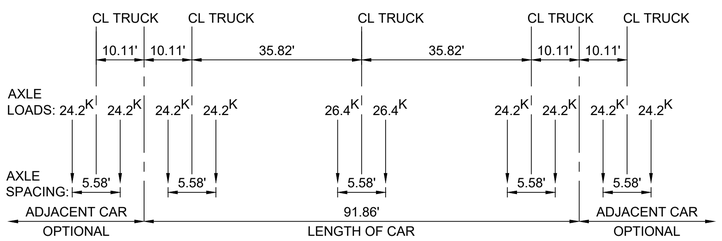

DERAILMENT LOADS
1. SOUND TRANSIT REQUIREMENTS MANUAL 721.2.3.9

SEISMIC LOADS
1. SOUND TRANSIT REQUIREMENTS MANUAL 721.2.21

MATERIAL PROPERTIES:
28-DAY CONCRETE DESIGN STRENGTH

1.	DRILLED SHAFTS	f'c = 5,000 PSI
2.	COLUMNS, BENT CAPS, AND ABUTMENTS	f'c = 4,000 PSI
3.	TRACK SLAB AND DIAPHRAGMS	f'c = 4,000 PSI
4.	POST-TENSIONED CAST-IN-PLACE CONCRETE BOX SUPERSTRUCTURE	f'c = 6,000 PSI
5.	PRESTRESSED CONCRETE GIRDERS	f'c = 9,200 PSI
6.	TRACKWORK PLINTHS	f'c = 4,000 PSI
7.	STRUCTURAL CONCRETE (NOT OTHERWISE DESIGNATED)	f'c = 4,000 PSI
8.	MUD SLAB	f'c = 2,500 PSI
9.	LEAN CONCRETE	f'c = 1,000 PSI

REINFORCING AND PRESTRESSING STEEL

1.	REINFORCING STEEL TYP, UNO	fy = 60 KSI, ASTM A706
2.	REINFORCING STEEL FOR TRACK SLAB	fy = 60 KSI, ASTM A615
3.	PRESTRESSING STEEL STRANDS	fpu = 270 KSI, ASTM A416
4.	PRESTRESSING STEEL BARS	fpu = 150 KSI, ASTM A722

STRUCTURAL STEEL

1.	ROLLED SHAPES	fy = 50 KSI, ASTM A992
2.	PLATES AND BARS	fy = 36 KSI, ASTM A36
3.	HOLLOW STEEL TUBING (CIRCULAR OR RECTANGULAR)	fy = 50 KSI, ASTM A500, GRADE C

REINFORCED CONCRETE:
CONCRETE COVER OVER REINFORCING

1.	DRILLED SHAFTS	6"
2.	CONCRETE CAST AGAINST EARTH	3"
3.	CONCRETE EXPOSED TO EARTH	2"
4.	TOP OF TRACK SLAB	2-1/2"
5.	BOTTOM OF TRACK SLAB	1-1/2"
6.	ALL OTHER CAST-IN-PLACE CONCRETE	
	PRIMARY REINFORCEMENT	2"
	STIRRUPS, TIES, HOOPS	1-1/2"
7.	PRECAST GIRDERS	
	PRIMARY REINFORCEMENT	2"
	STIRRUPS, TIES	1"

REINFORCING BAR DETAILS
1. BENDS AND HOOKS SHALL CONFORM TO ACI 315 REQUIREMENTS,
2. LAP SPLICES SHALL BE CLASS B, AND STAGGERED.

STRUCTURAL STEEL:
HIGH-STRENGTH BOLTS
1. ASTM F3125 GR A325
2. SLIP-CRITICAL CONNECTIONS, DIRECT TENSION INDICATING METHOD
3. GALVANIZED

ANCHOR RODS
1. ASTM F1554 GR 55, UNO
2. HOT-DIP GALVANIZED

WELDING
1. AWS D1.5 REQUIREMENTS FOR GUIDEWAY STRUCTURE
2. AWS D1.1 REQUIREMENTS OTHERWISE

FINISHES
1. STEEL EXPOSED WEATHER SHALL RECEIVE ONE COAT OF SHOP PRIMER AND TWO FINISH TOP COATS.
2. STEEL NOT EXPOSED TO WEATHER SHALL BE HOT-DIP GALVANIZED.

RETAINING WALLS:
MECHANICALLY STABILIZED EARTH (MSE) WALL:
PARAMETERS FOR ENGINEERING ANALYSIS
1. MSE WALLS SHALL BE DESIGNED BY THE WALL SUPPLIER. SUBMITTAL REQUIREMENTS SHALL BE IN ACCORDANCE WITH THE CONTRACT SPECIFICATIONS. MSE WALL SUPPLIER IS RESPONSIBLE FOR THE DESIGN OF INTERNAL, EXTERNAL (SLIDING, OVERTURNING, AND BEARING), AND COMPOUND STABILITY.
2. MSE WALLS SUPPORTING ABUTMENT FOOTINGS SHALL BE SPECIAL DESIGNED WALL SYSTEMS, AND SHALL CONFORM TO WSDOT GDM SECTION 15-5.3.6 "MSE WALL SUPPORTED ABUTMENTS". ALL BEARING PRESSURES FOR THE ABUTMENT SPREAD FOOTINGS HAVE BEEN DESIGNED NOT TO EXCEED 6.0 KSF (SERVICE) AND 9.0 KSF (STRENGTH). A VERTICAL SETTLEMENT MONITORING PROGRAM SHALL BE CONDUCTED FOR EACH ABUTMENT SPREAD FOOTING SUPPORTED BY MSE WALLS.

WALL EMBEDMENT:
FOR FROST PROTECTION, EROSION PROTECTION, SLIDING RESISTANCE AND TO COMPLY WITH WSDOT SPECIFICATIONS, THE FACE OF ALL WALLS SHALL BE EMBEDDED THE GREATER OF:
-2.0 FEET
-0.05H FOR WALLS SUPPORTED BY LEVEL GRADE
-0.14H FOR WALLS SUPPORTED BY FORESLOPE,
UNLESS A GREATER EMBEDMENT IS REQUIRED DUE TO LOCAL SOIL CONDITIONS, AASHTO LRFD BRIDGE DESIGN SPECIFICATIONS, FHWA NHI-10-024. EMBEDMENT IS MEASURED FROM THE BOTTOM OF ANY TOPSOIL, LANDSCAPING LAYER, OR TRACK BALLAST.

DIMENSIONS:
1. ALL PLAN DIMENSIONS SHALL BE MEASURED IN A TRUE HORIZONTAL PLANE.
2. ALL VERTICAL DIMENSIONS SHALL BE MEASURED IN A TRUE VERTICAL PLANE.
3. FIELD VERIFY ALL DIMENSIONS AND CONDITIONS.
4. DO NOT SCALE DRAWINGS.

MISCELLANEOUS:
1. REFER TO ARCHITECTURAL, MECHANICAL, ELECTRICAL, AND SYSTEMS DRAWINGS FOR LOCATION AND DIMENSIONS OF PIPING, CONDUITS, ANCHOR BOLTS AND OTHER FEATURES NOT SHOWN.
2. PROVIDE TEMPORARY BRACING AND SHORING AS REQUIRED FOR STABILITY AND PROTECTION OF THE STRUCTURE DURING ALL PHASES OF CONSTRUCTION.
3. BONDING FOR ELECTRICAL CONTINUITY IS REQUIRED FOR ALL STRUCTURAL ELEMENTS.

GUIDEWAY STRUCTURE A DRILLED SHAFT:
1. DRILLED SHAFTS ARE IN CLOSE PROXIMITY TO EXISTING UTILITIES, BUILDINGS, AND STRUCTURES. REFER TO THE UTILITY DRAWINGS, AGREEMENTS, AND OTHER CONTRACT DOCUMENTS FOR MORE INFORMATION ON WHICH ARE DESIGNATED TO REMAIN AND BE PROTECTED-IN-PLACE BY THE CONTRACTOR, AND FOR REQUIREMENTS RELATED TO PROTECTION AND MONITORING OF EXISTING INFRASTRUCTURE.
2. SHAFT LOCATIONS AND SIZES SHALL BE ADJUSTED DURING FINAL DESIGN TO CONFORM TO RIGHT-OF-WAY AGREEMENTS WITH UTILITY AND PROPERTY OWNERS, AND AGREEMENTS WITH THE CITY OF FEDERAL WAY.
3. SHAFT CASINGS ARE ASSUMED TO BE INSTALLED VIA THE OSCILLATOR / ROTATOR METHOD.
4. TEMPORARY AND PERMANENT CASING ARE ASSUMED TO BE REQUIRED TO MITIGATE AGAINST MOVEMENT OF SOILS THAT MAY BE SUBJECT TO CAVING. REFER TO THE GEOTECHNICAL REPORTS.
5. CONSIDERATIONS OF IN-SERVICE GUIDEWAY LOADING EFFECTS ON ADJACENT UTILITIES, BUILDINGS, AND STRUCTURES SHALL BE TAKEN DURING FINAL DESIGN IN ACCORDANCE WITH THE CONTRACT DOCUMENTS AND THE INFRASTRUCTURE OWNERS' REQUIREMENTS. COMBINED COLUMN SILO - SHAFT ISOLATION CASINGS OR OTHER MEASURES MAY BE NECESSARY.

SITE WALLS SUPPORTING, PROTECTING, OR POTENTIALLY IMPACTING TRACK GENERAL NOTES:

GUIDEWAY STRUCTURES GENERAL NOTES APPLY UNLESS OTHERWISE NOTED.

DESIGN CODES, STANDARDS, AND SPECIFICATIONS :
ALL DESIGN IN ACCORDANCE WITH THE 2023 SOUND TRANSIT REQUIREMENTS MANUAL.

OTHER STRUCTURES NOT SUPPORTING, PROTECTING, OR POTENTIALLY IMPACTING TRACK GENERAL NOTES:

GUIDEWAY STRUCTURES GENERAL NOTES APPLY UNLESS OTHERWISE NOTED.

DESIGN CODES, STANDARDS, AND SPECIFICATIONS :
1. WSDOT BRIDGE DESIGN MANUAL (WSDOT BDM), M 23-50.22, SEPTEMBER 2023.
2. AASHTO GUIDE SPECIFICATIONS FOR LRFD SEISMIC BRIDGE DESIGN (AASHTO SEISMIC), 2ND EDITION.
3. AASHTO LRFD BRIDGE DESIGN SPECIFICATIONS, 9TH EDITION.

DESIGN LOADS :
SAME AS GUIDEWAY STRUCTURES GENERAL NOTES, EXCEPT GUIDEWAY DEAD LOADS, LIGHT RAIL VEHICLE, AND DERAILMENT LOADS DO NOT APPLY. EARTH PRESSURES FOR ODE/MDE DO NOT APPLY AND EARTH PRESSURES ARE IN ACCORDANCE WITH THE GEOTECHNICAL RECOMMENDATIONS PACKAGE.

SEISMIC LOADS ARE NOT IN ACCORDANCE WITH THE STRM, AND INSTEAD ARE IN ACCORDANCE WITH THE WSDOT BDM.

NOT FOR CONSTRUCTION

Refer to the plan set COVER drawing for disclaimers regarding this drawing.

REFERENCE CONCEPT DRAWINGS

No.	DATE	DSN	CHK	APP	REVISION

DESIGNED BY: B. HARRIS
DRAWN BY: A. VALENCIA
CHECKED BY: J. MERTH
APPROVED BY: B. HARRIS

AHJ:

PRELIMINARY

SUBMITTED BY: PABLO LOPEZ-HILFIKER
DATE: 2/27/2024
REVIEWED BY:
DATE:

LINE IS 1" AT FULL SCALE

PACKAGE #
SCALE:
FILENAME: OMFS-STD-SZN001
CONTRACT No.: AE-0030-17
DATE: 2/27/2024

SOUND TRANSIT
PRELIMINARY ENGINEERING PLANS
OPERATIONS & MAINTENANCE FACILITY SOUTH
STRUCTURAL
GUIDEWAY, RETAINING WALL, AND BRIDGE GENERAL NOTES

DRAWING No.: STD-SZN001
FACILITY ID:
SHEET No.: REV:

02/26/24 | 8:27 AM | VALENALV
C:\PWWORKING\WEST01\D2780553\OMFS-STD-SZN001.DWG

GENERAL NOTES:

1. SPAN LENGTH MEASURED ALONG THE SOUTH BOUND (SB) TRACK.
2. FOR TRACK HORIZONTAL CURVE AND PROFILE DATA, SEE TRACK PLAN AND PROFILE DRAWINGS.
3. COLUMN SILOS NOT SHOWN. COLUMN SILOS, ADJUSTMENTS TO COLUMN AND FOUNDATION SIZES, SPAN ARRANGEMENT, AND SUPERSTRUCTURE ARTICULATION MAY ALL REQUIRE CHANGES IN FINAL DESIGN TO MEET STRM BALANCED STIFFNESS AND BALANCED FRAME GEOMETRY REQUIREMENTS.
4. SEE GUIDEWAY GENERAL NOTES FOR NOTES ON DRILLED SHAFT CONSTRUCTION FOR STRUCTURE A.

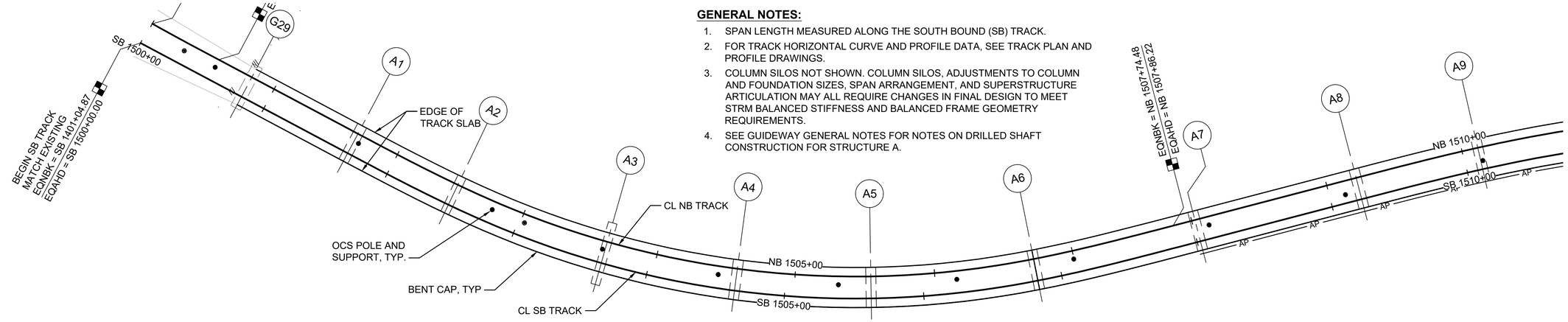

GUIDEWAY PLAN

SCALE: 1" = 40'

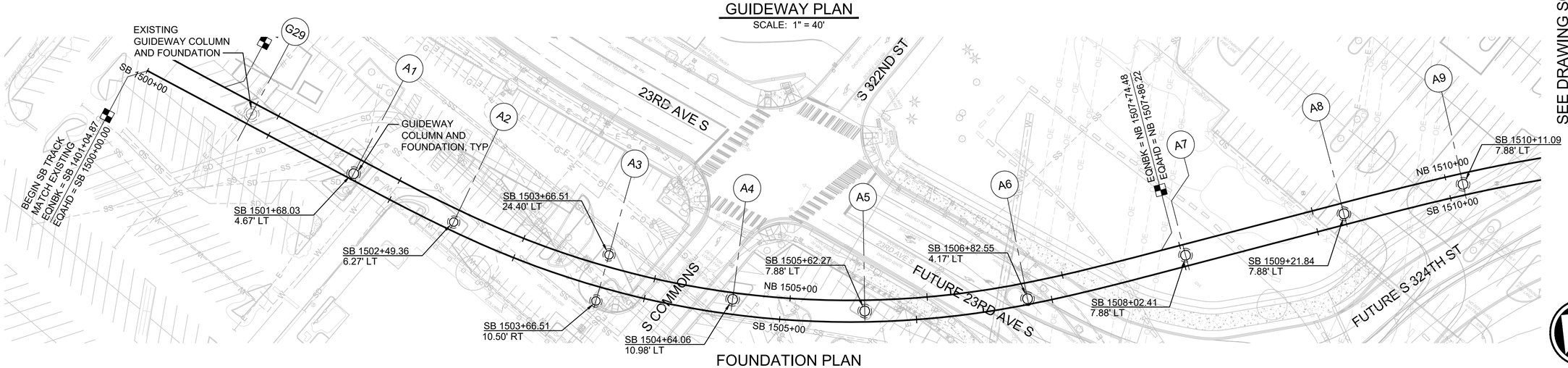

FOUNDATION PLAN

SCALE: 1" = 40'

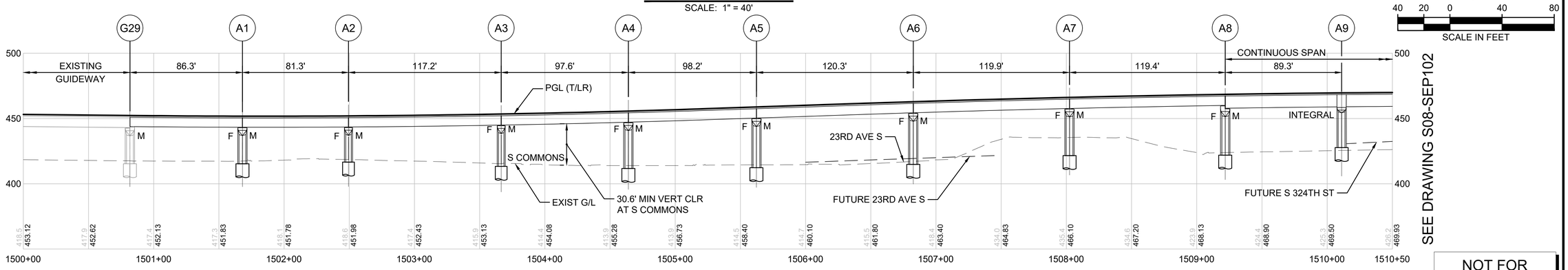

DEVELOPED ELEVATION

SCALE: 1" = 40'

SEE DRAWING S08-SEP101

SEE DRAWING S08-SEP102

NOT FOR CONSTRUCTION

Refer to the plan set COVER drawing for disclaimers regarding this drawing.

REFERENCE CONCEPT DRAWINGS

No.	DATE	DSN	CHK	APP	REVISION

DESIGNED BY: B. ROGERS
DRAWN BY: A. VALENCIA
CHECKED BY: J. MERTH
APPROVED BY: B. HARRIS

AHJ:

PRELIMINARY

HDR

SUBMITTED BY: PABLO LOPEZ-HILFIKER
DATE: 2/27/2024
REVIEWED BY:
DATE:

LINE IS 1" AT FULL SCALE

SOUNDTRANSIT

PACKAGE #

SCALE: 1"=40'
FILENAME: OMFS-S08-SEP101
CONTRACT No.: AE-0030-17
DATE: 2/27/2024

SOUND TRANSIT
PRELIMINARY ENGINEERING PLANS
OPERATIONS & MAINTENANCE FACILITY SOUTH

STRUCTURAL
MAINLINE STRUCTURES PLAN AND PROFILE
STA 1500+00 TO STA 1510+50

DRAWING No.: S08-SEP101
FACILITY ID: S08
SHEET No.:
REV:

02/22/24 | 3:22 PM | VALENALV
C:\PWWORKING\EST01\D2780553\OMFS-S08-SEP101.DWG

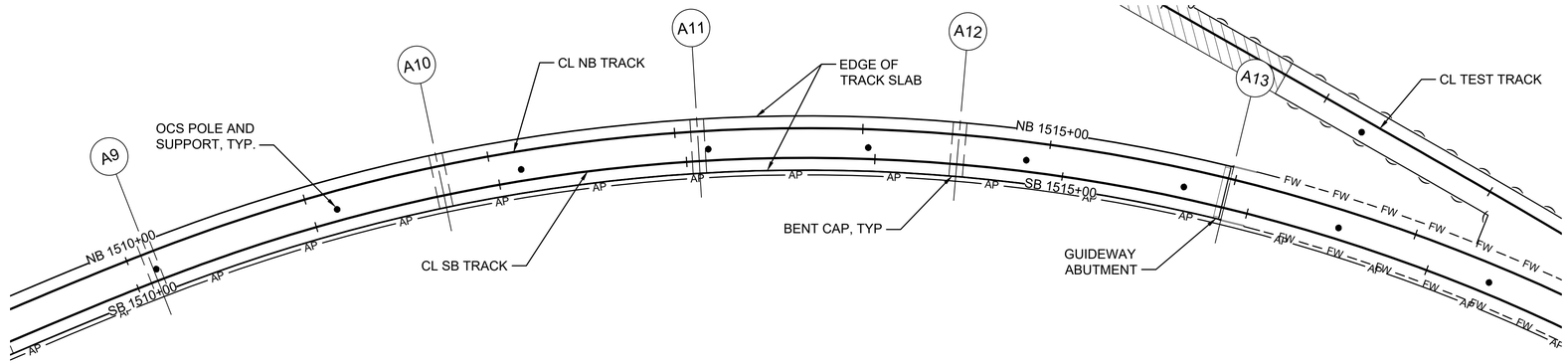

GUIDEWAY PLAN

SCALE: 1" = 40'

SEE DRAWING S08-SEP101

SEE DRAWING S08-SEP103

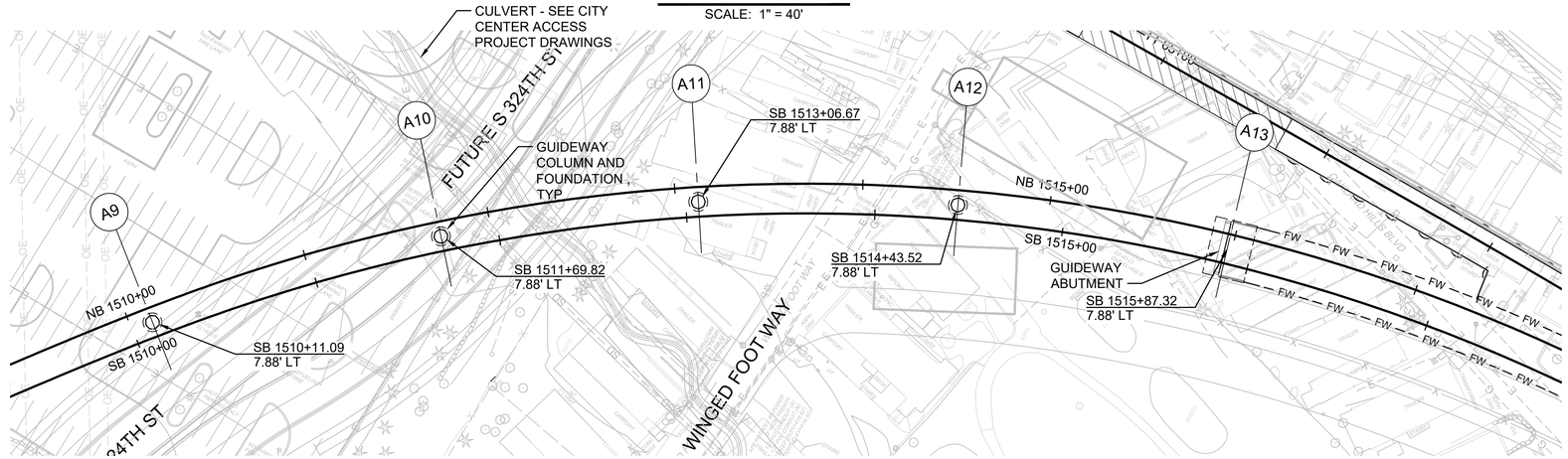

FOUNDATION PLAN

SCALE: 1" = 40'

DEVELOPED ELEVATION

SCALE: 1" = 40'

SEE DRAWING S08-SEP101

SEE DRAWING S08-SEP103

GENERAL NOTES:

1. SPAN LENGTH MEASURED ALONG THE SOUTH BOUND (SB) TRACK.
2. FOR TRACK HORIZONTAL CURVE AND PROFILE DATA, SEE TRACK PLAN AND PROFILE DRAWINGS.
3. COLUMN SILOS NOT SHOWN. COLUMN SILOS, ADJUSTMENTS TO COLUMN AND FOUNDATION SIZES, SPAN ARRANGEMENT, AND SUPERSTRUCTURE ARTICULATION MAY ALL REQUIRE CHANGES IN FINAL DESIGN TO MEET STRM BALANCED STIFFNESS AND BALANCED FRAME GEOMETRY REQUIREMENTS.
4. SEE GUIDEWAY GENERAL NOTES FOR NOTES ON DRILLED SHAFT CONSTRUCTION FOR STRUCTURE A.

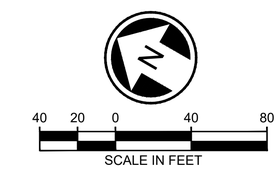

NOT FOR CONSTRUCTION

Refer to the plan set COVER drawing for disclaimers regarding this drawing.

REFERENCE CONCEPT DRAWINGS

No.	DATE	DSN	CHK	APP	REVISION

DESIGNED BY: B. ROGERS
DRAWN BY: A. VALENCIA
CHECKED BY: J. MERTH
APPROVED BY: B. HARRIS

AHJ:

PRELIMINARY

HDR

SUBMITTED BY: PABLO LOPEZ-HILFIKER
DATE: 2/27/2024
REVIEWED BY:
DATE:

LINE IS 1" AT FULL SCALE

SOUNDTRANSIT

PACKAGE #

SCALE: 1"=40'
FILENAME: OMFS-S08-SEP101
CONTRACT No.: AE-0030-17
DATE: 2/27/2024

SOUND TRANSIT
PRELIMINARY ENGINEERING PLANS
OPERATIONS & MAINTENANCE FACILITY SOUTH

STRUCTURAL
MAINLINE STRUCTURES PLAN AND PROFILE
STA 1509+50 TO STA 1517+00

DRAWING No.: S08-SEP102
FACILITY ID: S08
SHEET No.:
REV:

02/22/24 | 3:31 PM | VALENALV
C:\PWWORKING\WEST01\D2780553\OMFS-S08-SEP101.DWG

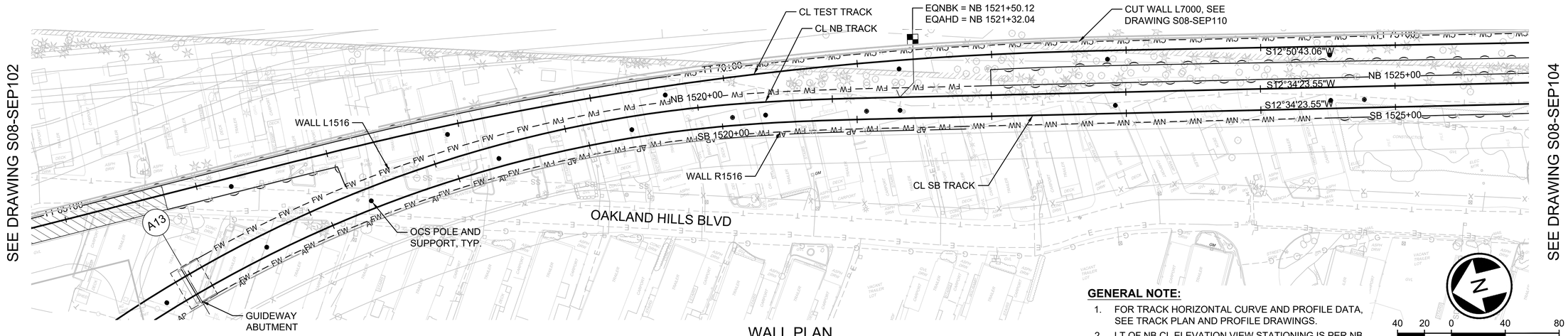

WALL PLAN

SCALE: 1" = 40'

GENERAL NOTE:

1. FOR TRACK HORIZONTAL CURVE AND PROFILE DATA, SEE TRACK PLAN AND PROFILE DRAWINGS.
2. LT OF NB CL ELEVATION VIEW STATIONING IS PER NB TRACK ALIGNMENT.
3. RT OF SB CL ELEVATION VIEW STATIONING IS PER SB TRACK ALIGNMENT.
4. PARTS OF THESE MSE WALLS MAY BE CAST-IN-PLACE CONCRETE CANTILEVER INSTEAD. SEE MSE WALL DETAILS FOR GUIDANCE ON LOCATIONS.

40 20 0 40 80
SCALE IN FEET

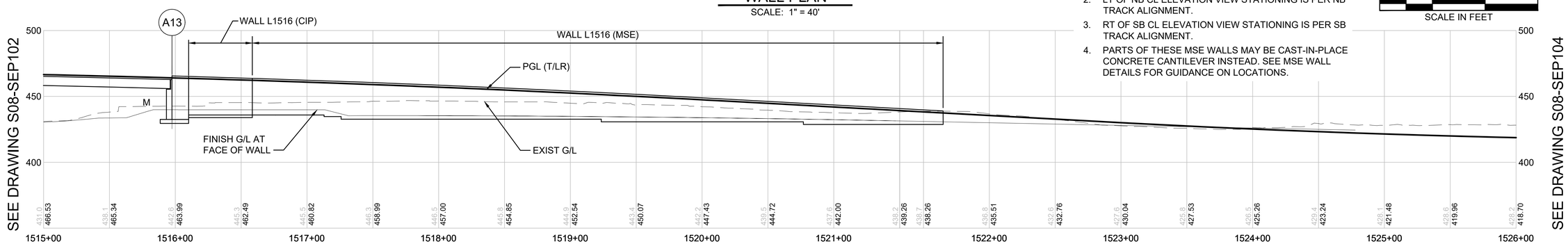

WALL L1516 DEVELOPED ELEVATION - LT OF NB CL

SCALE: 1" = 40'

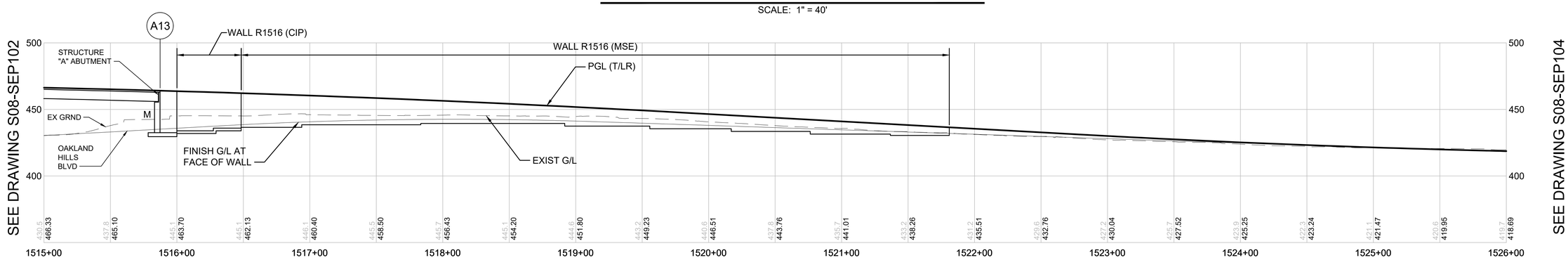

WALL R1516 DEVELOPED ELEVATION - RT OF SB CL

SCALE: 1" = 40'

NOT FOR CONSTRUCTION

Refer to the plan set COVER drawing for disclaimers regarding this drawing.

REFERENCE CONCEPT DRAWINGS

No.	DATE	DSN	CHK	APP	REVISION

DESIGNED BY: B. ROGERS
DRAWN BY: A. VALENCIA
CHECKED BY: J. MERTH
APPROVED BY: B. HARRIS

AHJ:

PRELIMINARY

HDR

SUBMITTED BY: PABLO LOPEZ-HILFIKER
DATE: 2/27/2024
REVIEWED BY:
DATE:

LINE IS 1" AT FULL SCALE

SOUNDTRANSIT

PACKAGE #

SCALE: 1"=40'
FILENAME: OMFS-S08-SEP101
CONTRACT No.: AE-0030-17
DATE: 2/27/2024

SOUND TRANSIT
PRELIMINARY ENGINEERING PLANS
OPERATIONS & MAINTENANCE FACILITY SOUTH

STRUCTURAL
MAINLINE STRUCTURES PLAN AND PROFILE
STA 1515+00 TO STA 1526+00

DRAWING No.: S08-SEP103
FACILITY ID: S08
SHEET No.:
REV:

02/22/24 | 3:35 PM | VALENALV
C:\PWWORKING\WEST01\D2780553\OMFS-S08-SEP101.DWG

WALL PLAN

SCALE: 1" = 40'

GENERAL NOTE:

1. FOR TRACK HORIZONTAL CURVE AND PROFILE DATA, SEE TRACK PLAN AND PROFILE DRAWINGS.
2. LT OF NB CL ELEVATION VIEW STATIONING IS PER NB TRACK ALIGNMENT.
3. RT OF SB CL ELEVATION VIEW STATIONING IS PER SB TRACK ALIGNMENT.

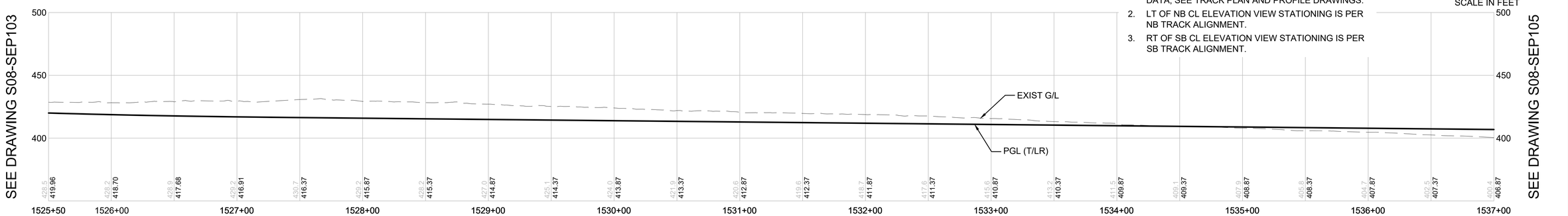

DEVELOPED ELEVATION - LT OF NB CL

SCALE: 1" = 40'

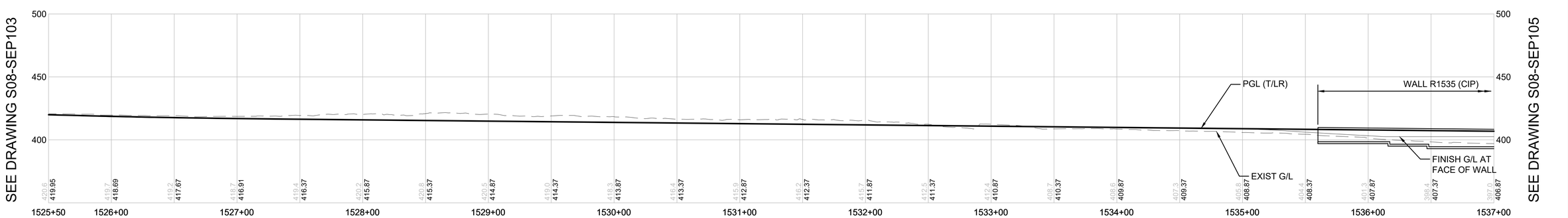

DEVELOPED ELEVATION - RT OF SB CL

SCALE: 1" = 40'

NOT FOR CONSTRUCTION

Refer to the plan set COVER drawing for disclaimers regarding this drawing.

REFERENCE CONCEPT DRAWINGS

No.	DATE	DSN	CHK	APP	REVISION

DESIGNED BY: B. ROGERS
DRAWN BY: A. VALENCIA
CHECKED BY: J. MERTH
APPROVED BY: B. HARRIS

AHJ:

PRELIMINARY

SUBMITTED BY: PABLO LOPEZ-HILFIKER
DATE: 2/27/2024
REVIEWED BY:
DATE:

LINE IS 1" AT FULL SCALE

PACKAGE #

SCALE: 1"=40'
FILENAME: OMFS-S08-SEP101
CONTRACT No.: AE-0030-17
DATE: 2/27/2024

SOUND TRANSIT
PRELIMINARY ENGINEERING PLANS
OPERATIONS & MAINTENANCE FACILITY SOUTH

STRUCTURAL
MAINLINE STRUCTURES PLAN AND PROFILE
STA 1525+50 TO STA 1537+00

DRAWING No.: S08-SEP104
FACILITY ID: S08
SHEET No.:
REV:

02/22/24 | 3:40 PM | VALENALV
C:\PWWORKING\WEST01\D2780553\OMFS-S08-SEP101.DWG

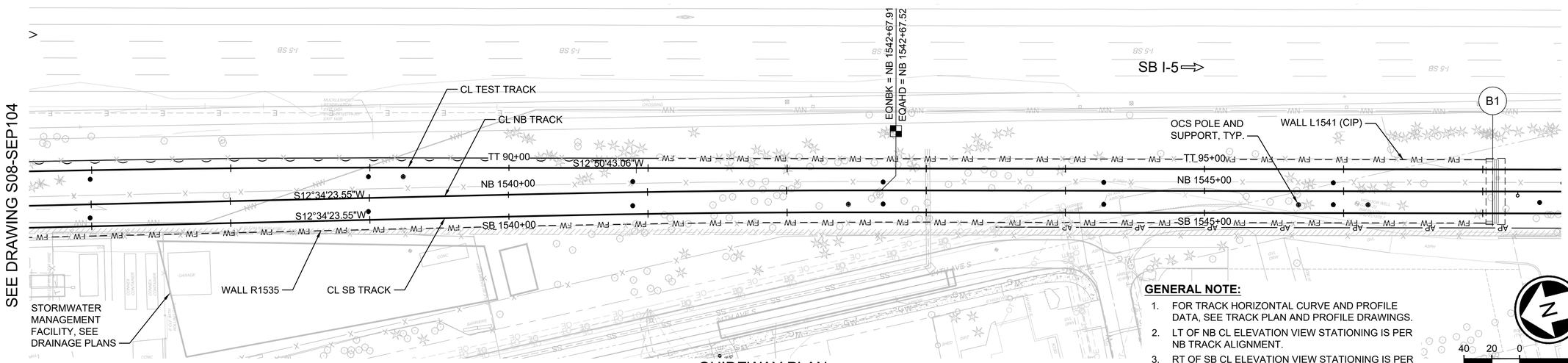

GENERAL NOTE:

1. FOR TRACK HORIZONTAL CURVE AND PROFILE DATA, SEE TRACK PLAN AND PROFILE DRAWINGS.
2. LT OF NB CL ELEVATION VIEW STATIONING IS PER NB TRACK ALIGNMENT.
3. RT OF SB CL ELEVATION VIEW STATIONING IS PER SB TRACK ALIGNMENT.

40 20 0 40 80
SCALE IN FEET

GUIDEWAY PLAN

SCALE: 1" = 40'

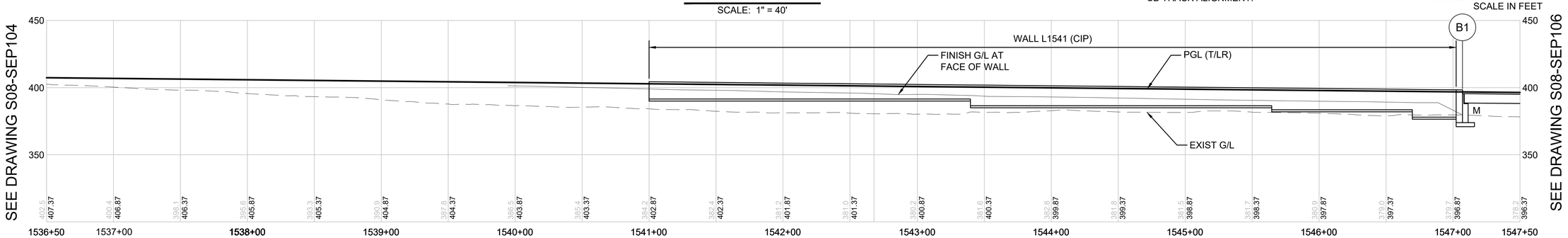

WALL L1541 DEVELOPED ELEVATION - LT OF NB CL

SCALE: 1" = 40'

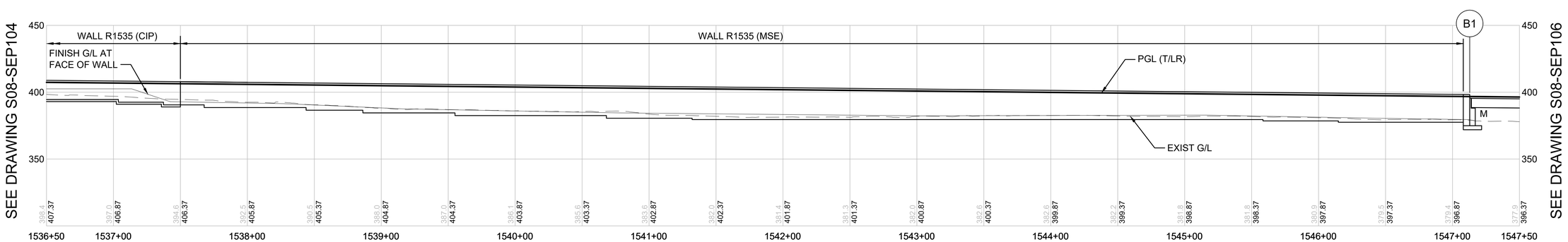

WALL R1535 DEVELOPED ELEVATION - RT OF SB CL

SCALE: 1" = 40'

NOT FOR CONSTRUCTION

Refer to the plan set COVER drawing for disclaimers regarding this drawing.

REFERENCE CONCEPT DRAWINGS

No.	DATE	DSN	CHK	APP	REVISION

DESIGNED BY: B. ROGERS
DRAWN BY: A. VALENCIA
CHECKED BY: J. MERTH
APPROVED BY: B. HARRIS

AHJ:

PRELIMINARY

SUBMITTED BY: PABLO LOPEZ-HILFIKER
DATE: 2/27/2024
REVIEWED BY:
DATE:

LINE IS 1" AT FULL SCALE

PACKAGE #

SCALE: 1"=40'
FILENAME: OMFS-S08-SEP101
CONTRACT No.: AE-0030-17
DATE: 2/27/2024

SOUND TRANSIT
PRELIMINARY ENGINEERING PLANS
OPERATIONS & MAINTENANCE FACILITY SOUTH

STRUCTURAL
MAINLINE STRUCTURES PLAN AND PROFILE
STA 1536+50 TO STA 1547+50

DRAWING No.: S08-SEP105
FACILITY ID: S08
SHEET No.:
REV:

02/22/24 | 3:45 PM | VALENALV
C:\PWWORKING\WEST01\D2780553\OMFS-S08-SEP101.DWG

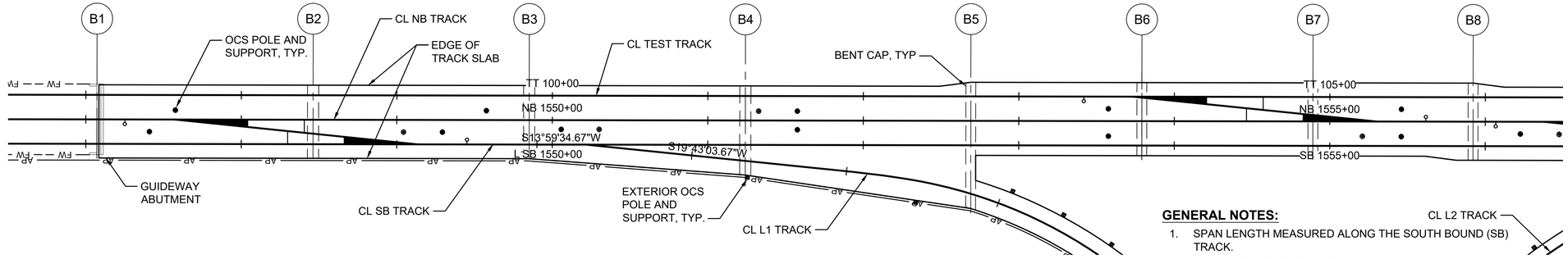

GUIDEWAY PLAN

SCALE: 1" = 40'

GENERAL NOTES:

1. SPAN LENGTH MEASURED ALONG THE SOUTH BOUND (SB) TRACK.
2. FOR TRACK HORIZONTAL CURVE AND PROFILE DATA, SEE TRACK PLAN AND PROFILE DRAWINGS.
3. LEAD TRACK GUIDEWAY STRUCTURES NOT SHOWN IN ELEVATION VIEW.
4. COLUMN SILOS NOT SHOWN. COLUMN SILOS, ADJUSTMENTS TO COLUMN AND FOUNDATION SIZES, SPAN ARRANGEMENT, AND SUPERSTRUCTURE ARTICULATION MAY ALL REQUIRE CHANGES IN FINAL DESIGN TO MEET STRM BALANCED STIFFNESS AND BALANCED FRAME GEOMETRY REQUIREMENTS.

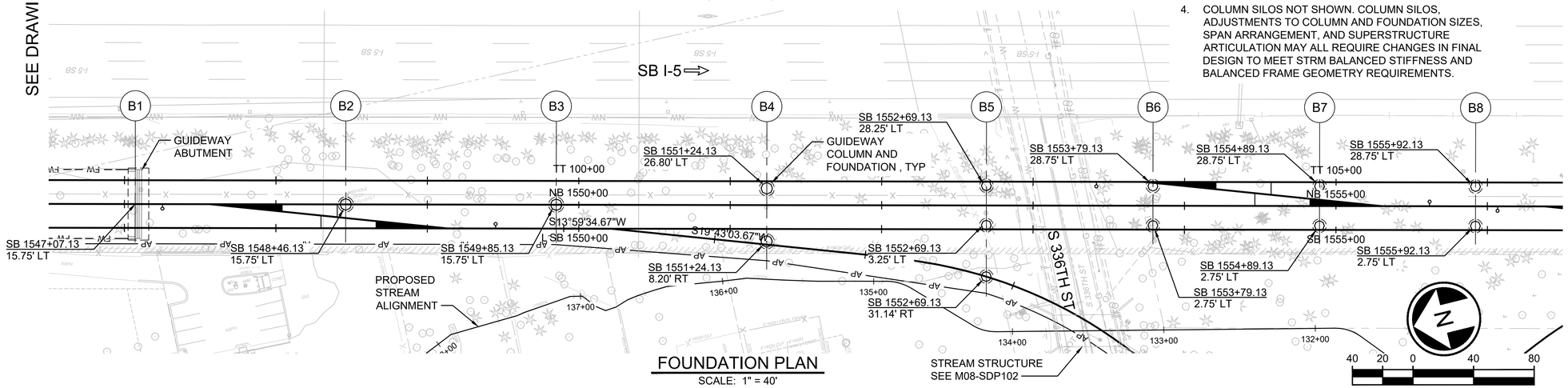

FOUNDATION PLAN

SCALE: 1" = 40'

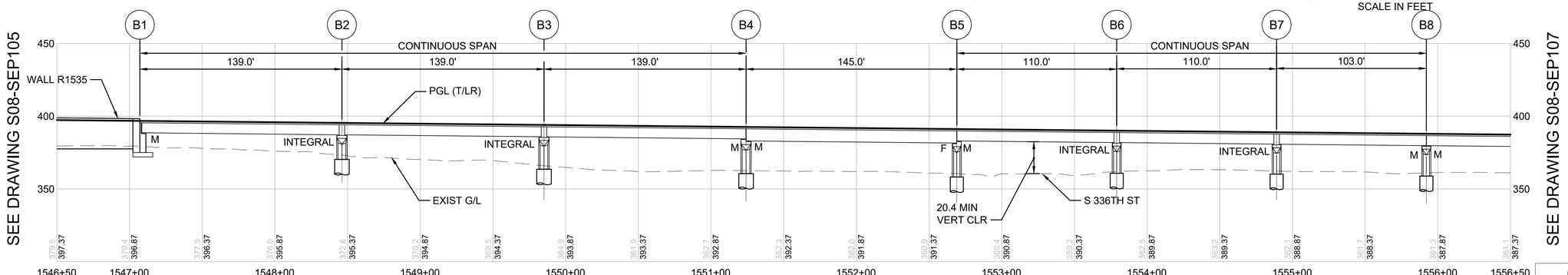

REFLECTED DEVELOPED ELEVATION

SCALE: 1" = 40'

SEE DRAWING S08-SEP105

SEE DRAWING S08-SEP107

NOT FOR CONSTRUCTION

Refer to the plan set COVER drawing for disclaimers regarding this drawing.

REFERENCE CONCEPT DRAWINGS

No.	DATE	DSN	CHK	APP	REVISION

DESIGNED BY: B. ROGERS
DRAWN BY: A. VALENCIA
CHECKED BY: J. MERTH
APPROVED BY: B. HARRIS

AHJ:

PRELIMINARY

SUBMITTED BY: PABLO LOPEZ-HILFIKER
DATE: 2/27/2024
REVIEWED BY:
DATE:

LINE IS 1" AT FULL SCALE

PACKAGE #

SCALE: 1"=40'
FILENAME: OMFS-S08-SEP101
CONTRACT No.: AE-0030-17
DATE: 2/27/2024

SOUND TRANSIT
PRELIMINARY ENGINEERING PLANS
OPERATIONS & MAINTENANCE FACILITY SOUTH

STRUCTURAL
MAINLINE STRUCTURES PLAN AND PROFILE
STA 1546+50 TO STA 1556+50

DRAWING No.: S08-SEP106
FACILITY ID: S08
SHEET No.:
REV:

02/22/24 | 5:37 PM | VALENALV
C:\PWWORKING\WEST01\D2780553\OMFS-S08-SEP101.DWG

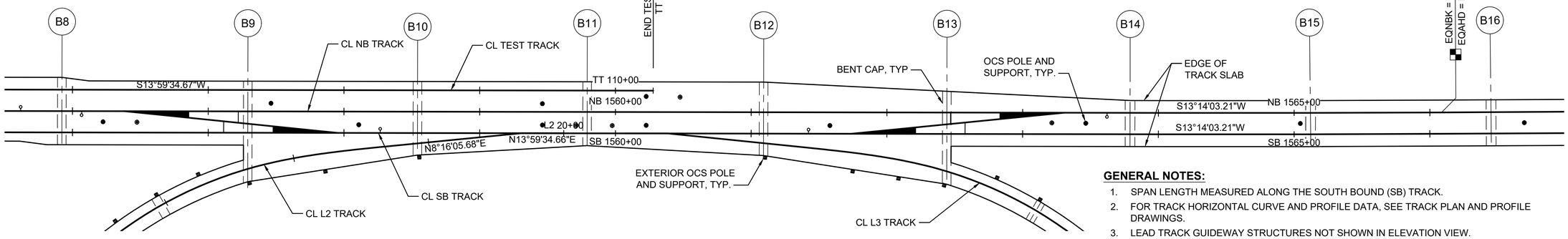

SEE DRAWING S08-SEP106

SEE DRAWING S08-SEP108

GUIDEWAY PLAN

SCALE: 1" = 40'

GENERAL NOTES:

1. SPAN LENGTH MEASURED ALONG THE SOUTH BOUND (SB) TRACK.
2. FOR TRACK HORIZONTAL CURVE AND PROFILE DATA, SEE TRACK PLAN AND PROFILE DRAWINGS.
3. LEAD TRACK GUIDEWAY STRUCTURES NOT SHOWN IN ELEVATION VIEW.
4. COLUMN SILOS NOT SHOWN. COLUMN SILOS, ADJUSTMENTS TO COLUMN AND FOUNDATION SIZES, SPAN ARRANGEMENTS, AND SUPERSTRUCTURE ARTICULATION MAY ALL REQUIRE CHANGES IN FINAL DESIGN TO MEET STRM BALANCED STIFFNESS AND BALANCED FRAME GEOMETRY REQUIREMENTS.

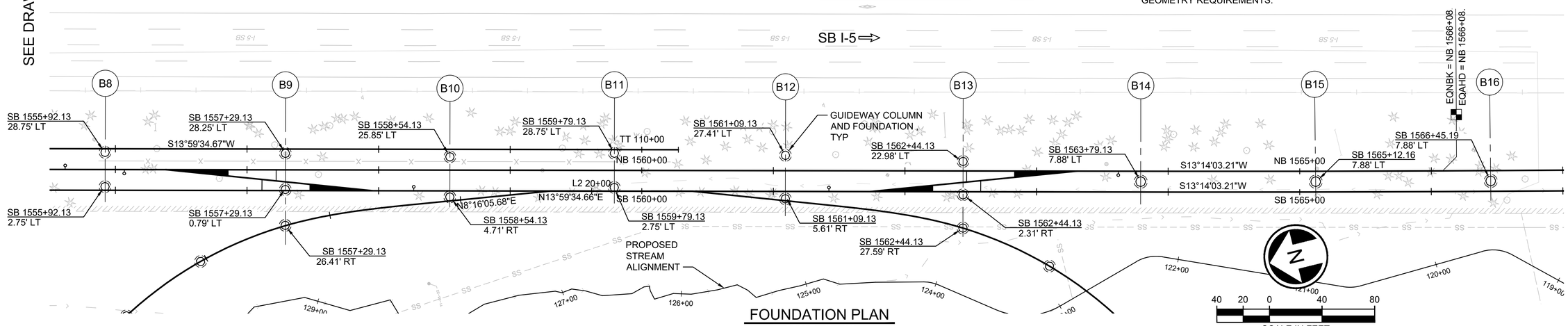

FOUNDATION PLAN

SCALE: 1" = 40'

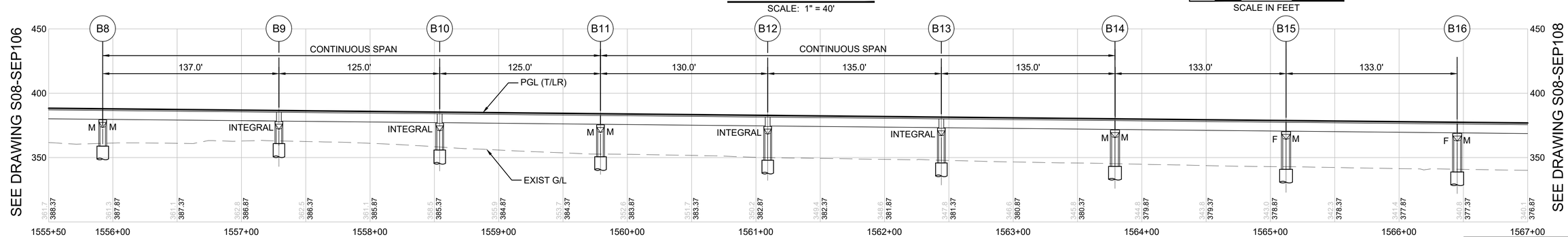

SEE DRAWING S08-SEP106

SEE DRAWING S08-SEP108

REFLECTED DEVELOPED ELEVATION

SCALE: 1" = 40'

NOT FOR CONSTRUCTION

Refer to the plan set COVER drawing for disclaimers regarding this drawing.

AHJ:

PACKAGE #

REFERENCE CONCEPT DRAWINGS

No.	DATE	DSN	CHK	APP	REVISION

DESIGNED BY: B. ROGERS
DRAWN BY: A. VALENCIA
CHECKED BY: J. MERTH
APPROVED BY: B. HARRIS

PRELIMINARY

SUBMITTED BY: PABLO LOPEZ-HILFIKER
DATE: 2/27/2024
REVIEWED BY:
DATE:

LINE IS 1" AT FULL SCALE

SCALE: 1"=40'
FILENAME: OMFS-S08-SEP101
CONTRACT No.: AE-0030-17
DATE: 2/27/2024

SOUND TRANSIT
PRELIMINARY ENGINEERING PLANS
OPERATIONS & MAINTENANCE FACILITY SOUTH

STRUCTURAL
MAINLINE STRUCTURES PLAN AND PROFILE
STA 1555+50 TO STA 1567+00

DRAWING No.: S08-SEP107
FACILITY ID: S08
SHEET No.:
REV:

02/22/24 | 4:09 PM | VALENALV
C:\PWWORKING\WEST01\D2780553\OMFS-S08-SEP101.DWG

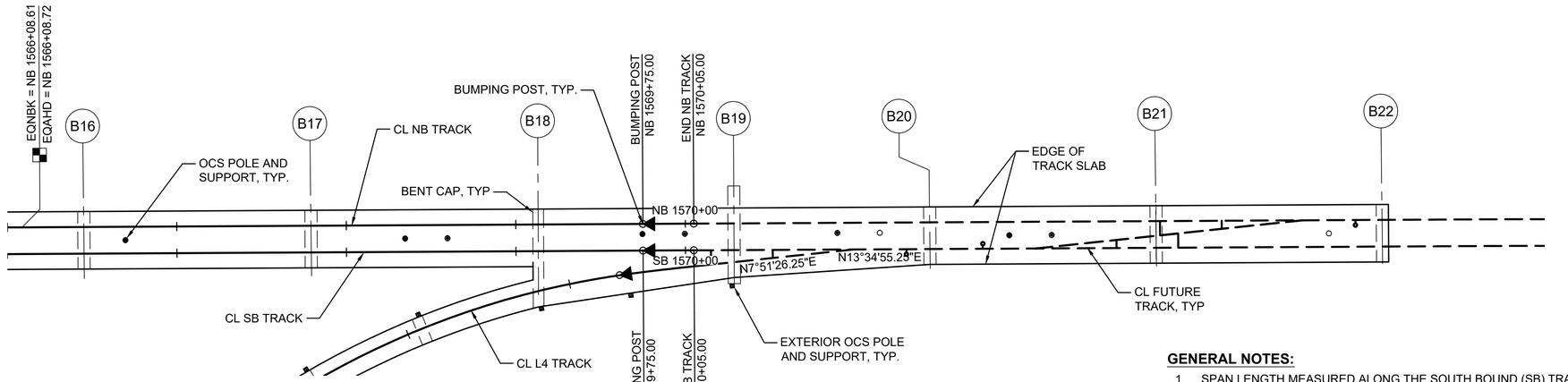

GUIDEWAY PLAN

SCALE: 1" = 40'

GENERAL NOTES:

1. SPAN LENGTH MEASURED ALONG THE SOUTH BOUND (SB) TRACK.
2. FOR TRACK HORIZONTAL CURVE AND PROFILE DATA, SEE TRACK PLAN AND PROFILE DRAWINGS.
3. LEAD TRACK GUIDEWAY STRUCTURES NOT SHOWN IN ELEVATION VIEW.
4. COLUMN SILOS NOT SHOWN. COLUMN SILOS, ADJUSTMENTS TO COLUMN AND FOUNDATION SIZES, SPAN ARRANGEMENT, AND SUPERSTRUCTURE ARTICULATION MAY ALL REQUIRE CHANGES IN FINAL DESIGN TO MEET STRM BALANCED STIFFNESS AND BALANCED FRAME GEOMETRY REQUIREMENTS.

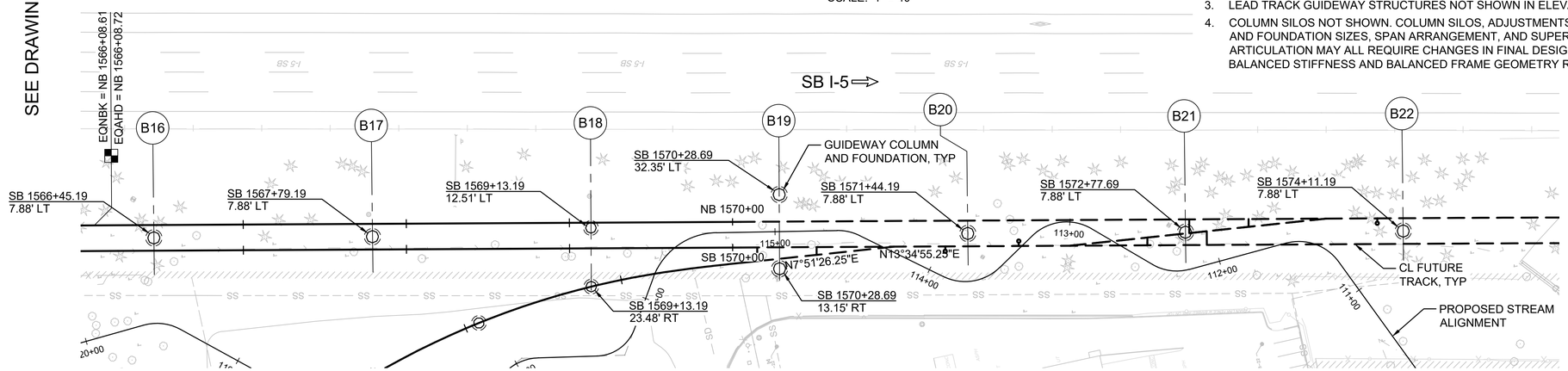

FOUNDATION PLAN

SCALE: 1" = 40'

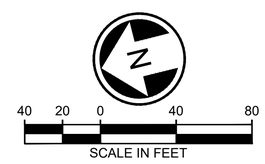

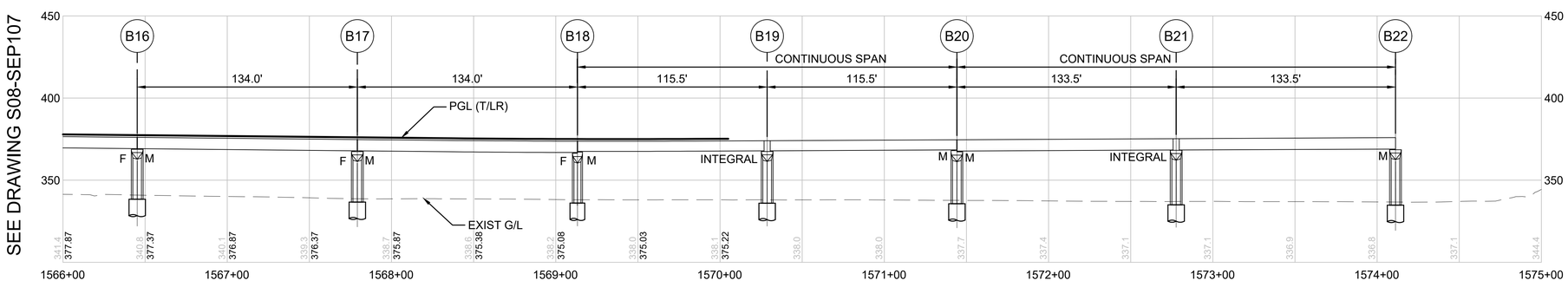

REFLECTED DEVELOPED ELEVATION

SCALE: 1" = 40'

SEE DRAWING S08-SEP107

SEE DRAWING S08-SEP107

NOT FOR CONSTRUCTION

Refer to the plan set COVER drawing for disclaimers regarding this drawing.

REFERENCE CONCEPT DRAWINGS

No.	DATE	DSN	CHK	APP	REVISION

DESIGNED BY: B. ROGERS
DRAWN BY: A. VALENCIA
CHECKED BY: J. MERTH
APPROVED BY: B. HARRIS

AHJ:

PRELIMINARY

HDR

SUBMITTED BY: PABLO LOPEZ-HILFIKER
DATE: 2/27/2024
REVIEWED BY:
DATE:

LINE IS 1" AT FULL SCALE

SOUNDTRANSIT

PACKAGE #

SCALE: 1"=40'
FILENAME: OMFS-S08-SEP101
CONTRACT No.: AE-0030-17
DATE: 2/27/2024

SOUND TRANSIT
PRELIMINARY ENGINEERING PLANS
OPERATIONS & MAINTENANCE FACILITY SOUTH

STRUCTURAL
MAINLINE STRUCTURES PLAN AND PROFILE
STA 1566+00 TO STA 1575+00

DRAWING No.: S08-SEP108
FACILITY ID: S08
SHEET No.:
REV:

02/22/24 | 4:16 PM | VALENALV
C:\PWWORKING\WEST01\D2780553\OMFS-S08-SEP101.DWG

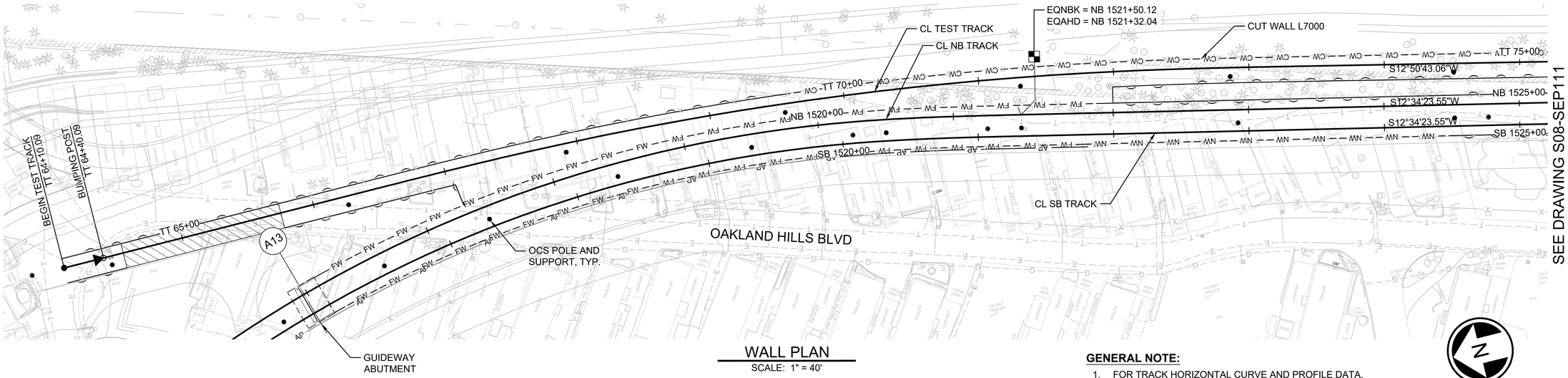

WALL PLAN

SCALE: 1" = 40'

GENERAL NOTE:

1. FOR TRACK HORIZONTAL CURVE AND PROFILE DATA, SEE TRACK PLAN AND PROFILE DRAWINGS.

40 20 0 40 80

SCALE IN FEET

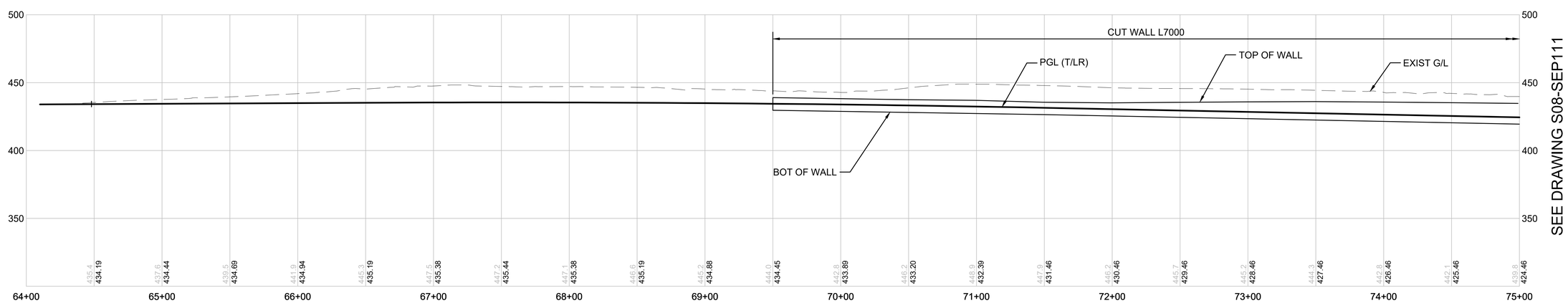

CUT WALL L7000 DEVELOPED ELEVATION - LT OF TT CL

SCALE: 1" = 40'

NOT FOR CONSTRUCTION

Refer to the plan set COVER drawing for disclaimers regarding this drawing.

REFERENCE CONCEPT DRAWINGS

No.	DATE	DSN	CHK	APP	REVISION

DESIGNED BY: B. ROGERS
DRAWN BY: A. VALENCIA
CHECKED BY: J. MERTH
APPROVED BY: B. HARRIS

AHJ:

PRELIMINARY

SUBMITTED BY: PABLO LOPEZ-HILFIKER
DATE: 2/27/2024
REVIEWED BY:
DATE:

LINE IS 1" AT FULL SCALE

PACKAGE #

SCALE: 1"=40'
FILENAME: OMFS-S08-SEP110
CONTRACT No.: AE-0030-17
DATE: 2/27/2024

SOUND TRANSIT
PRELIMINARY ENGINEERING PLANS
OPERATIONS & MAINTENANCE FACILITY SOUTH

STRUCTURAL
TEST TRACK STRUCTURES PLAN AND PROFILE
STA 69+50 TO STA 75+00

DRAWING No.: S08-SEP110
FACILITY ID: S08
SHEET No.:
REV:

02/25/24 | 10:32 PM | VALENALV
C:\PWWORKING\WEST01\D2780553\OMFS-S08-SEP110.DWG

SEE DRAWING S08-SEP110

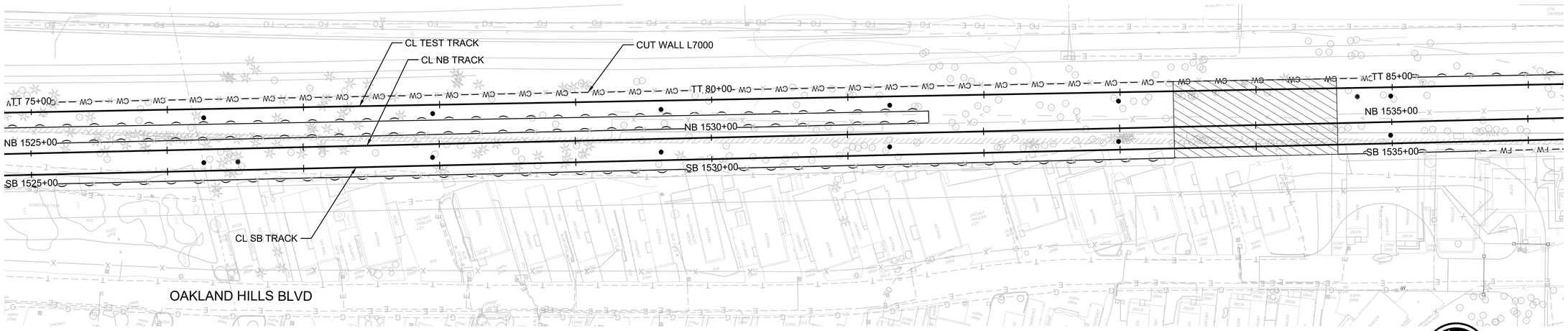

WALL PLAN

SCALE: 1" = 40'

GENERAL NOTE:

1. FOR TRACK HORIZONTAL CURVE AND PROFILE DATA, SEE TRACK PLAN AND PROFILE DRAWINGS.

40 20 0 40 80

SCALE IN FEET

SEE DRAWING S08-SEP110

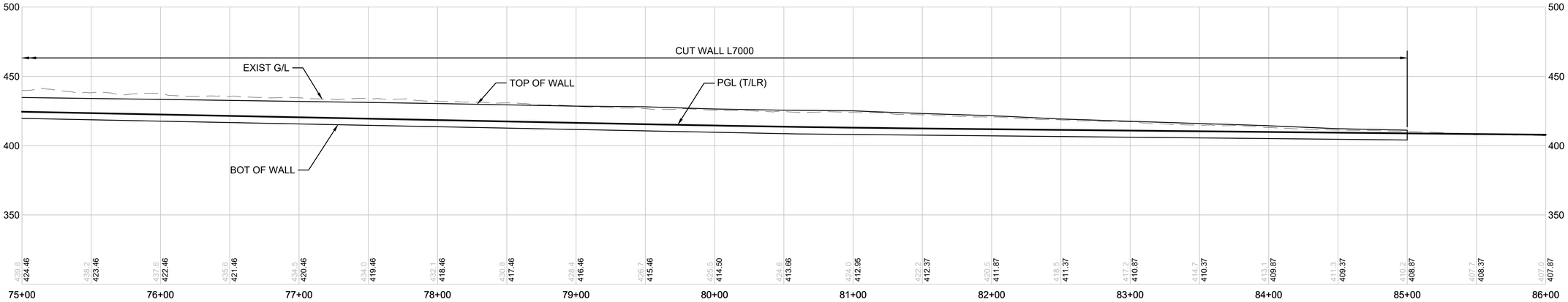

CUT WALL L7000 DEVELOPED ELEVATION - LT OF TT CL

SCALE: 1" = 40'

NOT FOR CONSTRUCTION

Refer to the plan set COVER drawing for disclaimers regarding this drawing.

REFERENCE CONCEPT DRAWINGS

No.	DATE	DSN	CHK	APP	REVISION

DESIGNED BY: B. ROGERS
DRAWN BY: A. VALENCIA
CHECKED BY: J. MERTH
APPROVED BY: B. HARRIS

AHJ:

PRELIMINARY

SUBMITTED BY: PABLO LOPEZ-HILFIKER
DATE: 2/27/2024
REVIEWED BY:
DATE:

LINE IS 1" AT FULL SCALE

PACKAGE #

SCALE:
FILENAME: OMFS-S08-SEP110
CONTRACT No.: AE-0030-17
DATE: 2/27/2024

SOUND TRANSIT
PRELIMINARY ENGINEERING PLANS
OPERATIONS & MAINTENANCE FACILITY SOUTH

STRUCTURAL
TEST TRACK STRUCTURES PLAN AND PROFILE
STA 75+00 TO STA 85+00

DRAWING No.: S08-SEP111
FACILITY ID: S08
SHEET No.:
REV:

02/25/24 | 10:28 PM | VALENALV
C:\PWWORKING\WEST01\D2780553\OMFS-S08-SEP110.DWG

FOUNDATION SCHEDULE

COLUMN / PIER ID	FOUNDATION TYPE	BOTTOM OF COLUMN EL (FT)	SHAFT LENGTH (FT)
G29	EXISTING	EXISTING	EXISTING
A1			
A2			
A3			
A4			
A5			
A6			
A7			
A8			
A9			
A10			
A11			
A12			
A13	ABUT-3 SIM (NOTE 1)		
B1	ABUT-3		
B2			
B3			
B4			
B5			
B6			
B7			
B8			
B9			
B10			
B11			
B12			
B13			
B14			
B15			
B16			
B17			
B18			
B19			
B20			
B21			
B22			

FOUNDATION SCHEDULE

COLUMN / PIER ID	FOUNDATION TYPE	BOTTOM OF COLUMN EL (FT)	SHAFT LENGTH (FT)
C1			
C2	ABUT-1B		
D1			
D2			
D3			
D4			
D5	ABUT-1		
E1			
E2			
E3			
E4	ABUT-1		
F1			
F2			
F3			
F4			
F5	ABUT-1		

NOTES:

1. ABUTMENT SIMILAR TO ABUT-3, BUT WITH TWO TRACKS, AND WITH CIP WALLS AT ENDS OF BOTH WINGWALLS.
2. FOUNDATION TYPES AND SHAFT LENGTHS NOT SHOWN TO BE DETERMINED IN FINAL DESIGN..
3. COLUMN SILOS MAY BE REQUIRED AT SOME PIERS TO MEET STRM BALANCED STIFFNESS AND BALANCED FRAME GEOMETRY REQUIREMENTS..

FOUNDATION LEGEND

FOUNDATION TYPE	DRAWING REFERENCE	DESCRIPTION
7DS	STD-SVD001	7' DIAMETER DRILLED SHAFT FOR EACH COLUMN
8DS	STD-SVD001	8' DIAMETER DRILLED SHAFT FOR EACH COLUMN
9DS	STD-SVD001	9' DIAMETER DRILLED SHAFT FOR EACH COLUMN
10DS	STD-SVD001	10' DIAMETER DRILLED SHAFT FOR EACH COLUMN
11DS	STD-SVD001	11' DIAMETER DRILLED SHAFT FOR EACH COLUMN
12DS	STD-SVD001	12' DIAMETER DRILLED SHAFT FOR EACH COLUMN
ABUT-1	M08-SBD004	SINGLE-TRACK ABUTMENT ON SPREAD FOOTING ON MSE
ABUT-2	STD-SBD008	DOUBLE-TRACK ABUTMENT ON SPREAD FOOTING ON MSE
ABUT-3	STD-SBD010	THREE TRACK ABUTMENT ON SPREAD FOOTING
ABUT-1B	M08-SBD003	ABUTMENT ON SPREAD FOOTING AT LEAD 1

NOT FOR CONSTRUCTION

Refer to the plan set COVER drawing for disclaimers regarding this drawing.

REFERENCE CONCEPT DRAWINGS

No.	DATE	DSN	CHK	APP	REVISION

DESIGNED BY: B. HARRIS
DRAWN BY: A. VALENCIA
CHECKED BY: J. MERTH
APPROVED BY: B. HARRIS

AHJ:

PRELIMINARY

SUBMITTED BY: PABLO LOPEZ-HILFIKER
DATE: 2/27/2024
REVIEWED BY:
DATE:

LINE IS 1" AT FULL SCALE

PACKAGE #

SCALE:
FILENAME: OMFS-STD-SFS001
CONTRACT No.: AE-0030-17
DATE: 2/27/2024

SOUND TRANSIT
PRELIMINARY ENGINEERING PLANS
OPERATIONS & MAINTENANCE FACILITY SOUTH

STRUCTURAL
AERIAL GUIDEWAY - SUBSTRUCTURE
FOUNDATION SCHEDULE

DRAWING No.: **STD-SFS001**
FACILITY ID: S08
SHEET No.:
REV:

02/25/24 | 10:58 PM | VALENALV
C:\PWWORKING\WEST01\D2780553\OMFS-STD-SFS001.DWG

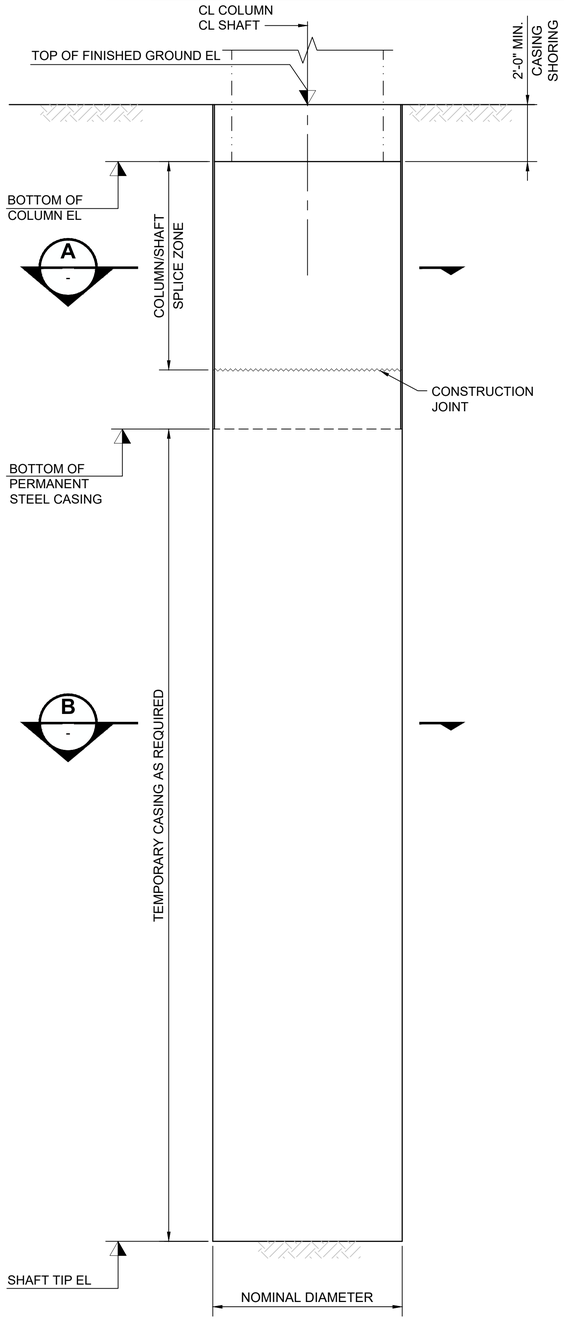

ELEVATION - DRILLED SHAFT TYPE 7DS/8DS/9DS/10DS/11DS/12DS

SCALE: 1/4" = 1'-0"

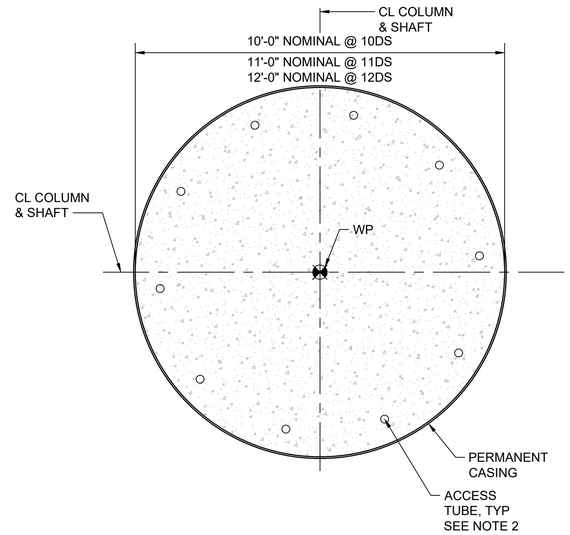

TYPE 12DS/11DS/10DS

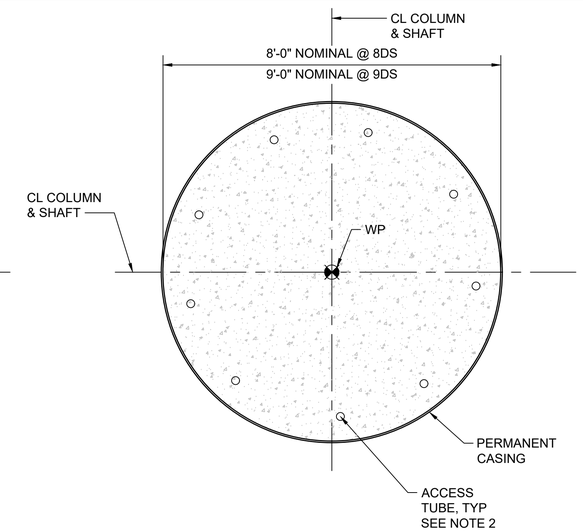

TYPE 8DS/9DS

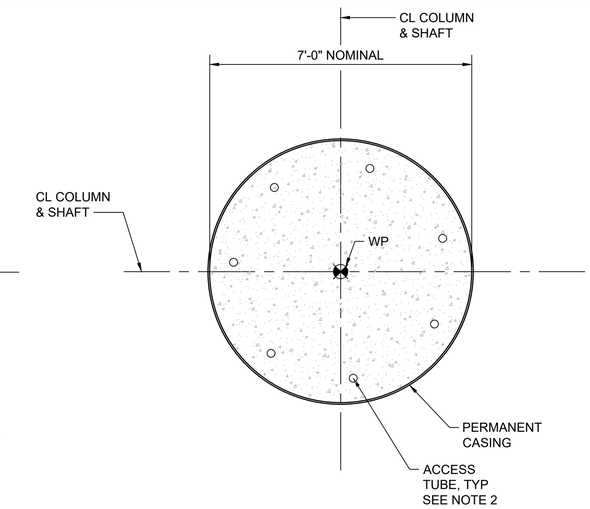

TYPE 7DS

SECTION A - SCALE: 1/2" = 1'-0"

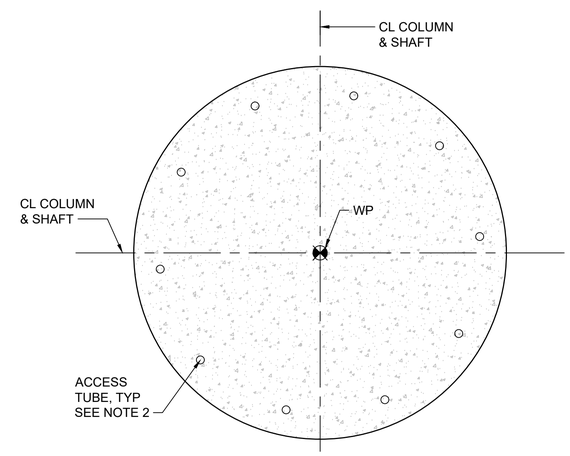

TYPE 12DS/11DS/10DS

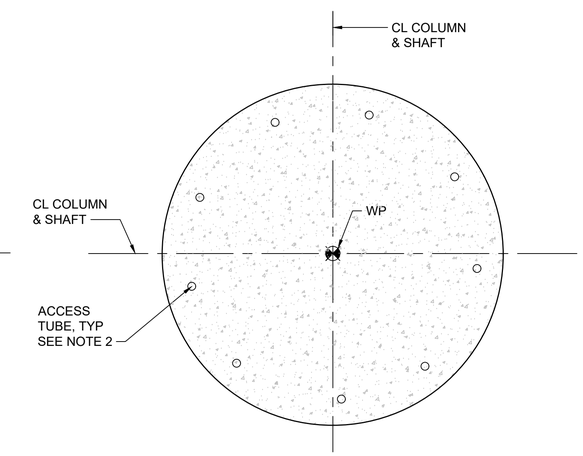

TYPE 8DS/9DS

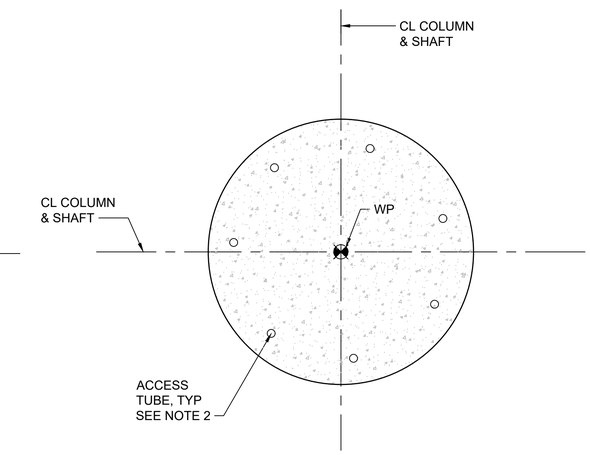

TYPE 7DS

SECTION B - SCALE: 1/2" = 1'-0"

NOTES:

1. STANDARD SHAFT CONSTRUCTION METHOD SHOWN. SHAFTS CONSTRUCTED WITH THE OSCILLATOR METHOD WOULD USE A PERMANENT SLIP CASING WITH BACKFILLED VOID AS NEEDED.
2. SEE CONTRACT SPECIFICATIONS FOR NUMBER, ORIENTATION, AND ASSEMBLY OF ACCESS TUBES.

NOT FOR CONSTRUCTION

Refer to the plan set COVER drawing for disclaimers regarding this drawing.

REFERENCE CONCEPT DRAWINGS

No.	DATE	DSN	CHK	APP	REVISION

DESIGNED BY: B. ROGERS
DRAWN BY: A. VALENCIA
CHECKED BY: J. MERTH
APPROVED BY: B. HARRIS

AHJ:

PRELIMINARY

SUBMITTED BY: PABLO LOPEZ-HILFIKER
DATE: 2/27/2024
REVIEWED BY:
DATE:

LINE IS 1" AT FULL SCALE

PACKAGE #
SCALE:
FILENAME: OMFS-STD-SVD001
CONTRACT No.: AE-0030-17
DATE: 2/27/2024

SOUND TRANSIT
PRELIMINARY ENGINEERING PLANS
OPERATIONS & MAINTENANCE FACILITY SOUTH
STRUCTURAL
AERIAL GUIDEWAY - SUBSTRUCTURE
DRILLED SHAFT DETAILS

DRAWING No.: STD-SVD001
FACILITY ID: S08
SHEET No.:
REV:

02/25/24 | 10:59 PM | VALENALV
C:\PWWORKING\WEST01\D2780553\OMFS-STD-SVD001.DWG

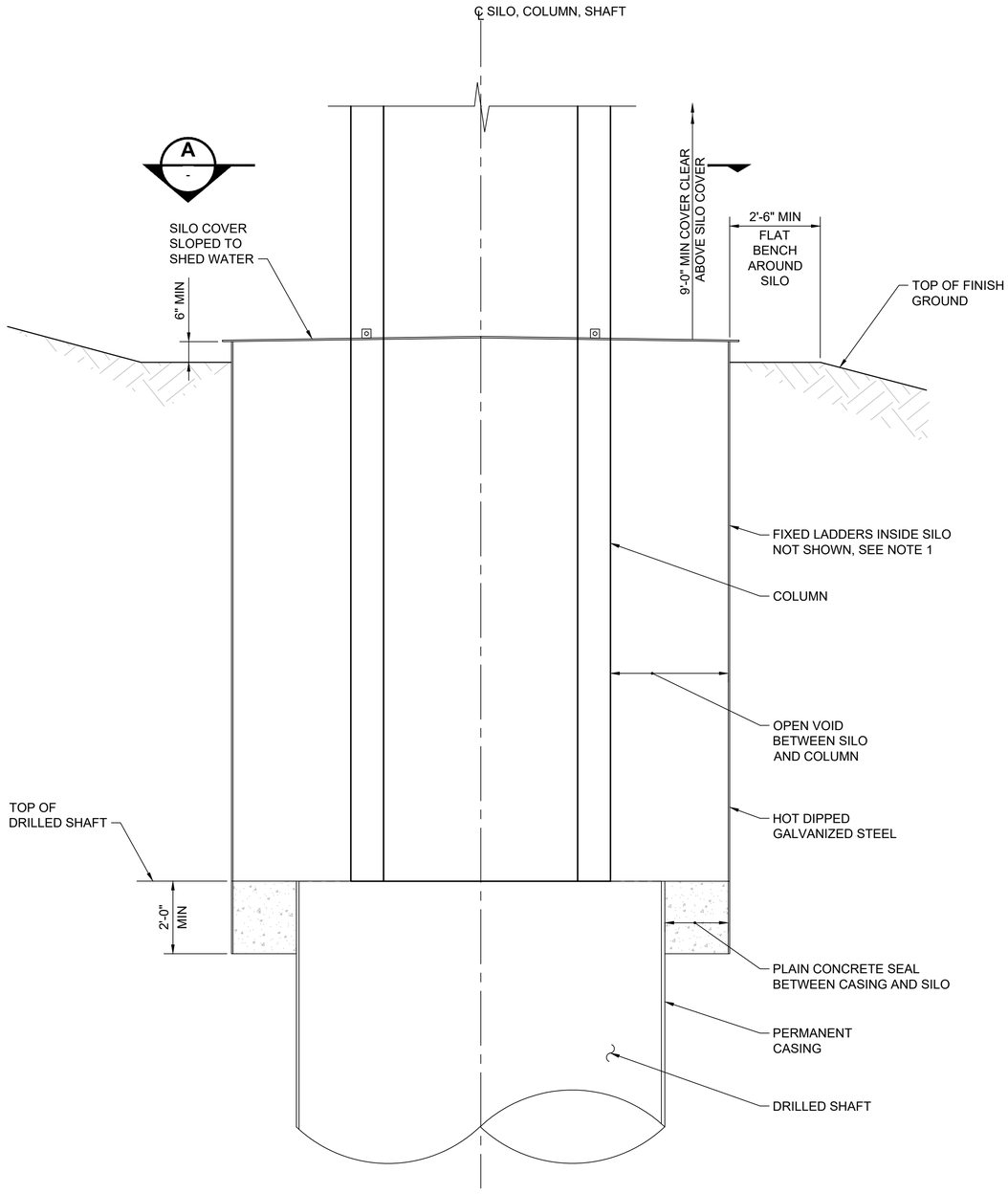

ELEVATION - TYPICAL COLUMN SILO AT DRILLED SHAFT

SCALE: 1/2" = 1'-0"

GENERAL NOTES:

1. FIXED LADDER INSIDE SILO BELOW EACH ACCESS HATCH NOT SHOWN. LADDERS TO BE WAC COMPLIANT AND CONFORM TO ANSI A14.3200.
2. ATTACHMENTS FOR REMOVAL OF SILO COVER VIA PULLEY SYSTEM REQUIRED BUT NOT SHOWN.
3. BASE FOR DAVIT SYSTEM REQUIRED BY SOUND TRANSIT REQUIREMENTS MANUAL NOT SHOWN.
4. ALL PLATES OVER COLUMN SILOS SHALL BE DETAILED TO SLIDE FREELY ON TOP OF SILO.

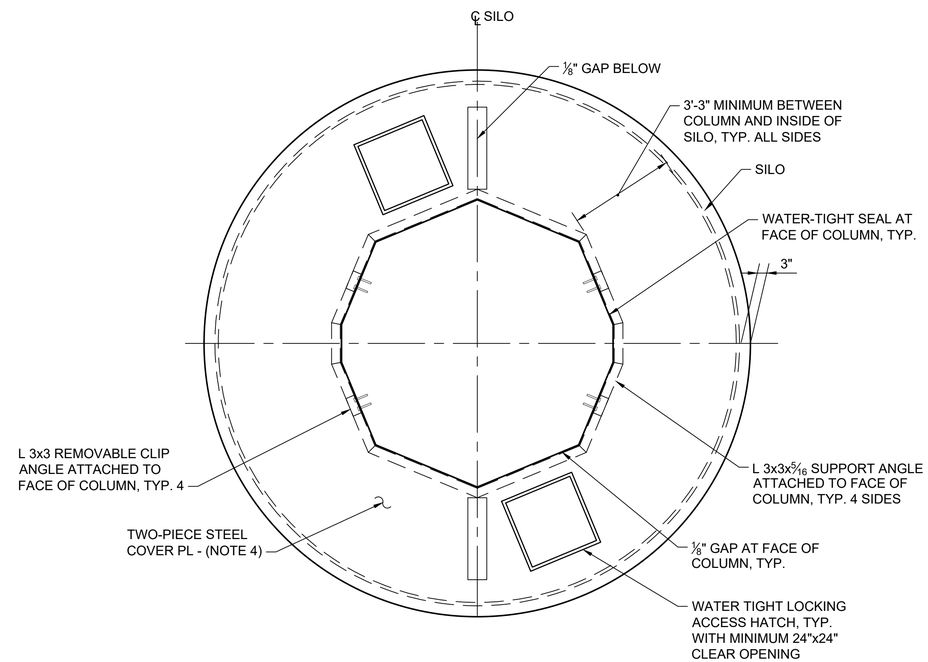

SECTION A -

SCALE: 1/2" = 1'-0"

NOT FOR CONSTRUCTION

Refer to the plan set COVER drawing for disclaimers regarding this drawing.

REFERENCE CONCEPT DRAWINGS

No.	DATE	DSN	CHK	APP	REVISION

DESIGNED BY: B. ROGERS
DRAWN BY: A. VALENCIA
CHECKED BY: J. MERTH
APPROVED BY: B. HARRIS

AHJ:

PRELIMINARY

SUBMITTED BY: PABLO LOPEZ-HILFIKER
DATE: 2/27/2024
REVIEWED BY:
DATE:

LINE IS 1" AT FULL SCALE

SCALE:
FILENAME: OMFS-STD-SVD003
CONTRACT No.: AE-0030-17
DATE: 2/27/2024

PACKAGE #

SOUND TRANSIT
PRELIMINARY ENGINEERING PLANS
OPERATIONS & MAINTENANCE FACILITY SOUTH
STRUCTURAL
AERIAL GUIDEWAY - SUBSTRUCTURE
DRILLED SHAFT - COLUMN SILO DETAILS

DRAWING No.: **STD-SVD003**
FACILITY ID: S08
SHEET No.:
REV:

02/22/24 | 4:51 PM | VALENALV
C:\PWWORKING\WEST01\D2780553\OMFS-STD-SVD003.DWG

SUBSTRUCTURE SCHEDULE		
COLUMN / PIER ID	SUBSTRUCTURE TYPE	COLUMN SIZE
G29	EXST	EXISTING
A1	OB	
A2	2C	
A3	OB	
A4	OB	
A5	SC	
A6	OB	
A7	SC	
A8	SC	
A9	SC-I	
A10	SC-I	
A11	SC	
A12	SC	
A13	ABUT-2	
B1	ABUT-3	
B2	HH	
B3	HH	
B4	2C	
B5	3C	
B6	2C-I	
B7	2C-I	
B8	2C	
B9	3C-I	
B10	2C-I	
B11	2C	
B12	2C-I	
B13	3C-I	
B14	SC	
B15	SC	
B16	SC	
B17	SC	
B18	2C	
B19	2CI	
B20	SC	
B21	SC-I	
B22	SC	

SUBSTRUCTURE SCHEDULE		
COLUMN / PIER ID	SUBSTRUCTURE TYPE	COLUMN SIZE
C1	SC-B	7'-6"
C2	ABUT-1B	N/A
D1	SC-L	
D2	SC-L	
D3	SC-L	
D4	SC-L	
D5	ABUT-1	
E1	SC-L	
E2	SC-L	
E3	SC-L	
E4	ABUT-1	
F1	SC-L	
F2	SC-L	
F3	SC-L	
F4	SC-L	
F5	ABUT-1	

NOTES:

1. SUBSTRUCTURE TYPES MAY NEED TO CHANGE IN FINAL DESIGN TO MEET STRM BALANCED STIFFNESS AND BALANCED FRAME GEOMETRY REQUIREMENTS.
2. COLUMN SIZES NOT SHOWN TO BE DETERMINED IN FINAL DESIGN.

SUBSTRUCTURE LEGEND		
SUBSTRUCTURE TYPE	DESCRIPTION	DRAWING REFERENCE
EXST	EXISTING BENT	STD-SED018
SC	SINGLE-COLUMN BENT AT DOUBLE TRACK	STD-SBD002
SC-I	INTEGRAL SINGLE-COLUMN BENT AT DOUBLE TRACK	STD-SBD003
2C-I	INTEGRAL TWO-COLUMN BENT	STD-SBD004
2C	UNDERSLUNG TWO-COLUMN BENT	STD-SBD005
3C	UNDERSLUNG THREE-COLUMN BENT WITH LEAD TRACK	STD-SBD006
3C-I	INTEGRAL THREE-COLUMN BENT WITH LEAD TRACK	STD-SBD007
ABUT-2	DOUBLE-TRACK ABUTMENT ON SPREAD FOOTING ON MSE	STD-SBD008
ABUT-3	THREE TRACK ABUTMENT ON SPREAD FOOTING	STD-SBD010
OB	TYPICAL OFFSET BENT AT DOUBLE TRACK	STD-SBD011
HH	INTEGRAL HAMMERHEAD BENT AT 3-TRACK	STD-SBD012
SC-L	TYPICAL SINGLE-COLUMN BENT AT LEAD TRACK	M08-SBD001
SC-B	INTEGRAL SINGLE-COLUMN BENT AT LEAD 1	M08-SBD002
ABUT-1B	ABUTMENT AT LEAD 1	M08-SBD003
ABUT-1	TYPICAL ABUTMENT AT LEAD TRACKS	M08-SBD004

NOT FOR CONSTRUCTION

Refer to the plan set COVER drawing for disclaimers regarding this drawing.

REFERENCE CONCEPT DRAWINGS

No.	DATE	DSN	CHK	APP	REVISION

DESIGNED BY: B. HARRIS
DRAWN BY: A. VALENCIA
CHECKED BY: J. MERTH
APPROVED BY: B. HARRIS

PRELIMINARY

AHJ:

SUBMITTED BY: PABLO LOPEZ-HILFIKER
DATE: 2/27/2024
REVIEWED BY:
DATE:

LINE IS 1" AT FULL SCALE

PACKAGE #

SCALE:
FILENAME: OMFS-STD-SSS001
CONTRACT No.: AE-0030-17
DATE: 2/27/2024

SOUND TRANSIT
PRELIMINARY ENGINEERING PLANS
OPERATIONS & MAINTENANCE FACILITY SOUTH

STRUCTURAL
AERIAL GUIDEWAY - SUBSTRUCTURE
SUBSTRUCTURE SCHEDULE

DRAWING No.: **STD-SSS001**
FACILITY ID: S08
SHEET No.:
REV:

02/25/24 | 11:01 PM | VALENALV
C:\PWWORKING\WEST01\D2780553\OMFS-STD-SSS001.DWG

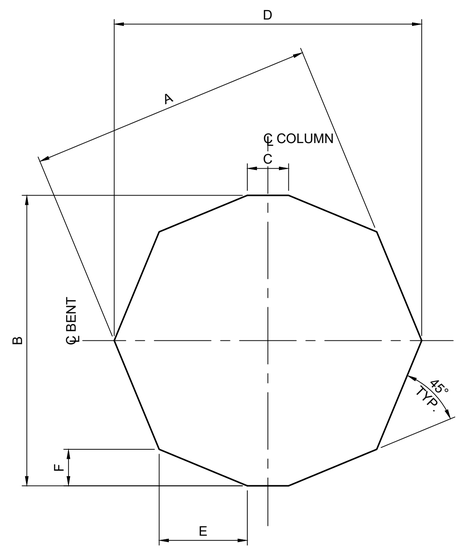

SECTION A
SCALE: 1/2" = 1'-0"

TYPICAL COLUMN GEOMETRY						
COL. MK	A	B	C	D	E	F
55	5-6"	5'-8"	0'-8 5/16"	5'-11 7/16"	1'-9 1/8"	0'-8 3/4"
60	6'-0"	6'-2"	0'-9 1/2"	6'-5 15/16"	1'-10 13/16"	0'-9 7/16"
65	6'-6"	6'-8"	0'-10 11/16"	7'-0 7/16"	2'-0 1/2"	0'-10 1/8"
70	7'-0"	7'-2"	0'-11 7/8"	7'-6 15/16"	2'-2 3/16"	0'-10 7/8"
75	7'-6"	7'-8"	1'-1 1/16"	8'-1 7/16"	2'-3 15/16"	0'-11 9/16"
80	8'-0"	8'-2"	1'-2 1/4"	8'-7 15/16"	2'-5 9/16"	1'-0 1/4"
85	8'-6"	8'-8"	1'-3 1/2"	9'-2 7/16"	2-7 5/16"	1'-0 15/16"
90	9'-0"	9'-2"	1'-4 5/8"	9'-8 7/8"	2'-9"	1'-1 11/16"

NOT FOR CONSTRUCTION

Refer to the plan set COVER drawing for disclaimers regarding this drawing.

REFERENCE CONCEPT DRAWINGS

No.	DATE	DSN	CHK	APP	REVISION

DESIGNED BY: B. ROGERS
DRAWN BY: A. VALENCIA
CHECKED BY: J. MERTH
APPROVED BY: B. HARRIS

AHJ:

PRELIMINARY

SUBMITTED BY: PABLO LOPEZ-HILFIKER
DATE: 2/27/2024
REVIEWED BY:
DATE:

LINE IS 1" AT FULL SCALE

PACKAGE #
SCALE:
FILENAME: OMFS-STD-SHX001
CONTRACT No.: AE-0030-17
DATE: 2/27/2024

SOUND TRANSIT
PRELIMINARY ENGINEERING PLANS
OPERATIONS & MAINTENANCE FACILITY SOUTH

STRUCTURAL
AERIAL GUIDEWAY - SUBSTRUCTURE
COLUMN SECTIONS

DRAWING No.: **STD-SHX001**
FACILITY ID: S08
SHEET No.:
REV:

02/25/24 | 11:02 PM | VALENALV
C:\PWWORKING\WEST01\D2780553\OMFS-STD-SHX001.DWG

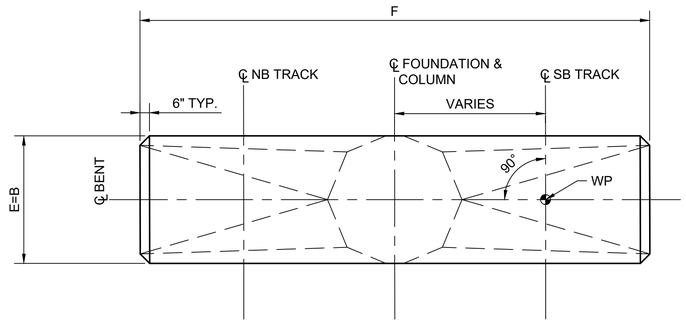

BENT PLAN
SCALE: 1/4" = 1'-0"

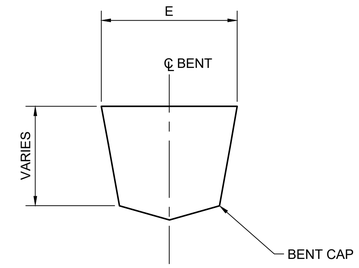

SECTION B -
SCALE: 1/4" = 1'-0"

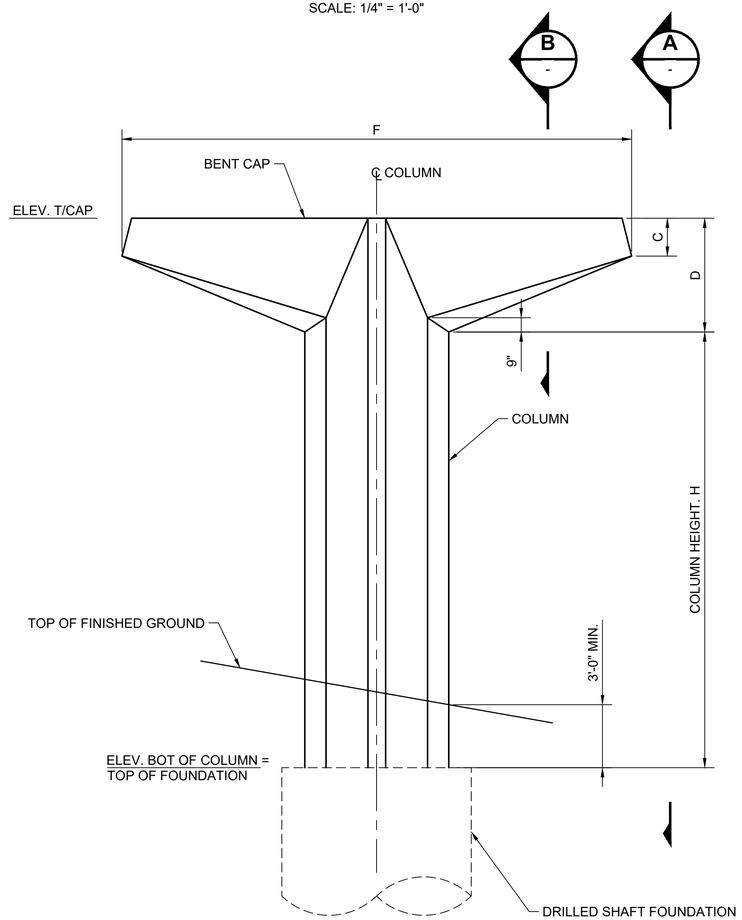

BENT ELEVATION 1 -
SCALE: 1/4" = 1'-0"

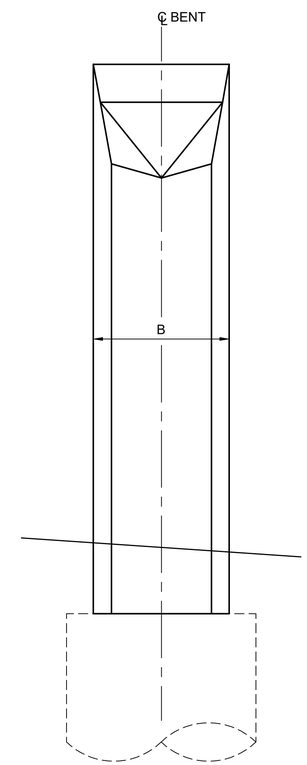

BENT SIDE ELEVATION A -
SCALE: 1/4" = 1'-0"

BENT TABLE			
C	D	E	F
2'-0"	6'-0'	7'-2"	28'-0"

NOT FOR CONSTRUCTION

Refer to the plan set COVER drawing for disclaimers regarding this drawing.

REFERENCE CONCEPT DRAWINGS

No.	DATE	DSN	CHK	APP	REVISION

DESIGNED BY: B. ROGERS
DRAWN BY: A. VALENCIA
CHECKED BY: J. MERTH
APPROVED BY: B. HARRIS

AHJ:

PRELIMINARY

SUBMITTED BY: PABLO LOPEZ-HILFIKER
DATE: 2/27/2024
REVIEWED BY:
DATE:

LINE IS 1" AT FULL SCALE

SCALE:
FILENAME: OMFS-STD-SBD002
CONTRACT No.: AE-0030-17
DATE: 2/27/2024

PACKAGE #

SOUND TRANSIT
PRELIMINARY ENGINEERING PLANS
OPERATIONS & MAINTENANCE FACILITY SOUTH

STRUCTURAL
AERIAL GUIDEWAY - SUBSTRUCTURE
TYPICAL SINGLE COLUMN BENT AT DOUBLE TRACK

DRAWING No.: **STD-SBD002**
FACILITY ID: S08
SHEET No.:
REV:

02/25/24 | 11:03 PM | VALENALV
C:\PWWORKING\WEST01\D2780553\OMFS-STD-SBD002.DWG

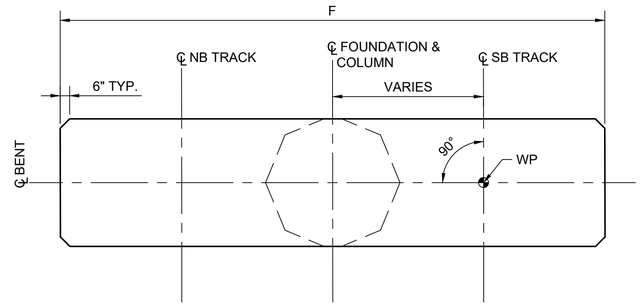

BENT PLAN
SCALE: 1/4" = 1'-0"

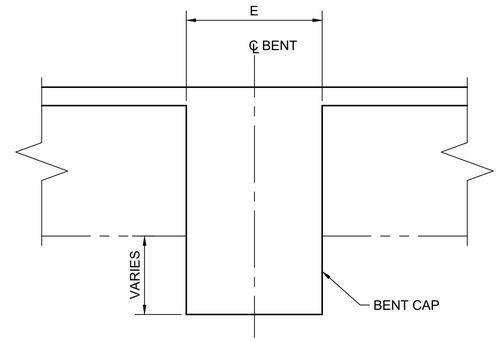

SECTION B
SCALE: 1/4" = 1'-0"

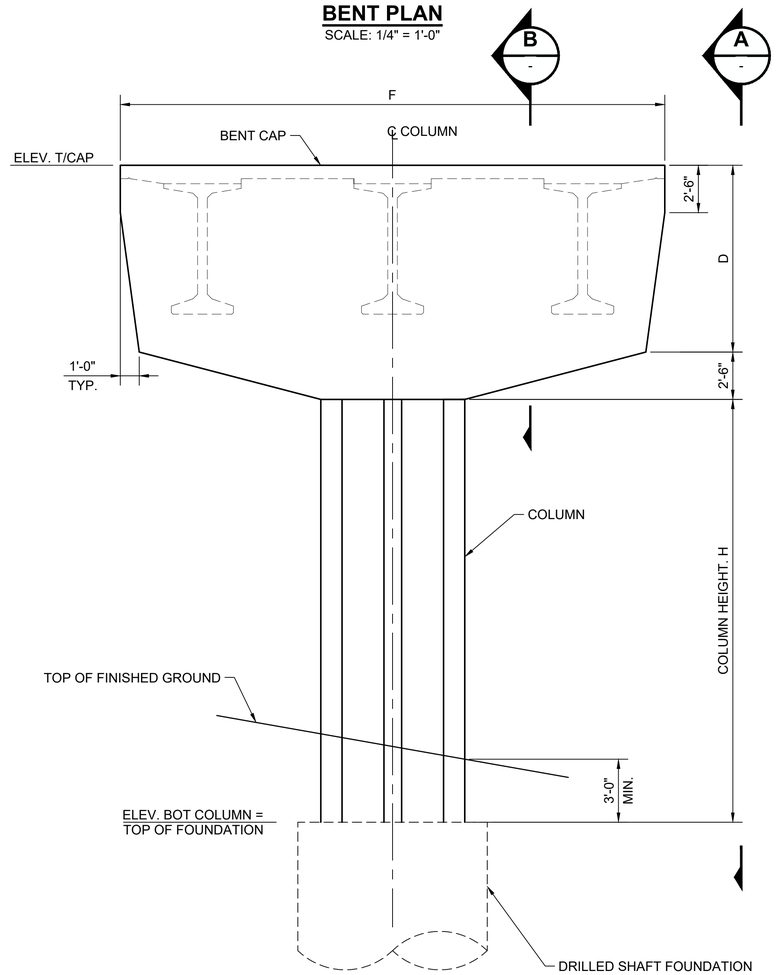

BENT ELEVATION 1
SCALE: 1/4" = 1'-0"

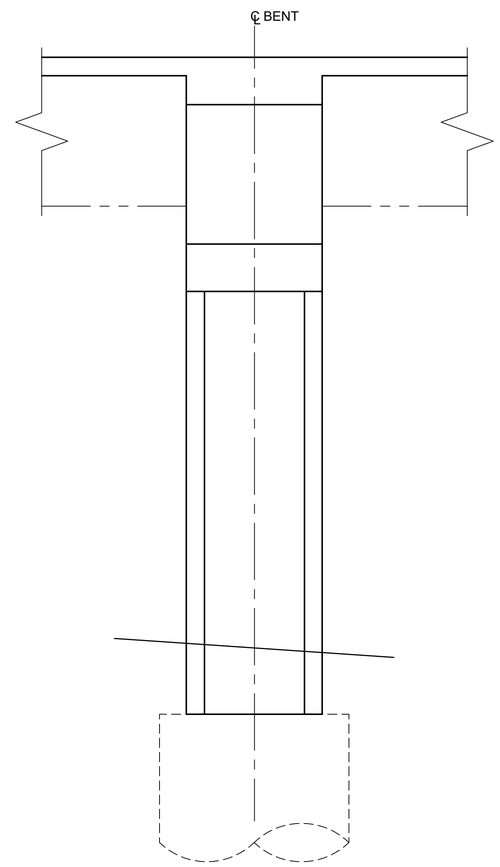

BENT SIDE ELEVATION A
SCALE: 1/4" = 1'-0"

BENT TABLE			
BENT ID	D	E	F
A7, A8	10'-3"	7'-2"	28'-9"
B21, B22	8'-1"	7'-2"	33'-11"

NOT FOR CONSTRUCTION

Refer to the plan set COVER drawing for disclaimers regarding this drawing.

REFERENCE CONCEPT DRAWINGS

No.	DATE	DSN	CHK	APP	REVISION

DESIGNED BY: B. ROGERS
DRAWN BY: A. VALENCIA
CHECKED BY: J. MERTH
APPROVED BY: B. HARRIS

AHJ:

PRELIMINARY

HDR

SUBMITTED BY: PABLO LOPEZ-HILFIKER
DATE: 2/27/2024
REVIEWED BY:
DATE:

LINE IS 1" AT FULL SCALE

SOUNDTRANSIT

PACKAGE #
SCALE:
FILENAME: OMFS-STD-SBD003
CONTRACT No.: AE-0030-17
DATE: 2/27/2024

SOUND TRANSIT
PRELIMINARY ENGINEERING PLANS
OPERATIONS & MAINTENANCE FACILITY SOUTH
STRUCTURAL
AERIAL GUIDEWAY - SUBSTRUCTURE
INTEGRAL SINGLE COLUMN BENT AT DOUBLE TRACK

DRAWING No.: **STD-SBD003**
FACILITY ID: S08
SHEET No.:
REV:

02/25/24 | 11:05 PM | VALENALV
C:\PWWORKING\WEST01\D2780553\OMFS-STD-SBD003.DWG

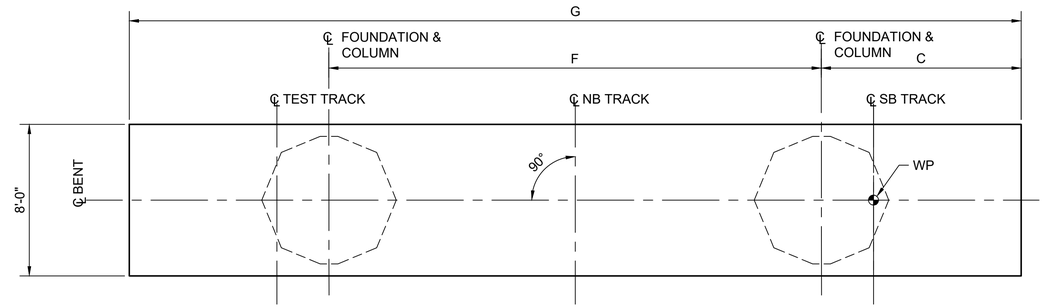

BENT PLAN
SCALE: 1/4" = 1'-0"

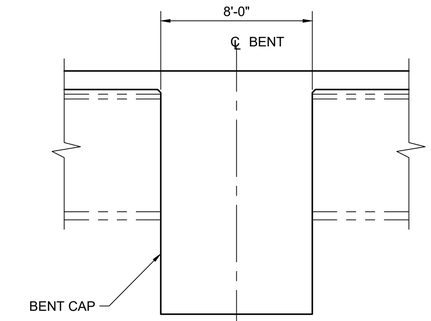

SECTION B -
SCALE: 1/4" = 1'-0"

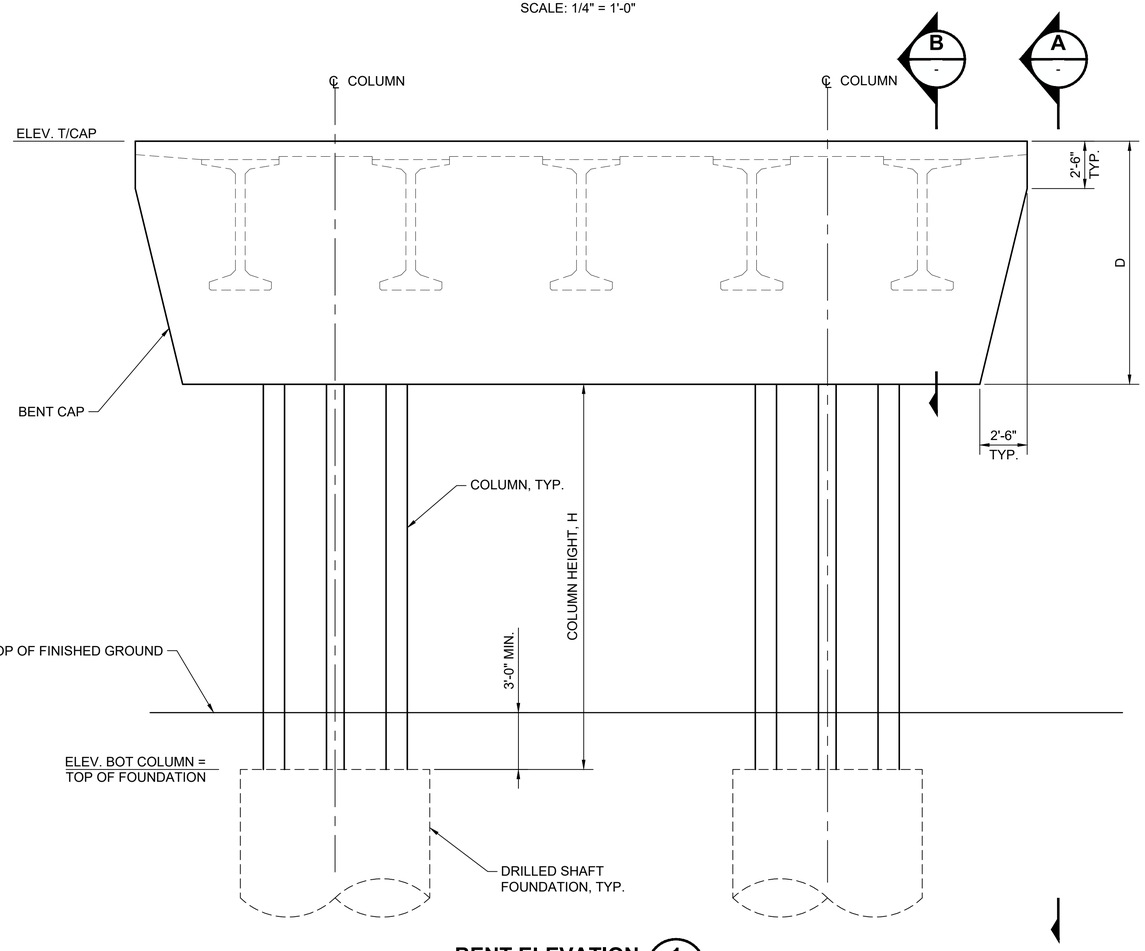

BENT ELEVATION 1 -
SCALE: 1/4" = 1'-0"

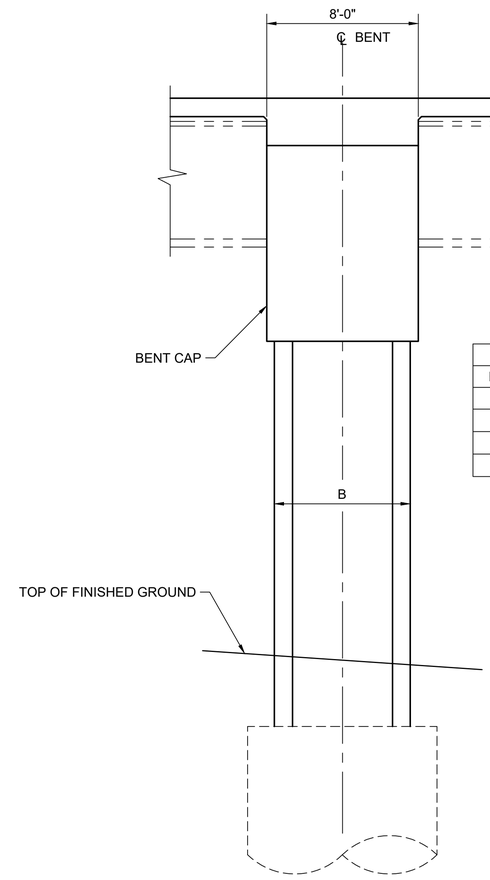

BENT SIDE ELEVATION A -
SCALE: 1/4" = 1'-0"

BENT TABLE					
BENT ID	B	C	D	F	G
B6, B7	6'-4"	9'-3"	12'-10"	26'-0"	47'-1"
B10	6'-4"	12'-1 ¾"	12'-10"	30'-6"	54'-9"
B12	6'-4"	10'-8"	12'-10"	33'-0"	54'-3"
B19	7'-2"	6'-8"	14'-1"	45'-6"	57'-8"

NOTE: GIRDER AND TRACK LAYOUT AND SPACING VARIES

NOT FOR CONSTRUCTION

Refer to the plan set COVER drawing for disclaimers regarding this drawing.

REFERENCE CONCEPT DRAWINGS

No.	DATE	DSN	CHK	APP	REVISION

DESIGNED BY: B. ROGERS
DRAWN BY: A. VALENCIA
CHECKED BY: J. MERTH
APPROVED BY: B. HARRIS

AHJ:

PRELIMINARY

HDR

SUBMITTED BY: PABLO LOPEZ-HILFIKER
DATE: 2/27/2024
REVIEWED BY:
DATE:

LINE IS 1" AT FULL SCALE

SOUNDTRANSIT

PACKAGE #
SCALE:
FILENAME: OMFS-STD-SBD004
CONTRACT No.: AE-0030-17
DATE: 2/27/2024

SOUND TRANSIT
PRELIMINARY ENGINEERING PLANS
OPERATIONS & MAINTENANCE FACILITY SOUTH

STRUCTURAL
AERIAL GUIDEWAY - SUBSTRUCTURE
INTEGRAL TWO-COLUMN BENT

DRAWING No.: **STD-SBD004**
FACILITY ID: S08
SHEET No.:
REV:

02/25/24 | 11:06 PM | VALENALV
C:\PWWORKING\WEST01\D2780553\OMFS-STD-SBD004.DWG

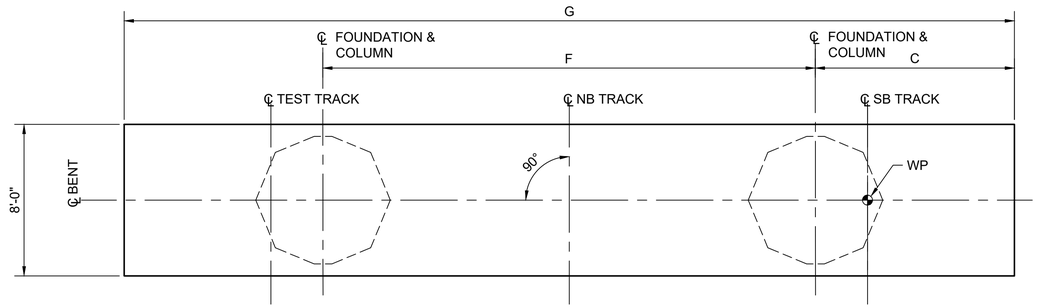

BENT PLAN
SCALE: 1/4" = 1'-0"

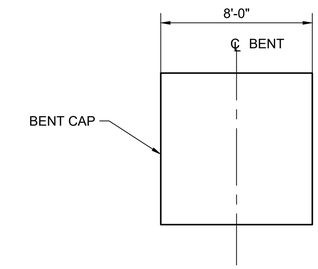

SECTION B -
SCALE: 1/4" = 1'-0"

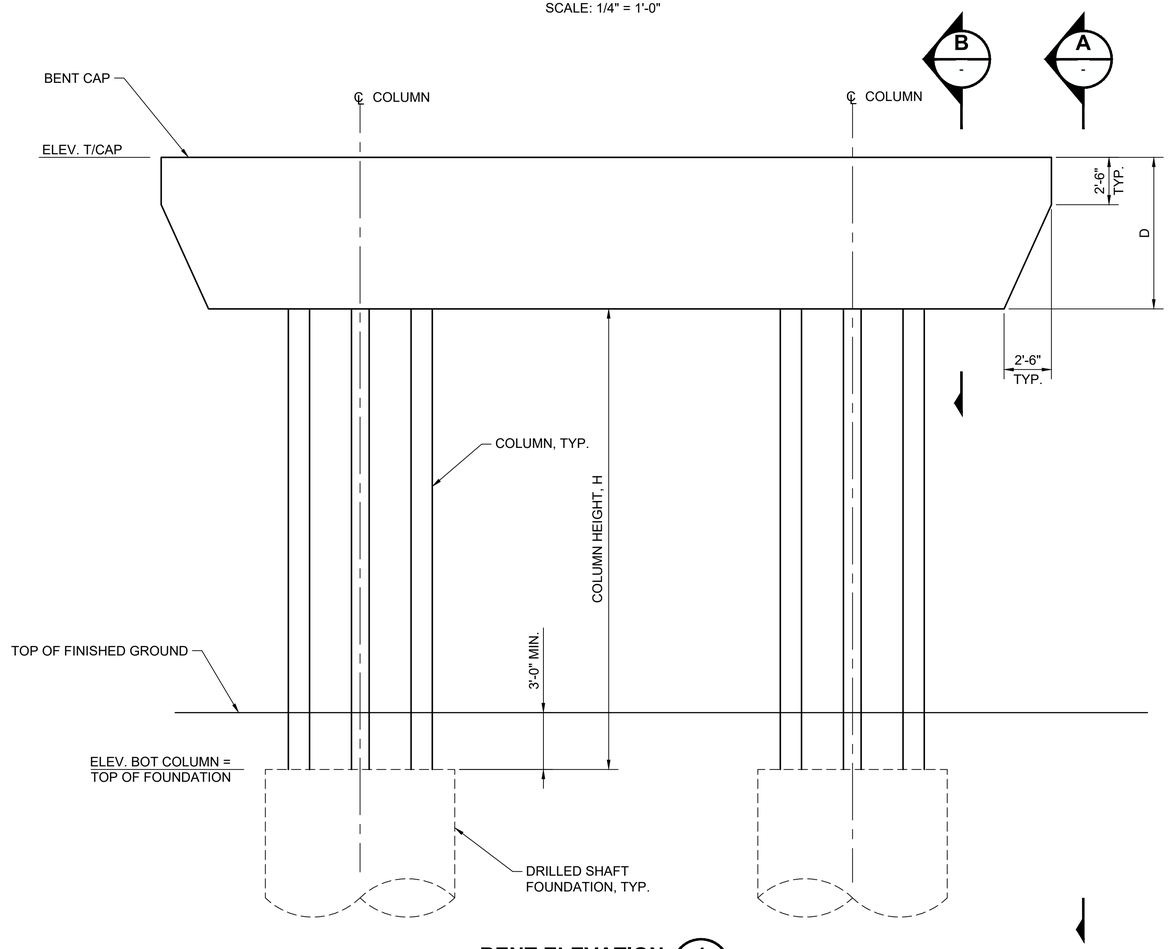

BENT ELEVATION 1 -
SCALE: 1/4" = 1'-0"

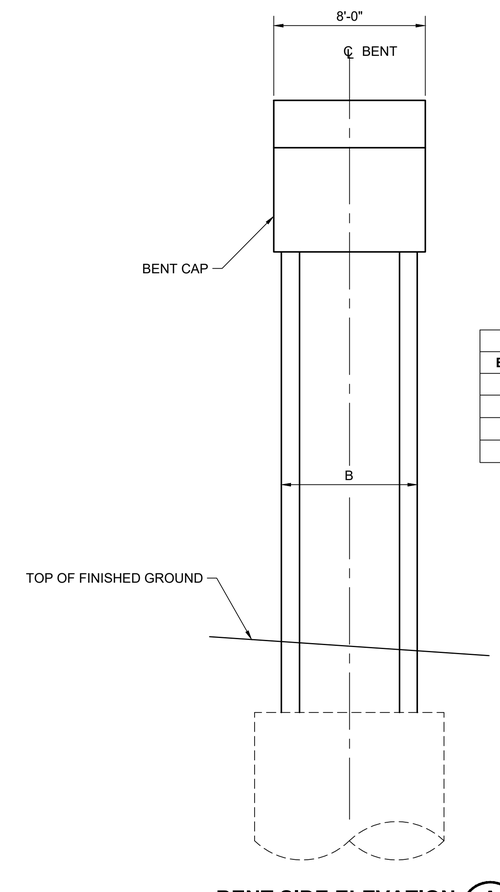

BENT SIDE ELEVATION A -
SCALE: 1/4" = 1'-0"

BENT TABLE					
BENT ID	B	C	D	F	G
B4	7'-2"	11'-1"	9'-0"	35'-0"	57'-0"
B8	6'-4"	11'-6"	8'-0"	26'-6"	49'-0"
B11	6'-4"	11'-10"	8'-0"	26'-0"	47'-0"
B18	6'-4"	9'-0"	9'-0"	36'-0"	57'-0"

NOTE: GIRDER AND TRACK LAYOUT SPACING VARIES

NOT FOR CONSTRUCTION

Refer to the plan set COVER drawing for disclaimers regarding this drawing.

REFERENCE CONCEPT DRAWINGS

No.	DATE	DSN	CHK	APP	REVISION

DESIGNED BY: B. ROGERS
DRAWN BY: A. VALENCIA
CHECKED BY: J. MERTH
APPROVED BY: B. HARRIS

AHJ:

PRELIMINARY

HDR

SUBMITTED BY: PABLO LOPEZ-HILFIKER
DATE: 2/27/2024
REVIEWED BY:
DATE:

LINE IS 1" AT FULL SCALE

SOUNDTRANSIT

PACKAGE #
SCALE:
FILENAME: OMFS-STD-SBD005
CONTRACT No.: AE-0030-17
DATE: 2/27/2024

SOUND TRANSIT
PRELIMINARY ENGINEERING PLANS
OPERATIONS & MAINTENANCE FACILITY SOUTH
STRUCTURAL
AERIAL GUIDEWAY - SUBSTRUCTURE
UNDERSLUNG TWO-COLUMN BENT

DRAWING No.: **STD-SBD005**
FACILITY ID: S08
SHEET No.:
REV:

02/25/24 | 11:07 PM | VALENALV
C:\PWWORKING\WEST01\D2780553\OMFS-STD-SBD005.DWG

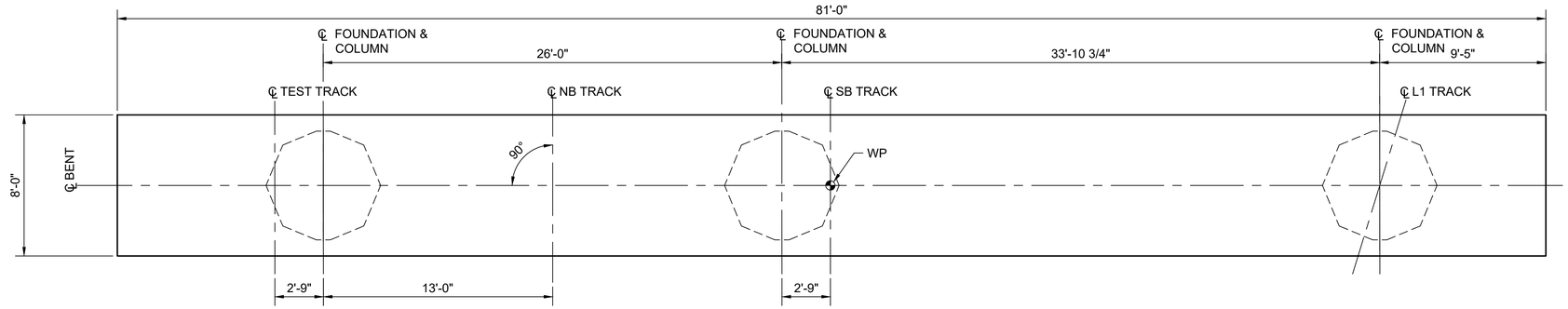

BENT PLAN
SCALE: 1/4" = 1'-0"

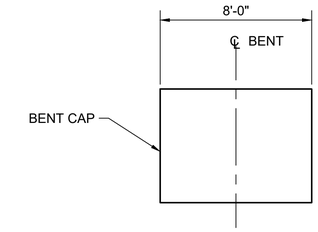

SECTION B
SCALE: 1/4" = 1'-0"

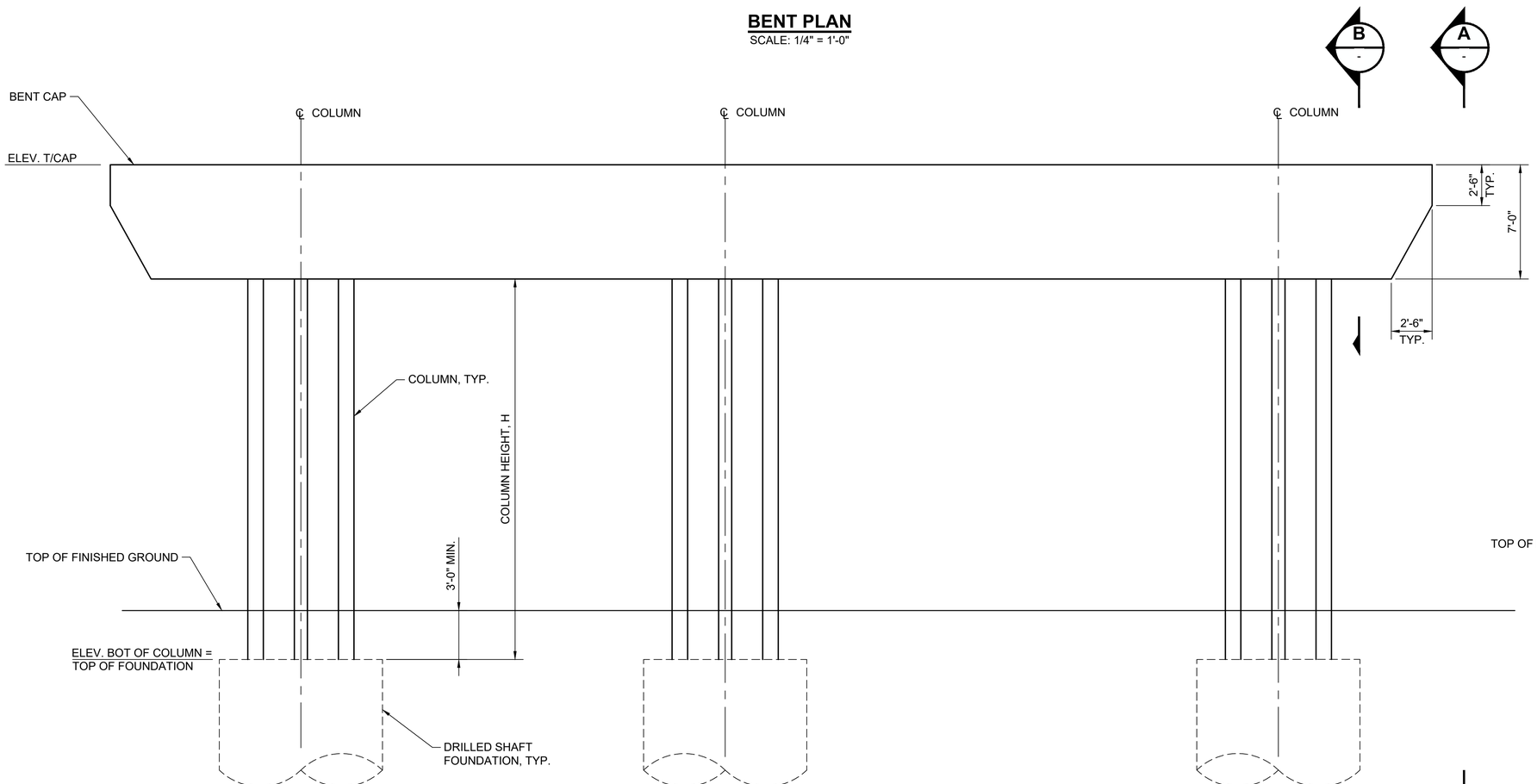

BENT ELEVATION 1
SCALE: 1/4" = 1'-0"

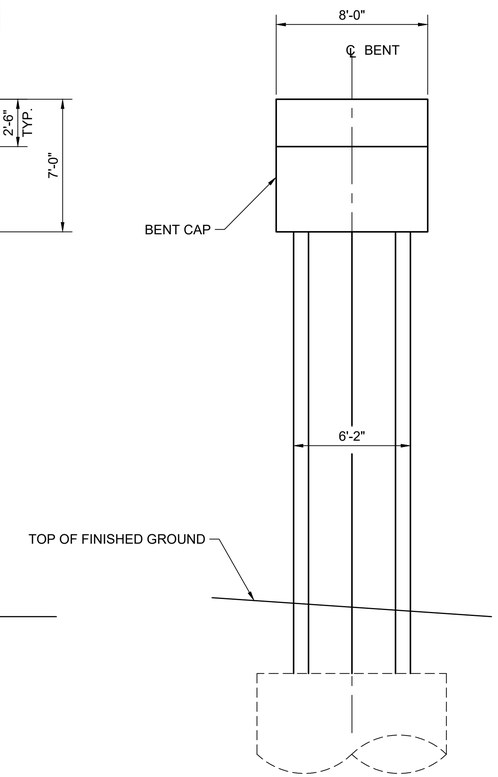

BENT SIDE ELEVATION A
SCALE: 1/4" = 1'-0"

NOT FOR CONSTRUCTION

Refer to the plan set COVER drawing for disclaimers regarding this drawing.

REFERENCE CONCEPT DRAWINGS

No.	DATE	DSN	CHK	APP	REVISION

DESIGNED BY: B. ROGERS
DRAWN BY: A. VALENCIA
CHECKED BY: J. MERTH
APPROVED BY: B. HARRIS

AHJ:

PRELIMINARY

SUBMITTED BY: PABLO LOPEZ-HILFIKER
DATE: 2/27/2024
REVIEWED BY:
DATE:

LINE IS 1" AT FULL SCALE

PACKAGE #
SCALE:
FILENAME: OMFS-STD-SBD006
CONTRACT No.: AE-0030-17
DATE: 2/27/2024

SOUND TRANSIT
PRELIMINARY ENGINEERING PLANS
OPERATIONS & MAINTENANCE FACILITY SOUTH
STRUCTURAL
AERIAL GUIDEWAY - SUBSTRUCTURE
UNDERSLUNG THREE-COLUMN BENT WITH LEAD TRACK

DRAWING No.: **STD-SBD006**
FACILITY ID: S08
SHEET No.:
REV:

02/25/24 | 11:08 PM | VALENALV
C:\PWWORKING\WEST01\D2780553\OMFS-STD-SBD006.DWG

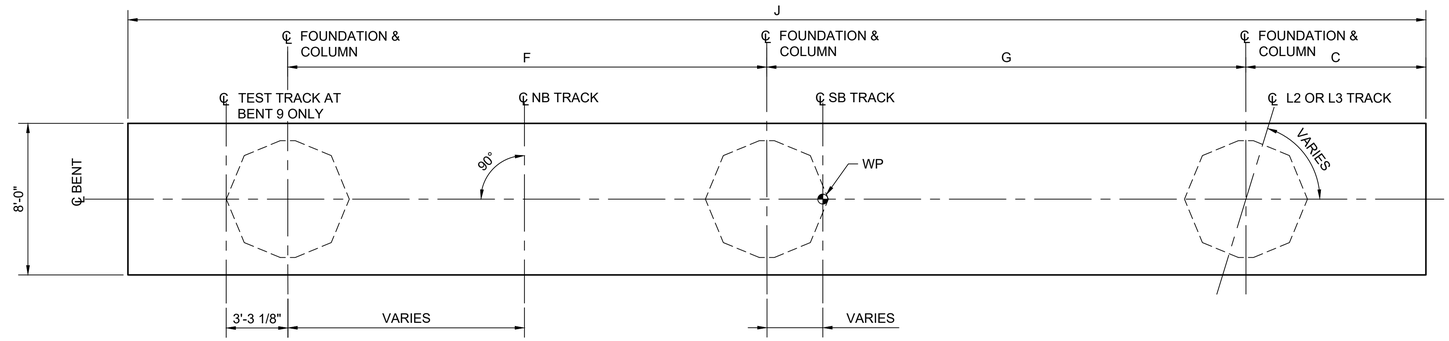

BENT PLAN
SCALE: 1/4" = 1'-0"

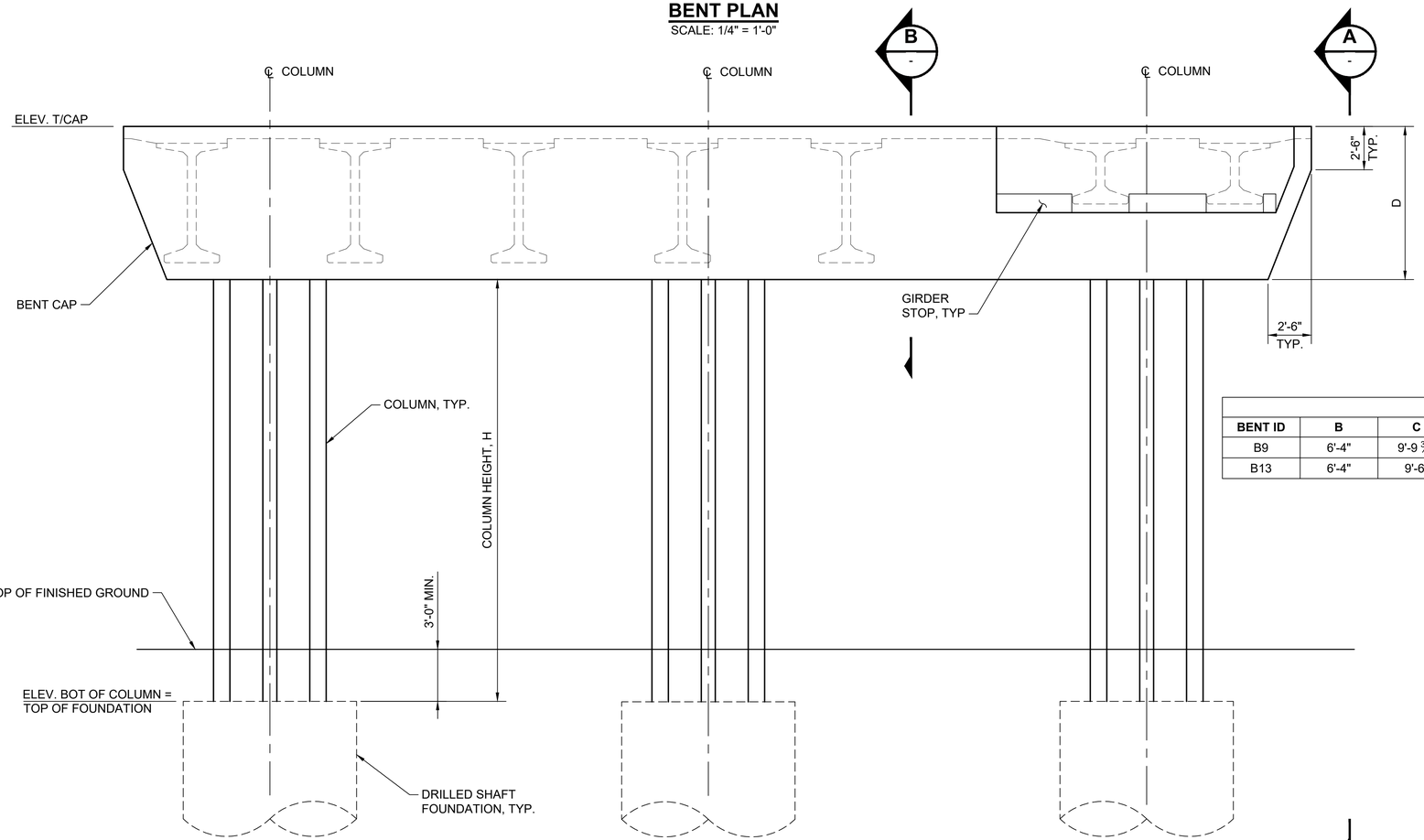

BENT ELEVATION 1
SCALE: 1/4" = 1'-0"

BENT TABLE						
BENT ID	B	C	D	F	G	J
B9	6'-4"	9'-9 3/8"	8'-10"	27'-2 5/8"	27'-5 3/8"	74'-2 1/8"
B13	6'-4"	9'-6"	8'-10"	25'-3 1/2"	25'-3 1/2"	68'-6 1/4"

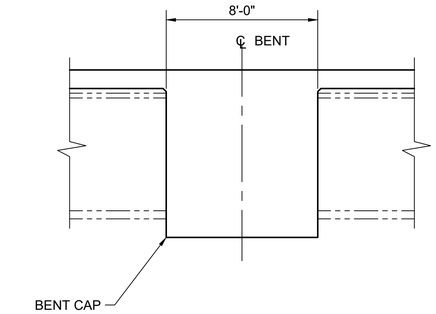

SECTION B
SCALE: 1/4" = 1'-0"

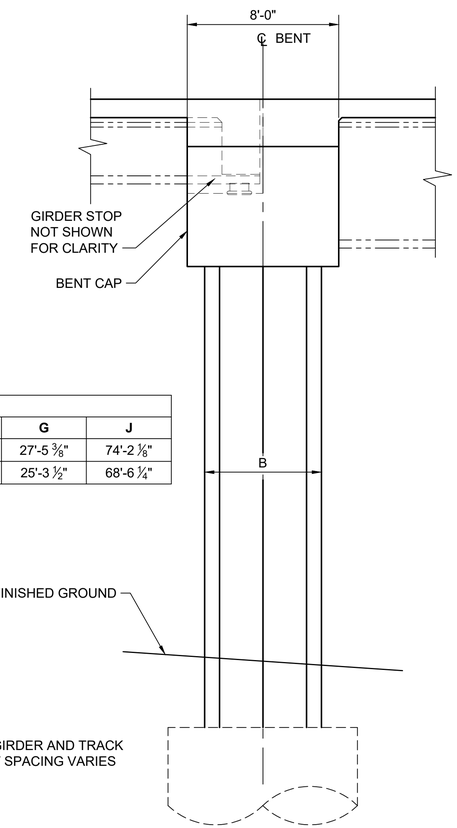

BENT SIDE ELEVATION A
SCALE: 1/4" = 1'-0"

NOT FOR CONSTRUCTION

Refer to the plan set COVER drawing for disclaimers regarding this drawing.

REFERENCE CONCEPT DRAWINGS

No.	DATE	DSN	CHK	APP	REVISION

DESIGNED BY: B. ROGERS
DRAWN BY: A. VALENCIA
CHECKED BY: J. MERTH
APPROVED BY: B. HARRIS

AHJ:

PRELIMINARY

HDR

SUBMITTED BY: PABLO LOPEZ-HILFIKER
DATE: 2/27/2024
REVIEWED BY:
DATE:

LINE IS 1" AT FULL SCALE

SOUNDTRANSIT

PACKAGE #
SCALE:
FILENAME: OMFS-STD-SBD007
CONTRACT No.: AE-0030-17
DATE: 2/27/2024

SOUND TRANSIT
PRELIMINARY ENGINEERING PLANS
OPERATIONS & MAINTENANCE FACILITY SOUTH

STRUCTURAL
AERIAL GUIDEWAY - SUBSTRUCTURE
INTEGRAL THREE-COLUMN BENT WITH LEAD TRACK

DRAWING No.: STD-SBD007
FACILITY ID: S08
SHEET No.:
REV:

02/25/24 | 11:10 PM | VALENALV
C:\PWWORKING\WEST01\D2780553\OMFS-STD-SBD007.DWG

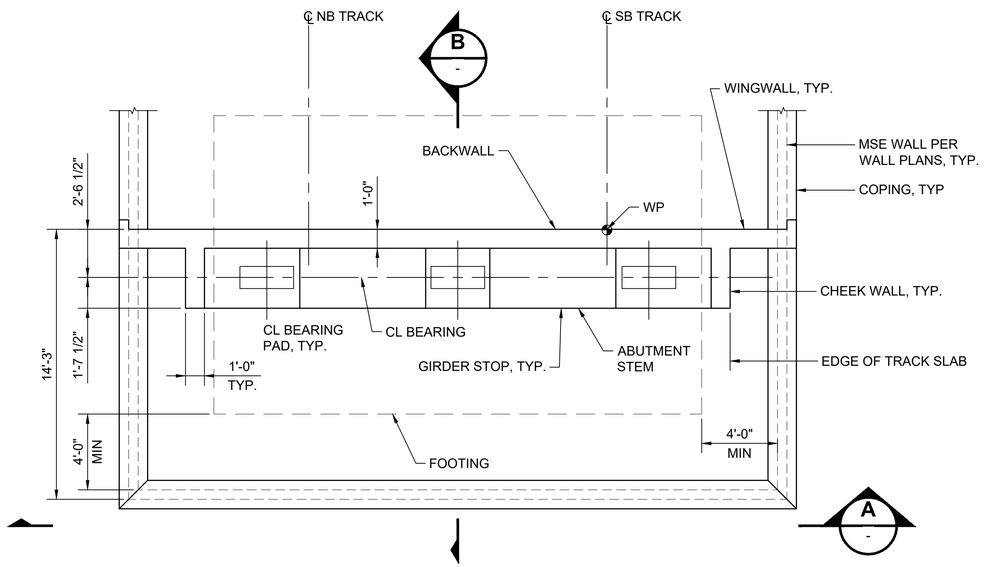

PLAN - ABUTMENT

SCALE: 1/4" = 1'-0"

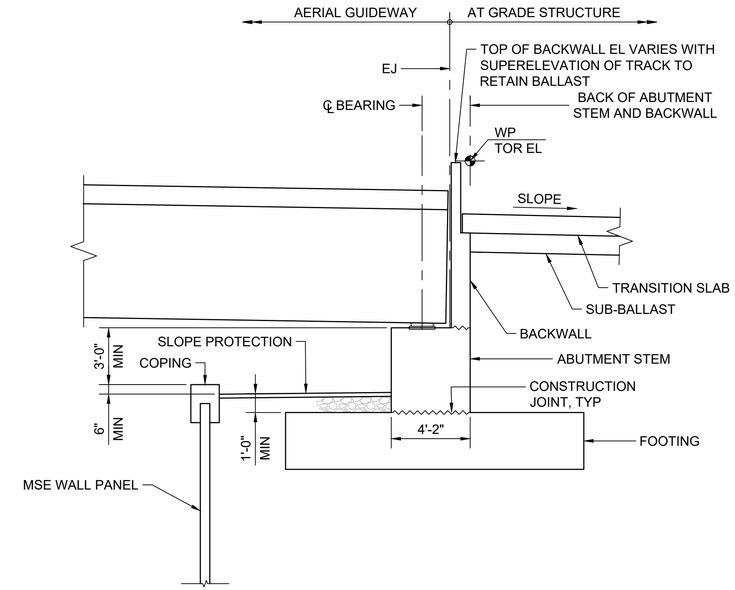

SECTION B

SCALE: 1/4" = 1'-0"

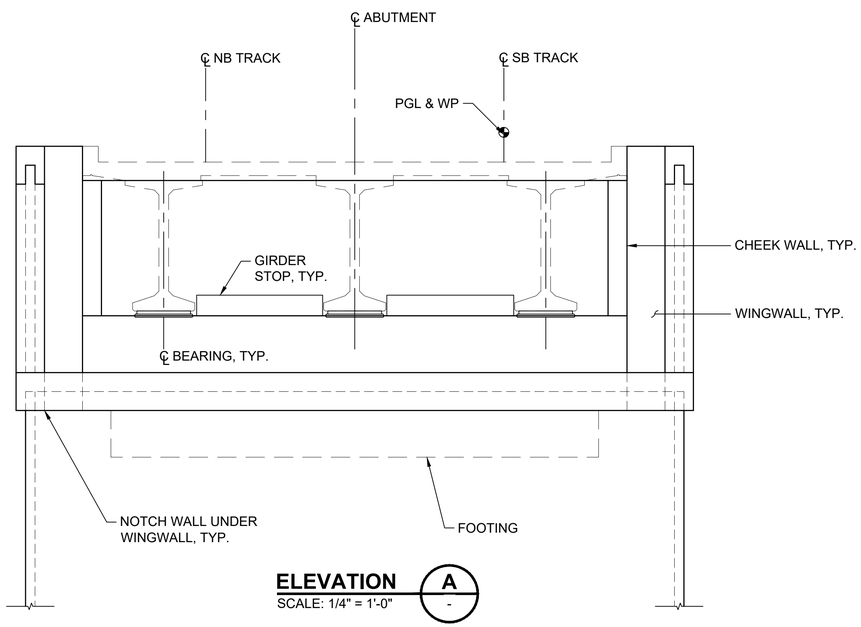

ELEVATION A

SCALE: 1/4" = 1'-0"

(LOOKING UPSTATION)

NOT FOR CONSTRUCTION

Refer to the plan set COVER drawing for disclaimers regarding this drawing.

REFERENCE CONCEPT DRAWINGS

No.	DATE	DSN	CHK	APP	REVISION

DESIGNED BY: B. ROGERS
DRAWN BY: A. VALENCIA
CHECKED BY: J. MERTH
APPROVED BY: B. HARRIS

AHJ:

PRELIMINARY

SUBMITTED BY: PABLO LOPEZ-HILFIKER
DATE: 2/27/2024
REVIEWED BY:
DATE:

LINE IS 1" AT FULL SCALE

PACKAGE #

SCALE:
FILENAME: OMFS-STD-SBD008
CONTRACT No.: AE-0030-17
DATE: 2/27/2024

SOUND TRANSIT
PRELIMINARY ENGINEERING PLANS
OPERATIONS & MAINTENANCE FACILITY SOUTH

STRUCTURAL
AERIAL GUIDEWAY - SUBSTRUCTURE
DOUBLE-TRACK ABUTMENT ON SPREAD FOOTING ON MSE

DRAWING No.: **STD-SBD008**
FACILITY ID: S08
SHEET No.:
REV:

02/25/24 | 11:11 PM | VALENALV
C:\PWWORKING\WEST01\D2780553\OMFS-STD-SBD008.DWG

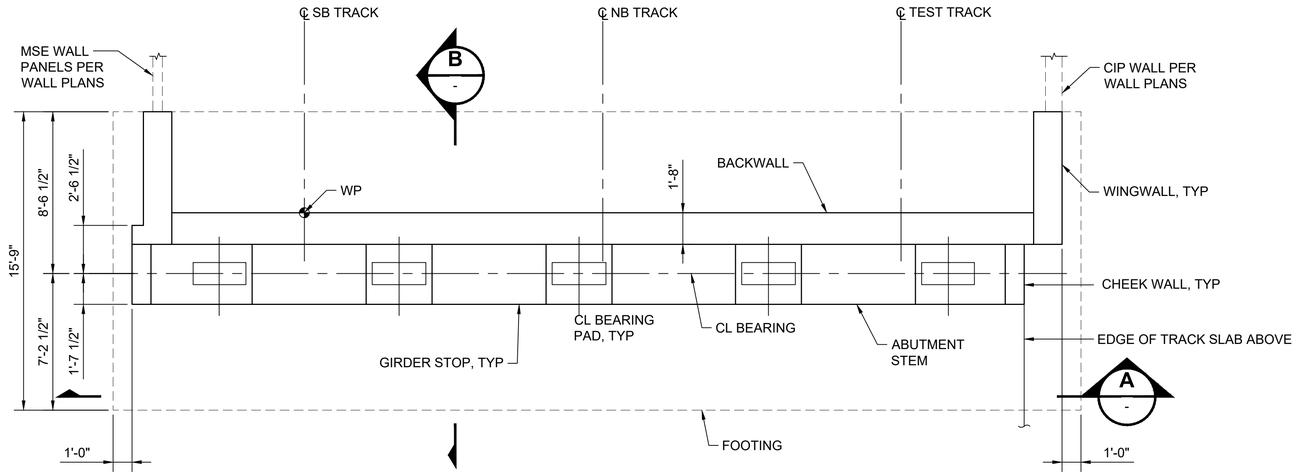

PLAN - ABUTMENT

SCALE: 1/4" = 1'-0"

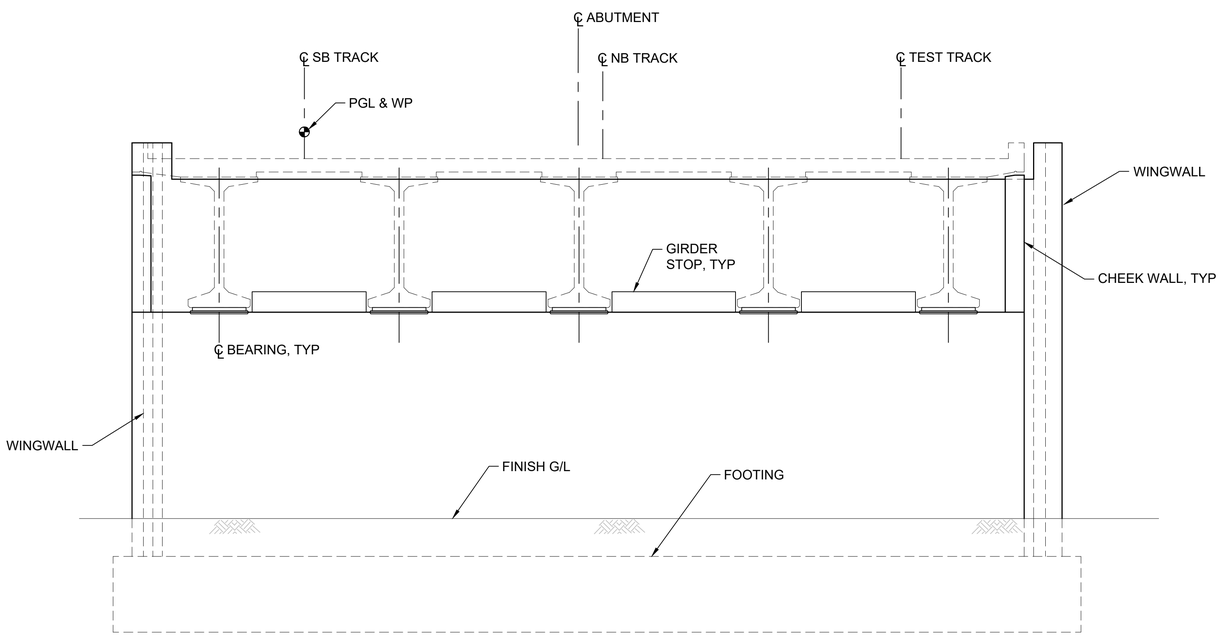

ELEVATION A

SCALE: 1/4" = 1'-0"

(LOOKING DOWN STATION)

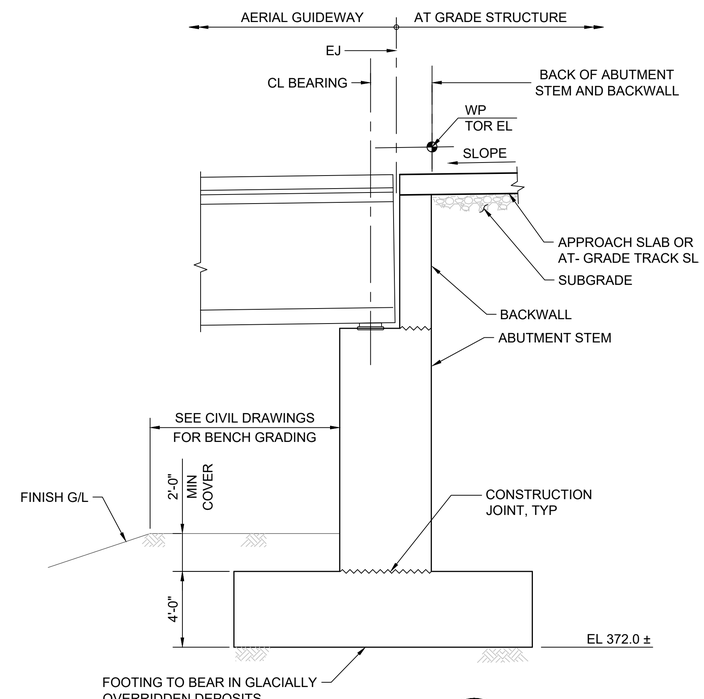

SECTION B

SCALE: 1/4" = 1'-0"

NOT FOR CONSTRUCTION

Refer to the plan set COVER drawing for disclaimers regarding this drawing.

AHJ:

PACKAGE #

REFERENCE CONCEPT DRAWINGS

No.	DATE	DSN	CHK	APP	REVISION

DESIGNED BY: B. ROGERS
DRAWN BY: A. VALENCIA
CHECKED BY: J. MERTH
APPROVED BY: B. HARRIS

PRELIMINARY

HDR

SUBMITTED BY: PABLO LOPEZ-HILFIKER
DATE: 2/27/2024
REVIEWED BY:
DATE:

LINE IS 1" AT FULL SCALE

SOUNDTRANSIT

SCALE:
FILENAME: OMFS-STD-SBD010
CONTRACT No.: AE-0030-17
DATE: 2/27/2024

SOUND TRANSIT
PRELIMINARY ENGINEERING PLANS
OPERATIONS & MAINTENANCE FACILITY SOUTH

STRUCTURAL
AERIAL GUIDEWAY - SUBSTRUCTURE
THREE-TRACK ABUTMENT ON SPREAD FOOTING

DRAWING No.: **STD-SBD010**
FACILITY ID: S08
SHEET No.:
REV:

02/25/24 | 11:12 PM | VALENALV
C:\PWWORKING\WEST01\D2780553\OMFS-STD-SBD010.DWG

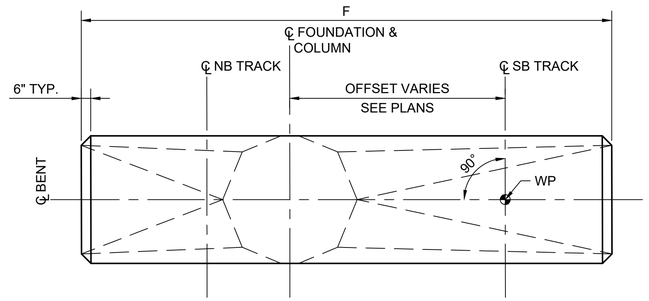

BENT PLAN

SCALE: 1/4" = 1'-0"
(OFFSET TOWARDS NB TRACK SHOWN, OFFSET TOWARDS SB TRACK SIMILAR)

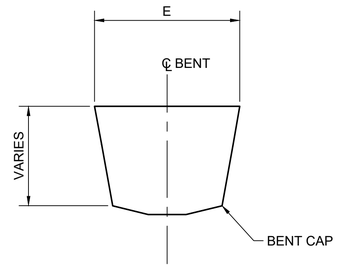

SECTION B

SCALE: 1/4" = 1'-0"

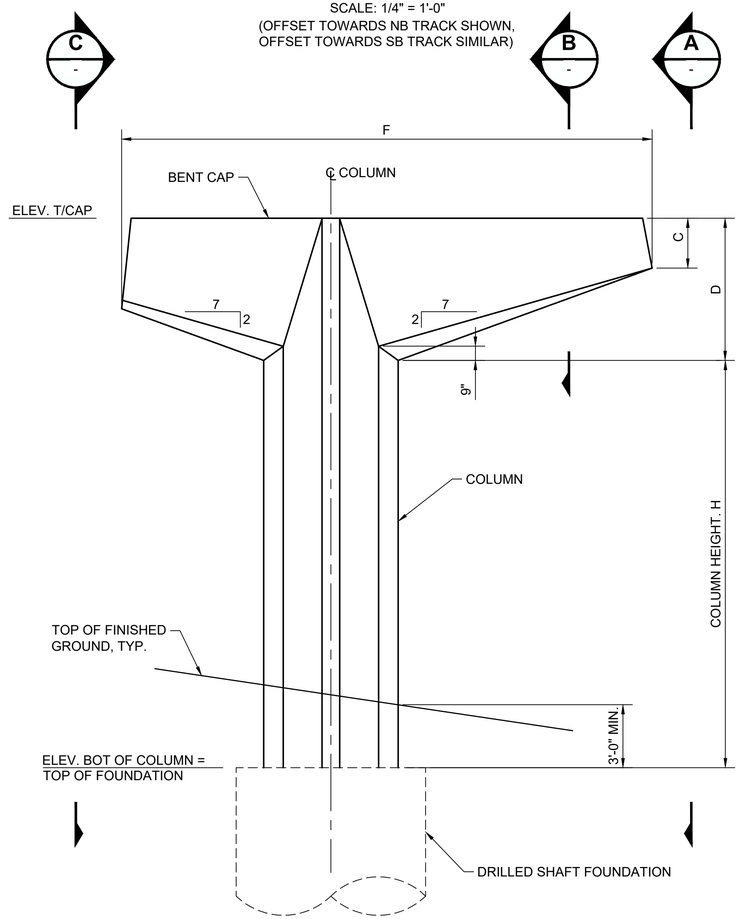

BENT ELEVATION 1

SCALE: 1/4" = 1'-0"

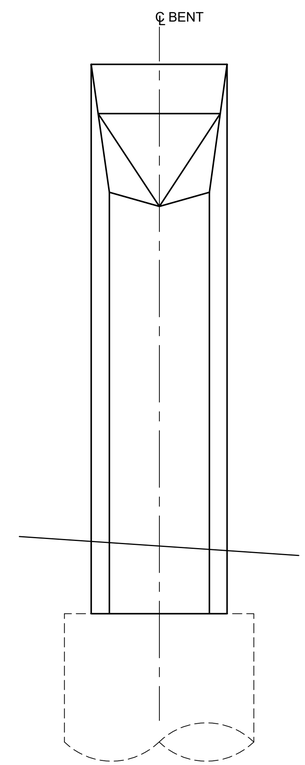

BENT SIDE ELEVATION A

SCALE: 1/4" = 1'-0"

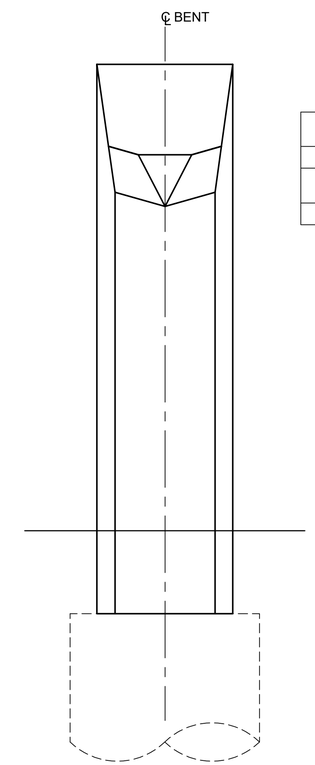

BENT SIDE ELEVATION C

SCALE: 1/4" = 1'-0"

BENT TABLE				
BENT ID	C	D	E	F
A1, A5		7'-6"	SEE COL SCH	28'-0"

NOT FOR CONSTRUCTION

Refer to the plan set COVER drawing for disclaimers regarding this drawing.

REFERENCE CONCEPT DRAWINGS

No.	DATE	DSN	CHK	APP	REVISION

DESIGNED BY: B. HARRIS
DRAWN BY: A. VALENCIA
CHECKED BY: J. MERTH
APPROVED BY: B. HARRIS

AHJ:

PRELIMINARY

HDR

SUBMITTED BY: PABLO LOPEZ-HILFIKER
DATE: 2/27/2024
REVIEWED BY:
DATE:

LINE IS 1" AT FULL SCALE

SOUNDTRANSIT

PACKAGE #

SCALE:
FILENAME: OMFS-STD-SBD011
CONTRACT No.: AE-0030-17
DATE: 2/27/2024

SOUND TRANSIT
PRELIMINARY ENGINEERING PLANS
OPERATIONS & MAINTENANCE FACILITY SOUTH

STRUCTURAL
AERIAL GUIDEWAY - SUBSTRUCTURE
TYPICAL OFFSET BENT AT DOUBLE TRACK

DRAWING No.: **STD-SBD011**
FACILITY ID: S08
SHEET No.:
REV:

02/25/24 | 11:14 PM | VALENALV
C:\PWWORKING\WEST01\D2780553\OMFS-STD-SBD011.DWG

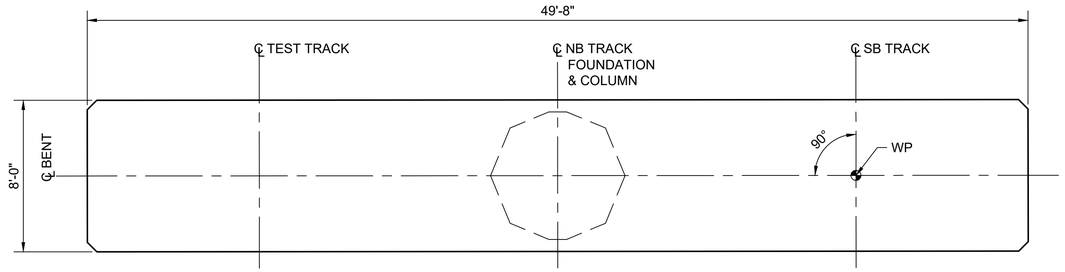

BENT PLAN
SCALE: 1/4" = 1'-0"

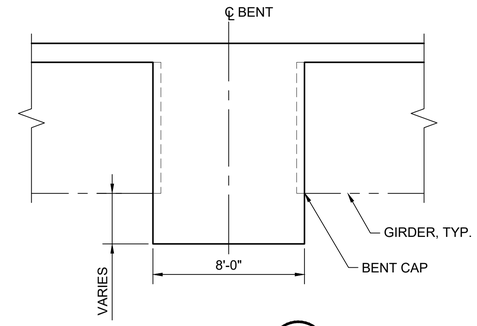

SECTION B
SCALE: 1/4" = 1'-0"

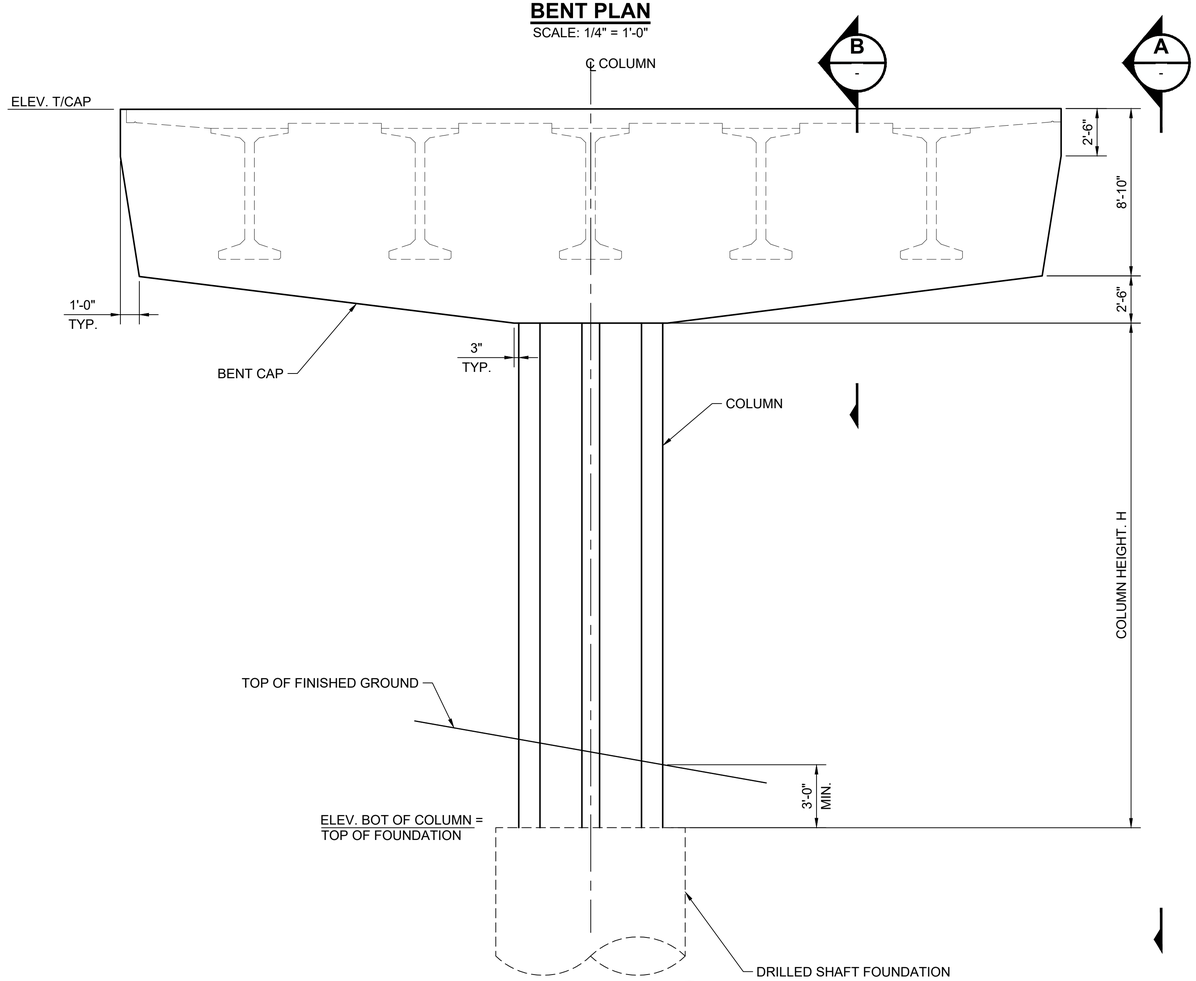

BENT ELEVATION 1
SCALE: 1/4" = 1'-0"

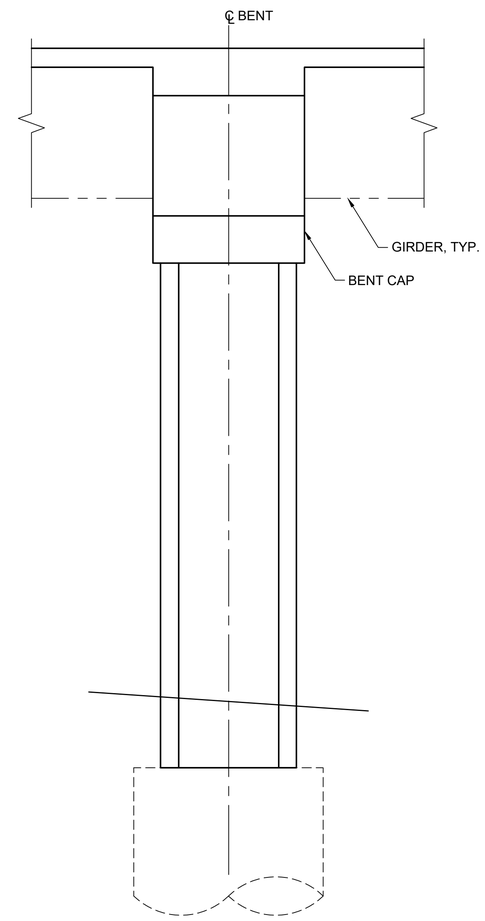

BENT SIDE ELEVATION A
SCALE: 1/4" = 1'-0"

NOT FOR CONSTRUCTION

Refer to the plan set COVER drawing for disclaimers regarding this drawing.

REFERENCE CONCEPT DRAWINGS

No.	DATE	DSN	CHK	APP	REVISION

DESIGNED BY: B. HARRIS
DRAWN BY: A. VALENCIA
CHECKED BY: J. MERTH
APPROVED BY: B. HARRIS

AHJ:

PRELIMINARY

HDR

SUBMITTED BY: PABLO LOPEZ-HILFIKER
DATE: 2/27/2024
REVIEWED BY:
DATE:

LINE IS 1" AT FULL SCALE

SOUNDTRANSIT

PACKAGE #

SCALE:
FILENAME: OMFS-STD-SBD012
CONTRACT No.: AE-0030-17
DATE: 2/27/2024

SOUND TRANSIT
PRELIMINARY ENGINEERING PLANS
OPERATIONS & MAINTENANCE FACILITY SOUTH

STRUCTURAL
AERIAL GUIDEWAY - SUBSTRUCTURE
INTEGRAL HAMMERHEAD BENT AT 3-TRACK

DRAWING No.: **STD-SBD012**
FACILITY ID: S08
SHEET No.:
REV:

02/25/24 | 11:15 PM | VALENALV
C:\PWWORKING\WEST01\D2780553\OMFS-STD-SBD012.DWG

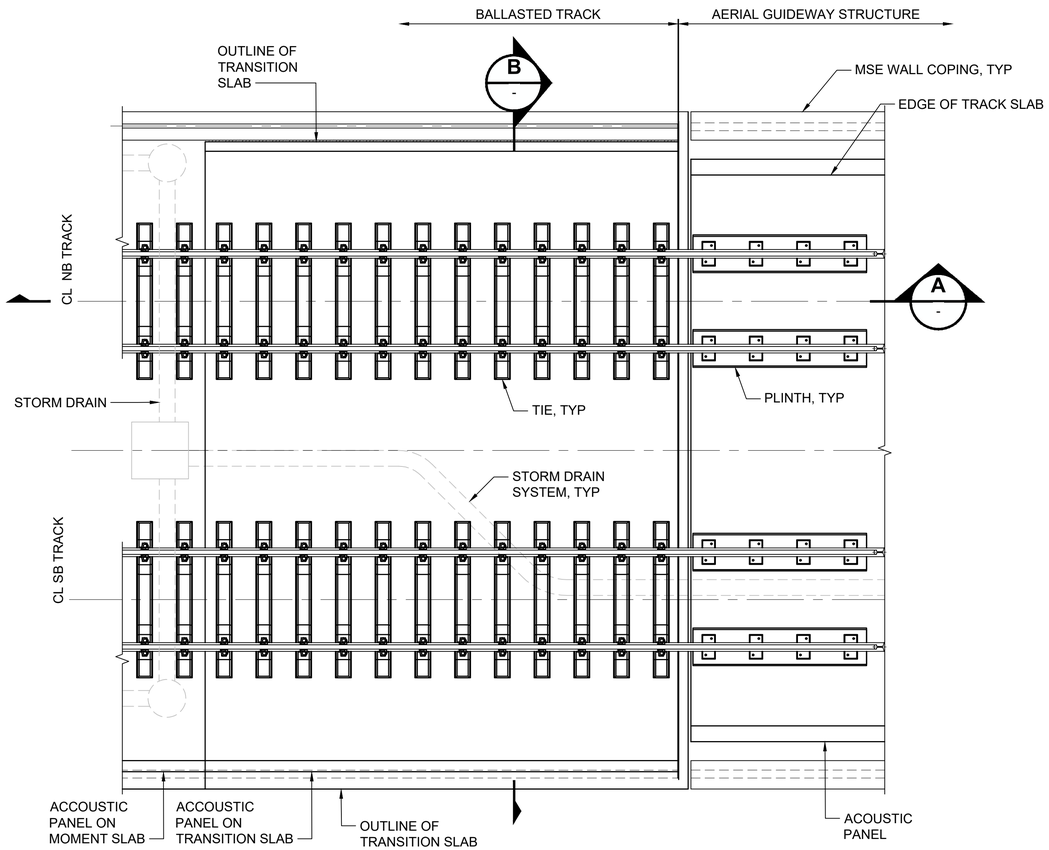

TRACK TRANSITION SLAB PLAN (DOUBLE TRACK SECTION SHOWN)

SCALE: 3/8" = 1'-0"

NOTES:

1. GEOMETRY SHOWN FOR TYPICAL DOUBLE TRACK TRANSITION SLAB. SINGLE AND TRIPLE TRACK CONFIGURATIONS ARE SIMILAR.
2. FOR ABUTMENT DETAILS, SEE DRAWINGS STD-SBD008, STD-SBD010, M08-SBD003, AND M08-SBD004.

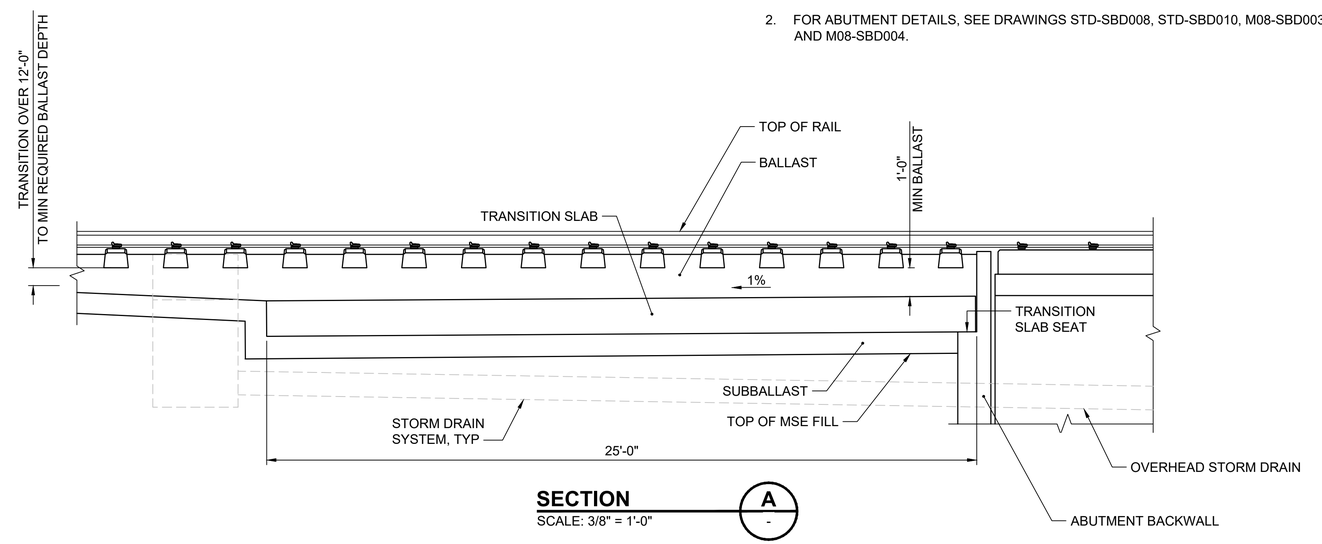

SECTION A

SCALE: 3/8" = 1'-0"

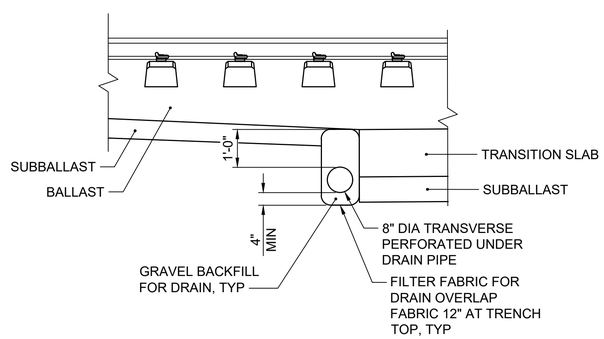

ALTERNATE DRAINAGE DETAIL

SCALE: 1/2" = 1'-0"

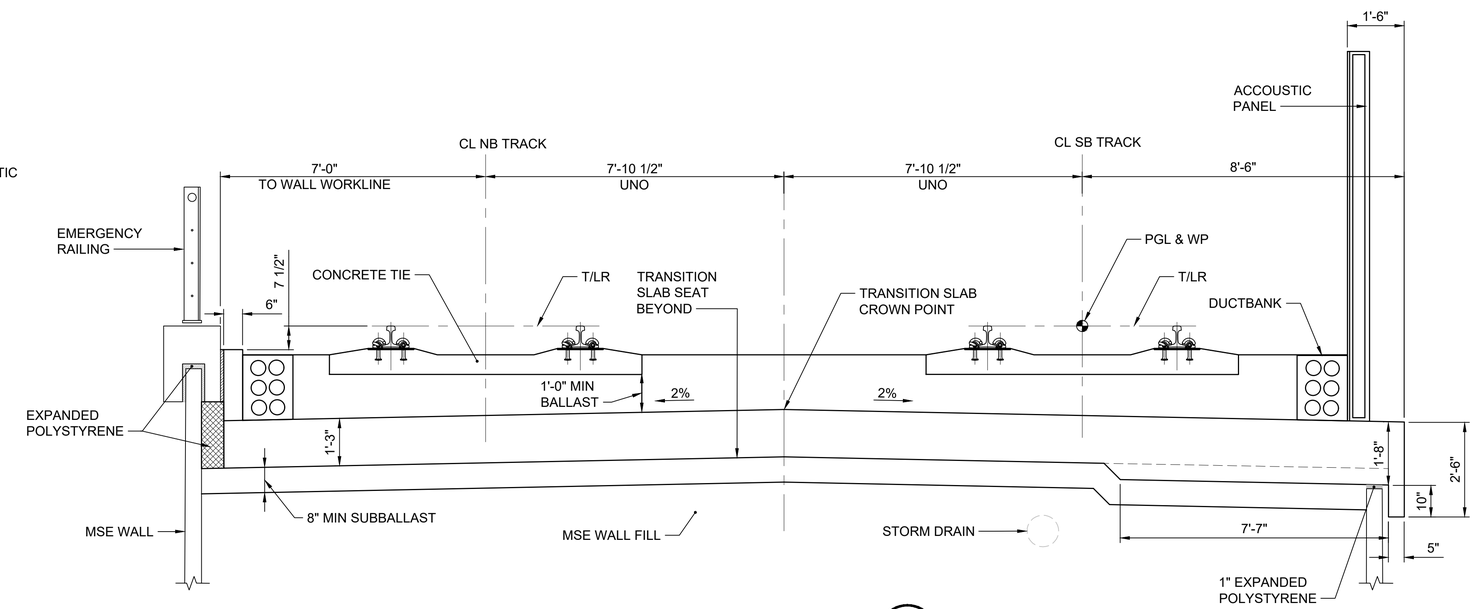

SECTION B

SCALE: 1" = 10'

ACCOUSTIC PANEL LOCATIONS ARE STRUCTURE SPECIFIC. IN THE ABSENCE OF ACCOUSTIC PANELS SECTION B IS SYMMETRIC ABOUT CENTERLINE.

NOT FOR CONSTRUCTION

Refer to the plan set COVER drawing for disclaimers regarding this drawing.

REFERENCE CONCEPT DRAWINGS

No.	DATE	DSN	CHK	APP	REVISION

DESIGNED BY: B. ROGERS
DRAWN BY: A. VALENCIA
CHECKED BY: J. MERTH
APPROVED BY: B. HARRIS

AHJ:

PRELIMINARY

SUBMITTED BY: PABLO LOPEZ-HILFIKER
DATE: 2/27/2024
REVIEWED BY:
DATE:

LINE IS 1" AT FULL SCALE

SCALE:
FILENAME: OMFS-STD-SED011
CONTRACT No.: AE-0030-17
DATE: 2/27/2024

PACKAGE #

SOUND TRANSIT
PRELIMINARY ENGINEERING PLANS
OPERATIONS & MAINTENANCE FACILITY SOUTH

STRUCTURAL
AERIAL GUIDEWAY - SUBSTRUCTURE
TRANSITION SLAB DETAILS

DRAWING No.: STD-SED011
FACILITY ID: S08
SHEET No.:
REV:

02/25/24 | 11:21 PM | VALENALV
C:\PWWORKING\WEST01\D2780553\OMFS-STD-SED011.DWG

SUPERSTRUCTURE SCHEDULE

SPAN	BACK STATION PIER	AHEAD STATION PIER	SUPERSTRUCTURE TYPE	PRECAST GIRDER SIZE	NOTES
A00	G29	A1	DT	WF74G	
A1	A1	A2	DT	WF74G	
A2	A2	A3	DT	WF74G	
A3	A3	A4	DT	WF74G	
A4	A4	A5	DT	WF74G	
A5	A5	A6	DT	WF74G	
A6	A6	A7	DT	WF74G	
A7	A7	A8	DT	WF74G	
A8	A8	A9	DT	WF74G	
A9	A9	A10	DT	WF100G	
A10	A10	A11	DT	WF100G	
A11	A11	A12	DT	WF100G	
A12	A12	A13	DT	WF100G	
B1	B1	B2	3T	WF83G	
B2	B2	B3	3T	WF83G	
B3	B3	B4	3T	WF83G	CHANGES IN-SPAN TO 4T
B4	B4	B5	4T	WF100G	
B5	B5	B6	3T	WF83G	
B6	B6	B7	3T	WF83G	
B7	B7	B8	3T	WF83G	
B8	B8	B9	3T	WF83G	
B9	B9	B10	4T	WF83G	
B10	B10	B11	4T	WF83G	CHANGES IN-SPAN TO 3T
B11	B11	B12	3T	WF83G	CHANGES IN-SPAN TO 3TL
B12	B12	B13	3TL	WF83G	
B13	B13	B14	DTO	WF83G	
B14	B14	B15	DTE	WF83G	
B15	B15	B16	DTE	WF83G	
B16	B16	B17	DTE	WF83G	
B17	B17	B18	DTE	WF83G	
B18	B18	B19	3TL	WF74G	
B19	B19	B20	3TL	WF74G	CHANGES IN-SPAN TO DTE
B20	B20	B21	DTE	WF83G	
B21	B21	B22	DTE	WF83G	
B22	B22	B23	DTE	WF74G	CHANGES IN-SPAN TO DT
C00	B5	C1	STB	N/A	8'6" NOMINAL SUPERSTRUCTURE DEPTH
C1	C1	C2	STB	N/A	8'6" NOMINAL SUPERSTRUCTURE DEPTH

SUBSTRUCTURE SCHEDULE

SPAN	BACK STATION PIER	AHEAD STATION PIER	SUPERSTRUCTURE TYPE	PRECAST GIRDER SIZE	NOTES
D00	B9	D1	ST	WF42G	
D1	D1	D2	ST	WF42G	
D2	D2	D3	ST	WF42G	
D3	D3	D4	ST	WF42G	
D4	D4	D5	ST	WF42G	
E00	B13	E1	ST	WF42G	
E1	E1	E2	ST	WF42G	
E2	E2	E3	ST	WF42G	
E3	E3	E4	ST	WF42G	
F00	B18	F1	ST	WF42G	
F1	F1	F2	ST	WF42G	
F2	F2	F3	ST	WF42G	
F3	F3	F4	ST	WF42G	
F4	F4	F5	ST	WF42G	

SUPERSTRUCTURE LEGEND

SUPERSTRUCTURE TYPE	DESCRIPTION	DRAWING REFERENCE
DT	DOUBLE TRACK	STD-SGX001
DTO	DOUBLE TRACK WITH OVERBUILD	STD-SGX002
3T	3-TRACK AT TEST TRACK	STD-SGX003
3TL	3-TRACK AT LEAD TRACK (WITH OR WITHOUT OVERBUILD)	STD-SGX004
4T	4-TRACK AT LEAD TRACK	STD-SGX005
DTE	DOUBLE TRACK WITH EXTERIOR WALKWAYS	STD-SGX007
ST	SINGLE TRACK FOR LEADS	M08-SGX001
STB	SINGLE TRACK BOX GIRDER FOR LEAD 1	M08-SGX002

NOT FOR CONSTRUCTION

Refer to the plan set COVER drawing for disclaimers regarding this drawing.

REFERENCE CONCEPT DRAWINGS

No.	DATE	DSN	CHK	APP	REVISION

DESIGNED BY: B. HARRIS
DRAWN BY: A. VALENCIA
CHECKED BY: J. MERTH
APPROVED BY: B. HARRIS

PRELIMINARY

AHJ:

PACKAGE #

SUBMITTED BY: PABLO LOPEZ-HILFIKER
DATE: 2/27/2024
REVIEWED BY:
DATE:

LINE IS 1" AT FULL SCALE

SCALE:
FILENAME: OMFS-STD-SSS002
CONTRACT No.: AE-0030-17
DATE: 2/27/2024

SOUND TRANSIT
PRELIMINARY ENGINEERING PLANS
OPERATIONS & MAINTENANCE FACILITY SOUTH

STRUCTURAL
AERIAL GUIDEWAY - SUPERSTRUCTURE
SUPERSTRUCTURE SCHEDULE

DRAWING No.: **STD-SSS002**
FACILITY ID: S08
SHEET No.:
REV:

02/25/24 | 11:22 PM | VALENALV
C:\PWWORKING\WEST01\D2780553\OMFS-STD-SSS002.DWG

NOTES:

1. GUIDEWAY SECTION SHOWN UPSTATION (SB TRACK ON RIGHT SIDE).
2. RAIL AND PLINTH SHOWN LEVEL, VARIES WITH SUPERELEVATION
3. FOR OCS POLE LOCATION AND OFFSET, SEE SYSTEMS DRAWINGS.
4. DISTANCE FROM PGL TO TOP OF TRACK SLAB AT LOW POINT IS CONSTANT.
5. FOR WALKWAY LAYOUT, SEE TRACK DRAWINGS.
6. FOR ACOUSTIC BARRIER LOCATIONS, SEE NOISE WALL SCHEDULE.
7. GUIDEWAY DRAINAGE DETAILS SHOWN ARE FIGURATIVE. SEE DRAINAGE DWGS FOR MORE INFORMATION. NUMBER, SIZE, AND LOCATION OF DRAINS TO BE DETERMINED IN FINAL DESIGN.

W	X	Y
28'-9"	6'-6"	6'-6"

A	B	C
VARIES	VARIES	10'-1"

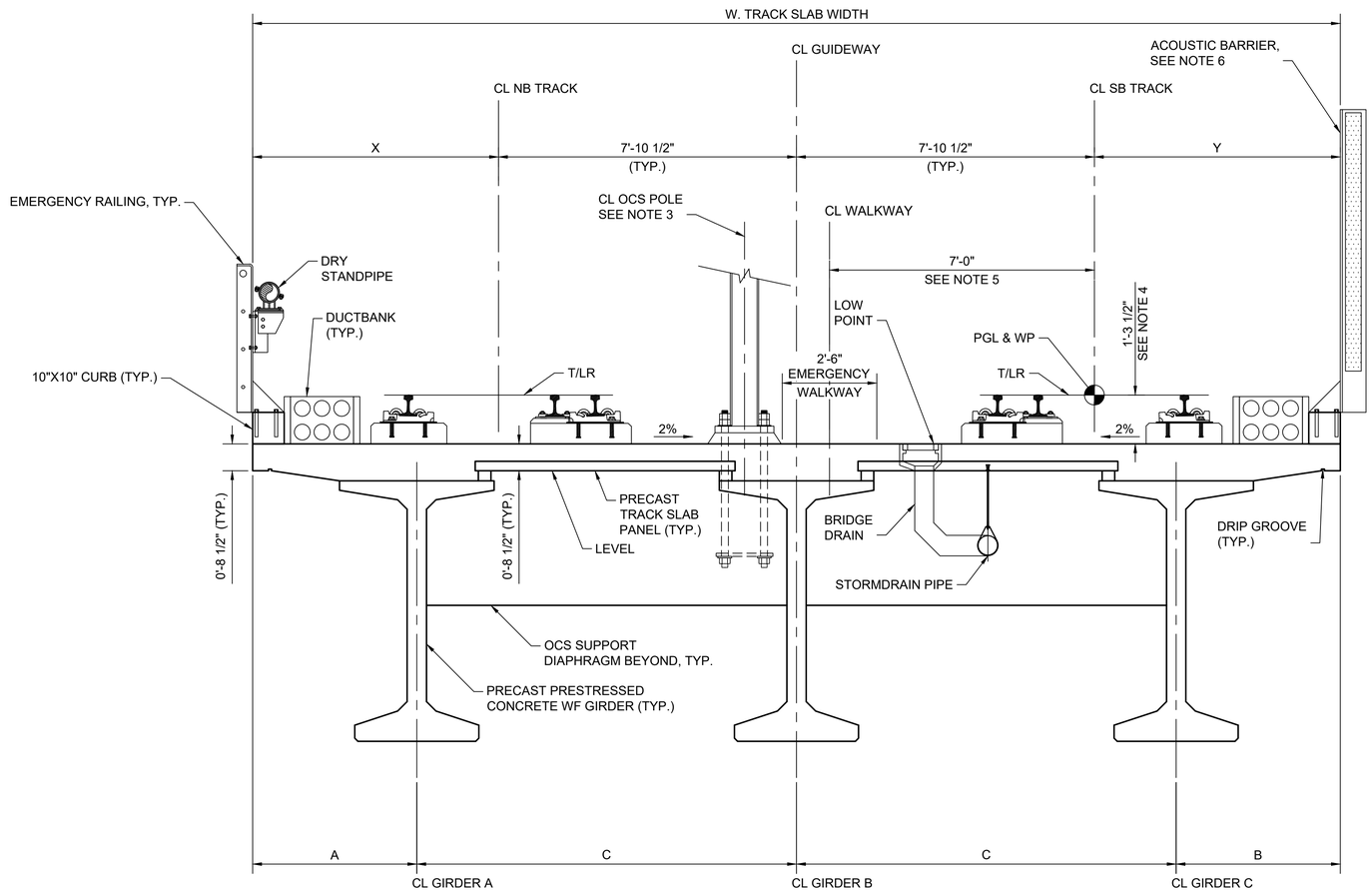

TYPICAL GUIDEWAY SECTION A -

NOT FOR CONSTRUCTION

Refer to the plan set COVER drawing for disclaimers regarding this drawing.

REFERENCE CONCEPT DRAWINGS

No.	DATE	DSN	CHK	APP	REVISION

DESIGNED BY: B. HARRIS
DRAWN BY: A. VALENCIA
CHECKED BY: J. MERTH
APPROVED BY: B. HARRIS

AHJ:

PRELIMINARY

HDR

SUBMITTED BY: PABLO LOPEZ-HILFIKER
DATE: 2/27/2024
REVIEWED BY:
DATE:

LINE IS 1" AT FULL SCALE

SOUNDTRANSIT

PACKAGE #
SCALE:
FILENAME: OMFS-STD-SGX001
CONTRACT No.: AE-0030-17
DATE: 2/27/2024

SOUND TRANSIT
PRELIMINARY ENGINEERING PLANS
OPERATIONS & MAINTENANCE FACILITY SOUTH

STRUCTURAL
AERIAL GUIDEWAY - SUPERSTRUCTURE
TYPICAL DOUBLE TRACK SECTION

DRAWING No.: STD-SGX001
FACILITY ID: S08
SHEET No.:
REV:

02/25/24 | 11:23 PM | VALENALV
C:\PWWORKING\WEST01\D2780553\OMFS-STD-SGX001.DWG

NOTES:

1. GUIDEWAY SECTION SHOWN UPSTATION (SB TRACK ON RIGHT SIDE).
2. RAIL AND PLINTH SHOWN LEVEL, VARIES WITH SUPERELEVATION
3. FOR OCS POLE LOCATION AND OFFSET, SEE SYSTEMS DRAWINGS.
4. DISTANCE FROM PGL TO TOP OF TRACK SLAB AT LOW POINT IS CONSTANT.
5. FOR WALKWAY LAYOUT, SEE TRACK DRAWINGS.
6. FOR ACOUSTIC BARRIER LOCATIONS, SEE NOISE WALL SCHEDULE.
7. GUIDEWAY DRAINAGE DETAILS SHOWN ARE FIGURATIVE. SEE DRAINAGE DWGS FOR MORE INFORMATION. NUMBER, SIZE, AND LOCATION OF DRAINS TO BE DETERMINED IN FINAL DESIGN.

W	X	Y
VARIES	VARIES	9'-1"

A	B	C/D/E
VARIES	VARIES	VARIES

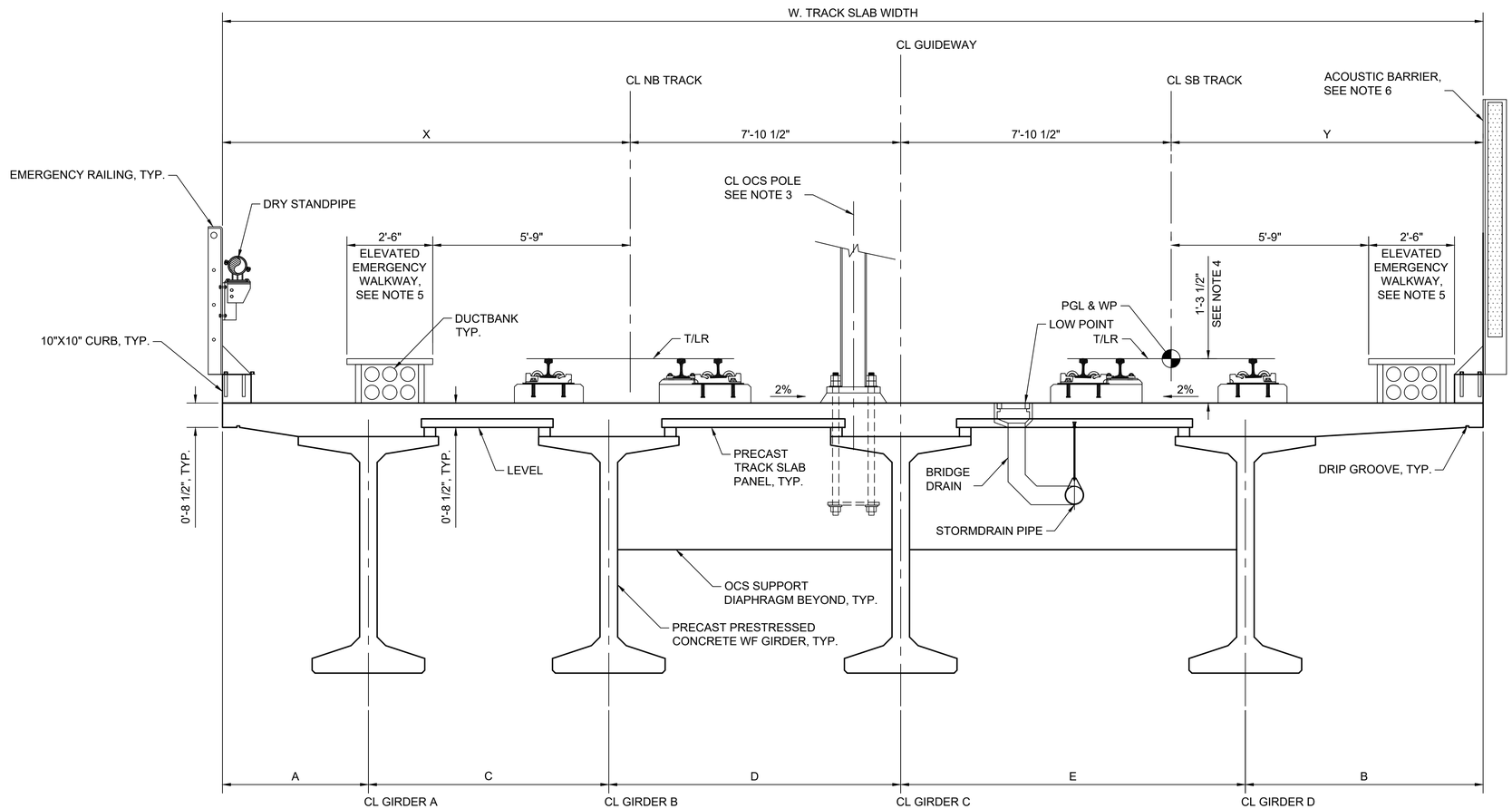

TYPICAL DOUBLE-TRACK GUIDEWAY SECTION WITH OVERBUILD (A / -)

NOT FOR CONSTRUCTION

Refer to the plan set COVER drawing for disclaimers regarding this drawing.

REFERENCE CONCEPT DRAWINGS

No.	DATE	DSN	CHK	APP	REVISION

DESIGNED BY: B. HARRIS
DRAWN BY: A. VALENCIA
CHECKED BY: J. MERTH
APPROVED BY: B. HARRIS

AHJ:

PRELIMINARY

SUBMITTED BY: PABLO LOPEZ-HILFIKER
DATE: 2/27/2024
REVIEWED BY:
DATE:

LINE IS 1" AT FULL SCALE

PACKAGE #
SCALE:
FILENAME: OMFS-STD-SGX002
CONTRACT No.: AE-0030-17
DATE: 2/27/2024

SOUND TRANSIT
PRELIMINARY ENGINEERING PLANS
OPERATIONS & MAINTENANCE FACILITY SOUTH
STRUCTURAL
AERIAL GUIDEWAY - SUPERSTRUCTURE
DOUBLE TRACK SECTION WITH OVERBUILD

DRAWING No.: STD-SGX002
FACILITY ID: S08
SHEET No.:
REV:

02/25/24 | 11:25 PM | VALENALV
C:\PW\WORKING\WEST01\D2780553\OMFS-STD-SGX002.DWG

W	X	Y
44'-6"	6'-6"	6'-6"
47'-1"	6'-6"	9'-1"
47'-1"	9'-1"	6'-6"

A	B	C
4'-3"	4'-3"	9'-0"

NOTES:

1. GUIDEWAY SECTION SHOWN UPSTATION (SB TRACK ON RIGHT SIDE).
2. RAIL AND PLINTH SHOWN LEVEL, VARIES WITH SUPERELEVATION
3. FOR OCS POLE LOCATION AND OFFSET, SEE SYSTEMS DRAWINGS.
4. DISTANCE FROM PGL TO TOP OF TRACK SLAB AT LOW POINT IS CONSTANT.
5. INTERIOR WALKWAY BETWEEN TRACKS NOT ALWAYS PRESET, AND OFFSET FROM CL TRACK VARIES. FOR WALKWAY LAYOUT, SEE TRACK DRAWINGS.
6. EXTERIOR WALKWAY NOT ALWAYS PRESENT ABOVE DUCTBANK. FOR WALKWAY LAYOUT, SEE TRACK DRAWINGS.
7. FOR ACOUSTIC BARRIER LOCATIONS, SEE NOISE WALL SCHEDULE.
8. GUIDEWAY DRAINAGE DETAILS SHOWN ARE FIGURATIVE. SEE DRAINAGE DWGS FOR MORE INFORMATION. NUMBER, SIZE, AND LOCATION OF DRAINS TO BE DETERMINED IN FINAL DESIGN.

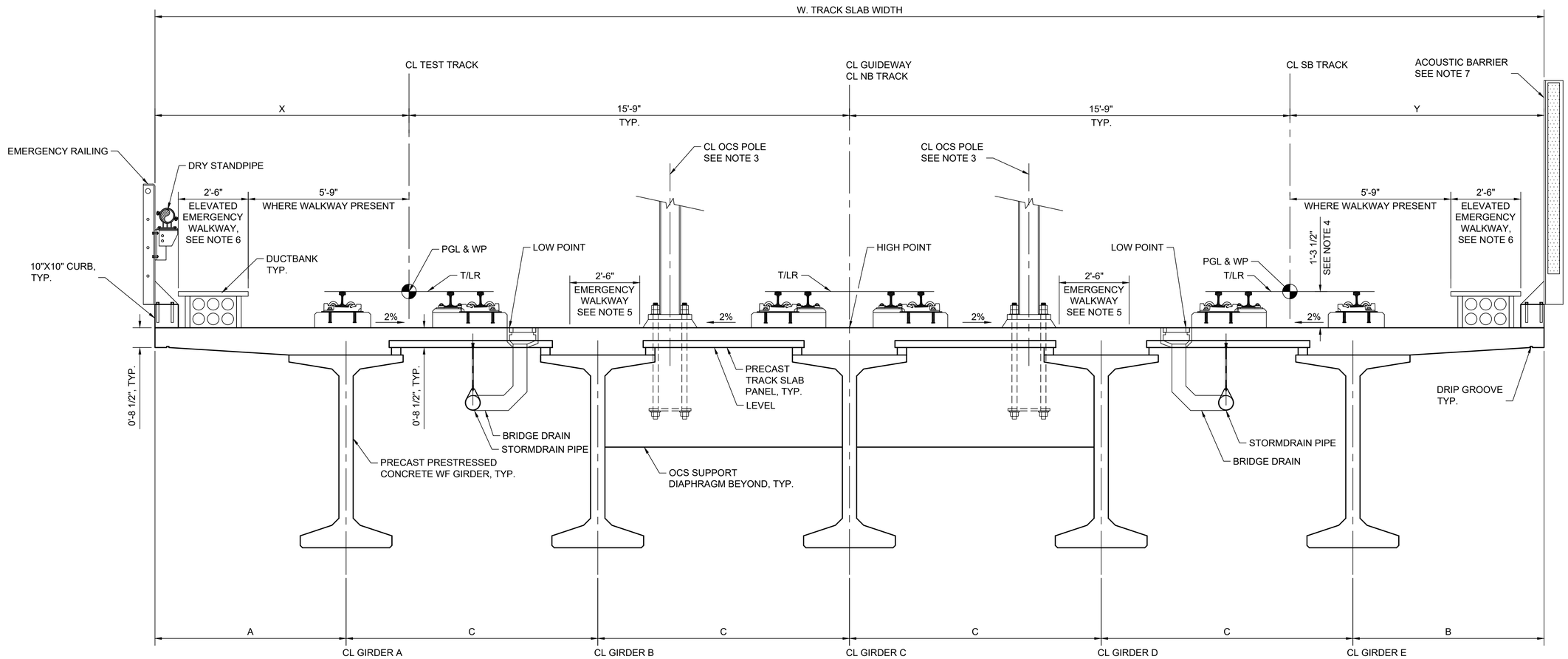

THREE-TRACK GUIDEWAY SECTION AT TEST TRACK (A / -)

NOT FOR CONSTRUCTION

Refer to the plan set COVER drawing for disclaimers regarding this drawing.

REFERENCE CONCEPT DRAWINGS

No.	DATE	DSN	CHK	APP	REVISION

DESIGNED BY: B. HARRIS
DRAWN BY: A. VALENCIA
CHECKED BY: J. MERTH
APPROVED BY: B. HARRIS

AHJ:

PRELIMINARY

SUBMITTED BY: PABLO LOPEZ-HILFIKER
DATE: 2/27/2024
REVIEWED BY:
DATE:

LINE IS 1" AT FULL SCALE

PACKAGE #
SCALE:
FILENAME: OMFS-STD-SGX003
CONTRACT No.: AE-0030-17
DATE: 2/27/2024

SOUND TRANSIT
PRELIMINARY ENGINEERING PLANS
OPERATIONS & MAINTENANCE FACILITY SOUTH
STRUCTURAL
AERIAL GUIDEWAY - SUPERSTRUCTURE
THREE TRACK SECTION AT TEST TRACK

DRAWING No.: **STD-SGX003**
FACILITY ID: S08
SHEET No.:
REV:

02/25/24 | 11:26 PM | VALENALV
C:\PWWORKING\WEST01\D2780553\OMFS-STD-SGX003.DWG

W	X	Y
VARIES	VARIES	9'-1

A	B	C/D/E/F/G
VARIES	VARIES	VARIES

NOTES:

1. GUIDEWAY SECTION SHOWN UPSTATION (SB TRACK ON RIGHT SIDE).
2. RAIL AND PLINTH SHOWN LEVEL, VARIES WITH SUPERELEVATION
3. FOR OCS POLE LOCATION AND OFFSET, SEE SYSTEMS DRAWINGS.
4. DISTANCE FROM PGL TO TOP OF TRACK SLAB AT LOW POINT IS CONSTANT.
5. INTERIOR WALKWAY BETWEEN TRACKS NOT ALWAYS PRESENT, AND OFFSET FROM CL TRACK VARIES. FOR WALKWAY LAYOUT, SEE TRACK DRAWINGS.
6. EXTERIOR WALKWAY NOT ALWAYS PRESENT ABOVE DUCTBANK. FOR WALKWAY LAYOUT, SEE TRACK DRAWINGS.
7. FOR ACOUSTIC BARRIER LOCATIONS, SEE NOISE WALL SCHEDULE.
8. ADDITIONAL GIRDERS AND DECK OVERBUILD EAST OF NB TRACK PRESENT AT SOME SPANS SOUTH OF TEST TRACK TERMINUS. SEE FRAMING PLANS.
9. GUIDEWAY DRAINAGE DETAILS SHOWN ARE FIGURATIVE. SEE DRAINAGE DWGS FOR MORE INFORMATION. NUMBER, SIZE, AND LOCATION OF DRAINS TO BE DETERMINED IN FINAL DESIGN.

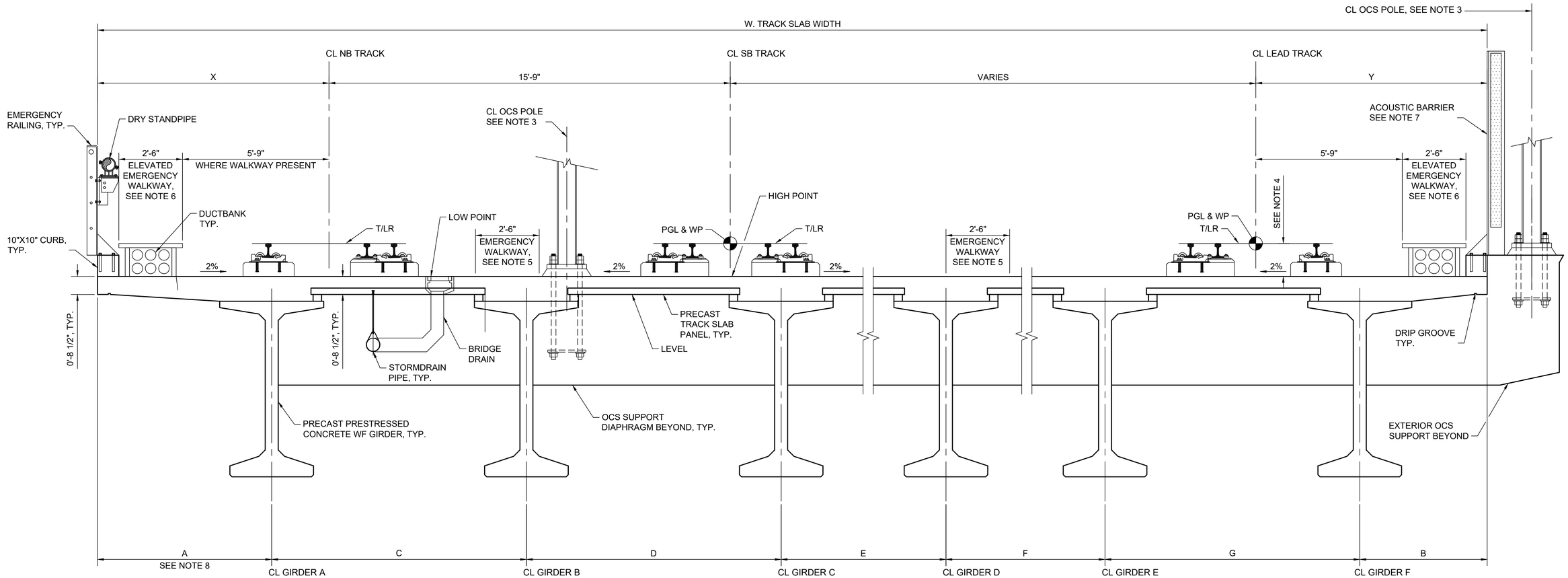

TYPICAL THREE-TRACK GUIDEWAY SECTION AT LEAD TRACK (A / -)

NOT FOR CONSTRUCTION

Refer to the plan set COVER drawing for disclaimers regarding this drawing.

REFERENCE CONCEPT DRAWINGS

No.	DATE	DSN	CHK	APP	REVISION

DESIGNED BY: B. HARRIS
DRAWN BY: A. VALENCIA
CHECKED BY: J. MERTH
APPROVED BY: B. HARRIS

AHJ:

PRELIMINARY

SUBMITTED BY: PABLO LOPEZ-HILFIKER
DATE: 2/27/2024
REVIEWED BY:
DATE:

LINE IS 1" AT FULL SCALE

PACKAGE #

SCALE:
FILENAME: OMFS-STD-SGX004
CONTRACT No.: AE-0030-17
DATE: 2/27/2024

SOUND TRANSIT
PRELIMINARY ENGINEERING PLANS
OPERATIONS & MAINTENANCE FACILITY SOUTH

STRUCTURAL
AERIAL GUIDEWAY - SUPERSTRUCTURE
THREE TRACK SECTION AT LEAD TRACK

DRAWING No.: **STD-SGX004**
FACILITY ID: S08
SHEET No.:
REV:

02/25/24 | 11:27 PM | VALENALV
C:\PWWORKING\WEST01\D2780553\OMFS-STD-SGX004.DWG

W	X	Y
VARIES	6'-6"	VARIES

A	B	C	D	E/F
4'-3"	VARIES	VARIES	VARIES	VARIES

NOTES:

1. GUIDEWAY SECTION SHOWN UPSTATION (SB TRACK ON RIGHT SIDE).
2. RAIL AND PLINTH SHOWN LEVEL, VARIES WITH SUPERELEVATION
3. FOR OCS POLE LOCATION AND OFFSET, SEE SYSTEMS DRAWINGS.
4. DISTANCE FROM PGL TO TOP OF TRACK SLAB AT LOW POINT IS CONSTANT.
5. INTERIOR WALKWAY BETWEEN TRACKS NOT ALWAYS PRESENT, AND OFFSET FROM CL TRACK VARIES. FOR WALKWAY LAYOUT, SEE TRACK DRAWINGS.
6. EXTERIOR WALKWAY NOT ALWAYS PRESENT ABOVE DUCTBANK. FOR WALKWAY LAYOUT, SEE TRACK DRAWINGS.
7. FOR ACOUSTIC BARRIER LOCATIONS, SEE NOISE WALL SCHEDULE.
8. GUIDEWAY DRAINAGE DETAILS SHOWN ARE FIGURATIVE. SEE DRAINAGE DWGS FOR MORE INFORMATION. NUMBER, SIZE, AND LOCATION OF DRAINS TO BE DETERMINED IN FINAL DESIGN.

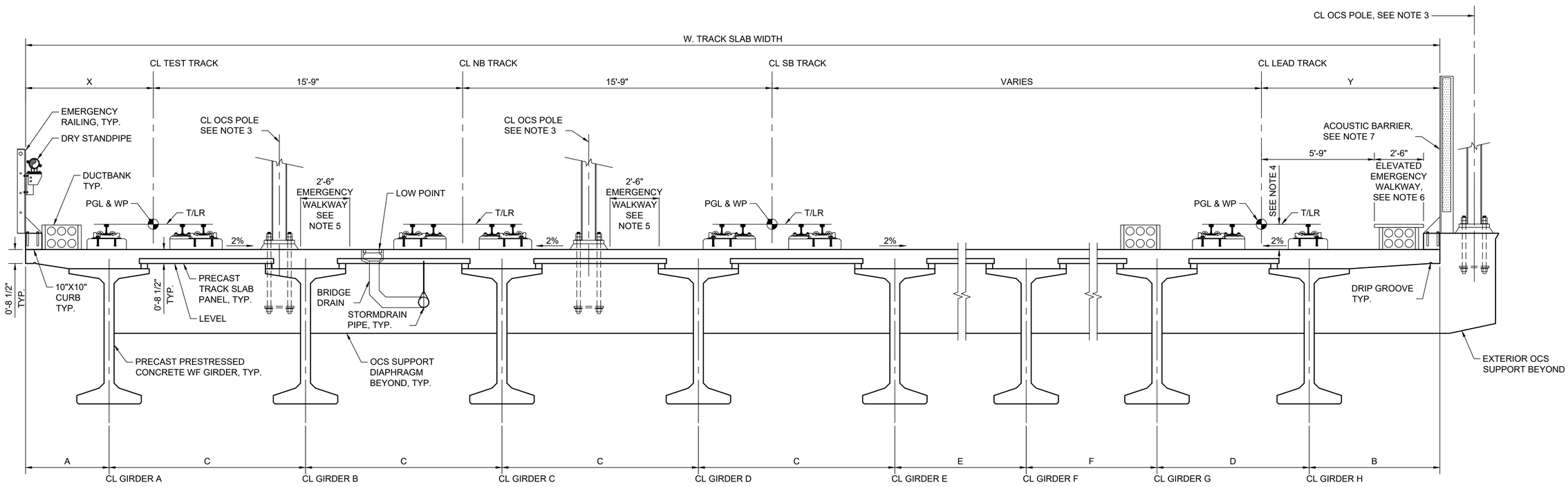

TYPICAL FOUR-TRACK GUIDEWAY SECTION AT LEAD TRACK A -

NOT FOR CONSTRUCTION

Refer to the plan set COVER drawing for disclaimers regarding this drawing.

REFERENCE CONCEPT DRAWINGS

No.	DATE	DSN	CHK	APP	REVISION

DESIGNED BY: B. HARRIS
DRAWN BY: A. VALENCIA
CHECKED BY: J. MERTH
APPROVED BY: B. HARRIS

AHJ:

PRELIMINARY

SUBMITTED BY: PABLO LOPEZ-HILFIKER
DATE: 2/27/2024
REVIEWED BY:
DATE:

LINE IS 1" AT FULL SCALE

PACKAGE #

SCALE:
FILENAME: OMFS-STD-SGX005
CONTRACT No.: AE-0030-17
DATE: 2/27/2024

SOUND TRANSIT
PRELIMINARY ENGINEERING PLANS
OPERATIONS & MAINTENANCE FACILITY SOUTH

STRUCTURAL
AERIAL GUIDEWAY - SUPERSTRUCTURE
FOUR TRACK SECTION AT LEAD TRACK

DRAWING No.: **STD-SGX005**
FACILITY ID: S08
SHEET No.:
REV:

02/25/24 | 11:28 PM | VALENALV
C:\PWWORKING\WEST01\D2780553\OMFS-STD-SGX005.DWG

NOTES:

1. GUIDEWAY SECTION SHOWN UPSTATION (SB TRACK ON RIGHT SIDE).
2. RAIL AND PLINTH SHOWN LEVEL, VARIES WITH SUPERELEVATION
3. FOR OCS POLE LOCATION AND OFFSET, SEE SYSTEMS DRAWINGS.
4. DISTANCE FROM PGL TO TOP OF TRACK SLAB AT LOW POINT IS CONSTANT.
5. FOR WALKWAY LAYOUT, SEE TRACK DRAWINGS.
6. FOR ACOUSTIC BARRIER LOCATIONS, SEE NOISE WALL SCHEDULE.
7. GUIDEWAY DRAINAGE DETAILS SHOWN ARE FIGURATIVE. SEE DRAINAGE DWGS FOR MORE INFORMATION. NUMBER, SIZE, AND LOCATION OF DRAINS TO BE DETERMINED IN FINAL DESIGN.

W	X	Y
33'-11"	9'-1"	9'-1"

A	B	C
VARIES	VARIES	10'-1"

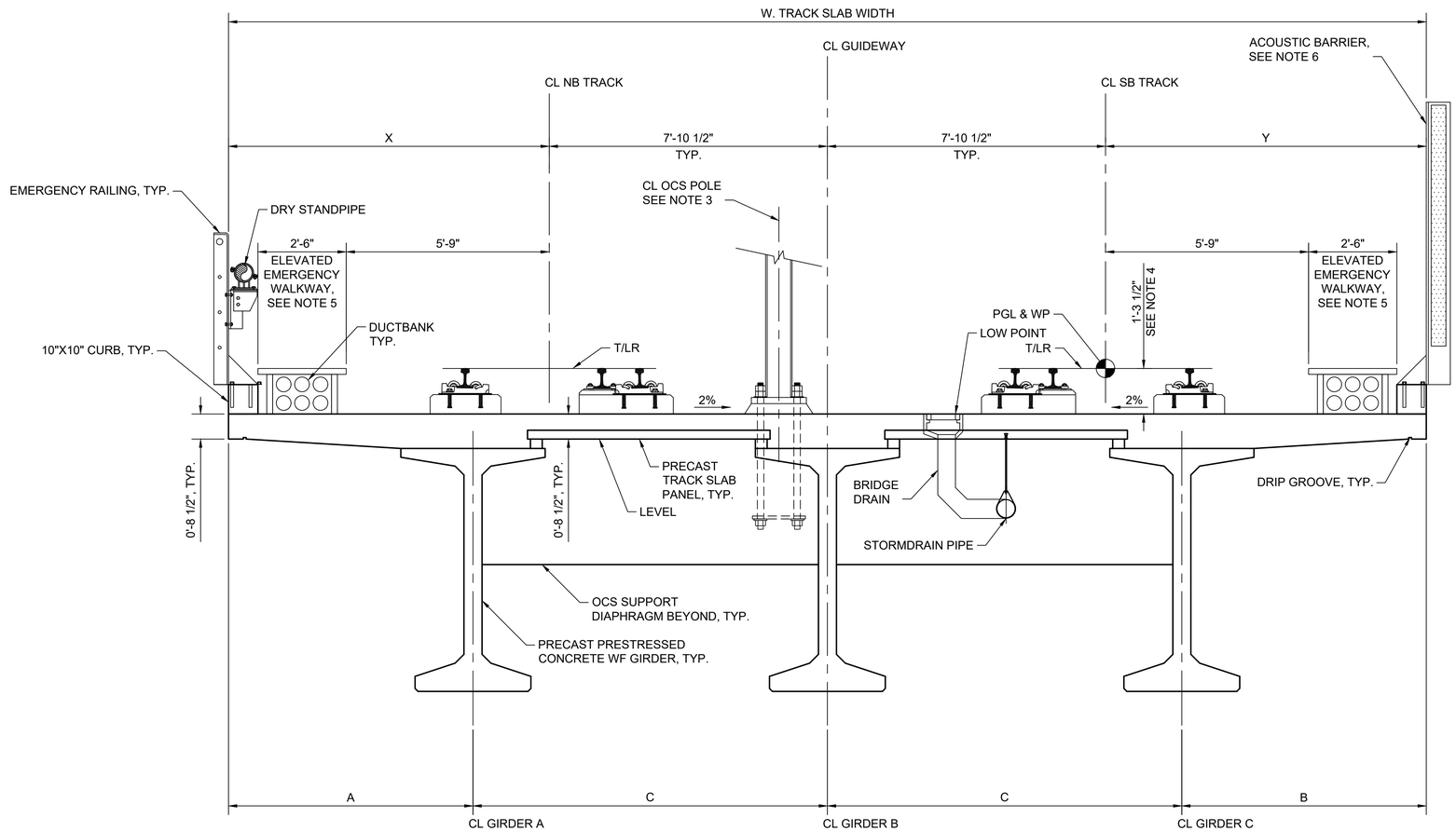

TYPICAL DOUBLE TRACK GUIDEWAY SECTION WITH EXTERIOR WALKWAYS (A / -)

NOT FOR CONSTRUCTION

Refer to the plan set COVER drawing for disclaimers regarding this drawing.

REFERENCE CONCEPT DRAWINGS

No.	DATE	DSN	CHK	APP	REVISION

DESIGNED BY: B. HARRIS
DRAWN BY: A. VALENCIA
CHECKED BY: J. MERTH
APPROVED BY: B. HARRIS

AHJ:

PRELIMINARY

HDR

SUBMITTED BY: PABLO LOPEZ-HILFIKER
DATE: 2/27/2024
REVIEWED BY:
DATE:

LINE IS 1" AT FULL SCALE

SOUNDTRANSIT

PACKAGE #
SCALE:
FILENAME: OMFS-STD-SGX007
CONTRACT No.: AE-0030-17
DATE: 2/27/2024

SOUND TRANSIT
PRELIMINARY ENGINEERING PLANS
OPERATIONS & MAINTENANCE FACILITY SOUTH
STRUCTURAL
AERIAL GUIDEWAY - SUPERSTRUCTURE
DOUBLE TRACK SECTION WITH EXTERIOR WALKWAYS

DRAWING No.: **STD-SGX007**
FACILITY ID: S08
SHEET No.:
REV:

02/25/24 | 11:30 PM | VALENALV
C:\PWWORKING\WEST01\D2780553\OMFS-STD-SGX007.DWG

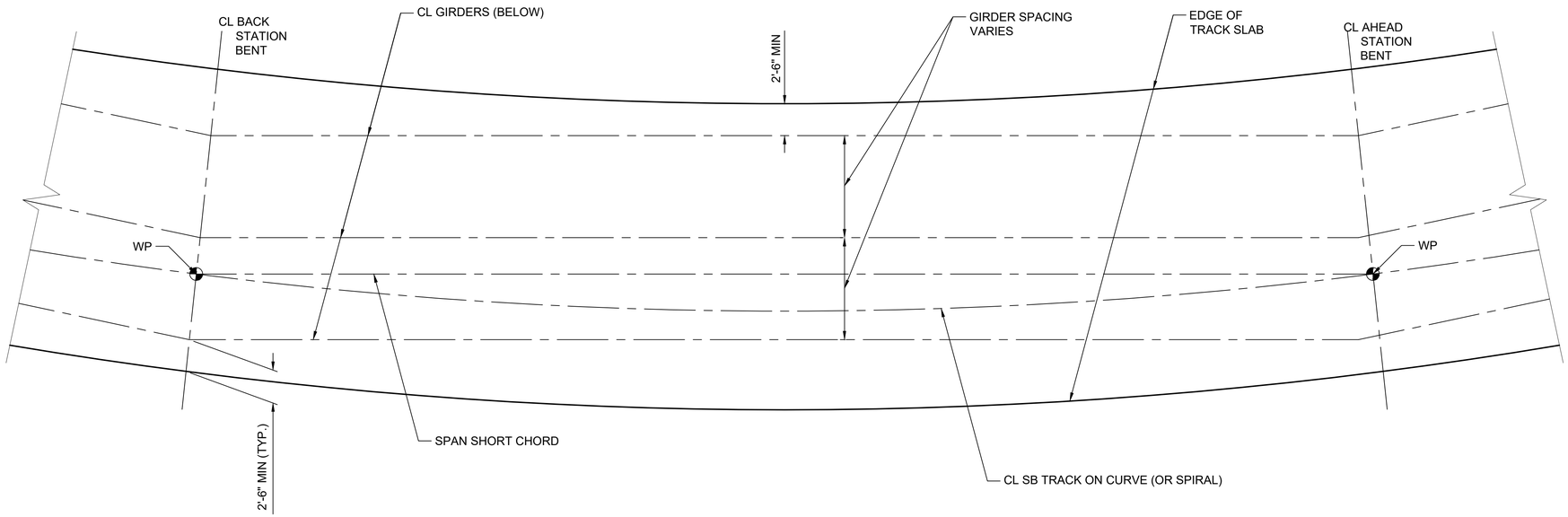

TYPICAL FRAMING PLAN ON CURVES

NTS

NOTES:

1. THE SPAN SHORT CHORD IS STRAIGHT LINE BETWEEN THE BACK STATION AND AHEAD STATION BENTS AT THE CENTERLINE OF THE SB TRACK.
2. GIRDERS WITHIN THE SPAN ARE TYPICALLY PARALLEL TO THE SPAN SHORT CHORD.
3. 3 - GIRDER SUPERSTRUCTURE SHOWN, 4 OR MORE GIRDER SUPERSTRUCTURE SIMILAR.

NOT FOR CONSTRUCTION

Refer to the plan set COVER drawing for disclaimers regarding this drawing.

REFERENCE CONCEPT DRAWINGS

No.	DATE	DSN	CHK	APP	REVISION

DESIGNED BY: B. HARRIS
DRAWN BY: A. VALENCIA
CHECKED BY: J. MERTH
APPROVED BY: B. HARRIS

AHJ:

PRELIMINARY

SUBMITTED BY: PABLO LOPEZ-HILFIKER
DATE: 2/27/2024
REVIEWED BY:
DATE:

LINE IS 1" AT FULL SCALE

PACKAGE #

SCALE:
FILENAME: OMFS-STD-SGS002
CONTRACT No.: AE-0030-17
DATE: 2/27/2024

SOUND TRANSIT
PRELIMINARY ENGINEERING PLANS
OPERATIONS & MAINTENANCE FACILITY SOUTH
STRUCTURAL
AERIAL GUIDEWAY - SUPERSTRUCTURE
TYPICAL FRAMING PLAN ON CURVES - MAINLINE

DRAWING No.: **STD-SGS002**
FACILITY ID: S08
SHEET No.:
REV:

02/25/24 | 11:31 PM | VALENALV
C:\PWWORKING\WEST01\D2780553\OMFS-STD-SGS002.DWG

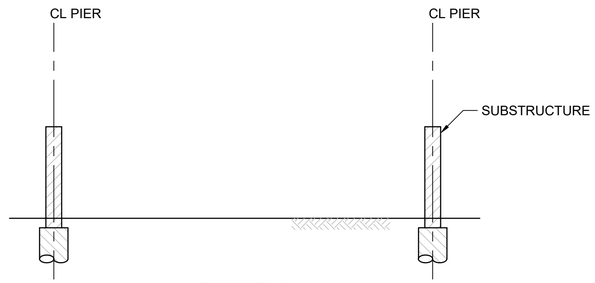

PHASE 1

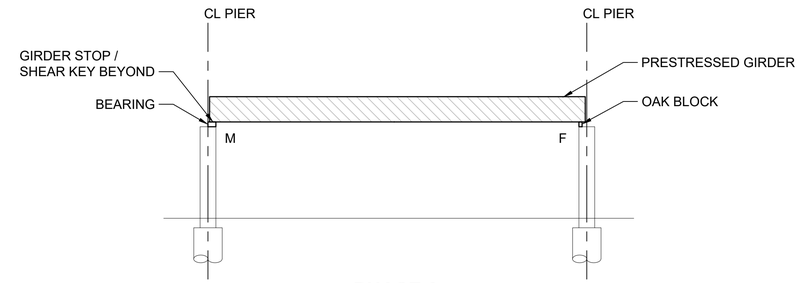

PHASE 2

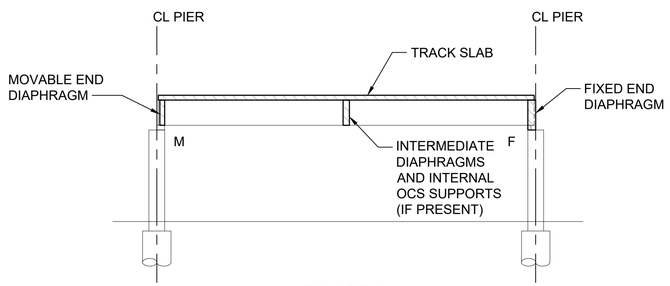

PHASE 3

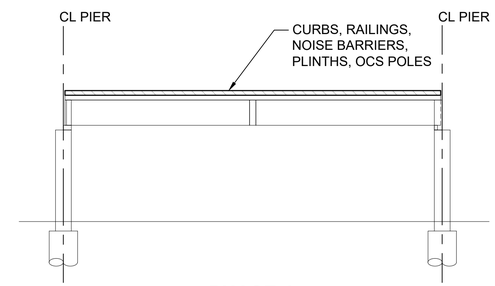

PHASE 4

PHASE	SUBPHASE	ITEM OF WORK
1	1.1	PLACE SUBSTRUCTURE
	1.2	PLACE BEARINGS AT MOVABLE END AND OAK BLOCKS AT FIXED END PIERS
2	2.1	DELIVER AND ERECT PRESTRESSED GIRDERS
	2.2	PLACE GIRDER STOPS / SHEAR KEYS AT MOVABLE END
3	3.1	PLACE DIAPHRAGMS AND OCS POLE SUPPORTS (IF PRESENT)
	3.2	PLACE TRACK SLAB
4	4.1	PLACE BARRIERS, CURBS, RAILINGS, NOISE BARRIERS, PLINTHS, AND OCS POLES

NOT FOR CONSTRUCTION

Refer to the plan set COVER drawing for disclaimers regarding this drawing.

REFERENCE CONCEPT DRAWINGS

No.	DATE	DSN	CHK	APP	REVISION

DESIGNED BY: B. HARRIS
DRAWN BY: A. VALENCIA
CHECKED BY: P. LI
APPROVED BY: B. HARRIS

AHJ:

PRELIMINARY

SUBMITTED BY: PABLO LOPEZ-HILFIKER
DATE: 2/27/2024
REVIEWED BY:
DATE:

LINE IS 1" AT FULL SCALE

PACKAGE #

SCALE:
FILENAME: OMFS-STD-SSS004
CONTRACT No.: AE-0030-17
DATE: 2/27/2024

SOUND TRANSIT
PRELIMINARY ENGINEERING PLANS
OPERATIONS & MAINTENANCE FACILITY SOUTH

STRUCTURAL
AERIAL GUIDEWAY - SUPERSTRUCTURE
TYP CONSTRUCTION SEQUENCE - P/S GIRDER

DRAWING No.: **STD-SSS004**
FACILITY ID: S08
SHEET No.:
REV:

02/25/24 | 11:32 PM | VALENALV
C:\PWWORKING\WEST01\D2780553\OMFS-STD-SSS004.DWG

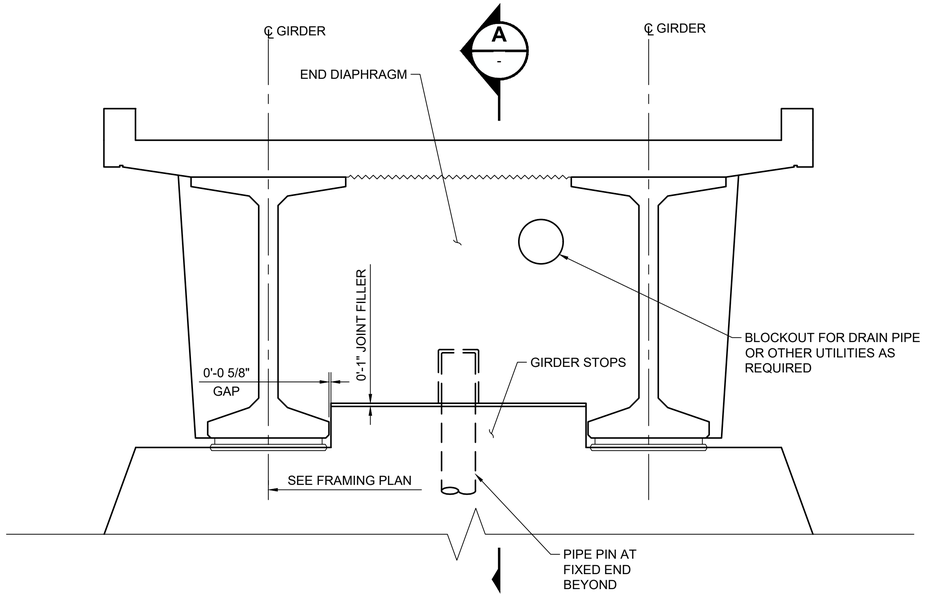

END DIAPHRAGM ELEVATION

MOVEMENT END SHOWN

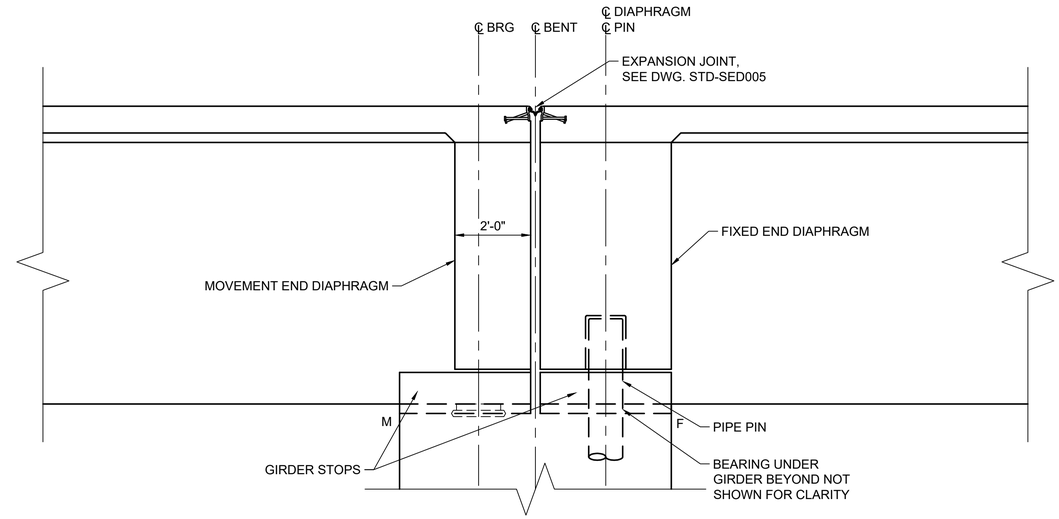

SECTION A -

NOTES:

1. DIAPHRAGM THIS SHEET APPLICABLE TO WSDOT WF GIRDER GUIDEWAYS ONLY.
2. DIAPHRAGMS AT 2-GIRDER GUIDEWAY SECTION SHOWN. SIMILAR AT 3 OR MORE GIRDER GUIDEWAY SECTIONS.
3. DIAPHRAGMS SHOWN HERE NOT FOR SUPPORT OF OCS POLES. OCS SUPPORT DIAPHRAGMS NOT SHOWN.

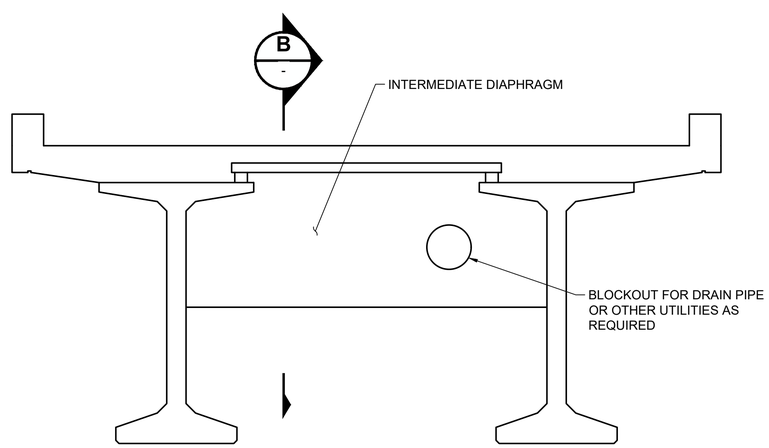

INTERMEDIATE DIAPHRAGM ELEVATION

GIRDER	D
WF42G	2'-3"
WF74G	3'-9"
WF83G	5'-0"
WF100G	5'-11"
WF100PTG	5'-11"

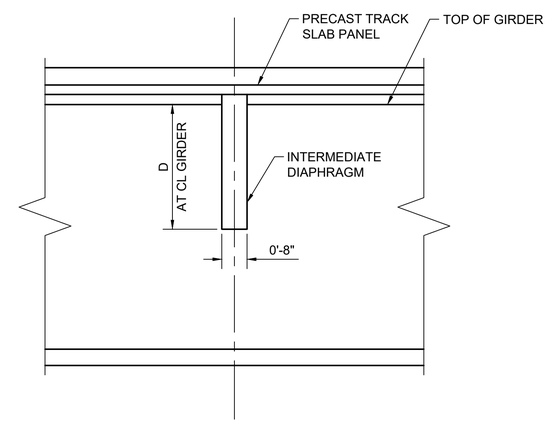

SECTION B -

NOT FOR CONSTRUCTION

Refer to the plan set COVER drawing for disclaimers regarding this drawing.

REFERENCE CONCEPT DRAWINGS

No.	DATE	DSN	CHK	APP	REVISION

DESIGNED BY: B. HARRIS
DRAWN BY: A. VALENCIA
CHECKED BY: J. MERTH
APPROVED BY: B. HARRIS

AHJ:

PRELIMINARY

SUBMITTED BY: PABLO LOPEZ-HILFIKER
DATE: 2/27/2024
REVIEWED BY:
DATE:

LINE IS 1" AT FULL SCALE

PACKAGE #

SCALE:
FILENAME: OMFS-STD-SGX006
CONTRACT No.: AE-0030-17
DATE: 2/27/2024

SOUND TRANSIT
PRELIMINARY ENGINEERING PLANS
OPERATIONS & MAINTENANCE FACILITY SOUTH

STRUCTURAL
AERIAL GUIDEWAY - SUPERSTRUCTURE
DIAPHRAGM DETAILS

DRAWING No.: STD-SGX006
FACILITY ID: S08
SHEET No.:
REV:

02/25/24 | 11:33 PM | VALENALV
C:\PWWORKING\WEST01\D2780553\OMFS-STD-SGX006.DWG

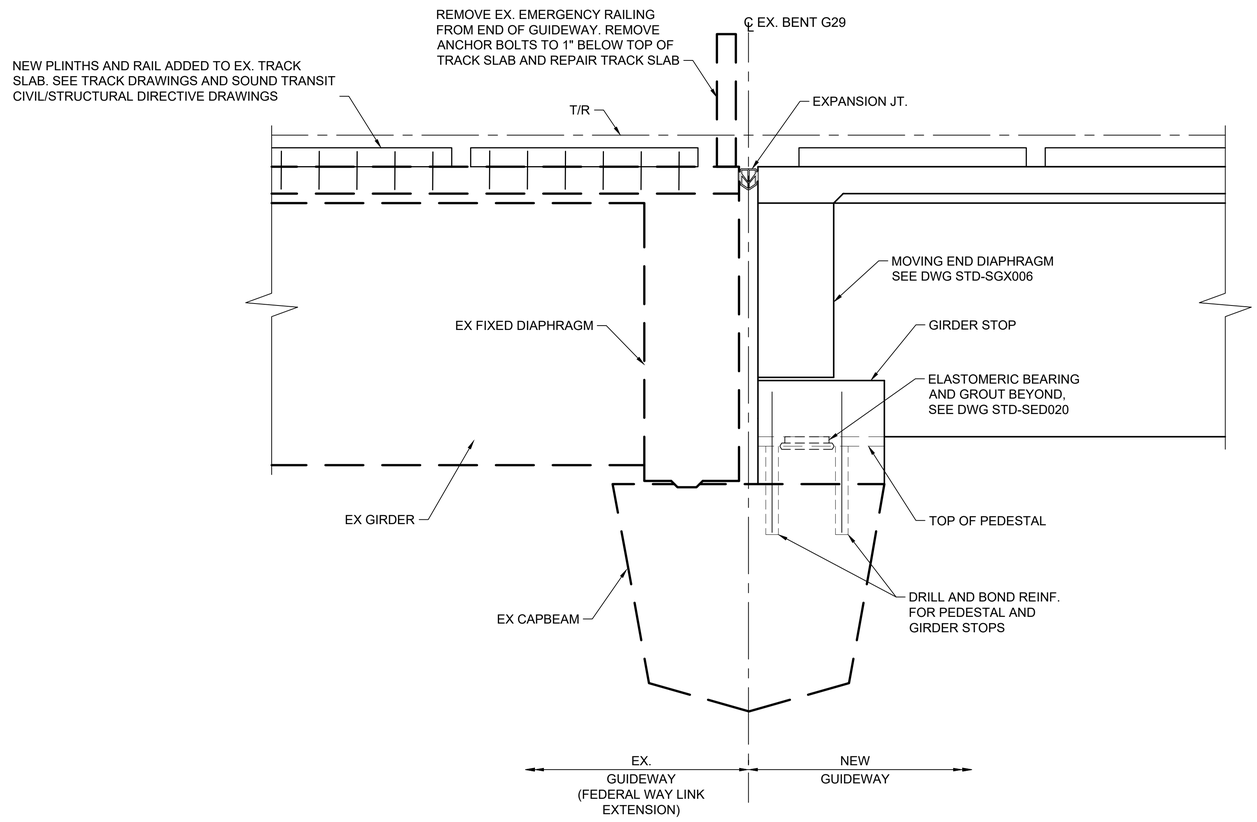

DETAIL 1 / -
SCALE: 1/2" = 1'-0"

NOTES:

1. SEE TRACK AND SYSTEMS DRAWINGS FOR ADDITIONAL WORK REQUIRED ON EXISTING SPAN, INCLUDING BUT NOT LIMITED TO: NEW RAIL, REMOVAL OF EXISTING BUMPING POSTS, EXISTING SHIMMING, NEW OCS AND OTHER SYSTEMS WORK AND TIE-IN.

NOT FOR CONSTRUCTION

Refer to the plan set COVER drawing for disclaimers regarding this drawing.

REFERENCE CONCEPT DRAWINGS

No.	DATE	DSN	CHK	APP	REVISION

DESIGNED BY: B. HARRIS
DRAWN BY: A. VALENCIA
CHECKED BY: J. MERTH
APPROVED BY: B. HARRIS

AHJ:

PRELIMINARY

SUBMITTED BY: PABLO LOPEZ-HILFIKER
DATE: 2/27/2024
REVIEWED BY:
DATE:

LINE IS 1" AT FULL SCALE

PACKAGE #

SCALE:
FILENAME: OMFS-STD-SED018
CONTRACT No.: AE-0030-17
DATE: 2/27/2024

SOUND TRANSIT
PRELIMINARY ENGINEERING PLANS
OPERATIONS & MAINTENANCE FACILITY SOUTH
STRUCTURAL
AERIAL GUIDEWAY - SUPERSTRUCTURE
DETAIL AT EXISTING BENT

DRAWING No.: **STD-SED018**
FACILITY ID: S08
SHEET No.:
REV:

02/25/24 | 11:35 PM | VALENALV
C:\PWWORKING\WEST01\D2780553\OMFS-STD-SED018.DWG

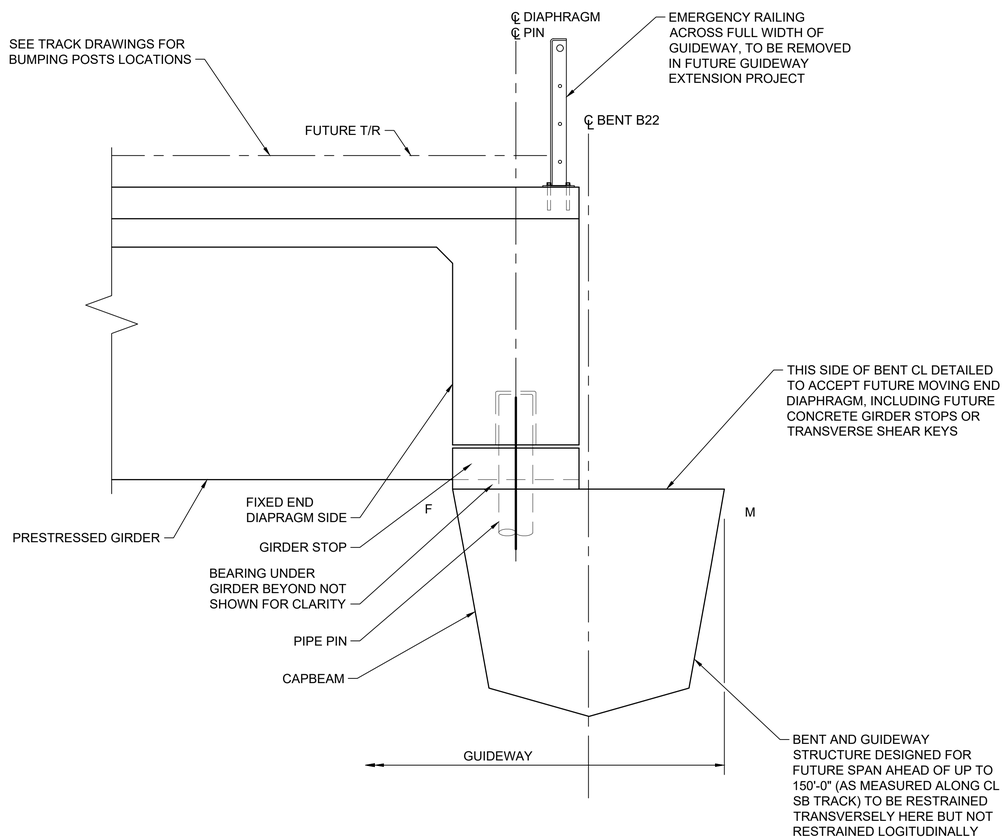

DETAIL 1 / -

SCALE: 1/2" = 1'-0"

NOT FOR CONSTRUCTION

Refer to the plan set COVER drawing for disclaimers regarding this drawing.

REFERENCE CONCEPT DRAWINGS

No.	DATE	DSN	CHK	APP	REVISION

DESIGNED BY: B. HARRIS
DRAWN BY: A. VALENCIA
CHECKED BY: J. MERTH
APPROVED BY: B. HARRIS

AHJ:

PRELIMINARY

SUBMITTED BY: PABLO LOPEZ-HILFIKER
DATE: 2/27/2024
REVIEWED BY:
DATE:

LINE IS 1" AT FULL SCALE

PACKAGE #

SCALE:
FILENAME: OMFS-STD-SED019
CONTRACT No.: AE-0030-17
DATE: 2/27/2024

SOUND TRANSIT
PRELIMINARY ENGINEERING PLANS
OPERATIONS & MAINTENANCE FACILITY SOUTH

STRUCTURAL
AERIAL GUIDEWAY - SUPERSTRUCTURE
DETAIL AT TERMINUS BENT

DRAWING No.: **STD-SED019**
FACILITY ID: S08
SHEET No.:
REV:

02/25/24 | 11:36 PM | VALENALV
C:\PWWORKING\WEST01\D2780553\OMFS-STD-SED019.DWG

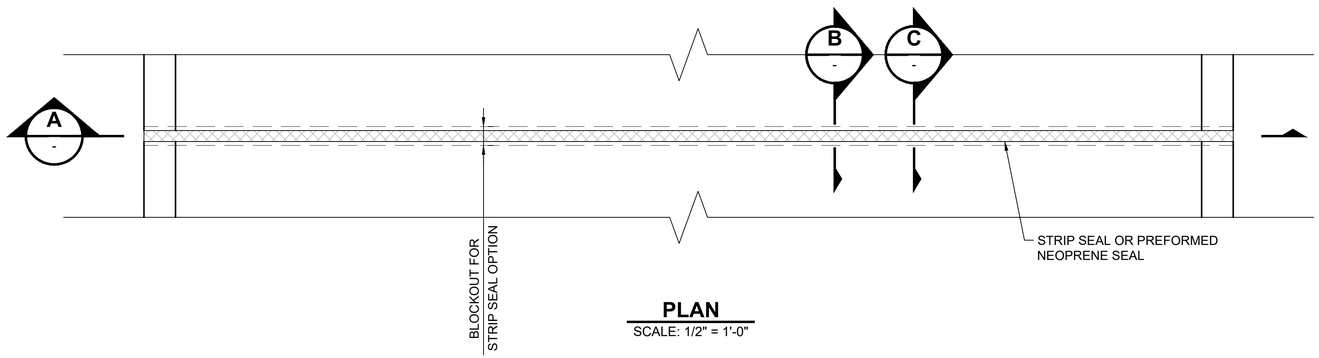

PLAN
SCALE: 1/2" = 1'-0"

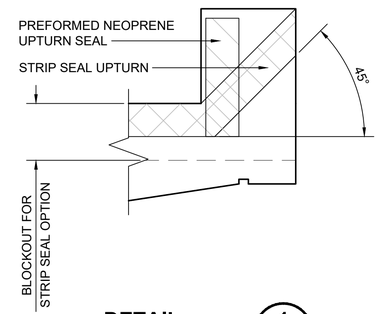

DETAIL 1 -
SCALE: 1 1/2" = 1'-0"

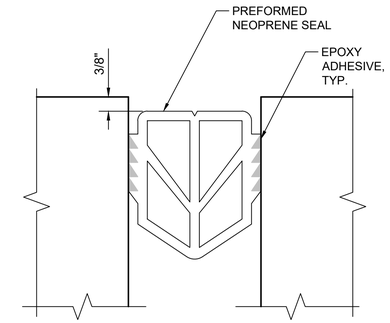

SECTION THRU EXPANSION JOINT C -
NTS
(FOR PREFORMED NEOPRENE SEAL OPTION)

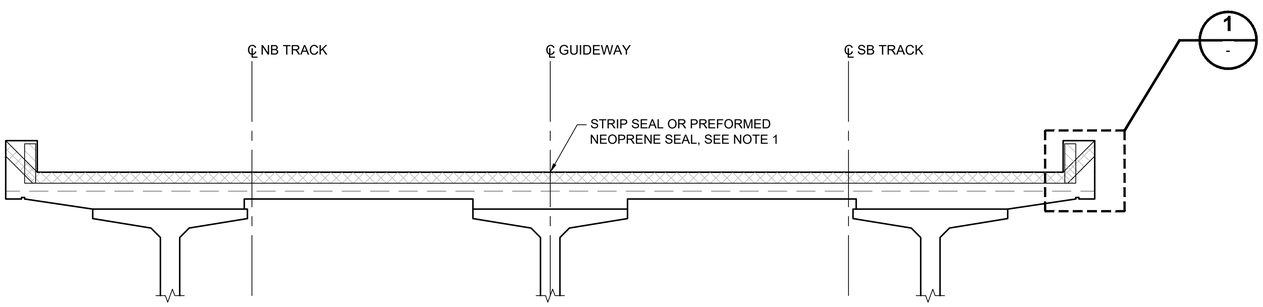

SECTION A -
SCALE: 1/2" = 1'-0"

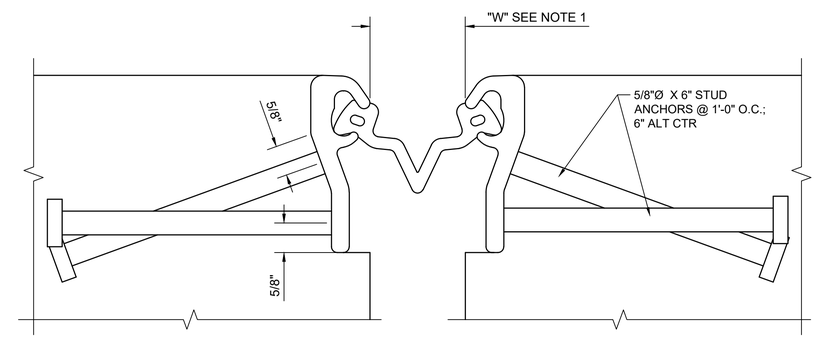

SECTION THRU EXPANSION JOINT B -
NTS
(FOR STRIP SEAL OPTION)

NOTES:

1. PREFORMED NEOPRENE SEAL FOR USE IN TYPICAL JOINTS WITH MOVEMENT RANGE UP TO 3.75". STRIP SEAL FOR USE WITH MOVEMENT RANGE UP TO 5".
2. METAL COMPONENTS SHALL CONFORM TO ASTM A36 OR A588.
3. JOINT OPENINGS ARE MEASURED NORMAL TO JOINT.
4. THE ENTIRE STRIP SEAL ASSEMBLY SHALL BE CONSTRUCTED SO THAT THE STRIP SEAL MAY BE REMOVED AND REPLACED.
5. STEEL COMPONENTS SHALL BE HOT-DIP GALVANIZED.

NOT FOR CONSTRUCTION

Refer to the plan set COVER drawing for disclaimers regarding this drawing.

REFERENCE CONCEPT DRAWINGS

No.	DATE	DSN	CHK	APP	REVISION

DESIGNED BY: B. HARRIS
DRAWN BY: A. VALENCIA
CHECKED BY: P. LI
APPROVED BY: B. HARRIS

AHJ:

PRELIMINARY

SUBMITTED BY: PABLO LOPEZ-HILFIKER
DATE: 2/27/2024
REVIEWED BY:
DATE:

LINE IS 1" AT FULL SCALE

SCALE:
FILENAME: OMFS-STD-SED005
CONTRACT No.: AE-0030-17
DATE: 2/27/2024

PACKAGE #

SOUND TRANSIT
PRELIMINARY ENGINEERING PLANS
OPERATIONS & MAINTENANCE FACILITY SOUTH

STRUCTURAL
AERIAL GUIDEWAY - SUPERSTRUCTURE
EXPANSION JOINT DETAILS

DRAWING No.: STD-SED005
FACILITY ID: S08
SHEET No.:
REV:

02/25/24 | 11:38 PM | VALENALV
C:\PWWORKING\WEST01\D2780553\OMFS-STD-SED005.DWG

NOTES:

1. GUIDEWAY DRAINAGE DETAILS SHOWN ARE FIGURATIVE. SEE DRAINAGE DWGS FOR MORE INFORMATION.
2. NUMBER, SIZE, AND LOCATION OF DRAINS TO BE DETERMINED IN FINAL DESIGN.
3. SEE DRAINAGE DWGS FOR CONCEPTUAL LOCATION OF DOWNSPOUTS AND CONVEYANCE PIPE LAYOUTS.

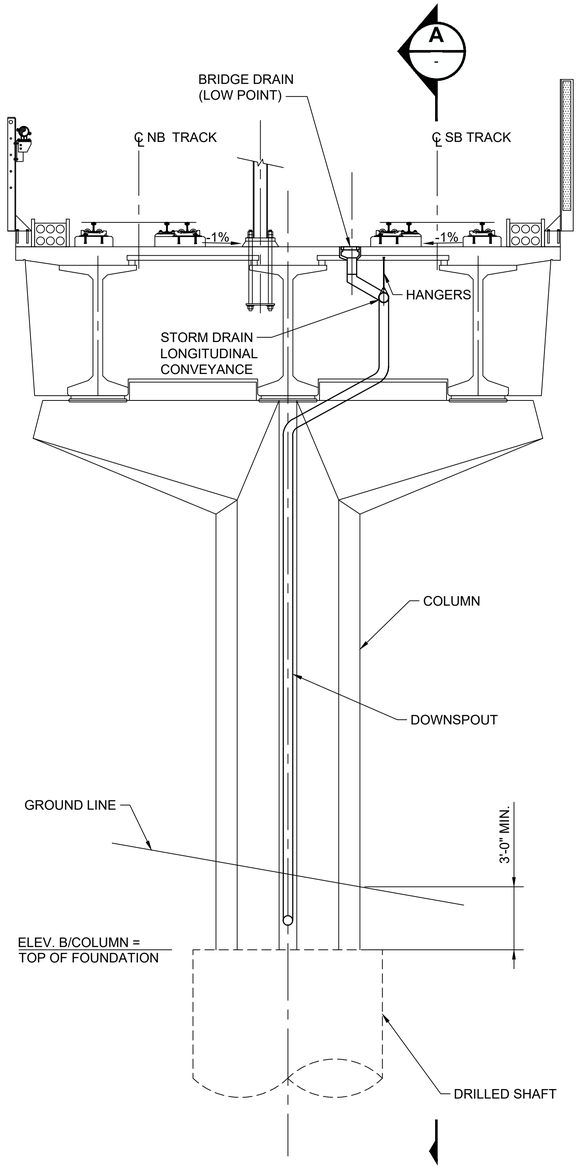

TYPICAL BRIDGE DRAINAGE
SCALE: 1/4" = 1'-0"

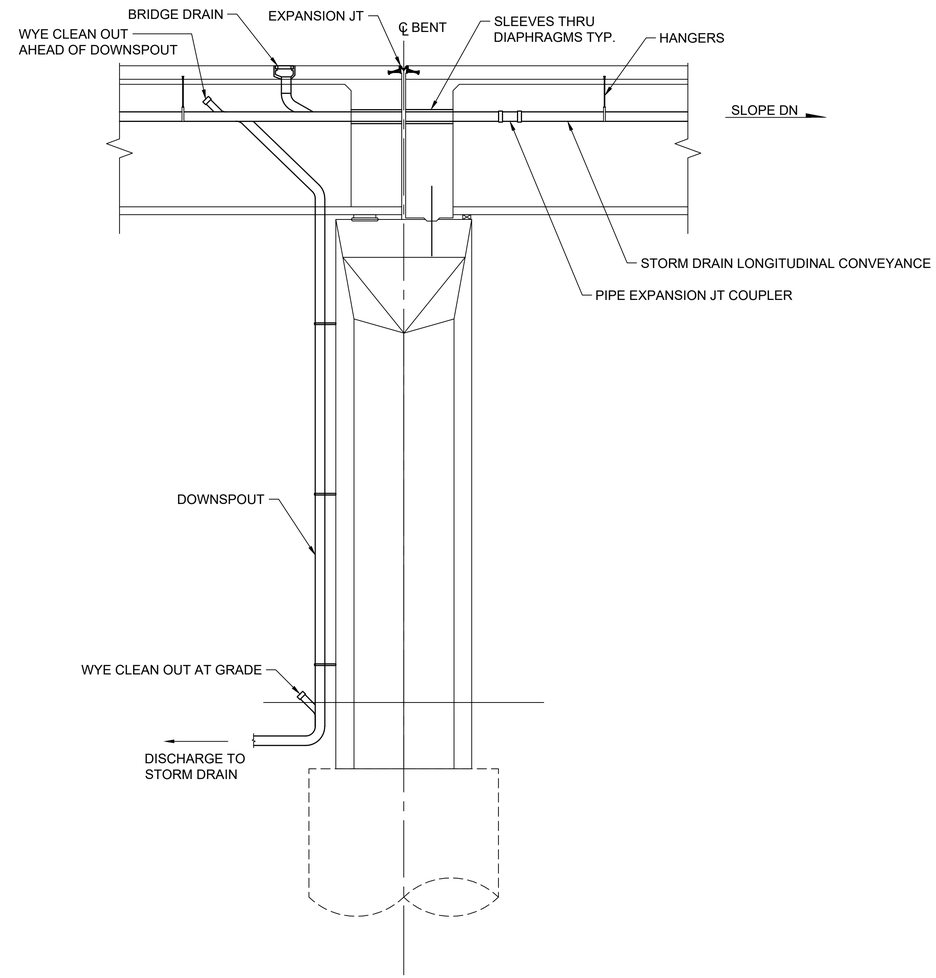

SECTION A
SCALE: 1/4" = 1'-0"

NOT FOR CONSTRUCTION

Refer to the plan set COVER drawing for disclaimers regarding this drawing.

REFERENCE CONCEPT DRAWINGS

No.	DATE	DSN	CHK	APP	REVISION

DESIGNED BY: B. HARRIS
DRAWN BY: A. VALENCIA
CHECKED BY: P. LI
APPROVED BY: B. HARRIS

AHJ:

PRELIMINARY

SUBMITTED BY: PABLO LOPEZ-HILFIKER
DATE: 2/27/2024
REVIEWED BY:
DATE:

LINE IS 1" AT FULL SCALE

PACKAGE #
SCALE:
FILENAME: OMFS-STD-SDD001
CONTRACT No.: AE-0030-17
DATE: 2/27/2024

SOUND TRANSIT
PRELIMINARY ENGINEERING PLANS
OPERATIONS & MAINTENANCE FACILITY SOUTH

STRUCTURAL
AERIAL GUIDEWAY - SUPERSTRUCTURE
DRAINAGE DETAILS

DRAWING No.: **STD-SDD001**
FACILITY ID: S08
SHEET No.:
REV:

02/25/24 | 11:44 PM | VALENALV
C:\PWWORKING\WEST01\D2780553\OMFS-STD-SDD001.DWG

TYPICAL ELASTOMERIC BEARING PAD SIZES			
GIRDER	W	L	T
WF42G			
WF74G			
WF83G			
WF100G			

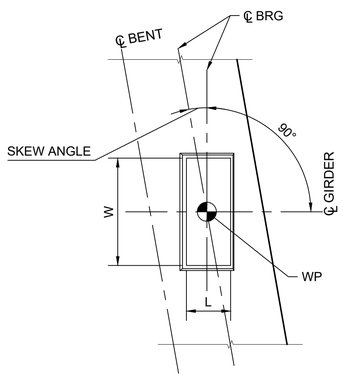

ELASTOMERIC BEARING PLAN LAYOUT
SCALE: 1/2" = 1'-0"

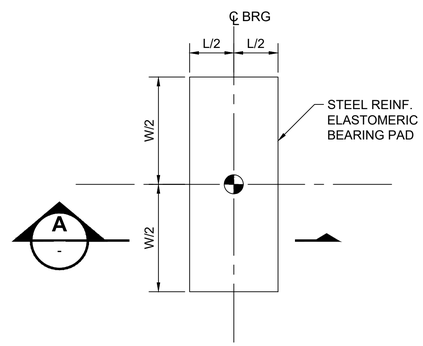

ELASTOMERIC BEARING PLAN
SCALE: 1" = 1'-0"

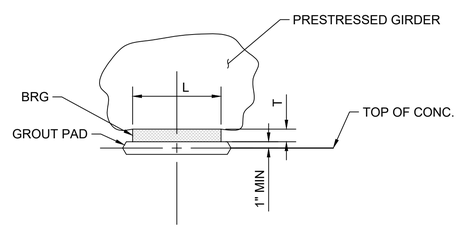

SECTION A
SCALE: 1" = 1'-0"

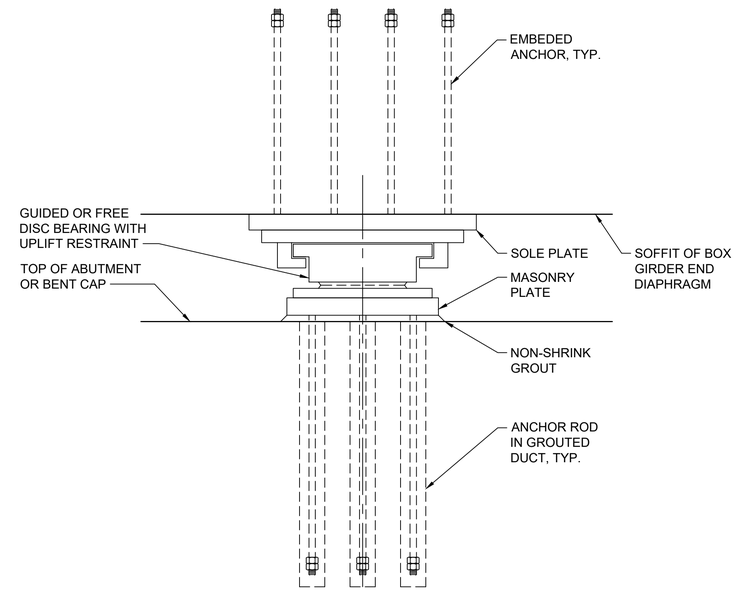

HLMR (DISC) BEARING FOR POST-TENSIONED CONCRETE BOX GIRDERS - ELEVATION
SCALE: 1" = 1'-0"

NOT FOR CONSTRUCTION

Refer to the plan set COVER drawing for disclaimers regarding this drawing.

REFERENCE CONCEPT DRAWINGS

No.	DATE	DSN	CHK	APP	REVISION

DESIGNED BY: B. HARRIS
DRAWN BY: A. VALENCIA
CHECKED BY: P. LI
APPROVED BY: B. HARRIS

AHJ:

PRELIMINARY

SUBMITTED BY: PABLO LOPEZ-HILFIKER
DATE: 2/27/2024
REVIEWED BY:
DATE:

LINE IS 1" AT FULL SCALE

PACKAGE #
SCALE:
FILENAME: OMFS-STD-SED020
CONTRACT No.: AE-0030-17
DATE: 2/27/2024

SOUND TRANSIT
PRELIMINARY ENGINEERING PLANS
OPERATIONS & MAINTENANCE FACILITY SOUTH
STRUCTURAL
AERIAL GUIDEWAY - SUPERSTRUCTURE
BEARING DETAILS

DRAWING No.: **STD-SED020**
FACILITY ID: S08
SHEET No.:
REV:

02/25/24 | 11:45 PM | VALENALV
C:\PWWORKING\WEST01\D2780553\OMFS-STD-SED020.DWG

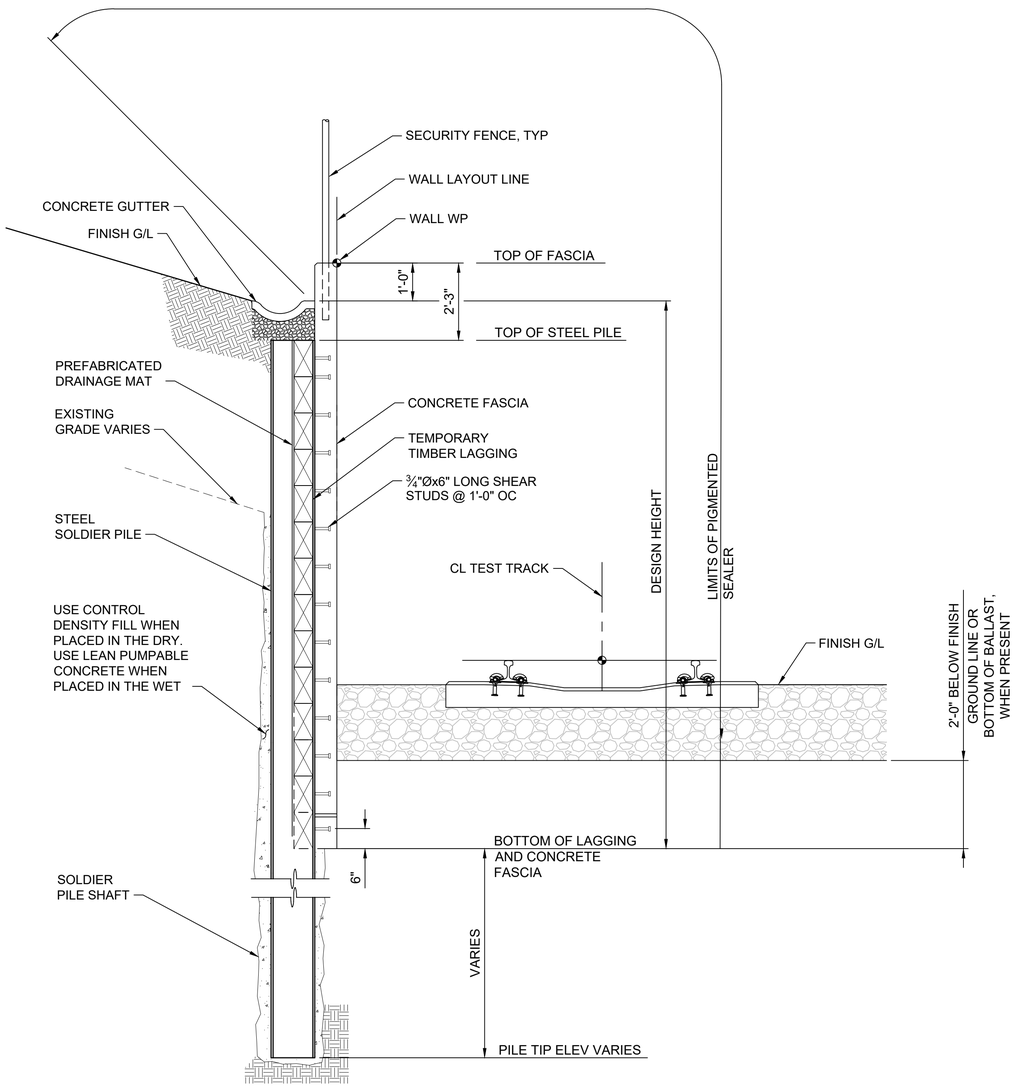

CUT WALL L7000 SECTION AT TEST TRACK

SCALE: 1/2" = 1'-0"

NOT FOR CONSTRUCTION

Refer to the plan set COVER drawing for disclaimers regarding this drawing.

REFERENCE CONCEPT DRAWINGS

No.	DATE	DSN	CHK	APP	REVISION

DESIGNED BY: B. ROGERS
DRAWN BY: A. VALENCIA
CHECKED BY: J. MERTH
APPROVED BY: B. HARRIS

AHJ:

PRELIMINARY

SUBMITTED BY: PABLO LOPEZ-HILFIKER
DATE: 2/27/2024
REVIEWED BY:
DATE:

LINE IS 1" AT FULL SCALE

PACKAGE #

SCALE:
FILENAME: OMFS-STD-SWX001
CONTRACT No.: AE-0030-17
DATE: 2/27/2024

SOUND TRANSIT
PRELIMINARY ENGINEERING PLANS
OPERATIONS & MAINTENANCE FACILITY SOUTH

STRUCTURAL
GUIDEWAY RETAINING WALL
CUT WALL AT TEST TRACK

DRAWING No.: **STD-SWX001**
FACILITY ID: S08
SHEET No.:
REV:

02/25/24 | 11:46 PM | VALENALV
C:\PWWORKING\WEST01\D2780553\OMFS-STD-SWX001.DWG

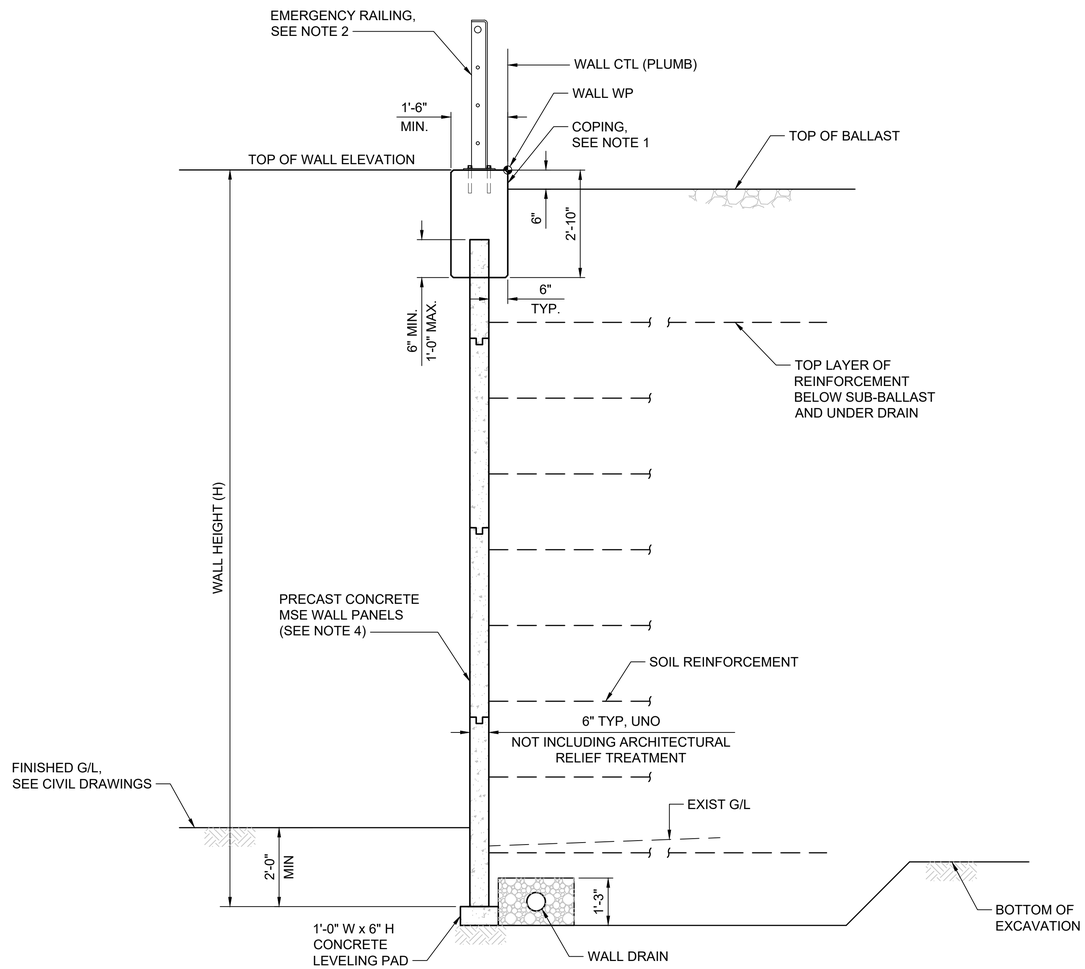

TYPICAL MSE WALL SECTION

SCALE: 1/2" = 1'-0"

NOTES:

1. FOR ACOUSTIC BARRIER OVER MSE WALL DETAIL, SEE DWG STD-SWD007. SEE NOISE WALL SCHEDULE ON DRAWING STD-SWS001 FOR ACOUSTIC BARRIER LOCATIONS.
2. EMERGENCY RAILING SHOWN. REFER TO SOUND TRANSIT CIVIL AND STRUCTURAL DIRECTIVE DRAWINGS.
3. WHERE SECURITY FENCE OCCURS INSTEAD, SEE DWG STD-SYD002.
4. WHERE MSE WALL PANEL TOTAL HEIGHT LESS THAN 6', USE CAST-IN-PLACE CONCRETE WALL DETAIL. SEE DWG STD-SWX004.

NOT FOR CONSTRUCTION

Refer to the plan set COVER drawing for disclaimers regarding this drawing.

REFERENCE CONCEPT DRAWINGS

No.	DATE	DSN	CHK	APP	REVISION

DESIGNED BY: B. HARRIS
DRAWN BY: A. VALENCIA
CHECKED BY: P. LI
APPROVED BY: B. HARRIS

AHJ:

PRELIMINARY

SUBMITTED BY: PABLO LOPEZ-HILFIKER
DATE: 2/27/2024
REVIEWED BY:
DATE:

LINE IS 1" AT FULL SCALE

PACKAGE #

SCALE:
FILENAME: OMFS-STD-SWX002
CONTRACT No.: AE-0030-17
DATE: 2/27/2024

SOUND TRANSIT
PRELIMINARY ENGINEERING PLANS
OPERATIONS & MAINTENANCE FACILITY SOUTH

STRUCTURAL
GUIDEWAY RETAINING WALL
TYPICAL MSE WALL

DRAWING No.: **STD-SWX002**
FACILITY ID: S08
SHEET No.:
REV:

02/25/24 | 11:47 PM | VALENALV
C:\PW\WORKING\WEST01\D2780553\OMFS-STD-SWX002.DWG

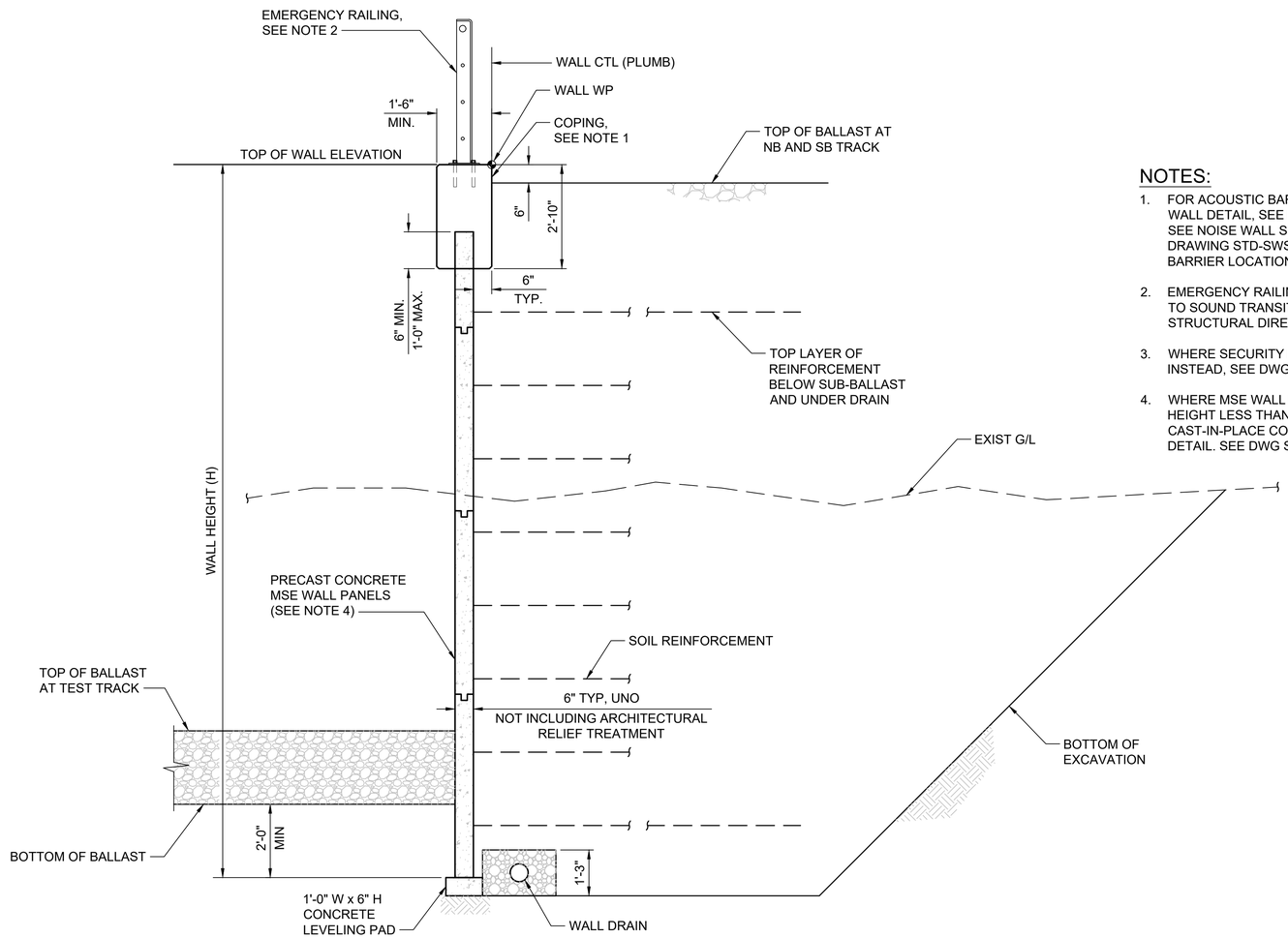

NOTES:

1. FOR ACOUSTIC BARRIER OVER MSE WALL DETAIL, SEE DWG STD-SWD007. SEE NOISE WALL SCHEDULE ON DRAWING STD-SWS001 FOR ACOUSTIC BARRIER LOCATIONS.
2. EMERGENCY RAILING SHOWN. REFER TO SOUND TRANSIT CIVIL AND STRUCTURAL DIRECTIVE DRAWINGS.
3. WHERE SECURITY FENCE OCCURS INSTEAD, SEE DWG STD-SYD002.
4. WHERE MSE WALL PANEL TOTAL HEIGHT LESS THAN 6', USE CAST-IN-PLACE CONCRETE WALL DETAIL. SEE DWG STD-SWX004.

MSE WALL SECTION BETWEEN NB TRACK AND TEST TRACK

SCALE: 1/2" = 1'-0"

NOT FOR CONSTRUCTION

Refer to the plan set COVER drawing for disclaimers regarding this drawing.

REFERENCE CONCEPT DRAWINGS

No.	DATE	DSN	CHK	APP	REVISION

DESIGNED BY: B. HARRIS
DRAWN BY: A. VALENCIA
CHECKED BY: P. LI
APPROVED BY: B. HARRIS

AHJ:

PRELIMINARY

SUBMITTED BY: PABLO LOPEZ-HILFIKER
DATE: 2/27/2024
REVIEWED BY:
DATE:

LINE IS 1" AT FULL SCALE

PACKAGE #

SCALE:
FILENAME: OMFS-STD-SWX003
CONTRACT No.: AE-0030-17
DATE: 2/27/2024

SOUND TRANSIT
PRELIMINARY ENGINEERING PLANS
OPERATIONS & MAINTENANCE FACILITY SOUTH

STRUCTURAL
GUIDEWAY RETAINING WALL
MSE WALL BETWEEN NB TRACK AND TEST TRACK

DRAWING No.: **STD-SWX003**
FACILITY ID: S08
SHEET No.: REV:

02/25/24 | 11:49 PM | VALENALV
C:\PWWORKING\WEST01\D2780553\OMFS-STD-SWX003.DWG

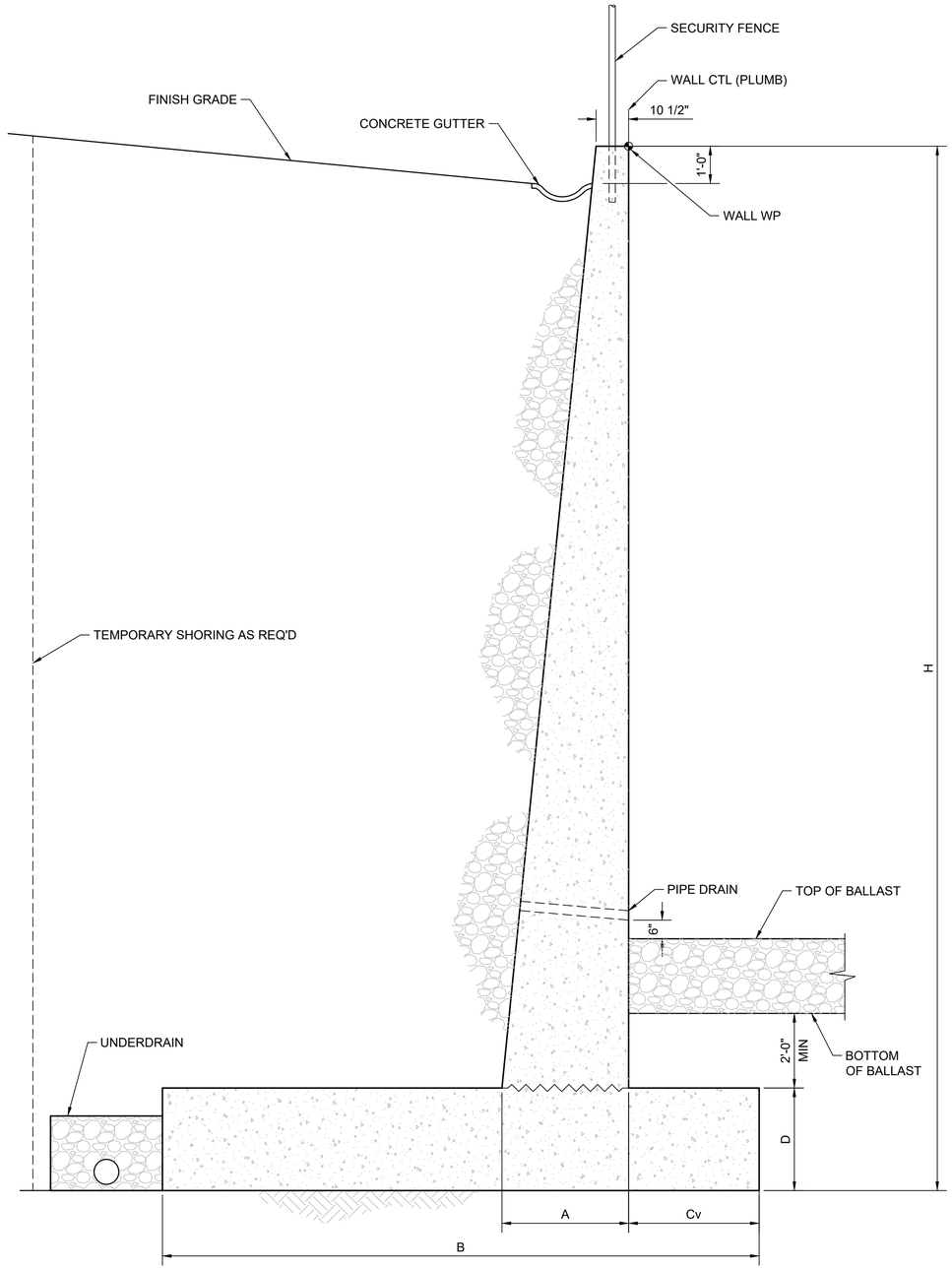

TYPICAL CONCRETE CANTILEVER WALL SECTION AT CUT (A / -)

NOTES:

1. WEEP HOLES SHALL BE 3-INCH DIAMETER PVC PIPE AT 8-FOOT ON CENTER.
2. SECURITY FENCE REQUIRED INSTEAD OF EMERGENCY RAILING WHEN DICTATED BY WALL HEIGHT. WHERE NOISE WALL SCHEDULE STD-SWS001 INDICATES AN ACOUSTIC BARRIER, SEE SOUND TRANSIT CIVIL / STRUCTURAL DIRECTIVE DRAWINGS FOR ACOUSTIC BARRIER DETAILS.

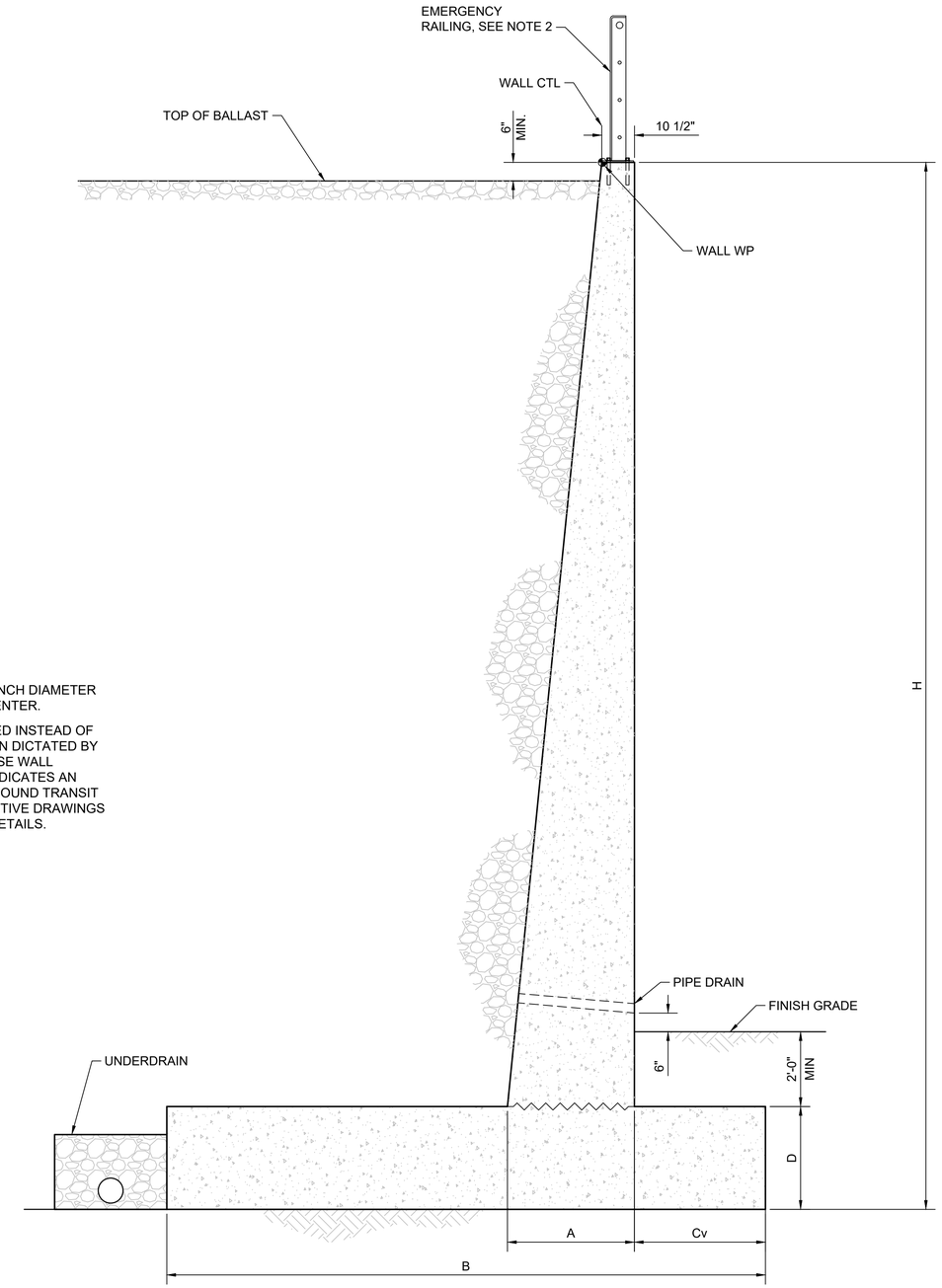

TYPICAL CONCRETE CANTILEVER WALL SECTION AT FILL (B / -)

NOT FOR CONSTRUCTION

Refer to the plan set COVER drawing for disclaimers regarding this drawing.

AHJ:

PACKAGE #

REFERENCE CONCEPT DRAWINGS

No.	DATE	DSN	CHK	APP	REVISION

DESIGNED BY: B. HARRIS
DRAWN BY: A. VALENCIA
CHECKED BY: P. LI
APPROVED BY: B. HARRIS

PRELIMINARY

SUBMITTED BY: PABLO LOPEZ-HILFIKER
DATE: 2/27/2024
REVIEWED BY:
DATE:

LINE IS 1" AT FULL SCALE

SCALE:
FILENAME: OMFS-STD-SWX004
CONTRACT No.: AE-0030-17
DATE: 2/27/2024

SOUND TRANSIT
PRELIMINARY ENGINEERING PLANS
OPERATIONS & MAINTENANCE FACILITY SOUTH

STRUCTURAL
GUIDEWAY RETAINING WALL
TYPICAL CONCRETE CANTILEVER WALL

DRAWING No.: **STD-SWX004**
FACILITY ID: S08
SHEET No.:
REV:

02/25/24 | 11:50 PM | VALENALV
C:\PWWORKING\WEST01\D2780553\OMFS-STD-SWX004.DWG

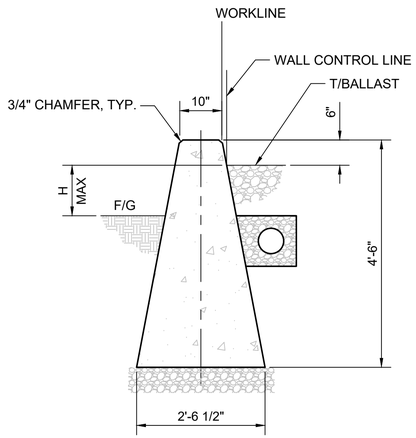

BALLAST WALL - TYPE A (A / -)

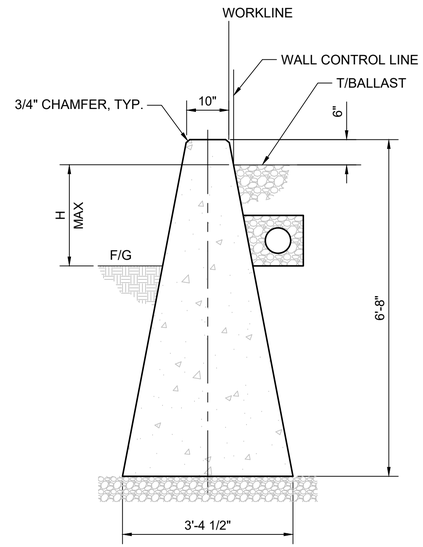

BALLAST WALL - TYPE B (B / -)

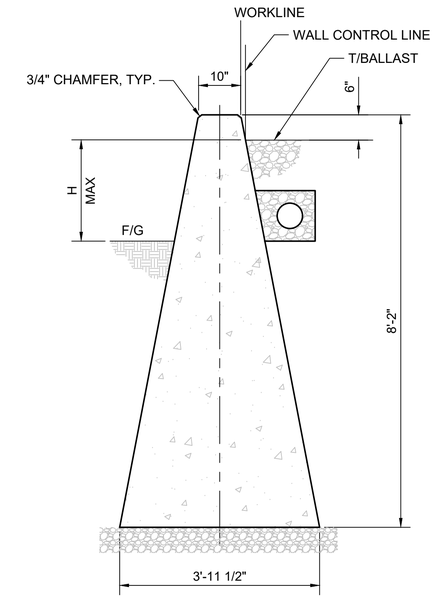

BALLAST WALL - TYPE C (C / -)

NOTES:

1. EMERGENCY RAILING OR FENCING ON TOP OF WALLS NOT SHOWN. SEE TRACK SECTIONS.
2. TYPES A, B, AND C NOT FOR USE WITH NOISE WALLS.
3. CONCRETE REINFORCING NOT SHOWN.

H (MAX)			
WALL TYPE	A	B	C
	CIP	CIP	CIP
CUT [1]	N/A	2'-6"	4'-0"
FILL [2]	1'-6"	2'-6"	4'-0"

1. CUT WALL ARE WHERE THE BALLAST IS NOT BEING RETAINED (BALLAST ON LOW SIDE).
2. FILL WALLS ARE WHERE THE BALLAST IS BEING RETAINED (BALLAST ON HIGH SIDE).
3. DETAILS SHOW FILL CONDITION. AT CUT CONDITION, H MAX IS MEASURED TO BOTTOM OF SUBBALLAST.

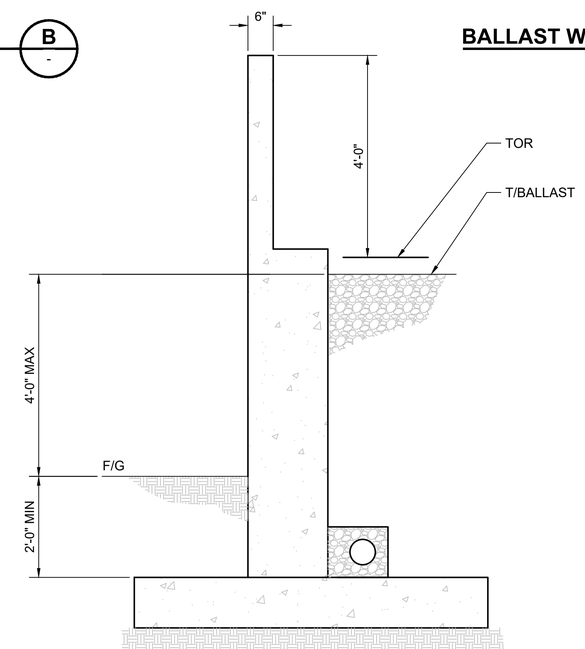

COMBINATION BALLAST WALL AND NOISE WALL (D / -)

NOT FOR CONSTRUCTION

Refer to the plan set COVER drawing for disclaimers regarding this drawing.

REFERENCE CONCEPT DRAWINGS

No.	DATE	DSN	CHK	APP	REVISION

DESIGNED BY: B. HARRIS
DRAWN BY: A. VALENCIA
CHECKED BY: P. LI
APPROVED BY: B. HARRIS

AHJ:

PRELIMINARY

SUBMITTED BY: PABLO LOPEZ-HILFIKER
DATE: 2/27/2024
REVIEWED BY:
DATE:

LINE IS 1" AT FULL SCALE

SCALE:
FILENAME: OMFS-STD-SWD001
CONTRACT No.: AE-0030-17
DATE: 2/27/2024

PACKAGE #

SOUND TRANSIT
PRELIMINARY ENGINEERING PLANS
OPERATIONS & MAINTENANCE FACILITY SOUTH

STRUCTURAL
GUIDEWAY RETAINING WALL
TYPICAL BALLAST WALLS

DRAWING No.: **STD-SWD001**
FACILITY ID: S08
SHEET No.:
REV:

02/25/24 | 11:52 PM | VALENALV
C:\PWWORKING\WEST01\D2780553\OMFS-STD-SWD001.DWG

NOISE WALL SCHEDULE				
STA.		HEIGHT (FT)	OFFSET SIDE	LOCATION
BEGIN	END			
SB 1508+00	SB 1515+87	4	RT	A
SB 1515+87	SB 1521+81	4	RT	C/R/C
SB 1521+81	SB 1524+50	4	RT	G
SB 1543+50	SB 1547+07	4	RT	R
SB 1547+07	L1 14+11	4	RT	A

NOTES:

1. ACOUSTIC BARRIER AND NOISE WALL LOCATIONS AND HEIGHTS ARE PRELIMINARY AND ARE FOR REFERENCE ONLY.
2. HEIGHTS LISTED ARE REQUIRED HEIGHTS ABOVE TOP OF RAIL.

LEGEND:

LOCATION "A" - ACOUSTIC BARRIER SYSTEM ON AERIAL STRUCTURE. SEE CIVIL/STRUCTURAL DIRECTIVE DRAWINGS DIR-SWD100 THROUGH DIR-SWD104
LOCATION "G" - COMBINATION BALLAST WALL / NOISE WALL. SEE DRAWINGS STD-SWD001
LOCATION "R" - ACOUSTIC BARRIER ON MSE RETAINING WALL. SEE DRAWING STD-SWD007
LOCATION "C" - ACOUSTIC BARRIER SYSTEM ON CONCRETE RETAINING WALL. SEE CIVIL / STRUCTURAL DIRECTIVE DRAWINGS DIR-SWD100 THROUGH DIR-SWD104

NOT FOR CONSTRUCTION

Refer to the plan set COVER drawing for disclaimers regarding this drawing.

REFERENCE CONCEPT DRAWINGS

No.	DATE	DSN	CHK	APP	REVISION

DESIGNED BY: B. HARRIS
DRAWN BY: A. VALENCIA
CHECKED BY: P. LI
APPROVED BY: B. HARRIS

PRELIMINARY

AHJ:

SUBMITTED BY: PABLO LOPEZ-HILFIKER
DATE: 2/27/2024
REVIEWED BY:
DATE:

LINE IS 1" AT FULL SCALE

PACKAGE #

SCALE:
FILENAME: OMFS-STD-SWS001
CONTRACT No.: AE-0030-17
DATE: 2/27/2024

SOUND TRANSIT
PRELIMINARY ENGINEERING PLANS
OPERATIONS & MAINTENANCE FACILITY SOUTH

STRUCTURAL
NOISE WALL
GUIDEWAY ACOUSTIC BARRIER AND NOISE WALL SCH.

DRAWING No.: **STD-SWS001**
FACILITY ID: S08
SHEET No.:
REV:

02/22/24 5:06 PM | VALENALV
C:\PWWORKING\WEST01\D2780553\OMFS-STD-SWS001.DWG

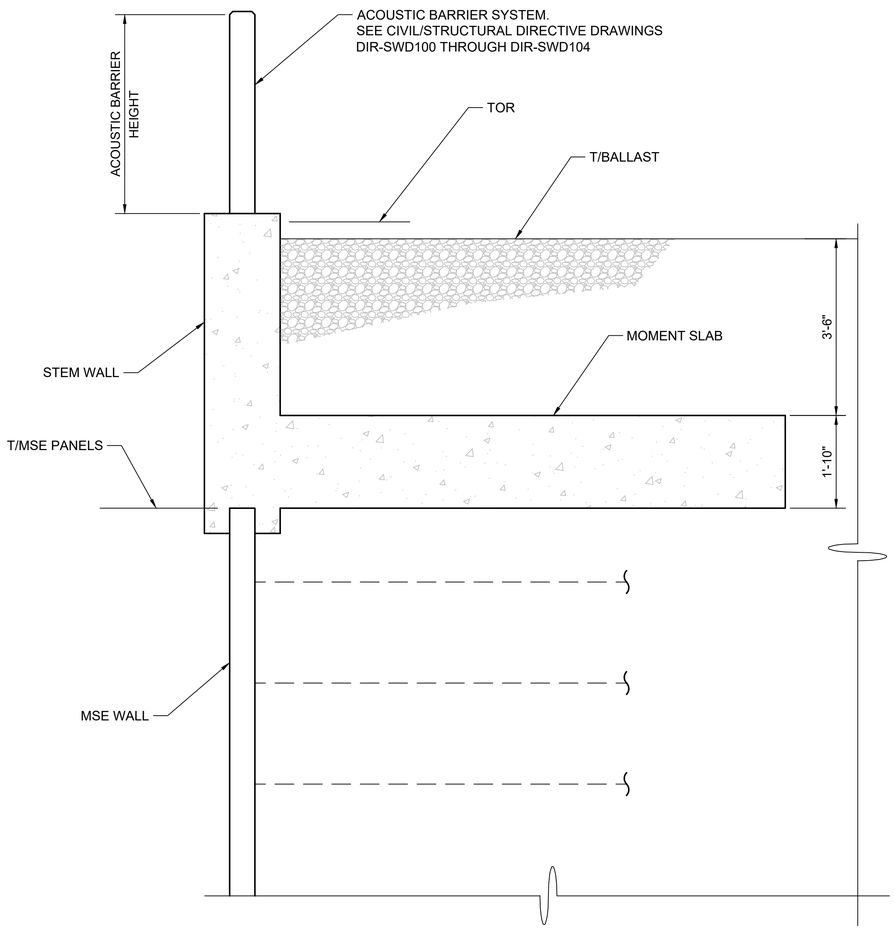

ACOUSTIC BARRIER SYSTEM OVER MSE WALL

SCALE: 1/2" = 1'-0"

NOT FOR CONSTRUCTION

Refer to the plan set COVER drawing for disclaimers regarding this drawing.

REFERENCE CONCEPT DRAWINGS

No.	DATE	DSN	CHK	APP	REVISION

DESIGNED BY: B. HARRIS
DRAWN BY: A. VALENCIA
CHECKED BY: P. LI
APPROVED BY: B. HARRIS

AHJ:

PRELIMINARY

SUBMITTED BY: PABLO LOPEZ-HILFIKER
DATE: 2/27/2024
REVIEWED BY:
DATE:

LINE IS 1" AT FULL SCALE

PACKAGE #

SCALE:
FILENAME: OMFS-STD-SWD007
CONTRACT No.: AE-0030-17
DATE: 2/27/2024

SOUND TRANSIT
PRELIMINARY ENGINEERING PLANS
OPERATIONS & MAINTENANCE FACILITY SOUTH

STRUCTURAL
NOISE WALL
ACOUSTIC BARRIER OVER MSE WALL DETAILS

DRAWING No.: STD-SWD007
FACILITY ID: S08
SHEET No.:
REV: 0

02/22/24 | 4:58 PM | VALENALV
C:\PWWORKING\WEST01\D2780553\OMFS-STD-SWD007.DWG