SOUNDTRANSIT

SOUND TRANSIT STANDARD SPECIFICATIONS

2024 EDITION

SOUNDTRANSIT

DISCLAIMER FOR
Design and Engineering Design Standards Documents

Sound Transit makes these documents available on an "as is" basis. By accepting receipt of the documents, the receiver agrees to the following:

- The documents are provided for information only;
- The receiver will not utilize the documents in any way that violates or infringes on Sound Transit's intellectual property rights in such documents;
- The provided documents should not be construed to represent formal design guidance and/or direction for any project;
- Sound Transit makes no representation or warranty that the provided data is complete, appropriate, or fit for any particular purpose, stated or otherwise;
- All documents provided by Sound Transit, including any revisions, shall remain the personal and intellectual property of Sound Transit; and
- To indemnify, defend, and hold harmless Sound Transit, its consultants, and agent(s) from any and all damages and claims arising from the receiver's use of these documents.

APPLICABILITY FOR
Design and Engineering Design Standards Documents

Project teams shall refer to their executed project contracts for applicable document versions/revisions.

SOUND TRANSIT STANDARD SPECIFICATIONS REVISION RECORD		
Document Title	**Date**	**Comments**
2018 Sound Transit Standard Specifications	1/15/2019	Initial Adoption
2024 Sound Transit Standard Specifications	3/29/2024	Initial Adoption

2024 ST STANDARD SPECIFICATIONS AMENDMENT RECORD			
Amendment No.	**Notice to Designer No.**	**Date**	**Comments**

FORWARD

This 2024 edition of the Sound Transit Standard Specifications has been developed to serve as the baseline for delivering and designing the projects for the public by Sound Transit. The Standard Specifications, unless otherwise stated in writing, will be incorporated into the Contract Documents, except where specifically excluded. The decision to exclude, modify or replace any standard specification is made during the design process and is subject to approval by Sound Transit.

While these specifications are to be used as a baseline during the design process, once they have been incorporated into the Contract Documents they become material and enforceable terms of that Contract. Following the completion of Issue For Bid or Issue For Construction documents, these Standard Specifications are subject to revision only through the change order process.

TABLE OF CONTENTS (WITH APPLICABILITY)

The table below denotes applicability of Sound Transit Standard Specifications to the transit systems or projects.

Section No.	Specification Title	Current Applicability					
		Light Rail	Commuter Rail	Bus Rapid Transit	URV	Garage	OMF
02 41 00	Demolition	X	X	X	X	X	X
03 05 15	Cement Concrete	X	X	X	X	X	X
03 11 00	Concrete Forming	X	X	X	X	X	X
03 15 00	Concrete Accessories	X	X	X	X	X	X
03 15 13	Waterstops	X	X	X	X	X	X
03 15 18	Elevated Guideway Expansion Joints	X	X	X	X	X	X
03 15 25	Anchorage to Concrete	X	X	X	X	X	X
03 20 00	Concrete Reinforcing	X	X	X	X	X	X
03 30 00	Cast-in-Place Concrete	X	X	X	X	X	X
03 30 13	Concrete Aerial Guideway Decking	X	X	X	X	X	X
03 30 23	Cast-in-Place Segmental Concrete Box Girder	X	X	X	X	X	X
03 35 00	Concrete Finishing	X	X	X	X	X	X
03 41 00	Precast Structures General	X	X	X	X	X	X
03 45 00	Precast Architectural Concrete	X	X			X	
03 62 00	Non-Shrink Grouting	X	X	X	X	X	X
04 21 13	Brick Masonry	X	X			X	
04 22 00	Concrete Unit Masonry	X	X	X	X	X	X
05 05 13	Shop-Applied Coatings for Metal	X	X			X	
05 05 23	Metal Fastenings	X	X	X	X	X	X
05 12 00	Structural Steel Framing	X	X	X	X	X	X
05 30 00	Metal Decking	X	X	X	X	X	X
05 40 00	Cold Formed Metal Framing	X	X	X	X	X	X
05 43 21	Metal Strut Framing System	X	X	X	X	X	X
05 52 00	Metal Railings	X	X			X	
05 52 30	Barrier Cable Systems	X	X	X	X	X	X
07 08 00	Commissioning of Building Enclosure	X	X	X	X	X	X
07 19 10	Water and Graffiti Repellents	X	X			X	X
07 92 00	Joint Sealants	X	X			X	X
08 08 00	Commissioning of Openings	X	X	X	X	X	X
08 11 13	Hollow Metal Doors and Frames	X	X	X		X	X
08 31 00	Access Doors and Panels	X	X	X		X	X
08 33 26	Overhead Coiling Grilles	X	X			X	X

Section No.	Specification Title	Current Applicability					
		Light Rail	Commuter Rail	Bus Rapid Transit	URV	Garage	OMF
08 36 20	Vertical Lift Doors	X	X			X	X
08 71 00	Door Hardware	X	X	X		X	X
08 80 00	Glazing	X	X	X		X	X
08 87 00	Glazing Surface Films	X	X	X		X	X
08 91 00	Louvers	X	X			X	X
09 21 16	Gypsum Board Assemblies	X	X	X		X	X
09 22 16	Non-Structural Metal Framing	X	X	X		X	X
09 67 25	Dielectric Epoxy Flooring	X					X
09 96 00	High-Performance Coatings	X	X	X		X	X
10 14 00	Signage	X	X	X		X	X
10 28 00	Toilet and Custodial Accessories	X	X	X		X	
10 44 00	Fire Protection Specialties	X	X	X		X	X
10 81 13	Bird Control Devices	X	X	X		X	X
11 08 00	Commissioning of Equipment	X	X	X	X	X	X
11 24 29	Facility Fall Protection	X	X	X		X	X
14 08 00	Commissioning of Conveying Equipment	X	X	X	X	X	X
14 21 00	Electric Traction Elevators	X	X	X		X	
14 24 00	Hydraulic Elevators	X	X	X		X	X
14 31 00	Escalators	X	X				
21 05 00	Common Work Results for Fire Suppression	X	X	X		X	X
21 05 17	Sleeves and Sleeve Seals for Fire Piping	X	X	X		X	X
21 08 00	Commissioning of Fire Suppression	X	X	X		X	X
21 11 00	Water-Based Fire Suppression Systems	X	X	X		X	X
22 05 00	Common Work Results for Plumbing	X	X	X	X	X	X
22 05 17	Sleeves and Sleeve Seals for Plumbing	X	X	X	X	X	X
22 05 50	Identification for Plumbing Piping and Equipment	X	X	X	X	X	X
22 08 00	Commissioning of Plumbing	X	X	X	X	X	X
22 13 16	Sanitary Waste and Vent Piping	X	X	X	X	X	X
23 05 00	Common Work Results for HVAC	X	X	X	X	X	X
23 05 17	Sleeves and Sleeve Seals for HVAC Piping	X	X	X	X	X	X
23 05 53	Identification for HVAC Piping and Equipment	X	X	X	X	X	X
23 08 00	Commissioning of HVAC Systems	X	X	X	X	X	X
23 41 00	Particulate Air Filtration	X	X	X	X	X	X
25 05 11	**TBD -** Cybersecurity for Integrated Automation (Operational Technology)	X	X	X	X	X	X
25 08 50	Commissioning of Facility Controls		X	X	X	X	X

Section No.	Specification Title	Current Applicability					
		Light Rail	Commuter Rail	Bus Rapid Transit	URV	Garage	OMF
25 08 60	Commissioning of Link Station Controls	X					
25 50 00	Integrated Automation Facility Controls		X	X	X	X	X
25 60 00	Integrated Automation Link Station Controls	X					
26 05 00	Common Work Results for Electrical	X	X	X	X	X	X
26 05 33	Raceway, Boxes, Hangers, and Supports for Electrical Systems	X	X	X	X	X	X
26 05 53	Identification for Electrical Systems	X	X	X	X	X	X
26 05 74	Overcurrent Protective Device, Short Circuit and Arc-Flash Studies	X	X	X	X	X	X
26 08 00	Commissioning of Electrical Systems	X	X	X	X	X	X
26 13 13	Medium-Voltage AC Circuit Breaker Switchgear	X	X	X	X	X	X
26 33 53	Uninterruptible Power Supply and Lighting Inverter	X	X	X	X	X	X
26 42 55	Track Resistance Testing	X					
27 11 16	Communications Houses, Cabinets and Racks	X	X	X	X	X	X
27 13 23	Systems Optical Fiber Cabling	X	X	X	X	X	X
27 15 02	Communications Conductors and Cables	X	X	X	X	X	X
27 15 13	Communications Copper Horizontal Cabling	X	X	X	X	X	X
27 17 00	Testing of Communications Copper Horizontal Cabling	X	X	X	X	X	X
27 21 29	Network Systems	X	X	X	X	X	X
27 60 01	**TBD** - Link Radio System	X				X	X
27 60 02	**TBD** - PSERN Radio System Interface	X				X	X
27 60 03	**TBD** - Garage Distributed Antenna System (DAS)	X	X			X	
27 60 07	**TBD** - Radio System Testing, Identification and Administration	X	X		X	X	X
27 80 00	Communication Reliability Program	X	X	X	X	X	X
28 08 10	Commissioning of Access Control System	X	X	X	X	X	X
28 08 31	Commissioning of Fire Detection and Alarm	X	X	X		X	X
28 31 00	Fire Detection and Alarm	X	X	X		X	X
31 11 00	Clearing and Grubbing	X	X	X	X	X	X
31 20 00	Earth Moving	X	X	X	X	X	X
31 23 01	Excavation Spoils Disposal	X	X	X	X	X	X
31 23 33	Trenching and Backfilling	X	X	X	X	X	X
31 32 36	Soil Nailing	X	X	X	X	X	X
31 63 00	Drilled Shaft Foundations	X	X	X	X	X	X
32 08 80	Commissioning of Exterior Improvements of Irrigation Systems	X	X	X	X	X	

Section No.	Specification Title	Current Applicability					
		Light Rail	Commuter Rail	Bus Rapid Transit	URV	Garage	OMF
32 11 23	Aggregate Base Courses	X	X	X	X	X	X
32 12 16	Asphalt Paving	X	X	X	X	X	X
32 12 83	Decomposed Granite Pavement	X	X	X	X	X	X
32 13 13	Concrete Paving	X	X	X	X	X	X
32 13 43	Pervious Concrete Paving	X	X	X	X	X	X
32 14 13	Precast Concrete Unit Paving	X	X	X	X	X	X
32 14 13.19	Permeable Interlocking Concrete Pavement	X	X	X	X	X	X
32 16 13	Concrete Curbs and Gutters	X	X	X	X	X	X
32 17 23	Pavement Markings and Raised Pavement Markers	X	X	X	X	X	X
32 31 13	Chain Link Fences and Gates	X	X	X	X	X	X
32 31 56	Steel Picket Fence and Gates	X	X	X	X	X	X
32 71 00	Wetland Mitigation	X	X	X			X
33 01 01	Maintenance of Existing Utilities	X	X	X	X	X	X
33 05 26	Utility Identification	X	X	X	X	X	X
33 11 00	Water Utility Distribution Piping	X	X	X	X	X	X
33 30 00	Sanitary Sewerage Utilities	X	X	X	X	X	X
33 40 00	Storm Drainage Utilities	X	X	X	X	X	X
33 40 10	Support for Storm Drainage Piping	X	X	X	X	X	X
33 46 00	Subdrainage	X	X	X	X	X	X
33 46 26	Storm Drainage Ponds, Detention Pipes and Vaults	X	X	X	X	X	X
33 49 00	Bioretention	X	X	X	X	X	X
33 71 17	Electrical Manholes and Vaults	X	X	X	X	X	X
34 05 17	Track Construction	X					X
34 11 13	Track Rails	X					X
34 11 16	Welded Track Rails	X					X
34 11 19	Track Rail Joints	X					X
34 11 23	Special Trackwork	X					X
34 11 26.13	Track Ballast	X					X
34 11 26.16	Track Subballast	X					X
34 11 30	Rail Grinding and Polishing	X					X
34 11 31	Concrete Cross Ties and Fasteners	X					X
34 11 36.13	Direct Fixation Fasteners	X					X
34 11 36.14	High-Resilient Direct Fixation Fasteners	X					X
34 11 62	Rail Lubricators	X					X
34 11 93	Track Appurtenances and Accessories	X					X

Section No.	Specification Title	Current Applicability					
		Light Rail	Commuter Rail	Bus Rapid Transit	URV	Garage	OMF
34 11 93.10	Bumping Post	X					X
34 21 10	Traction Electrification System General Requirements	X					X
34 21 16.11	Traction Power Substation Testing	X					X
34 21 16.15	Pad Mounted DC Disconnect Switches	X					X
34 21 16.17	Prefabricated Traction Power Substation Building	X					X
34 21 16.21	TPSS - Control Power	X					X
34 21 16.22	TES - DC Surge Arresters	X					X
34 21 16.23	TES Substation LCMS and IED	X					X
34 21 16.25	Traction Power Substation Installation	X					X
34 21 16.26	Transformer Rectifier Unit	X					X
34 21 16.27	Rail Voltage Monitoring and Grounding System	X					X
34 21 19.13	Traction Power Medium-Voltage AC Circuit Breaker Switchgear	X					X
34 21 19.16	DC Switchgear	X					X
34 21 27	Traction Power Metal Fabrication and Finishes	X					X
34 21 28	Traction Power DC Insulated Conductors and Cables	X					X
34 21 73	TES System Studies	X					X
34 21 74	TPSS Reliability Program	X					X
34 23 01	Overhead Contact System General Requirements	X					X
34 23 05	Overhead Contact System Pole Painting	X					X
34 23 13	Overhead Contact System Steel Poles	X					X
34 23 26	Overhead Contact System Assemblies, Components, and Conductors	X					X
34 23 27	Overhead Contact System Pole-Mounted Disconnect Switches	X					X
34 23 69	Overhead Contact System Testing	X					X
34 23 79	Overhead Contact System Capital Spare Parts and Maintenance Equipment	X					X
34 25 00	TPSS Capital Spare Parts and Maintenance Equipment	X					X
34 42 01	Signal System Design	X					X
34 42 02	Signal Block Design	X					
34 42 03	Interlocking Requirements	X					
34 42 04	Yard - Interlocking Requirements	X					X
34 42 07	Pre-Cast Concrete Foundation	X					X
34 42 08	External Signal Cable	X					X

Section No.	Specification Title	Current Applicability					
		Light Rail	Commuter Rail	Bus Rapid Transit	URV	Garage	OMF
34 42 11	Power Switch and Lock Movement Layouts	X					
34 42 13	Yard - Trailable Switch Operating Layouts	X					X
34 42 17	LRV Signal Layouts	X					
34 42 18	Audio Frequency Track Circuits	X					X
34 42 19	Power Frequency Track Circuits	X					X
34 42 20	Train-to-Wayside Communications Systems	X					X
34 42 30	Signals Rail Bonding	X					X
34 42 32	Existing Signal System Modifications	X					
34 42 35	Signal Power Distribution System	X					X
34 42 38	Wayside Enclosures	X					X
34 42 53	Instrument Racks	X					X
34 42 55	Internal Signal Cable	X					X
34 42 57	Plug Connectors	X					X
34 42 58	Relays	X					X
34 42 59	Signal Vital Processor	X					X
34 42 61	DC Power Supplies	X					X
34 42 65	Central Control Interface	X					
34 42 69	Local Control Panel	X					X
34 42 72	Event Recorders	X					X
34 42 93	Electromagnetic Compatibility	X					X
34 42 95	Signals Reliability Program	X					X
34 42 98	Signal System Testing	X					X
34 42 99	Signal System Technical Support	X					X

SECTION 02 41 00

DEMOLITION

PART 1 - GENERAL

1.01 SUMMARY

A. Section includes:

1. Requirements for demolition, removal, and disposal of surface and subsurface structures, and related ancillary components.

a. Work must include removal, relocation and disposal of all existing materials and equipment as indicated on the issued for Construction Drawings and as needed for a complete installation of all improvements. Variations must be reported to the Resident Engineer.

b. Work must include shut-off, disconnection and removal of mechanical, plumbing, HVAC, and fire protection systems and equipment and building electrical systems from existing tunnels and buildings, including those in WSDOT facilities.

c. Work must include rodent/pest control.

d. Surveys must be in accordance with Migratory Bird Treaty Act (MBTA).

2. Abatement and disposal of Hazardous and Contaminated Substances must be in accordance with the Contract and local, state, and federal regulations.

1.02 REFERENCES

A. This Section incorporates by reference the latest revisions of the following documents:

1. Authority Having Jurisdiction (AHJ):

a. Standard plans and specifications.

2. American National Standards Institute (ANSI):

a. ANSI A10.6 Safety and Health Program Requirements for Demolition Operations.

3. Washington State Department of Transportation (WSDOT):

a. Standard Specifications for Road, Bridge, and Municipal Construction.

4. Washington Administrative Code (WAC):

a. WAC 296-155 “Safety Standards for Construction Work”, Part S “Demolition”.

5. U.S. Fish and Wildlife Service:

a. Migratory Bird Treaty Act (MBTA) 1918.

B. Definitions:

1. Structure: Facilities including but not limited to buildings, bridges, walls, slabs, beams, foundations, footings, piles, foundation systems, drainage structures, loading docks, stairs, and canopies.

2. Asphalt Concrete Pavements: Streets, driveways, alleyways, or other surfaces constructed from bituminous mix, or any combination of bituminous mixes or surface treatments.

3. Concrete Pavements: Streets, driveways, alleyways, or other slabs greater than six inches in thickness, constructed from Portland Cement Concrete, including those constructed with or without an asphaltic overlay.

4. Concrete Sidewalks: Concrete slabs six inches or less in thickness, with or without asphaltic overlay, also including curbs, gutters and ramps.

1.03 COORDINATION

A. Contractor must hold a preconstruction meeting to discuss the approved Construction Work Plan (CWP). The CWP must address hold points, schedule of work and related approved submittals.

B. Prior to commencing any work, Contractor must provide minimum of 30 days notice to schedule meeting(s) with Resident Engineer to discuss the work plan and schedule.

C. Contractor must obtain required permit(s) for the work from AHJ.

1.04 SUBMITTALS

A. Submit:

1. Demolition and Removal Construction Work Plan:

a. Work Plan must include the following:

1) Demolition schedule, including timing for utility disconnects and durations of parking lot or roadway and traffic impacts.

2) As-Built Drawing(s) of surveyed locations and depths of disconnected utilities, walls, and foundations left on site as required by the Contract.

3) Description and shop drawings of method and sequence of demolition and removal for all stages.

4) Description of equipment types to be used in all demolition and removal operations.

5) Description of method and equipment to be used for containment, collection, salvage, recycling, or disposal of all debris.

6) Description of haul routes and access points.

7) Location of approved disposal sites.

8) Field measurements of items and members of the existing structure prior to preparing shop drawings for concrete elements.

9) Plans and calculations for false works, prepared by a registered Professional Engineer in the State of Washington, to be used for the demolition of existing structures.

10) Temporary storage location for rail scheduled to be removed or reused as guardrail.

11) Description of cleanup and site restoration methods.

12) Survey plan coordination for Migratory Bird Treaty Act (MBTA) work and schedule as identified in this Section.

13) Plan for response, characterization, managing and disposal of Known and Unknown Hazardous or Contaminated Substances including but not limited to Hazardous Building Materials and Hazardous or Contaminated Substances associated with utilities such as asbestos cement pipe/or and sediment/sludge remaining in utility pipes, catch basins or sumps.

14) Plan to confirm Hazardous Building Material Certificate of Clearance as required by the Contract, is complete prior to beginning demolition.

2. Final Demolition Examination Report:

B. Transmit:

1. Waste Management Progress Reports.

2. Utility Severance Certificates.

3. Rodent Control Inspection and Extermination Statement:

a. After initial treatment, submit a statement signed by the pest control operator.

b. For each follow-up inspection, report the types and amount of baits placed in each location.

c. State the visible results obtained from the rodent control program.

4. Letter verifying re-establishment of survey markers and monuments, signed by a land surveyor licensed in the State of Washington.

5. Private Property Owner's Release: If material demolished and removed from the site will be deposited on private property, submit two copies of written releases to the Resident Engineer. Releases must absolve Sound Transit from responsibility concerning the depositing of material on private property, and the owners of the property must sign releases on which the material will be deposited.

1.05 QUALITY ASSURANCE

A. The issued for Construction Drawings are produced from original as-built drawings and field observations. The issued for Construction Drawings may not fully represent an accurate as-built condition. The issued for Construction Drawings of existing conditions are for Contractor's general reference and orientation. Discrepancies may be encountered. Contractor must carefully examine and field verify all conditions, including extent of materials remaining in buildings on site. Contractor must give attention and protection to existing structures, utilities, and equipment that are to remain.

B. It is solely the Contractor's responsibility to determine demolition procedures and sequences to ensure the safety of operation. This may include the use of temporary shoring or bracing. If during demolition, damages are made to structures or utilities, Contractor must perform repair and restoration promptly at no cost to owner.

PART 2 - PRODUCTS

2.01 MATERIALS, EQUIPMENT, AND FACILITIES

A. Products for patching, extending, and matching must be the same types as those used in existing facility, and in accordance with AHJ requirements.

PART 3 - EXECUTION

3.01 EXAMINATION

A. Prior to beginning demolition, Contractor must make a complete inspection of the project conditions, including existing visible defects. Visible defects must be photographed and logged by the Contractor and verified by the Resident Engineer.

B. Perform surveys and potholes to locate existing drainage and utilities. Contractor must prepare Construction Drawings to depict existing utilities. Protect existing utilities and drainage to remain from damage.

C. Survey for Migratory Bird Treaty Act (MBTA):

1. Submit a request to Sound Transit for survey in accordance with Migratory Bird Treaty Act (MBTA), if the construction work commences during nesting season. Nesting season may vary due to weather conditions and must be confirmed prior to any construction work commences:

a. If the construction work commences outside of nesting season, survey for Migratory Bird Treaty Act (MBTA) is not required. Contractor must verify with Sound Transit Environmental team and confirm the requirements for survey prior to commencing any construction work.

b. Request all surveys a minimum of two (2) months prior to demolition work:

1) Surveys must occur within one (1) week prior to any demolition activities and additional surveys as required by permitting agencies.

c. Sound Transit will provide written approval to commence demolition if MBTA survey is complete and does not require any additional coordination:

15) If MBTA bird species are present in the demolition area, Contractor must not commence any work until Sound Transit provides written approval to commence work.

D. Existing Structures and utilities may contain Hazardous or Contaminated Substances including asbestos, lead, PCBs, mercury, and other hazardous substances. It is the Contractor's responsibility to characterize and dispose of Hazardous or Contaminated Substances in accordance with the Contract and local, state, federal regulations.

3.02 PREPARATION

A. Rodent/Pest Control Inspection and Extermination:

1. Secure a registered sanitarian in the State of Washington to conduct a survey for evidence of current rodent/pest activity.

2. Initiate a control program by a health department certified pest control operator, if the survey indicates that it is necessary. The control program must include the following minimum requirements:

   a. At least 10 days before demolition begins, purge the work area of rodents and prevent their migration to adjacent areas. Maintain rodent-free state for three months. As directed by the Resident Engineer, execute rodent control and extermination within a one-block radius of the work area, with the permission of property owners or tenants.

   b. Place required and approved quantity of toxic bait by the pest control operator in the form of paraffinized block, in each manhole or storm drain inlet located on the same street as the facility (to be demolished), as well as at its closest intersection(s). Additional baits must be placed, as determined by the pest control operator.

   c. Where there is no competing water supply, use liquid anticoagulant baits at the discretion of the certified pesticide applicator.

   d. Inspect toxic baits and renew as necessary on the fourth or fifth day after initial baiting, and every seven days thereafter.

   e. Remove and dispose of rodent carcasses in sealed plastic bags.

   f. Submit a statement signed by the pest control operator, after the initial treatment. For each follow-up inspection, report the types and amount of baits placed in each location; state the visible results obtained from the rodent control program.

   g. Remove bait blocks upon completion of project.

B. Salvage:

1. Sound Transit will perform salvage of limited landscaping materials and building interior materials such as trim, interior doors, appliances, plumbing fixtures and light fixtures prior to Notice to Proceed for the Contract. Salvage operations must be performed under a separate contract with Sound Transit. Remove any items remaining in the buildings as part of the demolition work.

2. Remove additional salvage items that don’t impact structural integrity for salvage prior to demolition include the following:

   a. Copper.

   b. Glu-lam beams.

   c. Vertical timbers.

   d. Wood decking.

   e. Structural beams.

f. Porch columns.

g. Exterior windows.

h. Vinyl windows.

i. Exterior doors.

j. Granite.

k. Brick.

l. Elevator equipment.

C. Install temporary chain link fencing to secure all work areas, as indicated on the issued for Construction Drawings.

D. Remove trees, shrubs, and other vegetation within construction limits, except those identified to be protected in the Contract.

E. Protect trees and shrubs outside of construction limits and street trees within construction limits.

3.03 DEMOLITION OPERATIONS

A. Perform demolition in accordance with the approved Demolition and Removal Construction Work Plan. Use methods within limitations of governing regulations. Demolition must be done safely and must avoid damaging any portions of the Structure that are to remain. Observe Federal, local and state codes, including WAC 296-155 “Safety Standards for Construction Work”, Part S “Demolition”, at all times. The Contractor must review all Construction Drawings of the existing Structure noted in the Contract.

B. Exercise pollution controls as specified in the Contract.

C. Demolish and remove existing construction only to the extent required by Construction Drawings.

D. Cut demolition lines and openings true to dimensions required. Use cutting methods that minimize damage and disturbance to remaining construction. Provide temporary covers over openings.

E. Cut or drill from the exposed or finished side into concealed surfaces to avoid marring existing finished surfaces.

F. Do not use cutting torches until work area is cleared of flammable materials. Verify condition and contents within concealed spaces, such as ducts and pipes, before starting flame-cutting operations. Maintain ventilation and keep portable fire-suppression devices nearby, during flame-cutting operations.

G. Do not use explosives.

H. Perform demolition by means that protect the public, workers, and existing materials.

I. Remove and lower framing members to ground, by means to prevent free fall, ground impact, and dust generation.

J. Avoid overloading existing construction when placing demolition equipment and removing debris.

K. Completely fill abandoned pipes with Controlled Density Fill (CDF) in accordance with AHJ and manufacturer requirements. CDF must meet the requirements of WSDOT Standard Specifications for Road, Bridge and Municipal Construction.

L. Abandon catch basins, valve chambers, manholes, oil water separators, sumps, vaults, septic tanks, and inlets as shown on the plans in accordace with AHJ requirements and WSDOT Standard Spec Section 7-05.3(2).

M. When Hazardous or Contaminated Substances are encountered during demolition operations, comply with applicable regulations, laws, and ordinances concerning removal, handling, disposal, and protection against exposure to environmental pollution.

3.04 REMOVAL

A. Except for items or materials indicated in the Waste Management Plan to be reused, salvaged, recycled, reinstalled, or otherwise indicated to remain Sound Transit's property, Contractor must remove and transport demolished materials from Work site and legally dispose:

1. Do not allow demolished materials, including those to be salvaged, recycled, or disposed to accumulate on site. Remove materials from building and work site regularly, so their presence will not create unsafe conditions for workers and the public.

2. Comply with AHJ requirements regarding handling, removal, hauling, and disposal of materials.

3. Prevent spillage during removal and transporting of materials.

4. Do not burn or bury materials.

B. Except for items indicated for salvage or reuse, material removed become the Contractor’s property and must be removed from the Site before completion of project.

3.05 RESTORATION

A. When non-scheduled items are demolished or removed, replace items as directed by the Resident Engineer.

B. Repair and restore damaged facilities, caused by demolition and operation, to their original conditions or better.

C. Backfill and level depressions caused by demolition and operation. Grade ground surface as indicated on the issued for Construction Drawings and eliminate water pockets.

D. Remove temporary chain link fencing, barriers, and safety guards upon completion of work.

3.06 FIELD QUALITY CONTROL

A. At completion of demolition, the Contractor must make examination of exposed components and possible damage caused by demolition work. Submit Final Examination report to the Resident Engineer for approval.

3.07 CLEANING

A. Maintain a clean and orderly work site.

B. Clean adjacent facilities; remove dust, dirt, and debris caused by demolition operations. Return adjacent facilities to previously existing or better condition, prior to demolition operations.

3.08 PROTECTION

A. Protect remaining work and adjacent facilities from damage. Do not interfere with neighboring buildings, facilities, or activities.

B. Provide bracing and shoring to maintain the stability of existing facilities and construction.

C. Provide barriers, safety guards, and warning lights near openings and depressions. Operate warning lights from dusk to dawn daily.

D. Provide environmental protection as required by the Contract and local, state and federal regulations to prevent refuse, dust and waste from entering waterways, air or utility drains.

E. Preservation of Reference Markers:

1. Record the locations and designation of survey markers and monuments, prior to their removal. Provide three reference points for each survey marker and monument removed. Establish reference points by a land surveyor licensed in the State of Washington.

2. Store and protect removed markers and monuments during demolition work. Replace and re-establish survey markers and monuments in conformance with the recorded reference points, upon completion of work.

F. Protection of Utilities:

1. Protect utilities from damage caused by settlement, lateral movement, undermining, washout, and other hazards created by the demolition operations.

2. Arrange for and verify temporary termination of utility services encountered and as indicated on issued for Construction Drawings, in conformance with AHJ.

3. If utility is damaged, immediately notify the Resident Engineer and the utility owner for corrective action.

END OF SECTION

SECTION 03 05 15

CEMENT CONCRETE

PART 1 - GENERAL

1.01 SUMMARY

A. Section includes:

1. Requirements for materials, proportioning, production, and delivery of Portland cement or hydraulic cement concrete.

1.02 REFERENCES

A. This Section incorporates by reference the latest revisions of the following documents:

1. American Association of State Highway and Transportation Officials (AASHTO).

a. AASHTO LRFD Bridge Design Specifications.

b. AASHTO M 240M/ M 240 Standard Specification for Blended Hydraulic Cement.

2. American Concrete Institute (ACI):

a. ACI 121R Guide for Concrete Construction Systems Quality in Conformance with ISO 9001.

b. ACI 211.1 Standard Practice for Selecting Proportions for Normal, Heavyweight, and Mass Concrete.

c. ACI 301 Specifications for Structural Concrete.

d. ACI 304R Guide for Measuring, Mixing, Transporting, and Placing Concrete.

e. ACI 304.2R Guide to Placing Concrete by Pumping Methods.

f. ACI 305R Guide to Hot Weather Concreting.

g. ACI 318 Building Code Requirements for Structural Concrete and Commentary.

h. ACI SPEC-306.1 Standard Specification for Cold Weather Concreting.

i. ACI CODE-318 Building Code Requirements for Structural Concrete and Commentary.

3. American Society for Testing and Materials (ASTM) International:

a. ASTM C33/C33M Standard Specification for Concrete Aggregates.

b. ASTM C40/C40M Standard Test Method for Organic Impurities in Fine Aggregates for Concrete.

c. ASTM C88/C88M Standard Test Method for Soundness of Aggregates by Use of Sodium Sulfate or Magnesium Sulfate.

d. ASTM C94/C94M Standard Specification for Ready-Mixed Concrete.

e. ASTM C114 Standard Test Methods for Chemical Analysis of Hydraulic Cement.

f. ASTM C127 Standard Test Method for Density, Relative Density (Specific Gravity), and Absorption of Coarse Aggregate.

g. ASTM C128 Standard Test Method for Density, Relative Density (Specific Gravity), and Absorption of Fine Aggregate.

h. ASTM C131/C131M Standard Test Method for Resistance to Degradation of Small-Size Coarse Aggregate by Abrasion and Impact in the Los Angeles Machine.

i. ASTM C136/C136M Standard Test Method for Sieve Analysis of Fine and Coarse Aggregates.

j. ASTM C150/C150M Standard Specification for Portland Cement.

k. ASTM C157 Standard Test Method for Length Change of Hardened Hydraulic-Cement Mortar and Concrete.

l. ASTM C227 Standard Test Method for Potential Alkali Reactivity of Cement-Aggregate Combinations (Mortar-Bar Method).

m. ASTM C260/C260M Standard Specification for Air-Entraining Admixtures for Concrete.

n. ASTM C289 Standard Test Method for Potential Alkali-Silica Reactivity of Aggregates (Chemical Method).

o. ASTM C494/C494M Standard Specification for Chemical Admixtures for Concrete.

p. ASTM C535 Standard Test Method for Resistance to Degradation of Large-Size Coarse Aggregate by Abrasion and Impact in the Los Angeles Machine.

q. ASTM C595/C595M Standard Specification for Blended Hydraulic Cements.

r. ASTM C618 Standard Specification for Coal Fly Ash and Raw or Calcined Natural Pozzolan for Use in Concrete.

s. ASTM C989/C989M Standard Specification for Slag Cement for Use in Concrete and Mortars.

t. ASTM C1012 Standard Test Method for Length Change of Hydraulic-Cement Mortars Exposed to a Sulfate Solution.

u. ASTM C1017/C1017M Standard Specification for Chemical Admixtures for Use in Producing Flowing Concrete.

v. ASTM C1116/C1116M Standard Specification for Fiber-Reinforced Concrete.

w. ASTM C1240 Standard Specification for Silica Fume Used in Cementitious Mixtures.

x. ASTM C1602/C1602M Standard Specification for Mixing Water Used in the Production of Hydraulic Cement Concrete.

y. ASTM E329 Standard Specification for Agencies Engaged in Construction Inspection, Testing, or Special Inspection.

4. National Ready Mixed Concrete Association (NRMCA):

a. NRMCA Quality Control Manual, Section 3: Plant Certification Checklist.

5. Washington State Department of Transportation (WSDOT):

a. WSDOT Standard Specifications for Road, Bridge and Municipal Construction (WSDOT Standard Specification).

6. BS EN 12390-8 Testing Hardened Concrete Depth of Penetration of Water Under Pressure.

B. Definitions:

1. Concrete Mix: Preparations of mix and proportions of cement, water, aggregates, air, and supplementary materials required for a required strength and durability are as shown on the Issued for Construction Documents. Each mix is designated to have one or more uses. Furnish a separate mix design for each concrete mix.

2. Mass Concrete: Section 03 30 00 - Cast-In-Place Concrete.

3. Supplementary Cementitious Materials: Fly Ash, Slag, and Silica Fume.

4. Total Cementitious Materials: The amount of Portland cement plus the amount of all supplementary cementitious materials.

5. Water Cement (W/CM) Ratio: The ratio of water to total cementitious materials by weight.

1.03 SUBMITTALS

A. Submit:

1. Concrete Mix Designs: For each concrete mix submit a concrete mix design. Include the following as a minimum:

a. Supplier, mix design number, and plant location.

b. Proposed use and locations.

c. Mix constituents, including:

1) Cement: Supplier, source, type, and specific gravity.

2) Supplementary Cementitious Materials: Supplier; source; type, class or grade; and specific gravity.

3) Coarse Aggregate: Supplier, source, grading, type, and specific gravity.

4) Fine Aggregate: Supplier, source, grading, type, and specific gravity.

5) Admixtures: Manufacturer, product, and type.

6) Micro synthetic, macro synthetic, and steel fibers

7) Water: Source of supply.

d. Mix constituent proportions per cubic yard, including weight or dose and absolute volume.

e. Mix constituent ratios, including water to total cementitious material ratio by weight and Supplemental cementitious material to total cementitious material ratio by weight.

f. Concrete mix properties, including:

1) 28-day or 56-day compressive strength, as applicable.

2) Unit weight.

3) Slump.

4) Percent entrained air.

g. Statistical analysis determining the required average compressive strength in conformance with ACI 301.

h. Documentation of average compressive strength in conformance with ACI 301:

1) If field test data are used, all data must be supported by an Independent Testing Laboratory's report.

2. Sample Test and Analysis reports listed under Source Quality Control

3. Concrete Quality Program Plan: Conform to Issued for Construction Documents, including truck-mixing plan.

B. Transmit

1. Placement records describing concrete mix design, delivery, and placement information.

2. Concrete Inspection Records

3. Admixtures:

a. For each admixture, transmit the following:

b. Manufacturer's product data showing conformance.

1) Manufacturer's published instructions for storage, handling, and use.

2) Material Safety and Data Sheets.

3) Manufacturer's certification that admixture is compatible with all other admixtures used in the mix design.

4) Water based Hydrophobic admixture manufacturer's standard warranty.

4. Micro synthetic, macro synthetic, and steel fibers:

   a. Manufacturer's product data showing conformance.

   b. Manufacturer's published instructions for storage, handling, and use.

   c. Material Safety and Data Sheets.

5. Material Certification:

   a. For each material, submit supplier's certification that the materials conform to the requirements of this Section.

6. Qualifications:

   a. Concrete supplier.

7. Concrete Mix Environmental Product Declaration (EPD) Calculation:

   a. For a minimum of 90 percent by volume of the cast-in-place concrete mix designs, transmit Environmental Product Declarations in accordance with The Carbon Leadership Forum Product Category Rules (PCR) for ISO 14025 Type III Environmental Product Declarations (EPDs) for Concrete. The information to be based on the pour logs. Transmit updated reports at least at approximately 25 percent, 50 percent, 75 percent and 100 percent of the total volume of the cast-in-place concrete to be used in the project.

   b. Calculate the NRMCA Pacific Northwest Region Benchmark Average Global Warming Potential (GWP) for the volume of concrete with EPDs and use the latest version of ST Lower Carbon Concrete Tracker spreadsheet to report EPD calculation. The calculation must include:

      1) A list of all classes of concrete used in the project. A class of concrete is determined by the 28-day compressive strength (i.e. 3000 psi concrete, 4000 psi concrete and etc.).

      2) A list of the projected volume of each class of concrete used in the project. The total volume reported must match the total volume of concrete listed in the Mix Design average GWP calculations.

      3) A list of the GWP for each class of concrete for the Pacific Northwest Region as reported in the NRMCA Member National and Regional Life Cycle Assessment Benchmark (Industry Average) Report, dated October 2014. These regional averages are as follows:

Indicator / LCI Metric Unit (equivalent)		Global Warming Potential (GWP) kg CO2
2500 psi Concrete	per yd^3	199.92
3000 psi Concrete	per yd3	222.58
4000 psi Concrete	per yd3	272.33
5000 psi Concrete	per yd3	336.67
6000 psi Concrete	per yd3	354.66
8000 psi Concrete	per yd3	432.99

NOTES - Regional Averages of GWP (from list above)

a) Interpolation is permitted to determine GWP values for concrete classes between the values shown in the table.

b) Where a concrete class has a lower 28-day strength than 2500 psi, use the following equations to determine the Benchmark GWP:

c) GWP = 199.92 - [2500 psi - 28-day strength (psi)] x 0.045 per yd3

d) Where a concrete class has a higher 28-day strength than 8000 psi, use the following equations to determine the Benchmark GWP:

e) GWP = 432.99 + (28-day strength (psi) – 8000 psi) x 0.039 per yd3

4) Calculate the weighted average NRMCA Pacific Northwest Region Benchmark GWP for the volume of concrete corresponding to the Mix Designs with EPDs as follows:

$$GWP_{AVG} = \frac{\sum_{i=1}^{n}[GWP_i \times Volume_i]}{\sum_{i=1}^{n} Volume_i}$$

Where:

GWP_i = global warming potential for concrete class i.

$Volume_i$ = projected volume of concrete for concrete class i.

n = total number of classes of concrete.

c. Calculate the weighted average Mix Design GWP for the volume of concrete with EPDs. The calculation must include:

1) A list of all mixes used on the project. This list includes the supplier, mix design number, supply plant location, EPD Program Operator, EPD Developer, EPD issue date, and EPD expiration date for every mix.

2) A list of the projected volume of each mix used on the project. The total volume reported matches the total volume of concrete listed in the NRMCA Pacific Northwest Region Benchmark average GWP calculations.

3) A list of GWP, as shown on the mix's EPD, for each mix.

4) Calculate the Mix Design average GWP as follows:

$$GWP_{AVG} = \frac{\sum_{i=1}^{n}[GWP_i \times Volume_i]}{\sum_{i=1}^{n} Volume_i}$$

Where:

GWP_i = global warming potential for mix i.

$Volume_i$ = projected volume of concrete for mix i.

n = total number of mixes of concrete.

d. Calculate the percent reduction in Mix Design average GWP as compared to the NRMCA Pacific Northwest Region Benchmark average GWP.

1.04 QUALITY ASSURANCE

A. Concrete Supplier: Select a concrete supplier holding a current Certificate of Conformance for Concrete Production Facilities from the National Ready Mix Concrete Association.

B. Concrete Quality Program Plan: Develop a Quality Program Plan in conformance with ACI 121R.

C. Independent Inspection and Testing Laboratory: In conformance with ASTM E329.

1.05 DELIVERY, STORAGE, AND HANDLING

A. Cementitious Materials: Store in dry, weather-tight buildings, bins, or silos that exclude contaminants.

B. Coarse and Fine Aggregates: Store to prevent segregation and contamination from other materials or other gradations or types of aggregate. Store to drain freely. Do not use frozen aggregate.

C. Admixtures: Store and handle in conformance with manufacturer’s published instructions.

D. Micro synthetic, macro synthetic and steel fibers: Store and handle in conformance with manufacturer’s published instructions.

E. Water: Protect from contamination.

PART 2 - PRODUCTS

2.01 LEED COMPLIANCE

A. Refer to Article 1.03.B.5, herein.

2.02 MATERIALS

A. General: For each material:

1. Use only one source in each mix design.

2. If source changes, submit a revised mix design using the product from the new source.

3. Do not change source for an approved mix design without written approval by Resident Engineer.

B. Cementitious Materials:

1. Portland Cement: ASTM C150/ C150M.

2. High early strength cements must not be used in mass concrete.

3. Portland Limestone Cement: ASTM C595

a. Do not use Type 1L in post tensioned and pre-stressed concrete elements that are designed, in whole or in part, to constitute the permanent function of the works.

b. Type 1L used in the concrete under sulfate exposure include, but are not limited to, the concrete in contact with soil, marine environment and brackish water. Determine the sulfate resistance requirement in accordance with ACI 318 Table 19.3.2.1 Requirements to Concrete by Exposure Class, and meet the corresponding physical requirements in ASTM C595/C595M using the testing method in ASTM C1012.

c. Type 1L concrete durability must be comparable to Type I/II concrete.

d. Only the Type 1L cement manufactured by the manufacturers on the WSDOT QPL are acceptable to be used in the concrete mix designs.

4. Supplementary Cementitious Materials:

a. Fly-ash: ASTM C618, Class C or F except for Mass Concrete. Fly ash must be Class F is used in Mass Concrete.

b. Ground Granulated Blast-Furnace (GGBF) Slag: ASTM C989/C989M.

c. Silica Fume: ASTM C1240.

C. Coarse Aggregate:

1. Hard, strong, durable gravel or crushed stone conforming to ASTM C33/C33M.

2. Grading:

a. WSDOT Standard Specifications Section 9-03.1(4)C.

3. Use only aggregate that is innocuous with work.

4. Meet the following requirements when tested in conformance with the specified test methods:

a. Resistance to Abrasion (ASTM C131/C131M): For the loss for aggregate size range 3/4-inch to 3/16-inch after 100 revolutions and 500 revolutions do not exceed 10 percent and 35 percent, respectively. Include within the test sample seven parts of Grading B and three parts of Grading C.

b. Resistance to Abrasion (ASTM C535): For the loss for aggregate size range 1-1/2 inches to 3/4 inch (Grading 3) after 200 revolutions and 1,000 revolutions do not exceed 10 percent and 35 percent, respectively.

c. Soundness (ASTM C88/C88M): Weighted average loss after 5 cycles not to exceed 10 percent when tested with sodium sulfate.

d. Bulk Specific Gravity (ASTM C127): On the basis of saturated surface-dry aggregate not less than 2.60.

e. Absorption (ASTM C127): Not to exceed 3 percent.

f. Potential Reactivity (ASTM C289): Only use aggregates that are not harmful for Cement-Aggregate Alkali reactivity.

g. Potential Reactivity (ASTM C227): Only use aggregates that are not harmful for Cement-Aggregate Alkali reactivity.

D. Fine Aggregate:

1. Hard, strong, durable stone or rock fragments conforming to ASTM C33/C33M, except as modified in this specification.

2. Grading:

a. WSDOT Standard Specifications 2020 Section 9-03.1(2)B.

3. Use only aggregate that is innocuous with work.

4. Meet the following requirements when tested in conformance with the specified test methods:

a. Soundness (ASTM C88/C88M): Weighted average loss after 5 cycles not to exceed 10 percent when tested with sodium sulfate.

b. Bulk Specific Gravity (ASTM C128): On the basis of saturated surface-dry aggregate not less than 2.60.

c. Organic Impurities (ASTM C40/C40M): Supernatant liquid lighter in color than the reference standard color solution.

d. Fineness Modulus (ASTM C33/C33M): In the range of 2.80 to 3.50; for the fine aggregate not to vary more than plus or minus 0.20 from the fineness modulus of the fine aggregates used in the concrete mix design.

e. Absorption (ASTM C128): Not to exceed three percent.

f. Potential Reactivity (ASTM C289): Only use aggregates that are not harmful for Cement-Aggregate Alkali reactivity.

g. Potential Reactivity (ASTM C227): Only use aggregates that are not harmful for Cement-Aggregate Alkali reactivity.

E. Admixtures:

1. General:

a. Do not use admixtures containing chlorides, sulfides, or nitrides.

b. Provide admixtures compatible with all other admixtures used in the concrete mix.

2. Air-Entraining: ASTM C260/C260M.

3. Chemical Admixtures:

a. Water-Reducing: ASTM C494/C494M, Type A.

b. High Range, Water Reducing: ASTM C494/C494M, Type F.

c. Plasticizing and Retarding: ASTM C1017/C1017M, Type II.

d. Shrinkage Reducing: ASTM C494, Type S.

e. Retarding: ASTM C494, Type B and D for use in Mass Concrete if required.

4. Shrinkage Reducing Admixtures: mitigate shrinkage with the use of a shrinkage reducing admixture (SRA) in air-entrained concrete for plinth concrete supporting steel tracks:

a. Provide a minimum of two samples of the concrete mix design with the SRA to evidence a maximum shrinkage of 0.02 percent at 28-days when testing per ASTM C157 with the following modifications:

1) Initial measurement must be at 24-hours after casting.

2) Terminate moist curing after a maximum of 7 days after casting.

b. Shrinkage Reducing: ASTM C494, Type S.

c. Manufacturer and products to have demonstrated experience on projects of similar size and complexity for a minimum of 5 years.

5. Water-Based Hydrophobic Admixtures: use in the concrete for top level floors and top-level ramps of parking garages. Also provide at below grade walls and floors forming elevator and escalator pits, below grade shaft walls, or other locations where shown on the Issued for Construction Documents. Product: Hycrete W1000 or approved equal:

a. Meet admixture guidelines for permeability reducing admixtures suitable for hydrostatic (PRAH) and non-hydrostatic (PRAN) service conditions per ACI 212 chapter 15 “Report on Chemical Admixtures”.

b. The concrete mix must not use the admixture that contains Portland cement, sodium silicate, potassium silicate, flyash, silica fume, ground-granulated blast furnace slag, fillers, or other mineral type cementitious constituents.

c. Meet 50 percent or greater in sorptivity compared to control at seven days according to ASTM C1585.

d. Admixture must demonstrate sulfate expansion resistance in concrete with 0.45 water/cement ratio of less than 0.05 percent expansion at 18 months per ASTM C1012.

e. Admixture must demonstrate 50 percent or greater reduction in depth of water penetration under pressure at least 30 days compared to control in concrete per BS EN 12390-8.

f. Mix designs including admixture must be in accordance with admixture manufacturer instructions.

g. Manufacturer and products must demonstrate experience on projects of similar size and complexity for a minimum of 5 years.

h. Manufacturer or vendor must review and approve waterproofing details and procedures, including detailing of joints, waterstops, reinforcing steel, and service penetrations.

i. Manufacturer or vendor must provide pre-placement and placement inspection of waterstop installation, concrete placement, and document specification compliance.

j. Provide waterstops in construction joints as required by Additive Manufacturer. Refer to Section 03 15 13 – Waterstops.

F. Micro synthetic, macro synthetic, and steel fibers: Complying with ASTM C1116/C1116M.

G. Water: ASTM C1602/C1602M.

2.03 MIX DESIGNS

A. Obtain concrete mix designs from a qualified Independent Inspection Laboratory or concrete supplier properly equipped to design concrete mixes.

B. Select mix proportions in conformance with ACI 211.1.

C. Design concrete mixes intended for pumping in conformance with the specifications of ACI 304R and ACI 304.2R.

D. For trial batch, sample and test concrete in conformance with Section 03 30 00 - Cast-In-Place Concrete.

E. Durability: materials and proportions of material for each concrete mix including but not limited to air content, cementitious materials, and chemical content must conform to:

1. Building and Station structures: ACI318 Building Code Requirements for Structural Concrete – Chapters 19 and 20, and Issued for Construction Documents.

2. Elevated Guideway structures: AASHTO LRFD Bridge Design Specifications – Concrete Structures – Durability and Issued for Construction Documents.:

F. Establish proportions of materials for each concrete mix to:

1. Provide workability and consistency to permit concrete to be worked readily into forms and around reinforcement under conditions of placement to be employed, without segregation or bleeding.

2. Meet the strength and applicable exposure requirements as shown on Issued for Construction Documents.

G. Aggregate Size: Nominal size of coarse aggregate must not be larger than the least of:

1. 1/5 the narrowest dimension between the sides of the forms.

2. 1/3 the depth of slabs.

3. 3/4 the minimum clear spacing between individual reinforcing bars, wires, or bundles of bars.

H. Slump: Establish consistency of concrete to facilitate placement with minimized potential for segregation.

I. Shrinkage limit at 28 days measured in accordance with ASTM C157 where required by the Contact Documents or ST Technical Design Requirements.

2.04 SOURCE QUALITY CONTROL

A. Sample Tests and Analyses: Test cement, coarse aggregate and fine aggregate to demonstrate conformance with the following requirements:

1. Portland Cement: ASTM C114.

2. Portland Limestone Cement: ASTM C1012.

3. Aggregates:

a. Grading and quality: See Article 2.02 Materials of this section.

b. Sieve analysis: ASTM C136/C136M.

PART 3 - EXECUTION

3.01 PREPARATION

A. Measure, batch, and mix Portland cement concrete in conformance with ASTM C94/C94M:

1. Use central-mixed concrete transported to the jobsite in truck mixers.

2. Use truck mixers equipped with:

a. Automatic device for recording the number of drum revolutions prior to complete of mixing operations.

b. Either accurately calibrated water tanks or water meters.

3.02 DELIVERY

A. Delivery and conveying of concrete conformance with ACI 301 and ACI 304R.

B. Transport and deliver concrete in conformance with ASTM C94/C94M and furnish batch ticket information:

1. Batch tickets: include the amount of water in the batch from the plant and the remaining water that is to be added at the site, if any.

C. Mix concrete continuously in truck mixer until discharged.

D. Mix ready-mixed concrete for a period of not less than 10 minutes. Mix for at least 3 minutes immediately prior to discharging at the site.

E. Do not place concrete more than 90 minutes or 300 drum revolutions after introduction of the mixing water, whichever is less.

3.03 ADJUSTING

A. If concrete arrives at the site with a slump less than is workable for the given mix design, adjust the slump by adding water at the site with the following restrictions:

1. Water added at the site was withheld from the batch water at the plant.

2. The total water added at the plant and the site does not exceed the mix design water amount.

3. Water is added at the site in conformance with ASTM C94.

4. Do not add water to the concrete after water reducing admixtures are added at the site.

5. Do not add water to the concrete after partial discharge of the load.

B. Retest slump, temperature, and air content after slump adjustment in conformance with Section 03 30 00 - Cast-In-Place Concrete.

C. If concrete arrives at the site with a slump greater than acceptable, perform a check test immediately on a new test sample. In the event the check test fails, the Resident Engineer will consider the concrete to have failed the requirements and rejected it.

3.04 WEATHER RELATED PLACEMENT

A. Refer to Section 03 30 00 - Cast-In-Place Concrete

END OF SECTION

SECTION 03 11 00

CONCRETE FORMING

PART 1 - GENERAL

1.01 SUMMARY

A. Section includes:

1. Requirements for the design, construction, and treatment of formwork for cast-in- place concrete construction.

1.02 REFERENCES

A. This Section incorporates by reference the latest revisions of the following documents:

1. American Concrete Institute (ACI):

a. ACI 116R Cement and Concrete Terminology.

b. ACI 117 Specification for Tolerances for Concrete Construction and Materials and Commentary.

c. ACI 301 Specifications for Structural Concrete.

d. ACI 347R Guide to Formwork for Concrete.

2. APA-The Engineered Wood Association (APA):

a. APA PS 1 Standard for Structural Plywood.

b. APA Concrete Forming Design/Construction Guide.

3. American Society for Testing and Materials (ASTM) International:

a. ASTM D994/D994M Standard Specification for Preformed Expansion Joint Filler for Concrete (Bituminous Type).

b. ASTM D1751 Standard Specification for Preformed Expansion Joint Filler for Concrete Paving and Structural Construction (Nonextruding and Resilient Bituminous Types).

c. ASTM D4397 Standard Specification for Polyethylene Sheeting for Construction, Industrial, and Agricultural Applications.

4. Federal Specifications (FED):

a. FED TT-S-1543B Sealing Compound, Silicone Rubber Base (For Caulking, Sealing, and Glazing in Buildings and Other Structures).

5. Pacific Lumber Inspection Bureau (PLIB)

a. WCLB Standard Grading Rules for West Coast & Imported Softwood Lumber.

6. Washington State Department of Transportation (WSDOT):

a. WSDOT Standard Specifications for Road, Bridge and Municipal Construction (WSDOT Standard Specification).

B. Definitions:

1. Roughened: Concrete intentionally roughened to a full amplitude of approximately 1/4 inch.

2. With the above exception, the words and terms used in this Section conform to the definitions given in ACI 116R.

1.03 SUBMITTALS

A. Submit

1. Shop Drawings:

a. Overall geometry of formwork, shoring, reshoring, and backshoring.

b. Locations and details of:

1) Expansion joints and construction joints.

2) Maximum lift height, maximum pour length, maximum pour rate.

3) Formed concrete items such as keys, blockouts, and openings.

4) Embedded items such as metal fabrications, waterstops, and conduit.

5) Form ties (if used). Layout of form ties to reinforce the architectural design. Use Hole Plugs per specification.

6) Control Joints to control and direct shrinkage cracking. Submit joint plan for approval prior to pouring slabs and walls.

7) Corner chamfers.

2. Procedures for:

a. Erecting formwork and shoring.

b. Monitoring formwork movement during concrete placement.

c. Determining strength of concrete for removal of formwork if other than field-cured cylinders.

d. Removing formwork, reshoring, and backshoring.

3. Calculations, sealed by a Professional Engineer licensed in the State of Washington. Include complete calculations with working drawings describing the formwork, shoring, geometry, details, and procedures.

4. Formwork Construction Work Plan. Construction Work Plan must include complete details, drawings, a step-by-step procedure, and must provide the anticipated time for each construction activity.

5. Construction work plan for work over traffic:

a. Construction Work Plan for work over traffic must include the proposed work schedule, durations, night activities, activities over traffic, precautions for work performed over traffic, and any sidewalk, lane, shoulder, or roadway closures needed to perform the work. The Work Plan must also include the drainage plan.

b. Complete details of the catchment structure for protection of traffic. The catchment structure details must include horizontal and vertical clearances to sidewalks or roadways open to traffic during construction of each cast-in-place element.

B. Transmit

1. Samples:

a. Formwork facing materials: One sample for each type used, minimum of 12 inches by 12 inches or large enough to demonstrate conformance with the required formed pattern.

2. Manufactured Products:

a. For formliners:

1) Manufacturer's Product Data to demonstrate conformance.

2) Manufacturer's written instructions for storage, handling, and installation.

3. Qualifications for Professional Engineer.

1.04 QUALITY ASSURANCE

A. Professional Engineer: Select a licensed professional engineer currently registered in the State of Washington with minimum 5-year experience in this type of design.

B. Provide the submitted/approved formwork calculations sealed by the transmitted Qualified Professional Engineer.

1.05 DELIVERY, STORAGE AND HANDLING

A. Store and handle form facing materials to prevent distortion, damage, and contamination that could adversely affect the concrete finish.

B. Store and handle manufactured products in conformance with manufacturer's written instructions.

1.06 PROJECT CONDITIONS

A. Allow sufficient time between erection of forms and placing of concrete for the various trades to properly install concrete reinforcement, embedded items, sleeves, and blockouts.

B. Do not apply lateral or vertical superimposed loads to structure until concrete has developed specified compressive strength.

PART 2 - PRODUCTS

2.01 DESIGN REQUIREMENTS

A. Design and installation of formwork must conform to ACI 301.

B. Design and installation of falsework and formwork on WSDOT facilities must conform to WSDOT Standard Specifications Section 6-02.3(17) Falsework and Formwork.

C. Loads due to operations on WSDOT facilities or loads influencing WSDOT foundations must conform to WSDOT Standard Specifications Section 1.07.7 Load Limits.

D. Design plywood for formwork in accordance with the APA Design/Construction Guide: Concrete Forming.

E. Design formwork, shores, reshores, and backshores in conformance with ACI 347R.

F. Design formwork and shores to resist pressure resulting from concrete placement and maintain tolerances during placement and vibration of concrete.

G. Design formwork to be removed without damage to adjacent concrete surfaces or materials.

H. For post-tensioned structures, design the formwork to carry the additional loads caused by the post-tensioning operations.

I. Do not use earth cuts as forms for vertical or sloping surfaces unless indicated on the Issued for Construction Documents.

J. Tolerances: Design and construct formwork to produce finished concrete surfaces within the following tolerances:

1. Deflection of Facing Material from dead load and concrete fluid pressure:

   a. Unexposed non-visible surfaces, including the bottom of deck slab between girders: L/270.

   b. Exposed visible surfaces: L/360.

2. Vertical Alignment:

   a. Lines, surfaces, and arises: 1 inch.

   b. Outside corner of exposed corner columns and control joint grooves in concrete exposed to view: 1/2 inch.

3. Vertical Alignment at Track Plinth Locations

   a. Elevations of slabs in tunnels and slabs on grade: +1/2 inch to -1 inch.

   b. Elevation of bridge deck surfaces: +1/2 inch to -1 – 1/2 inch.

4. Lateral Alignment:

   a. Members: 1 inch.

   b. In slabs, centerline location of openings 12 inches or smaller and edge locations of larger openings: 1/2 inch.

   c. Sawcuts, joints, and weakened plane embedments in slabs: 3/4 inch.

5. Level Alignment:

   a. Tops of slabs:

      1) Elevation of slabs on grade: 3/4 inch.

      2) Elevation of top surfaces of formed slabs before removal of supporting shores: 3/4 inch.

      3) Slabs that receive thin-set tile, or resilient flooring must have a flatness rating of 35 and levelness rating of 25 per ACI 117.

      4) Slabs that receive carpet must have a flatness rating of 25 and levelness rating of 20 per ACI 117.

b. Elevation of formed surfaces before removal of shores: 3/4 inch.

c. Lintels, sills, parapets, horizontal grooves, and other lines exposed to view: 1/4 inch.

6. Cross-sectional Dimensions:

a. Members, such as columns, beams, piers, walls (thickness only), and slabs (thickness only).

1) Dimension 12 inch or less: plus 3/8-inch, minus 1/4 inch.

2) Dimension more than 12 inch but less than 3 feet: plus 1/2-inch, minus 3/8 inch.

3) Dimension over 3 feet: plus 1-inch, minus 3/4 inch.

7. Relative Alignment:

a. Stairs:

1) Difference in height between adjacent risers: plus, or minus 1/8 inch.

2) Difference in width between adjacent treads: plus, or minus 1/4 inch.

b. Grooves:

1) Specified width 2 inches or less: plus, or minus 1/8 inch.

2) Specified with more than 2 inches but less than 12 inches: plus, or minus 1/4 inch.

c. Formed surfaces slope with respect to the specified plane must not exceed the rate of 3/8 inch per 10 feet.

8. The offset between formed surface irregularities must not exceed:

a. Surfaces exposed to public view: ACI 117 Class A surface, 1/8 inch.

b. Other surfaces: ACI 117 Class C surface, 1/2 inch.

c. See Section 03 35 00 - Concrete Finishing for additional requirements.

9. In locations where more than one tolerance applies, use the stringent tolerance.

2.02 FORM FACING MATERIALS

A. Rough Form Finish

1. Boards: Use dressed side of lumber for surface in contact with the concrete and use dressed or tongue-and-groove edges.

2. Framing Lumber: Structural grade, dressed or rough. Warped or wet lumber is not permitted.

B. Smooth Form Finish:

1. Types:

a. B-B Plyform: Class I, EXT-APA, sanded, APA trademarked and conforming to APA PS 1.

b. B-C Plyform: Class I, EXT-APA, APA trademarked and conforming to APA PS 1.

c. High Density Overlay (HDO) Plyform: A-A, 60-60, Class I, EXT-APA, APA trademarked and conforming to APA PS 1.

2. Thickness: As required to maintain surface smoothness without deflection, but not thinner than 5/8 inch.

3. Finish Tolerance: ACI 117, and paragraph 2.01.J.7.

2.03 PRODUCTS

A. Steel Forms:

1. Proprietary, patented, or fabricated steel forms, using standard commercial quality, uncoated steel sheet or plate, 3/16-inch minimum thickness, for panel facings. Include panel framing, reinforcement, and erection accessories.

B. Round Column Forms:

1. Pressed or molded fiber-reinforced plastic, manufactured round column forms, seamless or one-piece (one vertical seam), smooth surface, of sizes indicated.

2. See Section 03 33 00 - Concrete Finishing

C. Formwork Accessories

1. Form Ties: Rod type with end fasteners which can be removed without spalling the concrete. Provide cones with setbacks equal to the required concrete cover. Form ties are not allowed for single-sided formed walls requiring waterproofing.

2. Form Tie Hole Plugs: Preformed mortar plugs to match the color of the concrete, recessed 1/4 inch. Adhere with a manufacturer approved epoxy adhesive.

3. Chamfer Strips: Fillet milled from clear, straight-grain pine, surfaced each side; or extruded vinyl type with or without nailing flange.

4. Polyethylene Sheeting: Single ply 6-mil polyethylene sheeting conforming to ASTM D4397. Provide a compatible tape with equal or better water vapor control characteristics than sheeting.

D. Form Release Agent:

1. Commercial formulation, silicone-free, designed for use on all form facing materials used, which will not:

a. Bond with, stain, or adversely affect concrete surfaces.

b. Impair subsequent treatment of concrete surfaces requiring bond or adhesion.

c. Impede wetting of surfaces which will be cured with water, steam, or curing compounds.

E. Joint and Seam Sealer: Capable of producing flush, watertight, and nonabsorbent surfaces and joints, and compatible with forming material and concrete ingredients:

1. Sealant Compound: Silicone sealant conforming to Federal Specification TT-S-001543A (CON-NBS).

2. Form Film Tape: Polypropylene plastic treated with waterproof adhesive for joint conditions not exposed to public view.

F. Premolded Joint Filler: ASTM D994/D994M or ASTM D1751.

G. Limit the products to what are listed above. Do not use metal lath forms (stayforms).

2.04 ACCESSORIES

A. Provide openings, offsets, sinkages, keyways, recesses, molding, rustications strips, chamfers, blocking, screed bulkheads, anchorages, embedded items, and other features.

PART 3 - EXECUTION

3.01 PREPARATION

A. Locate and stake out all forms, inserts, conduits, blockouts, and obstructions. Establish all lines, levels, and elevations. Include all checks into the pre-pour checklist.

3.02 CONSTRUCTION

A. General:

1. Construct formwork in conformance with the approved Shop Drawings to produce finished concrete surfaces as indicated and within specified tolerances.

2. Anchor formwork to shores, supporting surfaces, or members to prevent upward or lateral movement of the formwork system during concrete placement.

3. Provide runways for moving equipment. Support runways directly on formwork or structure, without resting on reinforcing steel.

4. Provide positive means of adjustment of formwork. Adjust and secure before concrete placement. Do not adjust formwork after concrete has achieved initial set.

B. Work Over Traffic:

1. Seal forms to prevent leaks.

2. Extend catchment beyond work zone to be made of rigid material.

C. Form Facing Materials:

1. Provide smooth form finish materials for surfaces exposed to public view.

2. Provide rough form finish materials for surfaces not exposed to public view.

D. Form Panels:

1. Maintain form panels clean, smooth, and free from imperfections and distortion.

2. Arrange form panels in symmetrical patterns conforming to general lines of the structure. Unless otherwise indicated, orient panels on vertical surfaces with long dimension horizontal and make horizontal joints level and continuous. Use largest stock size practicable.

3. Make panel joints and seams mortar tight. Install joint and seam sealers in accordance with the manufacturer's written instructions.

4. Align form panels on each side of a panel joint with fasteners common to both panels to provide a continuous concrete plane surface.

E. Construction Joints:

1. At construction joints exposed to view, lap contact surface of form sheathing for flush surfaces over the hardened concrete in the previous placement by not more than 1 inch.

2. Ensure formwork is held firmly against hardened concrete to prevent offsets or loss of mortar at construction joints and to maintain a true surface.

F. Edge Forms and Bulkheads:

1. Set edge forms, bulkheads, and intermediate screeds for slabs to obtain required elevations and contours in the finished slab surface. Ensure that edge forms and screed strips are sufficient to support the screeds to be used.

2. When formwork is cambered, set screeds to like camber to maintain required concrete thickness.

3. Brace bulkheads to prevent warpage or displacement. Set tightly against forms to prevent loss of concrete mortar.

4. Seal edge forms with joint and seam sealers such that neither a fin nor groove is made in the face of the cast concrete.

G. Corners: Provide 3/4-inch chamfer on all outside corners unless noted otherwise. Miter chamfer at intersections. Reentrant corners need not have fillets.

H. Embedded Items: Provide embedded items in conformance with the approved Shop Drawings. Secure to reinforcement or formwork to prevent movement during concrete placement. Fill voids with readily removable material to prevent entry of concrete.

I. Blockouts and Openings:

1. Securely wrap concrete blockouts with sheeting forming a smooth, tight-fitting surface. Overlap sheeting material at seams a minimum of six inches and tape both sides of sheeting.

2. Provide temporary openings at the base of column and wall formwork and other locations where necessary to facilitate cleaning and inspection. Clean and inspect immediately before concrete is placed.

3. Provide air escape holes in bottom members of blockouts in vertical forms.

J. Form Release Agent:

1. Apply form release agent in conformance with manufacturer's written instructions.

2. Coat form contact surfaces with form release agent before reinforcement is placed.

3. Do not allow excess form release agent material to accumulate in the forms.

4. Do not allow excess form release agent to come into contact with surfaces to be bonded to fresh concrete such as concrete reinforcement, embedded items, and hardened concrete.

5. Coat steel forms with non-staining, rust-preventive form release agent, or otherwise protect against rusting. Do not use rust-stained steel surfaces for forms in contact with concrete.

6. Apply release agent to bolts and rods that are to be removed or that are to be free to move.

3.03 REMOVAL OF FORMWORK

A. Maintain formwork supporting concrete weight in place until the concrete has attained the minimum percentage of specified design compressive strength and minimum number of days specified in Table 03 11 00-A, whichever comes later.

TABLE 03 11 00-A – Minimum Requirements for Formwork Removal		
Structural Member or Condition	**Minimum Compressive Strength (Percent of Minimum Design Compressive Strength)**	**Minimum Time**
Sides of forms not supporting the concrete weight, including columns, walls, crossbeams, non-sloping box girder webs, and abutments.	30	3 days
Side forms of footings, pile caps, and shaft caps.	30	18 hours
Crossbeams, sloping box-girder webs, struts, inclined columns, inclined walls, and other forms that support the concrete weight	80	5 days
Elevated slabs or beams over 20 feet span between supports	90	14 days
Elevated slabs or beams 10 feet to 20 feet span.	80	10 days
Elevated slabs or beams under 10 feet span	70	4 days
Post-tensioned systems	As soon as post-tensioning operations have been completed and approved	
Arches	90	14 days

B. Remove forms without injuring concrete surfaces, overstressing concrete members, or distorting formwork. Do not pry against concrete.

C. Remove forms only if shores have been arranged to permit removal of forms without loosening or disturbing shores.

D. Post-Tensioned Construction: Stressing of the post-tensioned system to be approved by the Resident Engineer. Do not strip formwork supporting cantilever slabs or edge beams until backshores and/or reshores have been placed.

E. Cut nails off flush. Leave surfaces clean and unblemished.

3.04 SHORING, RESHORING, AND BACKSHORING

A. Provide shoring in conformance with the approved Shop Drawings.

B. In multistory construction, extend shoring, backshoring or reshoring over a sufficient number of stories to distribute loads in such a manner that no floor or member will be excessively loaded or will induce tensile stress in concrete members without sufficient steel reinforcement.

C. Keep reshores or backshores in place after placing upper tier for a minimum of 15 days or longer, as required, until concrete has attained its required 28-day strength and heavy loads

due to construction operations have been removed. Reshore if needed for construction loads on elevated floors and/or construction means and methods loads on floors.

D. Plan sequence of removal of shores and installation of backshores and reshores to avoid damage to concrete. Locate and provide adequate backshoring and reshoring to support construction without excessive stress or deflection.

E. Prevent construction loads on new construction during reshoring/backshoring.

3.05 CLEANING

A. Clean and repair surfaces of forms to be reused.

B. Apply form release agent as specified for new formwork.

C. Patch superficial or minor holes and defects in forms with materials and methods that will not be reflected in the concrete.

D. Do not reuse forms with raised grain, torn surfaces, worn edges, patches, dents, or other defects that will impair the texture of the concrete surface.

3.06 FIELD QUALITY CONTROL

A. Before placing concrete, verify the following:

1. Lines and levels of erected formwork are correct.

2. Formed and embedded items are located correctly and secured against movement.

3. Embedded piping and conduit are free from obstructions.

4. Loose tie-wire and other debris have been removed from the forms.

5. Surfaces of formwork and embedded items are free of mortar, grout, and other foreign matter.

6. Chamfer and Blockouts are located correctly and secured against movement.

7. Form release agent is applied.

B. While placing concrete, verify the following:

1. Formwork geometry is maintained within specified tolerances.

2. Cement paste is not lost through joints.

3. Maximum lift height, maximum pour length, and maximum pour rate is monitored, managed, and achieved (as required per submitted Shop Drawings).

C. Monitor movement during concrete placement. Adjust formwork as necessary to maintain tolerances.

END OF SECTION

SECTION 03 15 00

CONCRETE ACCESSORIES

PART 1 - GENERAL

1.01 SUMMARY

A. Section includes:

1. Requirements for furnishing and installing joint fillers and sealing compounds for joints in concrete.

1.02 REFERENCES

A. This Section incorporates by reference the latest revisions of the following documents:

1. American Concrete Institute (ACI)

a. ACI 504R Guide to Joint Sealants for Concrete Structures.

2. American Society for Testing and Materials (ASTM) International:

a. ASTM D994/D994M Standard Specification for Preformed Expansion Joint Filler for Concrete (Bituminous Type).

b. ASTM D1751 Standard Specification for Preformed Expansion Joint Filler for Concrete Paving and Structural Construction (Nonextruding and Resilient Bituminous Types).

c. ASTM D2628 Standard Specification for Preformed Polychloroprene Elastomeric Joint Seals for Concrete Pavements.

d. ASTM D6690 Standard Specification for Joint and Crack Sealants, Hot Applied, for Concrete and Asphalt Pavements.

e. ASTM D7174 Standard Specification for Preformed Closed-Cell Polyolefin Expansion Joint Fillers for Concrete Paving and Structural Construction.

1.03 SUBMITTALS

A. Submit

1. Shop Drawings: Include single-line diagram showing location and dimension of all joints to be filled and sealed.

B. Transmit

1. Product data, safety data, and installation instruction from product manufacturer.

2. Samples: 12-inch long sample of joint filler and 1 pint or quart can of sealing compound to be submitted.

PART 2 - PRODUCTS

2.01 MATERIALS

A. Premolded Joint Filler must conform to ASTM D994/D994M or ASTM D1751. For structural joints and joints subject to expansion, provide joint filler conforming to ASTM D7174.

B. Joint Seal: Conform to ASTM D2628, for sealing of joints in slabs and at junctions of slabs and vertical surfaces. Use color selected by the Resident Engineer from the manufacturer's standards.

C. Hot Poured Joint Sealant must meet the requirements of ASTM D6690.

PART 3 - EXECUTION

3.01 EXAMINATION

A. Verify that concrete conditions comply with the requirements of the manufacturer’s written directions before installation.

B. Verify that weather conditions comply with the requirements of the manufacturer’s written directions before installation.

3.02 PREPARATION

A. Prepare the surface in conformance with manufacturer’s written instructions.

3.03 INSTALLATION

A. General: Install and protect joint sealant in conformance with manufacturer’s written instructions.

END OF SECTION

SECTION 03 15 13

WATERSTOPS

PART 1 - GENERAL

1.01 SUMMARY

A. Section includes:

1. Requirements for furnishing and installing waterstops in concrete and spanning control, expansion, and construction joints to prevent fluid migration.

1.02 REFERENCES

A. This Section incorporates by reference the latest revisions of following documents:

1. United States Army Corps of Engineers (COE):

a. COE CRD-C-513 Corps of Engineers Specifications for Rubber Waterstops.

b. COE CRD-C-572 Corps of Engineers Specifications for Polyvinylchloride Waterstops.

1.03 SUBMITTALS

A. Submit

1. Shop Drawings: Single-line diagram showing locations of all joints to receive waterstops, indicate type and size.

a. Include locations for shop fabricated and field fabricated splices to be used in the Work.

2. Detail Drawings:

a. Show location of waterstops.

b. Show details of supports.

B. Transmit

1. Product Data:

a. Manufacturers' product data.

b. Manufacturer’s written instructions for storage, handling, and installation.

c. Material Safety Data Sheets.

2. Samples:

a. 12-inch long sample of each waterstop.

1.04 DELIVERY, STORAGE, AND HANDLING

A. Deliver, store, and handle waterstops in conformance with manufacturers' written instructions.

B. Store waterstops to protect from oil, dirt, sunlight, and premature exposure to water.

PART 2 - PRODUCTS

2.01 PRODUCTS

A. PVC waterstops for construction and expansion joints meeting the requirements of COE CRD-C-572:

1. The PVC waterstop is extruded from an elastomeric plastic material of which the basic resin is prime virgin polyvinyl chloride.

2. The PVC compound does not contain any scrapped or reclaimed material or pigment.

B. Expansive waterstop comprised of hydrophilic, modified rubber meeting the requirements of COE CRD-C-513:

1. The waterstop is a combination of chloroprene rubber and chloroprene rubber modified to impart hydrophilic properties.

2. The waterstop must have a delay coating to inhibit initial expansion due to moisture present in fresh concrete.

C. Self-Expanding Butyl Strip Waterstops for use on hycrete concrete only: Manufacturered rectangular or trapezoidal strip, butyl rubber with sodium bentonite or other hydrophilic polymers, for adhesive bonding to concrete. Limit locations to use for Hycrete concrete only. Limit below grade use to Hycrete concrete locations where complete waterproofing membranes are provided on the exterior of the concrete. Install per manufacturer's written instructions. Acceptable products include the following or approved equal:

1. Cetco Waterstop Rx.

2. Sika Swellstop.

D. Self-Expanding Rubber Strip Waterstops: manufactured rectangular or trapezoidal strip, bentonite-free hydrophilic polymer modified choloprene rubber, for adhesive bonding to concrete:

1. Sika Hydrotite CJ.

PART 3 - EXECUTION

3.01 INSTALLATION

A. Provide waterstops types and extents in locations as indicated on Issued for Construction Drawings.

B. Install waterstops in conformance with the manufacturer's written instructions:

1. Install waterstops accurately in place and secure rigidly against movement by methods adequate to assure proper support and embedment during the placement of concrete.

2. Install waterstops in the longest practicable length, with joints spliced to form a continuous watertight seal for the full length of the joint.

3. Place and consolidate concrete to ensure a complete filling and bond between the concrete and waterstop. Use cement-sand grout slurry optionallywhere necessary to assure contact and bond of waterstop and concrete without voids.

4. PVC waterstops:

    a. Heat fuse weld field butt splices by using a Teflon covered thermostatically controlled waterstop splicing iron at approximately 380 degrees Fahrenheit. Follow manufacturer’s instructions.

    b. Lapping of waterstop and use of adhesives, or solvents are prohibited.

    c. Center waterstop in joint and secure waterstop in correct position using grommets, pre-punched holes, or hog rings spaced at 12 inches on centers along the length of the waterstop and wire tie to adjacent reinforcing steel.

5. Expansive waterstops:

    a. Cut coil ends square (or at proper angle for mitered corners) with shears or sharp blade to fit splices together without overlaps.

    b. Seal splices and exposed end cells using manufacturer’s approved adhesive.

6. Self-Expanding Butyl Strip Waterstops:

    a. Cut coil ends square (or at proper angle for mitered corners) with shears or sharp blade to butt joints together without overlaps.

    b. Locate waterstops in center of joint unless otherwise indicated on Drawings. Position and secure using manufacturer's specified adhesive, mechanical fasteners, or other methods to ensure there is sufficient concrete coverage on all sides and waterstop remains in place during concrete placement.

    c. Protect installed waterstop from premature expansion prior to concrete placement. Replace waterstop material that exhibits significant expansion prior to concrete encapsulation.

3.02 FIELD QUALITY CONTROL

A. Waterstop installation is subject to inspection and acceptance by the Resident Engineer. Allow access for inspections.

END OF SECTION

SECTION 03 15 18

ELEVATED GUIDEWAY EXPANSION JOINTS

PART 1 - GENERAL

1.01 SUMMARY

A. Section includes:

1. Requirements for furnishing and installing elevated guideway expansion joints at the locations shown on the Issued for Construction Drawings.

1.02 REFERENCES

A. This Section incorporates by reference the latest revisions of the following documents:

1. American Society for Testing and Materials International (ASTM):

a. ASTM A588/A588M Standard Specification for High-Strength Low-Alloy Structural Steel, up to 50 ksi Minimum Yield Point, with Atmospheric Corrosion Resistance.

b. ASTM D395 Standard Test Methods for Rubber Property – Compression Set.

c. ASTM D412 Standard Test Methods for Vulcanized Rubber and Thermoplastic Elastomers – Tension.

d. ASTM D471 Standard Test Method for Rubber Property – Effect of Liquids.

e. ASTM D573 Standard Test Method for Rubber – Deterioration in an Air Oven.

f. ASTM D624 Standard Test Method for Tear Strength of Conventional Vulcanized Rubber and Thermoplastic Elastomers.

g. ASTM D1149 Standard Test Methods for Rubber Deterioration – Cracking in an Ozone Controlled Environment.

h. ASTM D2240 Standard Test Method for Rubber Property – Durometer Hardness.

i. ASTM D3542 Standard Specification for Preformed Polychloroprene Elastomeric Joint Seals for Bridges.

2. American Association of Highway Transportation Officials / American Welding Society (AASHTO/AWS):

a. AASHTO/AWS D1.5 Bridge Welding Code.

1.03 SUBMITTALS

A. Submit:

1. Shop drawings:

a. Submit drawings in accordance with WSDOT Standard Specifications 6-02.3(13) Expansion Joints for the strip seal expansion joint system and compression seal expansion joint system.

b. Shop drawings explicitly set forth the proposed means by which the strip seal expansion joint is aligned and set to grade.

2. Welding Procedures:

B. Transmit:

1. Product Data:

a. Certificates of Compliance for the expansion joints confirming that the materials, fabrication, testing, and installation of the expansion joints are in conformance with these Specifications.

2. Expansion joint system's plan, elevation, section, location (bent number), nominal joint size or model number, and all dimensions for each expansion joint provided.

3. Manufacturers' Qualifications.

4. Manufacturer's written installation procedure

1.04 QUALITY ASSURANCE

A. The manufacturer of the elevated guideway expansion joints must be a firm specializing in the design and fabrication of expansion joints for bridge or similar structures.

B. The manufacturer must have a minimum of 5 years of experience specializing in expansion joints systems for similar applications.

C. Provide a technical qualified representative from the manufacturer of the expansion joints to train the installer on the proper techniques for installing the seal. Hire the manufacturer to register and approve each installation .

PART 2 - PRODUCTS

2.01 PRODUCTS

A. Employ one manufacturer to provide the expansion joints which is one of the following or approved equal:

1. Preformed, precompressed, self-expanding foam joint with silicone coating, epoxy bonded to sides of concrete surfaces, manufactured by EMSEAL for BEJS joint system (EMSEAL BEJS), or approved equal.

2. Preformed neoprene seal epoxy bonded to sides of concrete surfaces (neoprene seal). The manufacturer and system must be one of the following or approved equal:

a. D.S. Brown JP Series.

b. Watson Bowman Jeene FW Series Structural Sealing System.

3. Strip seal expansion joints are preformed neoprene seals with embedded steel retainer rails and must be from the same manufacturer and must be one of the following or approved equal:

a. D.S. Brown Steelflex Strip Seal Expansion Joint Systems.

b. Watson Bowman Acme Wabo Strip Seal.

B. BEJS Joint System by EMSEAL:

1. Provide materials meeting all requirements of EMSEAL for BEJS system or approved equal.

2.02 MATERIALS

A. Expansion joints materials are new and unused, with no reclaimed material incorporated in the finished expansion joints.

B. Neoprene:

1. Preform and manufacture the seal is from vulcanized elastomeric compound using polymerized chloroprene (neoprene) as the only base polymer.

2. Prefabricate the seal in the shop to fit the final dimensions of the joint as it occurs on the guideway. No field splices are allowed.

3. Use an extruded neoprene compound for the seal material conforming to the physical properties shown in the table below, in accordance with ASTM D3542**.**

Physical Properties of Neoprene Elastomeric Joint Seals		
Property	**Requirements**	**Test Method**
Tensile Strength • Before aging: • After oven aging 70 hours @ 212 degrees F, loss in percent.	2000 PSI, min. 20 percent loss, max.	ASTM D412 ASTM D573
Elongation at Break • Before aging: • After oven aging 70 hours @ 212 degrees F	250 percent, min. 20 percent loss, max.	ASTM D412 ASTM D573
Hardness, Type A Durometer • Before aging: • After oven aging: 70 hours @ 212 degrees F • After 7 days @ +14 degrees F	65±5 points 0 to +10 points 0 to +15 points	ASTM D2240 ASTM D573 ASTM D2240
Ozone Resistance, under 20 percent strain:	No cracks	ASTM D1149
Weight change in oil after 70 hours at 104 degrees F in ASTM Oil No. 3, weight change:	45 percent, max.	ASTM D471
Compression Set, 70 hours @ 212 degrees F	40 percent max.	ASTM D395

C. Epoxy adhesive: 2-part epoxy adhesive meeting the seal manufacture's written requirements.

D. Steel retainer rails must be in accordance with ASTM A588/A588M. Retainer rails must be one piece construction. Galvanize all embedded metal items according to shop applied coatings for metal requirements as stated in the Issued for Construction Documents. Additionally, coat all embedded metal items' exposed surfaces with high performance coating, HPC-3, color Washington Gray as stated in the Issued for Construction Documents.

2.03 FABRICATION

A. Shop fabricate the entirety of the seals.

B. The seal must be preformed and manufactured from vulcanized elastomeric compound using polymerized chloroprene (neoprene) as the only base polymer.

C. The size, shape, and dimensional tolerances of the seals must be as shown on the Issued for Construction Drawings.

D. Construct the joint sides straight and parallel to each other to the proper width and depth indicated on the Issued for Construction Drawings to prevent any wedging from expansion and contraction.

E. The seal must be one continuous piece for the full length. Splices, stretched, and glued joints are prohibited.

F. Clearly mark shipping containers with the name of the manufacturer, lot number, and the date of manufacture.

G. Welding must be in accordance with AASHTO/AWS D1.5.

PART 3 - EXECUTION

3.01 INSTALLATION

A. Install the expansion joint assemblies in accordance with the information shown in the Issued for Construction Drawings, the Shop Drawings and the manufacturer's instructions.

B. Place a polyurethane backer rod in the seal cavity of the strip seal steel retainer rails by the Contractor prior to pouring concrete and to stay in place until concrete poured.

C. Installed expansion joints to be watertight. After the joint system is installed, flood the joint with water and inspect, from below the joint, for leakage.

D. Installed expansion joints to be free of damage.

END OF SECTION

SECTION 03 15 25

ANCHORAGE TO CONCRETE

PART 1 - GENERAL

1.01 SUMMARY

A. Section includes:

1. Requirements for anchoring systems to attach structural steel and metal fabrications or equipment to concrete or concrete masonry. Specifications are included for reinforcement dowels to attach concrete to concrete or concrete masonry.

2. Provisions for vibratory anchorage design for mechanical equipment are given in Sound Transit Standard Specifications Division 22 – Plumbing and Division 23 – Heating, Ventilation, and Air Conditioning.

1.02 REFERENCES

A. This Section incorporates by reference the latest revisions of the documents:

1. American Concrete Institute (ACI).

a. ACI 318 Building Code Requirements for Structural Concrete.

b. ACI 355.2 Qualification of Post-Installed Mechanical Anchors in Concrete.

2. American National Standards Institute (ANSI):

a. B212.15 Cutting Tools - Carbide-Tipped Masonry Drills and Blanks for Carbide-Tipped Masonry Drills.

3. American Society for Testing and Materials International (ASTM):

a. ASTM A108 Standard Specification for Steel Bar, Carbon and Alloy, Cold-Finished.

b. ASTM A1064 Standard Specification for Carbon-Steel Wire and Welded Wire Reinforcement, Plain and Deformed, for Concrete.

c. ASTM A563 Standard Specification for Carbon and Alloy Steel Nuts.

d. ASTM A615 Standard Specification for Deformed and Plain Carbon-Steel Bars for Concrete Reinforcement.

e. ASTM A706 Standard Specification for Deformed and Plain Low-Alloy Steel Bars for Concrete Reinforcement.

f. ASTM F1554 Standard Specification for Anchor Bolts, Steel, 36, 55, and 105-ksi Yield Strength.

g. ASTM F2329 Standard Specification for Zinc Coating, Hot-Dip, Requirements for Application to Carbon and Alloy Steel Bolts, Screws, Washers, Nuts, and Special Threaded Fasteners.

h. ASTM F436 Standard Specification for Hardened Steel Washers.

4. American National Standards Institute/American Welding Society (ANSI/AWS):

a. ANSI/AWS D1.1 Structural Welding Code – Steel.

b. ANSI/AWS D1.4 Structural Welding Code – Reinforcing Steel.

c. AAASHTO/AWS D1.5 Bridge Welding Code.

5. International Code Council – Evaluation Service (ICC-ES):

a. ICC-ES AC 193 Mechanical Anchors in Concrete Elements.

b. ICC-ES AC 308 Post-Installed Adhesive Anchors in Concrete Elements.

1.03 SUBMITTALS

A. Submit:

1. For deferred design that is performed by the subcontractor, in advance of anchor installation, submit to the Resident Engineer the calculation set of anchorage design sealed by a Professional Engineer licensed in the State of Washington for approval.

2. Embedment shop drawings that include the embed plate fabrication shop drawing and the plans/ elevations showing the exact location of the embed in wall, column, slab, beam or other concrete element. Dimension this position from the gridlines and floor levels or other major geometry key. The Coordinate the embed position drawing with the related formwork, rebar and mechanical/ electrical/ plumbing embeds shop drawings before submitting for review. The review and approval of anchor shop drawings, erection drawings and anchor design calculations must consider all anchor attachments by other trades.

3. Photos of desired post-installed concrete anchors with locations of reinforcement identified by scanning.

4. Failed Anchor or Dowel Documentation: Documentation for anchors or dowels for an anchor or dowel that does not pass the test acceptance criteria specified in this specification. Submit failed anchor or dowel documentation to the Resident Engineer. The documentation must include, but not be limited to, the following:

a. Exact location of failed anchor.

b. Reason for failure.

c. Repair steps taken.

d. Inspector’s name.

e. Date of test.

B. Transmit:

1. Product Data:

a. Manufacturer's name.

b. Product Series/Catalog No.

c. Testing results.

d. Mill certificates.

e. Certificate of material origin.

f. Certificate of compliance.

2. Cast-In Concrete Anchors:

a. Mill certificates demonstrating conformance.

3. Post-Installed Concrete Anchors or dowels:

a. Manufacturer's Product Data demonstrating conformance.

b. Manufacturer's written instructions for storage, handling, and installation.

4. Welding: See Section 05 05 23 - Metal Fastening

5. Source Quality Control inspection and test reports.

6. Field Quality Control inspection and test reports.

7. Qualifications:

a. Professional Engineer: License number and current work history.

b. Post-Installed Anchor or Dowel Installer.

1.04 QUALITY ASSURANCE

A. Welder Certification: Current Washington Association of Building Officials certification for each process, method, position, and size of weld executed.

B. Weld Procedure Specification: ANSI/AWS D1.1, D1.4, or D1.5.

C. Post Installed anchors or dowels:

1. Provide an on-site Quality Control Program for all post-installed adhesive anchors or dowels in accordance with ICC-ES AC308 Articles 14.3 and 14.4.

2. Post-installed anchors or dowels must be installed by an installer with a minimum of five years' experience performing similar installations.

3. Installer Training: Conduct thorough training with the manufacturer or the manufacturer's representative for the installer on the Project. Training must consist of a review of the complete installation process for drilled-in anchors including, but not limited to, the following:

a. Hole drilling procedure.

b. Hole preparation and cleaning technique.

c. Adhesive injection technique and dispenser training/maintenance.

d. Anchor element type, material, diameter, and length.

e. Proof loading/torquing.

1.05 DELIVERY, STORAGE, AND HANDLING

A. Deliver cast-in concrete anchor materials to the fabricator tied and identified with plastic tags indicating the mill, melt or heat number, and the grade and size of bar.

B. Store and handle concrete anchors in conformance with manufacturer's written instructions.

1.06 SOURCE QUALITY CONTROL

A. All shop welds must be visually inspected.

PART 2 - PRODUCTS

2.01 PRODUCTS

A. Post-Installed Concrete Anchors and Dowels:

1. Expansion Anchors:

a. Hilti Kwik Bolt TZ, DeWalt Power-Stud+SD2, Simpson Strong-Bolt 2, or approved equal.

2. Adhesive Anchors:

a. Adhesive: Hilti HIT–RE 500-V3, DeWalt Pure110+, Simpson Set-XP, or approved equal.

3. Undercut Anchors:

a. Hilti HDA Undercut, DeWalt Atomic+ Undercut, Simpson Torq-Cut, or approved equal.

4. Screw Anchors:

a. Hilti Kwik HUS-, DeWalt Screw-Bolt+, Simpson Titen HD, or approved equal. Limit the use of permanent screw anchors for non-corrosive interior applications only.

5. Substitute Products: Substitute post-installed concrete anchor products, if submitted, must have current International Code Council Evaluation Service (ICC-ES) or International Association of Plumbing and Mechanical Officials (IAPMO) code report approval for use in cracked concrete.

6. Unless noted otherwise, use galvanized post-installed anchors, or approved equal.

7. Post-installed rebar dowels: ASTM A615/A706, unless noted otherwise.

B. Post-Installed Masonry Anchors:

1. Adhesive Anchors:

a. Hilti HIT-HY 270, DeWalt AC100+ Gold, Simpson Set-XP, or approved equal.

2. Screw Anchors:

a. Hilti Kwik HUS, DeWalt Screw-Bolt+, Simpson Titen HS, or approved equal. Limit the use of permanent screw anchors for non-corrosive interior applications only.

3. Substitute Products: Substitute post-installed masonry anchor products, if submitted, must have current International Code Council Evaluation Service (ICC-ES) or International Association of Plumbing and Mechanical Officials (IAPMO) code report approval for use in cracked concrete.

2.02 MATERIALS

A. Cast-in Concrete Anchors:

1. Reinforcing Bars: ASTM A615/A706, unless noted otherwise.

2. Anchor Rods:

a. ASTM F1554 Grade 36 with ASTM A563A hex nuts.

b. ASTM F1554 Grade 55 S1 with ASTM A563A heavy hex nuts.

c. ASTM F1554 Grade 105 with ASTM A563DH heavy hex nuts.

d. Washers: ASTM F436.

3. Welded Headed Studs: ASTM A108, grades 1015 through 1020, headed stud type, cold finished carbon steel, AWS D1.1, Type B; with fluxed end conforming to ANSI/AWS D1.1.

4. Deformed Bar Anchors: ASTM A1064 with fluxed end conforming to ANSI/AWS D1.1.

B. Welding electrode:

1. Match filler metal requirements in conformance with ANSI/AWS D1.1, D1.4, or AASHTO/AWS D1.5.

2.03 FABRICATION

A. Reinforcing Bars Specification ASTM A706:

1. Fabrication: Section 03 20 00 - Concrete Reinforcing.

2. Welding: ANSI/AWS D1.4.

B. Welded Headed Studs: Weld to structural steel and metal fabrications in conformance with ANSI/AWS D1.1 and manufacturer's written instructions.

C. Deformed Bar Anchors: Weld to structural steel and metal fabrications in conformance with ANSI/AWS D1.1 and manufacturer's written instructions.

2.04 FINISHES

A. Cast-in Concrete Anchors:

1. Anchor Rods:

a. Galvanized Carbon and Alloy Steel: ASTM F2329.

b. Stainless Steel: ASTM F593 Grade 316 CW with ASTM F594 hex nuts and ASTM A240 washers.

PART 3 - EXECUTION

3.01 INSTALLATION

A. Cast-In Concrete Anchors:

1. Anchor Rods: Install anchors as indicated on Issued for Construction Drawings. Secure to formwork or reinforcement to prevent movement during concrete placement. Protect threads until structural steel or metal fabrication is installed.

B. Post-Installed Concrete Anchors or Dowels:

1. Install post-installed anchors or dowels in sound concrete only. Report surfaces showing obvious distress by way of porosity, disintegration, carbonation, and cracks over 0.02-inch in width and 12-inches or longer and within the distance of the embedment length to the Resident Engineer:

2. Preparation for drilling:

a. Scan and identify existing reinforcement must be on surface prior to drilling. Scanning using non-destructive X-ray or ground-penetrating radar procedures is permitted. This includes scanning for both top and bottom surfaces of concrete if the Issued for Construction Drawings indicate there are multiple reinforcement layers. Identify other non-reinforcement embeds. Leave adequate distance between the post-installed anchor or dowel and existing reinforcement or embeds locations to account for scan tolerance.

b. No cutting of reinforcement is permitted without prior written approval from the Resident Engineer. Multi-cutting of the same bar is considered as one cut.

c. Reinforcement is considered to be cut if:

1) For No. 4 through No. 7: Cuts, nicks, or drill into bar body are greater than 1/16-inch.

2) For No. 8 and Larger: Cuts, nicks, or drill into bar body are greater than 1/8-inch.

d. When installing anchors through cut reinforcement, locate the anchoring mechanism at least two anchor diameters beyond the cut reinforcement.

e. If the desired location of the anchor(s) conflicts with reinforcement that is not permitted to be cut, relocate the anchor upon approval from the Resident Engineer.

3. Install post-installed anchors in accordance with the ICC-ES/IAPMO reports and manufacturer's installation instructions. Where installation criteria differ, the order of precedence from highest to lowest is: 1) this Specification; 2) the ICC-ES/IAPMO reports; 3) the manufacturer's installation instructions.

4. Drill holes for post-installed anchors with carbide-tipped bits using rotary hammer drills meeting the requirements of ANSI B212.15 unless ICC-ES AC193 or ICC-ES

AC308 testing demonstrates that using percussive drilling or another type(s) of bit, including core drills, is acceptable. Clean drilled holes of chips, dust, loose material, and water prior to anchor installation. The hole diameters and depths are per the manufacturer's instructions. Check the hole diameter every ten holes for conformance to the hole tolerances specified in ICC-ES AC308 for adhesive anchors, ICC-ES AC193 or ACI 355.2 for mechanical anchors. Verify depth of the concrete member before drilling holes. For embedment depth of the post-installed anchor, do not exceed the greater of 2/3 of the concrete member thickness or the concrete member thickness minus 4-inches, or what is allowed by the manufacturer. Contact the Resident Engineer if these requirements cannot be met based on the actual member thickness.

5. Install anchors or dowels perpendicular to the concrete surface within a plus or minus 5-degree tolerance. Visual inspection for post-installation verification of this criterion is acceptable to verify proper seating of the nut and washer.

6. In areas where concrete has been removed, measure the minimum anchor embedment from the surface of sound concrete.

7. Unless otherwise noted on the Issued for Construction Drawings, use the spacing requirements indicated in the applicable ICC ES/IAPMO report.

8. Bending and welding of post-installed anchors is not permitted.

9. The nut thread engagement for the anchors (studs) must be such that the bolt threads project past the outside face of the nut when completely installed.

10. Do not damage the length identification code on the head of the anchor during installation. Anchor projection to be cut-off is subject to the approval of the Engineer of Record and documentation of the location, embedment, and length code.

11. Drive in unused anchors and cut-off flush. Cut-off anchors are considered an abandoned ungrouted hole for future anchor spacing requirements.

12. Avoid bending anchors to match base plate holes or loosening of anchors by prying sideways after tightening. Ensure that the cone nut of an undercut anchors does not become loose from the stud during the setting or tensioning operation.

13. Non-grouted base plates with a maximum 1/8-inch gap is acceptable as evidenced under exterior edges around the plate provided that 1) the plate exhibits bearing contact within its interior against the concrete surface; and 2) the uneven bearing does not prevent application of the prescribed torque. If an unacceptable bearing contact condition exists, one of the following procedures applies:

    a. Rework the concrete surface to obtain a proper fit.

    b. For gaps of up to 1-inch, grout the base plate instead, using the following technique:

        1) Insert post-installed anchors and set the base plate.

        2) Insert nuts to finger-tight condition.

        3) Install shims positioned no more than 1/2-inch away from the anchors to reduce gaps between base plate shims to 1/8-inch or less at anchor locations.

4) Apply tightening torque. Do not tighten the bolt when interior shims under the base plates have been placed away from anchors so that downward bending of the base plate would result upon tightening. Move shims as close as possible to the anchors before applying the installation torque.

5) Fill the gap with non-shrink grout leaving the shims in place. For base plates on walls where grouting is not feasible, fill the gap with shim plates. Stack the shims but with no more than four shims.

14. Relocating Holes Within Base Plates: Relocate the base plate with bolts no more than 1-inch in any direction with respect to the attachment principal axis unless otherwise noted on the Issued for Construction Drawings.

15. Do not use adhesive anchors for conditions that place constant tensile loads on the anchor.

3.02 FIELD QUALITY CONTROL

A. Post-Installed Concrete Anchors and Dowels:

1. Require full-time special inspection for all adhesive anchor systems together with proof load testing. Proof load testing only does not meet special inspection requirements.

2. Test (Proof) Load: Indicate Tension test (proof) load on the approved shop drawings:

a. For post-installed adhesive anchors or dowels, perform a confined test in accordance with ICC-ES AC308 which is equal to the lesser of:

1) A tensile load equal to 80-percent of the specified nominal yield strength of the anchor bolt material times the tensile area of the bolt; or

2) A tensile load equal to twice the design load and at least 50 percent of the expected ultimate load based on the adhesive bond strength shown in the ICC-ES/IAPMO report, whichever is greater.

3. For post-installed mechanical anchors, perform an unconfined test in accordance with ASTM E488 or ACI 355.2 equal to the lesser of the following. Retighten post-installed anchors tested by this method by applying the installation torque:

a. Tensile load equal to 80-percent of the specified nominal yield strength of the anchor bolt material times the tensile area of the bolt.

b. Tensile load based on a multiplied amplification factor of the anchor design capacity as provided in an approved evaluation report as one of the following:

1) Twice (2x) the maximum allowable tension load (Allowable Stress Design).

2) One and a quarter (1-1/4x) times the maximum design strength of the anchor (Ultimate, LRFD based load capacity).

4. Test Frequency: Unless otherwise specified, the following test frequencies must apply:

Post-Installed Anchor & Rebar Dowel Testing Frequency			
Test Category	**Condition**	**Initial Test Frequency**	**Notes**
A	• All except conditions listed in B below.	100 percent or twenty (20) in single application, whichever is less. Examples of single application: anchor bolt group for one equipment, rebar dowels of same diameter installed to one beam.	1. Testing frequency is only reduced in a single application and subject to the approval of the Resident Engineer and is not to be less than 25 percent or twenty (20), whichever is less. 2. In the next application, location or occasion, or should any anchor tests fail, reset the testing frequency to initial frequency. 3. Do not reduce the number of tests on any adhesive anchor/ dowel installed overhead. 4. Do not reduce the number of tests on any adhesive anchor/ dowel installed in plinth. 5. Anchors to be tested must be randomly selected by the inspector and tested in the presence of the inspector.
B	• Post-installed anchors to wall with load ≤ 250lbs. • Post-installed anchors to paving for sign posts ≤ 6 ft. in. height and ≤ 100 lbs. • Post-installed mechanical anchors supporting distributed systems weighing ≤ 5 lb./ft.	10 percent or minimum of five (5) whichever is greater, in any single application	Increase testing to 50 percent if any anchor fails until 10 anchors not previously tested and randomly selected by the inspector pass, then resume initial test frequency.

5. Acceptance Criteria: A post-installed anchor is acceptable if the test load specified in this specification is attained without:

   a. Slippage of more than:

      1) 1/16-inch for adhesive anchors

      2) 2.5-percent of the embedded length, rounded to the nearest 1/16-inch for mechanical anchors

   b. Bolt failure

c. A sign of damage in the surrounding concrete.

6. Installation Inspection Record:

a. Test Inspection Record: Include in the test inspection record, but not be limited to, the following information:

1) Product description, including product name.

2) Adhesive expiration date.

3) Anchor or rebar diameter and steel grade.

4) General location of anchor and group represented.

5) Method of test or verification.

6) Test results, accepted or rejected.

7) Inspector's name.

8) Date of test.

9) Identification number of testing tool.

END OF SECTION

SECTION 03 20 00

CONCRETE REINFORCING

PART 1 - GENERAL

1.01 SUMMARY

A. Section includes:

1. Requirements for fabrication, welding, and placement of steel reinforcing for concrete, and concrete reinforcing accessories.

B. This Section incorporates by reference the latest revisions of the following documents:

1. American Concrete Institute (ACI):

a. ACI 116R Cement and Concrete Terminology.

b. ACI SPEC-117 Specification for Tolerances for Concrete Construction and Materials.

c. ACI PRC-315 Guide to Presenting Reinforcing Steel Design Details.

d. ACI CODE-318 Building Code Requirements for Structural Concrete and Commentary.

2. American National Standards Institute/American Welding Society (ANSI/AWS):

a. ANSI/AWS D1.4 Structural Welding Code – Reinforcing Steel.

3. American Society for Testing and Materials International (ASTM):

a. ASTM A82/A82M Steel Wire, Plain, for Concrete Reinforcement.

b. ASTM A615/ A615M Standard Specification for Deformed and Plain Carbon-Steel Bars for Concrete Reinforcement.

c. ASTM A706/A706M Standard Specification for Deformed and Plain Low-Alloy Steel Bars for Concrete Reinforcement.

d. ASTM A775/A775M Standard Specification for Epoxy-Coated Steel Reinforcing Bars.

e. ASTM A884/A884M Standard Specification for Epoxy-Coated Steel Wire and Welded Wire Reinforcement.

f. ASTM A970/A970M Standard Specification for Headed Steel Bars for Concrete Reinforcement.

g. ASTM A1035/A1035M Standard Specification for Deformed and Plain, Low-Carbon, Chromium, Steel Bars for Concrete Reinforcement.

h. ASTM A1064/A1064M Standard Specification for Carbon-Steel Wire and Welded Wire Reinforcement, Plain and Deformed, for Concrete.

4. Concrete Reinforcing Steel Institute (CRSI):

a. CRSI Manual of Standard Practice.

b. CRSI Publication, Placing Reinforcing Bars.

C. Definitions:

1. Placing Drawings: Working drawings showing the grade, quantity, size, length, and location of the reinforcing steel necessary for the fabrication and placement of the material, including bending schedules, bending details, and material lists (bills of material).

2. With the above exception, the words and terms used in this Section conform to the definitions given in ACI 116R.

1.02 SUBMITTALS

A. Submit

1. Shop Drawings:

a. Detail reinforcing steel in conformance with ACI 315.

b. Furnish bar lists, bending diagrams and schedules. Include weights on bar lists.

c. Indicate locations for placement of reinforcing and reinforcing support. Include number of pieces, size, and markings of reinforcing steel.

d. Indicate locations of lap splices, welds, mechanical splices, and mechanical anchors.

e. Indicate locations of anchors, hangers, inserts, bolts, conduits, sleeves, block outs, and other items to be cast in concrete for possible interference with reinforcing steel.

f. Identify the specification and grade of the reinforcing steel to be placed at each location.

B. Transmit

1. Product Data

a. Manufacturer’s name

b. Product Series/Catalog No.

c. Testing results

d. Mill certificates

e. Certificate of material origin

f. Certificate of compliance

2. Mill Certificates: For each lot or load of reinforcing steel delivered to the jobsite.

3. Evaluation Reports: Submit Evaluation Reports from the ICC Evaluation Service, Inc., or from a Certified Testing Facility using ICC ES AC133 test procedure, for all:

   a. Mechanical splices.

   b. Mechanical anchorages.

4. Manufactured Products: For each manufactured product submit:

   a. Manufacturer's Product Data.

   b. Manufacturer's written instructions for storage, handling, and installation.

5. Welder Certifications: Submit current Washington Association of Building Officials reinforcing steel welding certifications for each welder, valid for each process, method, position, and bar size used.

6. Welder Procedures Specification: Submit welding procedures specification for all reinforcing steel welds in conformance with ANSI/AWS D1.4.

7. Test Reports:

   a. Reports for weld procedure qualification.

   b. Test reports demonstrating acceptance of weld procedure specifications.

   Shop and field weld inspection reports.

1.03 DELIVERY, STORAGE, AND HANDLING

A. Deliver reinforcing steel to the fabricator in bundles, limited to one size and length of bar, securely tied and identified with plastic tags in an exposed position indicating the mill, the melt or heat number, and the grade and size of bars.

B. Deliver reinforcing steel to the jobsite properly tagged and identified.

   1. Store, block up and protect in a manner that will prevent damage.

   2. Protect from moisture, dirt, grease, oil, and other foreign materials that might impair bond with concrete.

   3. Maintain identification of reinforcing steel after bundles are broken.

   4. Store and handle manufactured items in conformance with manufacturer's written instructions.

PART 2 - PRODUCTS

2.01 MATERIALS

A. Deformed Bars:

   1. Reinforcing Steel Bars:

      a. ASTM A706 Grade as indicated on the Issue for Construction drawings.

      b. ASTM A615, Grade as indicated on the Issue for Construction drawings.

2. Weldable Reinforcing Steel Bars (including Cathodic Protection and Grounding reinforcement): ASTM A706, Grade 60, unless otherwise indicated. Do not Splice or couple Grade 80 bars, unless otherwise noted in the Issue for Construction drawings.

3. Headed Bars: ASTM A970.

4. MMFX Reinforcing Steel: ASTM A1035 CS Grade 100, unless otherwise indicated on the Issue for Construction.

B. Epoxy Coated Bars:

1. Epoxy coating: ASTM A775.

C. Welded Wire Fabric:

1. Plain Wire: ASTM A1064.

2. Deformed Wire: ASTM A1064.

D. Smooth Dowel Bars: ASTM A615 Grade 60.

E. Wire and Plain Bars: ASTM A1064.

F. Tie Wire: ASTM A1064, No. 16 gauge or heavier, black or galvanized, soft or commercial grade steel tie wire.

G. Epoxy Coated Tie Wire: ASTM A884, Class A, Type 1.

H. Epoxy Repair Coating: Liquid two-part, compatible with epoxy material and conforming to ASTM A775.

I. Accessories:

1. Provide reinforcement accessories as required for spacing, assembling, and supporting reinforcement in place. Conform to CRSI Manual of Standard Practice.

2. Provide metal chairs with Class 1 or Class 2 protection.

3. Provide concrete blocks with compressive strength equal to or greater than the concrete being placed.

J. Mechanical Splices:

1. Capable of being installed in clear space indicated.

2. Mechanical Splices must conform with Type 1 or 2 in accordance with ACI 318.

K. Mechanical Anchorages:

1. Capable of being installed in clear space indicated.

2. Capable of developing at least 125 percent of the yield strength of anchored reinforcing bar.

L. Welding Electrodes:

1. Match filler metal requirements in conformance with ANSI/AWS D1.4

2.02 FABRICATION

A. Conform approved placing drawings.

B. Cutting and Bending:

1. Perform cutting and bending at a central location, equipped and suitable for the purpose.

2. Accurately cut and cold bend bars as indicated on the approved placing drawings. Do not heat bars for bending or straightening. Do not bend, rebend or straighten bars in a manner that will injure the material.

3. Do not use straightened bars.

4. Label all bars in conformance with approved placing drawings. Secure like pieces in bundles when appropriate.

C. Welding: ANSI/ AWS D1.4.

2.03 SOURCE QUALITY CONTROL

A. Tolerances:

1. Fabrication: Comply with ACI 117 and CRSI Manual of Standard Practices.

B. Identification:

1. Bundle and tag reinforcing steel with grades and sizes, heat numbers, and suitable identification marks for checking, sorting, and placing.

2. Mark tags with sizes and numbers corresponding to approved placing drawings and schedules.

3. Use waterproof tags and markings that cannot be removed until steel reinforcement is placed in position.

C. Epoxy Coating

1. Epoxy mill thickness: thickness verification

D. Shop Welding Inspection:

1. Inspect all shop welds in conformance with ANSI/AWS D1.4.

2. Nondestructive splice tests on welded direct butt splices of hoop reinforcement for columns and shafts using complete joint penetration must follow WSDOT Standard Specification 6-02.3(24)J.

PART 3 - EXECUTION

3.01 PREPARATION

A. Prior to placing reinforcing:

1. Verify that surfaces over or against which reinforcing is to be placed are clean and in proper condition for placing reinforcement.

2. Verify items to be embedded in concrete are secured in place.

3.02 INSTALLATION

A. General:

1. Install reinforcement in accordance with CRSI Publication, Placing Reinforcing Bars.

2. Install concrete reinforcing in conformance with approved placing drawings.

3. Install reinforcement accurately and secure against movement from concrete placement.

4. Do not cut, bend, or straighten bars in the field unless directed by Resident Engineer.

B. Reinforcing Supports: Support bars on metal chairs, concrete blocks, spacers, and/or hangers, accurately placed and securely fastened to steel reinforcement in place. Support legs of accessories in forms without embedding in the form surface. Support epoxy-coated reinforcing on epoxy coated or other dielectric-polymer-coated wire bar supports, or plastic bar supports.

C. Placing and Tying: Install reinforcing steel in place securely to prevent displacement. Bend ends of wire ties away from forms. Do not secure bars to the sides or bottom of the forms using tie wire. Tie epoxy-coated reinforcing with epoxy-coated tie wire. Tack welding is not permitted on reinforcing steel.

D. Lap Splices: Stagger splices of alternate bars a minimum clear offset of 4 feet between splices, unless noted otherwise on Issued for Construction Drawings, or as indicated on the approved placing drawings.

E. Mechanical Splices: Install in conformance with the manufacturer's written instructions. Where mechanical splices are connected to reinforcement on only one end and embedded in concrete, provide a metal cap on the open end to protect the interior of the splice and prevent intrusion of concrete.

F. Mechanical Anchorages: Install in conformance with the manufacturer’s written instructions.

G. Dowels: Provide additional bars for proper support of dowels where required. Furnish and use templates for placement of column dowels. Provide additional bars for proper support and anchorage where required. Do not bend dowels after embedment.

H. Welded Wire Fabric: For slabs on grade, extend welded wire fabric to within 2 inches of the concrete edge. Lap edges and ends of sheets a minimum of one mesh spacing. Do not extend welded wire fabric through contraction joints. Support welded wire fabric during placing of concrete to ensure required positioning in the slab. Do not place welded wire fabric on grade and raise into position after concrete placement.

I. Concrete Cover: Provide concrete cover over steel reinforcement as shown on Issued for Construction Drawings.

J. Protection of Waterproofing Membrane: Where reinforcement is to be installed over a waterproofing membrane, protect the membrane during installation of the reinforcement to avoid punctures, tears, and abrasion. Notify the Contractor’s Quality Assurance Manager and the Resident Engineer immediately if the membrane is damaged.

K. For installed rebar exposed for 12 months or longer, apply galvanizing paint in accordance with WSDOT Specification 6-02.3(24)B Protection of Materials and 9-08.1(2)B Galvanizing Repair Paint, High Zinc Dust Content. For exposed rebar within 3 miles from a major

saltwater body the Contractor must submit the protective plan to Sound Transit for review and approval.

3.03 FIELD QUALITY CONTROL

A. Placing Tolerances: ACI 117 and CRSI Manual of Standard Practices:

1. Adjustment: Move bars as necessary to avoid interference with other reinforcing steel or embedded items. Do not increase the maximum spacing or reduce the total number of bars. Replace and secure all bars moved to permit access for cleanup operations before the start of concrete placement.

B. Perform the following tests with the Contractor's Quality Assurance Manager and the Resident Engineer present during reinforcing placement:

1. Mechanical Splices:

a. Provide continuous inspection of 100 percent of installed splices.

b. Remove and replace incorrectly installed splices.

2. Mechanical Anchorages and Anchorages:

a. Provide continuous inspection of 100 percent of installed anchorages.

b. Remove and replace incorrectly installed anchorages.

3. Field Welding:

a. Visually inspect all field welds in conformance with ANSI/AWS D1.4.

b. Further inspection requirements are per the Issued for Construction Documents.

C. Perform the following inspections with the Contractor's Quality Assurance Manager and the Resident Engineer present prior to placing concrete:

1. Placement: Visually inspect reinforcing placement for conformance with the placing drawings. Verify the following:

. Bar grade.

a. Bar size, length, and bends.

b. Bar location, quantity, spacing, and cover.

c. Lap splice types, lengths, and locations.

d. Sufficient ties, supports, and side form spacers.

e. Bars are free from foreign materials that might impair bond with concrete.

2. Waterproofing Membrane: Verify integrity of waterproofing membrane.

3.04 CLEANING

A. Clean reinforcement free of foreign materials that might impair bond with concrete.

END OF SECTION

SECTION 03 30 00

CAST-IN-PLACE CONCRETE

PART 1 - GENERAL

1.01 SUMMARY

A. Section includes:

1. Requirements for conveying, placing, finishing, curing, protecting, and testing cast-in-place concrete.

1.02 REFERENCES

A. This Section incorporates by reference the latest revisions of the following documents:

1. American Concrete Institute (ACI):

a. ACI SPEC-301 Specifications for Concrete Construction.

b. ACI PRC-304 Guide for Measuring, Mixing, Transporting, and Placing Concrete.

c. ACI PRC-304.2R Guide to Placing Concrete by Pumping Methods.

d. ACI PRC-305R Guide to Hot Weather Concreting.

e. ACI SPEC-306.1 Standard Specification for Cold Weather Concreting.

f. ACI PRC 308R – Guide to External Curing of Concrete

g. ACI PRC-309 Guide for Consolidation of Concrete.

h. ACI 503.2-503.4 Three Epoxy Specifications.

2. American Society for Testing and Materials (ASTM) International:

a. ASTM C31/C31M Standard Practice for Making and Curing Concrete Test Specimens in the Field.

b. ASTM C33/C33M Standard Specification for Concrete Aggregates.

c. ASTM C39/C39M Standard Test Method for Compressive Strength of Cylindrical Concrete Specimens.

d. ASTM C42/C42M Standard Test Method for Obtaining and Testing Drilled Cores and Sawed Beams of Concrete.

e. ASTM C94/C94M Standard Specification for Ready-Mixed Concrete.

f. ASTM C143/C143M Standard Test Method for Slump of Hydraulic-Cement Concrete.

g. ASTM C150/C150M Standard Specification for Portland Cement.

h. ASTM C171 Standard Specification for Sheet Materials for Curing Concrete.

i. ASTM C172/C172M Standard Practice for Sampling Freshly Mixed Concrete.

j. ASTM C231/C231M Standard Test Method for Air Content of Freshly Mixed Concrete by the Pressure Method.

k. ASTM C309 Standard Specification for Liquid Membrane-Forming Compounds for Curing Concrete.

l. ASTM C470/C470M Standard Specification for Molds for Forming Concrete Test Cylinders Vertically.

m. ASTM C881/C881M Standard Specification for Epoxy-Resin-Base Bonding Systems for Concrete.

n. ASTM C928/C928M Standard Specification for Packaged, Dry, Rapid-Hardening Cementitious Materials for Concrete Repairs.

o. ASTM C1059/C1059M Standard Specification for Latex Agents for Bonding Fresh To Hardened Concrete.

p. ASTM C1064/C1064M Standard Test Method for Temperature of Freshly Mixed Hydraulic-Cement Concrete.

q. ASTM C1702 Standard Test Method for Measurement of Heat of Hydration of Hydraulic Cementitious Materials Using Isothermal Conduction Calorimetry.

r. ASTM E329 Standard Specification for Agencies Engaged in Construction Inspection, Testing, or Special Inspection.

s. ASTM E1745 Standard Specification for Plastic Water Vapor Retarders Used in Contact with Soil or Granular Fill under Concrete Slabs.

3. American Association of State Highway and Transportation Officials (AASHTO):

a. AASHTO M182 Standard Specification for Burlap Cloth Made from Jute or Kenaf and Cotton Mats.

4. Washington State Department of Transportation (WSDOT):

a. WSDOT Standard Specifications for Road, Bridge, and Municipal Construction.

5. City of Seattle:

a. Standard Specifications for Road, Bridge, and Municipal Construction.

B. Definitions:

1. Mass Concrete: Structural concrete is defined as mass concrete when the minimum cross sectional dimension is equal to or greater than 4 feet, or when Type III cement, accelerating admixtures, or cementitious materials in excess of 660 lb/yd3 of concrete are used. Concrete used in shafts meeting drilled shaft concrete mix requirements, a maximum temperature at placement of 70 degrees Fahrenheit, and a minimum amount of 25 percent fly ash or 35 percent slag are

excluded from mass concrete requirements. Exemptions from mass concrete are subject to review and approval process by the Resident Engineer.

1.03 SUBMITTALS

A. Submit

1. Construction Work Plan including provisions for hot weather concreting and curing, cold weather concreting and curing, and wet weather concreting and curing. Provide concrete vibration procedure and description of methods to prevent the formation of aggregate pockets.

2. Shop Drawings for Cast-In-Place Prestressed Concrete: Drawings must be in accordance with WSDOT Standard Specifications Section 6-02.3(26)C, except that submit the drawings to Resident Engineer and not WSDOT as indicated in the submittal procedures.

3. Thermal Control Plan: Mass Concrete

4. Concrete Pre-Pour Hold Point Checklist, see Article 1.04, in this specification.

B. Transmit:

1. For each manufactured product, submit:

a. Manufacturer's Product Data showing conformance with the requirements of this Section.

b. Material Data and Safety Sheets.

c. Manufacturer’s written instructions for storage, handling, and installation

2. Qualifications:

a. Certificate of accreditation for Independent Testing Laboratory Technicians in accordance with ASTM E329 for technical competence to perform specific tests required.

b. Qualifications of concrete placement technicians in accordance with Article 1.04A.

3. Placement Records: Report the location in the finished work of each concrete class, and the start and completion times of each batch of concrete placed.

4. Field Quality Control inspection and test reports and documents:

a. Concrete slump, air content, and temperature results.

b. Concrete compressive strength test results.

c. Concrete truck batch tickets in conformance with ASTM C94/C94M. Include any modifications to water or admixture volumes from the original mix design.

d. Thermal control records

e. Qualifications of Independent Testing Laboratory Technician

1.04 QUALITY ASSURANCE

A. Concrete Placement Personnel: The Contractor's personnel responsible for carrying out concrete activities must possess skills and prior experience in the specific type of work necessary to effectively perform the responsibilities for concrete placement. Only technicians whose qualifications have been reviewed by the Resident Engineer are permitted to be assigned to carry out concrete control activities.

B. Construction Work Plan: Include storage descriptions of methods, materials, labor, and equipment used in:

1. Forming, conveying, placing, curing, and protecting cast-in-place concrete. Provide concrete vibration procedure and description of methods to prevent the formation of aggregate pockets.

2. Sampling and testing cast-in-place concrete.

3. Hot weather concreting, cold weather concreting, and wet weather concreting.

C. Thermal Control Plan: Develop plan with concrete supplier describing means and methods of monitoring internal and differential temperature of mass concrete, and mitigating damage to concrete due to heat of hydration of the cement and attendant volume changes. Include the following:

1. Concrete mix designs.

2. Duration and methods of curing.

3. Methods of controlling interior and differential concrete temperatures.

4. Methods of applying immediate corrective action should the temperature limits be exceeded.

5. Damage from thermal cracking, degradation of concrete strength, or delayed ettringite formation.

6. Temperature monitoring system. Include system description, sensor types and locations, and manufacturer's product information. Furnish readout device with chart recorder. Furnish sample thermal control report.

7. Method of sensor installation, connection to readout device, protection during placement and curing, reading, and decommissioning.

8. Indicate on the concrete thermal control plan which combinations of ambient temperature, concrete temperature, and R-value of the thermal blanket are acceptable for field use. Include checking the thermal control plan as part of the pre-pour checklist. Concrete is only accepted if the combination of concrete temperature and ambient temperature is within the combination that will not exceed the maximum core temperature and maximum differential temperature.

D. Hold points for inspection prior to concrete placement for verifying conformance of reinforcement and formwork include:

1. Substrate preparation.

2. Formwork and blockout installation and release agent application.

3. Reinforcement, embedment for anchors and Mechanical Electrical and Plumbing (MEP), post-tensioning, waterstop product installation.

4. Cleanliness.

5. Thermal Control application.

6. Concrete mix design verification.

7. Concrete Testing.

E. Independent Testing Laboratory technicians must have ACI Grade I Concrete Field Testing Technician Certification.

1.05 DELIVERY, STORAGE, AND HANDLING

A. Ready Mix Concrete: Section 03 05 15 - Cement Concrete.

B. Store and handle manufactured products in conformance with manufacturer's written instructions.

PART 2 - PRODUCTS

2.01 PRODUCTS

A. Patching Mortar: ACI 503.2-503.4 for Epoxy Mortar.

B. Epoxy Adhesive: ASTM C881/C881M:

1. Type II for non-load-bearing concrete, Type V for load-bearing concrete.

2. Select grade and class by project conditions and requirements.

C. Damp Curing Materials:

1. Waterproof Sheet Materials: ASTM C171 waterproof paper with white paper face, polyethylene film pigmented white or white burlap-polyethylene sheeting.

2. Burlap: AASHTO M182, class or weight suitable for the use and location.

D. Curing Compound: ASTM C309, liquid membrane-forming curing compound:

1. Type 1 for concrete not exposed to sunlight, Type 1-D with white fugitive dye for concrete exposed to sunlight.

2. Class A or B as appropriate for use and location.

E. Patching Materials Other Than Cement:

1. Cement mortar modified with a latex bonding agent conforming to ASTM C1059/C1059M Type II.

2. Epoxy mortars and epoxy compounds that are moisture-insensitive during application and after curing, that embody an epoxy binder conforming to ASTM C881/C881M, Type III. Select type, grade, and class appropriate for the application.

3. Non-shrink grout: Section 03 62 00 - Non-Shrink Grout.

4. Packaged, dry concrete repair materials conforming to ASTM C928/C928M

F. Evaporation Retarder:

1. Eucobar by Euclid Chemical.

2. Evapre by W. R. Meadows.

3. Aquafilm by Dayton Superior.

G. Vapor Retarder:

1. Carlisle Coating and Waterproofing, Inc.; Blackline400.

2. Stego Industries, LLC; Stego Wrap 15 mil Class A.

3. Grace Construction Products, W.R. Grace & Co.: Florprufe 120.

4. Raven Industries Inc.: Vapor Block 15.

5. Reef Industries, Inc.: Griffolyn Type-105.

H. Sealers:

1. Reference Specification Section 07 19 10 - Water and Graffiti Repellents.

2. Silane Sealer with 40 percent solids:

a. Baracade Silane 40 by Euclid Chemical.

b. MasterProtect H 440HZ by BASF.

2.02 MATERIALS

A. Portland and Hydraulic Cement for Site-Mixed Repair Materials:

1. ASTM C150/C150M, type and brand to match cement used in concrete to be repaired.

2. ASTM C595/C595M, type and brand to match cement used in concrete to be repaired.

3. Provide white Portland Cement where required to match surrounding concrete.

B. Fine Aggregate for Site-Mixed Repair Materials:

1. For Bonding Grout: ASTM C33/C33M washed clean sand passing a Number 30 sieve.

2. For Patching Mortar: ASTM C33/C33M washed clean, graded fine aggregate of suitable size for areas to be repaired. Aggregate up to Size Number 8 is permitted to be used for repair of larger defects.

2.03 MIX DESIGNS

A. Mix Designs: Section 03 05 15 - Cement Concrete.

2.04 MEASURING, BATCHING, AND MIXING

A. Measure, batch and mix Cement Concrete in conformance with ASTM C94:

1. Use central-mixed concrete transported to the jobsite in truck mixers.

2. Use truck mixers equipped with:

a. Automatic device for recording number of revolutions of drum prior to completion of mixing operation.

b. Either accurately calibrated water tanks or water meters.

PART 3 - EXECUTION

3.01 PREPARATION

A. Notification: Prior to each concrete placement:

1. Notify the Resident Engineer at least 24 hours prior to actual placement, and not later than 3 pm on the day prior to placement.

2. Notify the Resident Engineer at least 48 hours prior to actual placement when schedules require concrete placement at times other than normal working hours or for mass concrete pours.

3. Notify the Resident Engineer of the location of the placement and the concrete mix to be placed.

B. Prior to placement, verify the following:

1. Formwork installation conforms to Section 03 11 00 - Concrete Forming.

2. Reinforcing placement conforms to Section 03 20 00 - Concrete Reinforcing.

3. Embedded items are located correctly and secured to resist movement.

4. For concrete cast on earth, also verify the subgrade is well drained; free of debris, free of frost and ice; and moist with no muddy spots, soft spots, or ruts.

5. Configuration of mild steel and post-tensioning allow for concrete flowability and consolidation.

C. Topping Slab:

1. Topping applied to fresh concrete: Do not begin placement of topping until water ceases to rise to surface, and water and laitance have been removed from base slab surface.

2. Topping applied to hardened concrete: Remove dirt, loose material, oil, grease, paint and other contaminations, and leave a clean surface.

D. Construction Joints:

1. Locate construction joints as indicated on the Issued for Construction Documents, and according to Section 03 11 00 - Concrete Forming.

2. Form construction joints straight and as inconspicuous as possible, and in vertical and horizontal alignment with the structure.

3. All joints must be horizontal, vertical, or perpendicular to the main reinforcement.

4. Do not use an edger on any construction joint, and remove any lip or edging prior to adjacent pour.

5. Install waterstops in conformance with Section 03 15 13 - Waterstops.

6. Before placing fresh concrete against cured concrete, remove all laitance, thoroughly clean the cured surface, and intentionally roughen the surface to a full amplitude of approximately 1/4 inch.

E. Obtain acceptance of preparation from the Resident Engineer and special inspection firm prior to placement.

F. Waterproofing Membrane: Where concrete is to be placed over a waterproofing membrane, obtain acceptance of the membrane integrity from the Resident Engineer prior to concrete placement.

G. Weather Considerations:

1. Wet Weather: Do not place concrete while rain, sleet, or snow is falling unless protection is provided. Do not allow rain, sleet or snow to increase mixing water or damage unformed surfaces.

2. Hot Weather: Conform to ACI 305R.

3. Cold Weather: Conform to ACI 306.1.

3.02 MEASURING, BATCHING AND MIXING

A. Measure, batch and mix Cement Concrete in conformance with ASTM C94/C94M:

1. Use central-mixed concrete transported to the jobsite in truck mixers.

2. Use truck mixers equipped with:

a. Automatic device for recording number of revolutions of drum prior to completion of mixing operation.

b. Either accurately calibrated water tanks or water meters.

3.03 DELIVERY

A. Refer to Section 03 05 15 - Cement Concrete.

3.04 ADJUSTMENT

A. For slump adjustment, refer to Section 03 05 15 - Cement Concrete.

3.05 PLACEMENT

A. Conveying:

1. General:

a. Convey concrete rapidly from mixer to the place of final deposit using methods that prevent segregation and loss of ingredients, and will ensure the required quality of concrete.

b. Do not use aluminum pipes or chutes.

c. Conform to ACI 304R.

2. Pumping:

a. Conform to ACI 304.2R.

b. Use pumping equipment that permits placement rates that avoid cold joints and prevent segregation in discharge of pumped concrete.

c. Support pump hoses so that reinforcement is not moved from its original position.

B. Depositing:

1. Place concrete continuously in one horizontal layer or in several horizontal layers with fresh concrete deposited over previous placements that are still plastic.

2. Do not place concrete that has surface-dried, partially hardened, or contains foreign material.

3. Do not drop concrete freely through reinforcing which may cause segregation.

4. Do not drop concrete freely more than 5 feet. When placing vertical sections of greater heights, use openings in the form, elephant trunks, tremies, or other approved devices to reduce the free drop.

5. Placement Using Tremie Methods: Place concrete in or under water in conformance to ACI 304R.

6. When a truck is being sampled, do not place concreteuntil tests demonstrate the concrete conforms to temperature, air content, and slump requirements.

C. Consolidating:

1. Consolidate concrete by mechanical vibration in conformance with ACI 309R.

2. Thoroughly work concrete around reinforcement and embedded items and into corners of forms to eliminate air and rock pockets. Insert and withdraw the vibrator vertically at uniform spacing over the entire area of the placement. Space the distance between insertions such that the influence zones of each insertion overlap. Do not drag vibrators to move concrete horizontally.

3. Drop the vibrators to a depth as to ensure consolidation towards the bottom of all vertical elements and through congested areas. Drop vibrators to depth multiple times to bottom of elements. Keep vibrators in position for a sufficient amount of time to consolidate.

4. Use internal vibrators of the largest size and power that can properly be used in the Work. Maintain vibrators and provide sufficient back-up units on site.

5. Thoroughly and Systematically vibrate concrete placed around waterstopsto avoid air entrapment, and provide positive contact between the waterstop and concrete. Prior to completion of the concrete placement, clean the exposed portion of the waterstopof all foreign objects to ensurepositive contact between the waterstop and concrete.

6. Provide sufficient windows in the forms or limit the forms in height to allow visual observation of the concrete such that the vibrator operator can observe the concrete being consolidated to ensure good quality workmanship. Conduct vibration using competent, skilled, and experienced workers.

3.06 CURING AND PROTECTION:

A. Evaporation Retarder: Apply evaporation retarder to unformed concrete surfaces for stations and garages according to manufacturer's written instructions after placing, screeding, and bull floating or darbying concrete, but before float finishing.

1. Evaproation Retarder is not required when the Curing Procedures demonstrate that moisture loss will not exceed 0.2 lb/sq.ft x h (1 kg/sq.m x h) before and during finshing operations. Base such determination upon concrete mix characteristics and ambient environmental conditions at time of placement.

B. Curing Unformed Concrete Surfaces at Station Platforms:

1. Cure the concrete surfaces in accordance with the WSDOT Standard Specifications Section 6-02.3(11)B, except as noted below:

a. The wet curing requirement as described must remain in place for at least 7 - consecutive calendar days.

b. Curing concrete by spraying curing compound only is not allowed for station platforms.

C. Curing Unformed Concrete Surfaces other than Station Platforms:

1. Apply evaporation retardant, immediately after placing, in accordance with manufacturer's instructions.

2. Apply curing compound in accordance with manufacturer's instructions.

D. Curing Formed Concrete Surfaces:

1. Keep absorbent wood forms wet until they are removed.

2. If formwork ties are loosened during curing period, moist cure after loosening forms. If removing forms before the end of curing period, apply curing compound within 10-minutes after formwork is removed.

3. Do not loosen formwork ties prior to minimum time for form removal per Table 03 11 00-A in Section 03 11 00 - Concrete Forming.

E. Protection:

1. Immediately after placing, protect concrete from premature drying, excessively hot or cold temperatures, mechanical injury, and staining.

2. Protect concrete during the curing period from mechanical and physical stresses due to heavy equipment movement, avoid subjecting the concrete to load stress, load shock, or excessive vibration.

3. Where concrete surfaces will receive architectural finishes, such as clear or penetrating pigmented sealer/densifier, resilient floor coverings or paint, ensure membrane-forming curing compound does not leave a coating or residue that will impair application or bond of sealers, adhesives, paints, and coatings with concrete.

4. Comply with ACI 301 and ACI 306.1 for cold weather protection during curing.

5. Comply with ACI 301 and ACI 305.1 for hot-weather protection during curing.

F. Parking Garages:

1. See Specification Section 07 19 10 - Water and Graffiti Repellents for sealer.

2. Cure concrete in accordance with ACI 301, including duration of curing period.

3.07 REPAIR OF SURFACE DEFECTS

A. General:

1. Where the surface is to be textured, repair tie holes and surface defects before texturing.

2. Manufactured repair materials are permitted in lieu of site-mixed repair materials. Apply manufactured repair materials in conformance with manufacturer's printed instructions.

3. Repair concrete damage caused by construction activities, such as accidental equipment impact, temporary anchor bolts and construction equipment connections.

4. Repair all surface defects greater than 1/4 inch.

5. See Specification Section 03 35 00 - Concrete Finishing for concrete finishing requirements.

6. Prior to placement of repair material, surfaces must be saturated with clean water. Concrete substrate to be in a saturated, surface dry (SSD) condition with no standing water, minimum of four (4) hours prior to placing repair material. Bonding agents or scrub coats are be permitted based on the manufacturers requirements of the repair material.

7. Patching Mortar Aggregate: ASTM C33/C33M, washed clean, graded fine aggregate of suitable size for areas to be repaired. Clean coarse aggregate up to Size Number 8 are permitted be added for repair of larger pockets and voids.

8. Commerical Patching Mortar: Latex-modified cement mortar is permitted to be furnished if appropriate for the use.

9. Pre-Approved Repair Procedures do not substitute the requirements of Section 01 45 00 – Quality Control for non-conformity processes. Document defects in Non-Conformance Report (NCRs) and submit to the Resident Engineer for approval..

B. Site-Mixed Repair Materials:

1. Patching Mortar:

a. Use same materials as the concrete to be patched with no coarse aggregate. Do not use more than one part cement to 2-1/2 parts sand.

b. For repairs in exposed concrete, substitute white cement for a portion of the gray cement to produce a mix matching the surrounding concrete color when dry. Determine the proportion of white cement by trial mixes and test areas, prior to repair of actual defective areas.

C. Repair of Tie Holes:

1. Fill all tie holes, unless otherwise noted.

2. If cement patching mortar is used for plugging, clean and dampen tie holes before application.

3. At stations, form tie plugs must be used per Section 03 11 00 – Concrete Forming.

D. Removal of surface stains and deposits.

1. Remove stains, rust, efflorescence, and surface deposits considered objectionable by the Resident Engineer.

3.08 THERMAL CONTROL

A. Limit concrete absolute maximum allowable internal temperature to 160 degrees Fahrenheit. Limit maximum differential temperature to 35 degrees Fahrenheit, between the middle of the placement and at a point 2 inches interior to the surface.

B. Demonstrate that concrete temperatures do not exceed the specified limits:

1. Test concrete temperatures in conformance with ASTM C1702.

2. Record internal and surface temperatures:

a. Hourly until internal concrete temperature has dropped to less than 90 percent of the maximum recorded.

b. As necessary until trend indicates internal and surface concrete temperatures are converging.

3. Provide chart recorder to document temperatures and submit records as part of Article 1.04, in this specification.

3.09 FIELD QUALITY CONTROL

A. Independent Testing Laboratory: Use an Independent Testing Laboratory to perform the following:

1. Observe concrete batching and mixing operations.

2. Record all concrete batched

3. Record all concrete delivered to the project

4. Collect and check concrete truck batch tickets

5. Visually inspect concrete placement

6. Sample and test concrete

7. Obtain drilled cores of concrete, if required by the Resident Engineer

8. Observe installation of temperature measurement devices in mass concrete, manage quality of recording process, and access and review electronic temperature data.

9. Prepare reports on all inspection and test results

B. Strip concrete formwork and inspect concrete quality prior to the next pour of the same element. Strip formwork for concrete when there is no next pour no later than one week after the required time period to ensure quality inspection in time.

C. Provide additional labor, materials, or equipment required to assist the Independent Testing Laboratory in obtaining and handling samples at the site.

D. Provide and maintain for the sole use of the Independent Testing Laboratory adequate facilities for safe storage and proper curing of concrete test specimens on site for initial curing.

E. Confirm concrete curing time is maintained for required time.

F. Concrete Sampling:

1. Obtain composite samples in compliance with ASTM C172. Select the trucks or batches of concrete to be tested on a random basis. Obtaining samples at the truck is permitted if the Contractor determines the slump loss during pumping by comparing the slump at the truck with the slump at the end of the pumpline using the comparative test and the Contractor establishes the slump requirement at the truck based on the slump loss (See ACI 301 Optional Requirements Checklist Section 4.2.2.2).

2. Obtain at least one composite sample for the first batch of concrete, and then for each 100 cubic yards, or fraction thereof, of each concrete mixture placed in any one day. When the total quantity of a given concrete mixture is less than 50 cubic yards, test the first batch of concrete, and at least one other batch.

3. Determine slump of each sample in compliance with ASTM C143/ C143M.

4. Determine air content of each sample in compliance with ASTM C231/ C231M.

5. Determine temperature of each sample in compliance with ASTM C1064/ C1064M.

6. Do not place concrete before slump, temperature, and air content tests demonstrate concrete is within acceptable limits.

7. Conduct compressive strength tests of each sample in compliance with the following:

a. Mold and cure three cylinders in compliance with ASTM C31/ C31M. Record any deviations from the ASTM requirements in the test report. It is optional for the Contactor to make additional cylinders

b. Test cylinders in compliance with ASTM C39/ C39M. Test one specimen at seven days for information and two specimens at 28 days for acceptance, unless otherwise specified.

G. Evaluation and Acceptance of Tests:

1. Acceptance of Concrete:

a. The compressive strength tests results for acceptance of each sample shall be the average of the compressive strengths from the two specimens tested at 28 days.

b. If one specimen in a sample shows evidence of improper sampling, molding, or testing, discard the specimen and consider the strength of the remaining cylinder to be the test result.

c. If both specimens in a sample show any defects, both specimens must be discarded.

d. Compressive strength tests will be considered acceptable if the average compressive strength of all 28-day specimens of three consecutive sample tests are equal to or exceed the specified 28-day compressive strength,

and if no individual specimen compressive strength is more than 300 pounds per square inch below the specified 28-day compressive strength.

2. Test Cores: If concrete strength is not considered acceptable, or if there is a likelihood of low strength concrete, a significant reduction in load-carrying capacity or an absence of desired durability in the concrete, the Resident Engineer shall determine if test cores shall be drilled for determination of in-place strength:

   a. Obtain and test specimens in conformance with ASTM C42. Take three cores from each area as directed by the Resident Engineer.

   b. Test cores will be considered acceptable if the average of the three cores is equal to at least 85 percent of the specified 28-day compressive strength and no single core is less than 75 percent of the 28-day compressive strength. Locations represented by erratic core strengths are permitted to be retested at the direction of the Resident Engineer.

   c. Perform rebar scanning when determining core locations..

   d. Submit coring and core repair plan for the Resident Engineer's review and approval.

3. Non-Conformance Report (NCR): If concrete strength is not considered acceptable, or if there is a likelihood of low strength concrete, a significant reduction in load-carrying capacity or an absence of desired durability in the concrete, the Contractor must submit a Non-Conformance Report (NCR) to Resident Engineer for ST's review and approval including ST structural group. Submit the NCR as soon as possible if signs of low strength concrete are noticed after the formwork removal, and/or the seven day strength test is low.

END OF SECTION

SECTION 03 30 13

CONCRETE AERIAL GUIDEWAY DECKING

PART 1 - GENERAL

1.01 SUMMARY

A. Section includes:

1. Requirements for the concrete placement, finishing, texturing, and curing of the track slab associated with the aerial guideways.

1.02 REFERENCES

A. This Section incorporates by reference the latest revisions of the following documents.

B. Washington State Department of Transportation (WSDOT):

1. WSDOT Standard Specifications for Road, Bridge, and Municipal Construction.

1.03 SUBMITTALS

A. Transmit

1. Qualifications for finishers.

2. Equipment/Tools List: Provide a list of equipment and tools to be used.

1.04 QUALITY ASSURANCE

A. Finishers Qualifications: Finishers having completed work on at least two projects in the last five (5) years that have been accepted by WSDOT or Sound Transit without rework.

1.05 PRECONSTRUCTION MEETING

A. Hold a preconstruction meeting 5 to 10 working days before placing concrete in accordance with WSDOT Standard Specifications Section 6-02.3(10)A.

PART 2 - PRODUCTS

2.01 MATERIALS - GENERAL

A. Use the materials as indicated on the Issued for Construction Drawings and conform to requirements in other Sections.

PART 3 - EXECUTION

3.01 GENERAL

A. Perform the Work described in this Section in accordance with WSDOT Standard Specifications Section 6-02.3(10), unless specified otherwise on the Issued for Construction documents.

3.02 SCREED RAIL SUPPORTS

A. For screed rails, perform the Work in accordance with WSDOT Standard Specifications Section 6-02.3(10)B.

3.03 FINISHING EQUIPMENT

A. The finishing equipment must conform to the applicable provisions of WSDOT Standard Specifications Section 6-02.3(10)C.

B. The plinth dowel bar or other objects on the deck are not to be impacted by finishing equipment

3.04 CONCRETE PLACEMENT, FINISHING, AND TEXTURING

A. Perform the concrete placement and finishing Work in accordance with WSDOT Standard Specifications Section 6-02.3(10)D, except as noted below:

1. Perform the concrete texturing work in accordance with concrete finishing requirements as stated in the Issued for Construction Documents.

2. Do not need to follow the 10-foot straightedge requirement for flatness.

3.05 CURING CONCRETE

A. Cure the concrete surfaces in accordance with the WSDOT Standard Specifications Section 6-02.3(11)B, except as noted below:

1. The wet curing requirement as described must remain in place for at least 7 consecutive calendar days.

2. Curing concrete guideway deck by spraying curing compound only is not acceptable.

END OF SECTION

SECTION 03 30 23

CAST-IN-PLACE SEGMENTAL CONCRETE BOX GIRDER

PART 1 - GENERAL

1.01 SUMMARY

A. Section includes:

1. Requirements for the construction of cast-in-place segmental concrete box girders associated with aerial guideways, and is in accordance with design, dimensions, and details shown in the Issued for Construction Drawings and in accordance with WSDOT Standard Specifications as amended in this specification.

1.02 REFERENCES

A. This Section incorporates by reference the latest revisions of the following documents:

1. American Association of State Highway and Transportation Officials (AASHTO):

a. AASHTO LRFD Bridge Construction Specifications.

2. American Concrete Institute (ACI):

a. ACI 117 Specification for Tolerances for Concrete Construction and Materials and Commentary.

b. ACI 318 Building Code Requirements for Structural Concrete and Commentary.

3. American National Standards Institute/American Welding Society (ANSI/AWS):

a. ANSI/AWS D1.4 Structural Welding Code – Reinforcing Steel.

4. American Society for Testing and Materials International (ASTM):

a. ASTM C1074 Standard Practice for Estimating Concrete Strength by the Maturity Method.

5. Washington State Department of Transportation (WSDOT):

a. WSDOT Standards Specifications for Road, Bridge, and Municipal Construction, M41-10.

b. WSDOT Bridge Design Manual, M23-50.

6. Post-Tensioning Institute (PTI) and American Segmental Bridge Institute (ASBI):

a. PTI/ASBI M50.3 Guide Specification for Multistrand and Grouted Post-Tensioning.

b. PTI/ASBI M55.1 Specification for Grouting of Post Tensioned Structures.

7. Comité Euro-International de Béton-Fédération Internationale de la Précontrainte (CEB-FIP):

a. CEB-FIP Model Code 1990.

B. Definitions:

1. Balanced Cantilever Erection: a method by which the segments are sequentially placed alternately on either side of the pier, cantilevering to a point where a closure joint is cast.

2. Casting Curve or Casting Curve Geometry: The curve of casting geometry that must be followed in order to achieve the theoretical bridge profile and alignment after all the final structural and time dependent (creep and shrinkage) deformations have taken place. The casting curve is a combination of the theoretical bridge geometrical profile grade, alignment, and the camber.

3. Camber: The amount by which the concrete profile at the time of casting must differ from the theoretical geometric profile grade in order to compensate for all structural dead load, post-tensioning, all long-term time dependent deformations (creep and shrinkage) including all the intermediate erection stages and effects (the opposite of deflections).

4. Segment: A modular section of the superstructure and substructure consisting of a certain cross-section shape and length, as detailed on the Design Plans.

1.03 SUBMITTALS

A. Submit:

1. Construction Work Plan:

a. In advance of the start of construction operations, submit to the Resident Engineer a Construction Work Plan for approval that includes complete details, information, and all applicable drawings, materials, and procedures the Contractor proposes for use in constructing that portion of the structure for which the information is furnished.

b. Include a step-by-step procedure and must provide the anticipated time for each construction activity.

c. Work over traffic must include the proposed work schedule, durations, night activities over traffic, precautions for work performed over traffic, and any sidewalk, lane or roadway closures needed to perform the work. The work plan must also include a drainage plan.

2. Erection Manual:

a. In advance of the start of construction operations, submit to the Resident Engineer an Erection Manual sealed by a Professional Engineer licensed in the State of Washington for approval that includes:

1) Complete description of the proposed procedure and sequence of erection

2) Complete details, information, and all applicable drawings, materials, and procedures.

3) Schedule of the timing.

4) Sequence of segment.

5) Curing procedures.

6) Stressing and grouting of post-tensioning.

7) Horizontal and vertical alignment of the cantilever tip.

8) Sequence of constructing cast-in-place closures between spans.

9) Positions and weights of equipment and stored materials at each stage.

10) Effects of erection methods over traffic.

b. Modifications of the structure for erection purposes is permitted with the approval of the Resident Engineer, provided the modifications demonstrate that the details will have no adverse effect on the complete structure.

3. Geometry Control Work Plan:

a. In advance of the start of the casting operation, submit the Geometry Control Work Plan sealed by a Professional Engineer licensed in the State of Washington to the Resident Engineer for approval.

b. The Geometry Control Work Plan must outline the proposed method for surveying work points, establishing formwork set elevations, monitoring as-cast versus theoretical deck shape and elevations, and correcting any deviations from the theoretical vertical profile and horizontal alignment. The plan must include:

1) Regular monitoring plan of the superstructure deflections beginning with the construction of the pier table and concluding with the last cantilever field section.

2) Required measuring equipment, procedures, and the location of control points to be established on each segment.

3) Verification that the Erection Manual is compatible with the Geometry Control Work Plan. If the Contractor proposes a change to a construction procedure that was previously approved, develop a new casting curve and submit for review and approval by the Resident Engineer. The submittal of the revised casting curve must include a proposed method(s) and location(s) for transitioning between the current curve in use and the submitted proposed new curve.

4) Casting curves that include the theoretical geometric horizontal alignment, profile grade, and superelevation appropriately combined with the camber.

4. Camber Curve:

a. In advance of the start of construction operations, submit calculations showing the methods and parameters used in the camber curve development, sealed and signed by a Professional Engineer licensed in the State of Washington, to the Resident Engineer for approval. The Engineer must have experience in preparing a camber curve for a cantilever segmental cast-in-place post-tensioned concrete box girder bridge within the past five years.

b. The camber curve must be of sufficient accuracy to allow the determination of control point settings for accurately casting the segments as outlined in the Geometry Control Work Plan. The preparation of the camber curve must recognize all deviations from straight line and deformations due to the final required alignment and due to dead load, erection loads, and post-tensioning stresses including secondary moments, creep, and shrinkage.

c. Theoretical geometry must include the effects of:

1) Deformations from dead load and construction live load from form travelers and other staged construction materials and equipment, and the expected deformations of the form traveler itself from the wet weight of concrete.

2) Post-tensioning including the effects of secondary moments.

3) Creep and shrinkage.

4) Final bridge profile and alignment.

5) Stage after superimposed dead load when plinths, track and emergency guardrail are installed after falsework is removed.

d. Base the camber curve on the schedule and sequence as outlined in the Erection Manual.

e. For each segment or closure pour, provide the camber curve for:

1) Unloaded formwork launched to casting position (Set-Up).

2) After concrete is placed (As-Cast).

3) After post-tensioning is stressed.

f. Compute the preparation of the camber curve deformations due to creep and shrinkage and the concrete modulus of elasticity using the CEB-FIP Model Code 1990.

g. Include the following items in the camber curve submittal:

1) The modulus of elasticity of superstructure concrete at 28 days, $E_{C.}$

2) The ultimate creep coefficient, Ø.

3) The shrinkage coefficient, $E_{SH.}$

5. Temporary Construction:

a. In advance of the start of construction operations, submit calculations for temporary shoring or other temporary construction that is not fully detailed in the Issued for Construction Drawings and which will be subject to calculated stresses. Design of falsework and/or erection equipment that is not fully detailed in the Issued for Construction Drawings or Erection Manual must be sealed and signed by a Professional Engineer registered in the State of Washington. Include verification of the permanent structure for stresses imposed by the falsework and/or erection equipment with these design calculations.

6. Shop Drawings:

a. Working drawings must include stress sheets, shop drawings, mild steel reinforcement placement drawings, falsework plans, form drawings, and any other supplement plans or similar data required of the Contractor.

b. The mild steel reinforcement placement drawings must include, in addition to that required by concrete reinforcing requirements as state in the Issued for Construction Documents, steel placement plans for localized stresses due to traveler and other temporary construction loads.

c. The detailed, integrated shop drawings must include but are not limited to the following:

1) Fully and accurately dimensioned views showing the geometry of the segment including projections, recesses, notches, openings, blockouts, and other similar features. Each segment must be drawn separately for clarity.

2) Details of mild steel reinforcing size, grade, spacing, and location, including all mild steel reinforcing required in addition to that shown in the Issued for Construction Drawings. The reinforcing steel shown in the Issued for Construction Drawings is the minimum steel required. Detail additional reinforcing steel to be placed in the region immediately surrounding each anchorage device as specified by the anchorage system manufacturer and additional reinforcing steel required to support temporary construction works on the shop drawings.

3) Details and locations of all other items to be embedded in the segments such as inserts, lifting devices, and similar items.

4) Complete details of the casting system to be used, including the forms, traveler, falsework, foundations, and geometry controls.

5) Complete details of the catchment structure for protection of traffic. The catchment structure details must include horizontal and vertical clearances to sidewalks or roadways open to traffic during construction of each cast-in-place segment.

d. Post-Tensioning shop drawings must include but are not limited to the following:

1) Details of the post-tensioning tendons, post-tensioning system, and grouting procedures as required by post-tensioning requirements as state in the Issued for Construction Documents.

2) Tendon plan showing horizontal locations at all points. Detail horizontal curvature of tendons at blockout and anchorages. Show all openings in slabs and beams.

3) Tendon profiles showing chair heights and locations, and any required additional placement steel not shown in the Issued for Construction Drawings. Show the location of each tendon including the locations of grout ports and drains and the method and location of tendon supports.

4) Details of reinforcing around stressing pockets, anchorages, and closures, or where interference with post-tension tendons occur.

5) Reinforcing details necessary to provide distribution of the anchorage forces.

6) Calculated elongation of each tendon at jacking point. Include calculations with shop drawing submittal. Submit calculations sealed by a Professional Engineer licensed in the State of Washington. Indicate the procedure for and sequence of stressing, losses due to anchorage, seating, elastic shortening, creep, shrinkage, relaxation, friction, and wobble used to determine the effective prestress force and anchor reinforcing. The Professional Engineer must have a minimum of 5 years of experience performing similar post-tensioning design.

7) Details and location of all other items such as post-tensioning hardware and similar items.

8) Additional mild reinforcing required to support tendon ducts and at anchorages as outlined by post-tensioning supplier.

e. Longitudinal Construction Analysis: Longitudinal Construction Analysis must include effects of construction loading and be sealed by a Professional Engineer licensed in the State of Washington.

f. Transverse Construction Analysis: Transverse Construction Analysis must include effects of construction loading and be sealed by a Professional Engineer licensed in the State of Washington.

B. Transmit:

1. Complete details of the casting system sealed by a Professional Engineer licensed in the State of Washington. Include the forms, traveler, falsework, and foundations.

1.04 QUALITY ASSURANCE

A. Geometry Control Technicians

1. The Contractor's personnel responsible for carrying out geometry control activities during casting of concrete superstructure segments must possess skills and prior experience in the specific type of work necessary to effectively control the final geometry of the guideway. Geometry Control Technician must have a minimum of 5 years of general bridge construction experience of which 2 years must have been providing geometry control.

2. Prior to beginning work that requires geometry control measurements, submit for review by the Resident Engineer complete information establishing control activities. Only technicians whose qualifications have been reviewed by the Resident Engineer are permitted to carry out geometry control activities.

3. The Contractor's geometry control technician must carry out all geometry control during erection of the guideway as required by these specifications.

B. Erection Superintendent:

1. The Erection Superintendent must have specific knowledge of and experience in the erection of cast-in-place segmental bridges by the balance cantilever method of construction including having prior experience supervising the operation of special erection equipment similar to the equipment required for this project. Erection Superintendent must have a minimum of 10 years of general bridge

construction experience of which 5 years must have been providing balance cantilever erection supervision.

2. Submit to the Resident Engineer evidences that establishes that the proposed the Erection Superintendent has the qualification set out in this specification. Do not start work requiring involvement of the Erection Superintendent until the Resident Engineer has reviewed this submittal and responded with written acceptance of the proposed Erection Superintendent.

3. The Erection Superintendent must be present at the erection site and supervise all critical erection phases including but not limited to:

   a. Load testing of the erection equipment.

   b. Moving of the erection equipment.

   c. Setting up the erection equipment before starting casting operations for a given cantilever.

1.05 ADDITIONAL POST-TENSIONING

A. Provide post-tensioning, in addition to that shown in the Issued for Construction Drawings, as the Contractor deems necessary to accommodate the erection procedure. Submit to the Resident Engineer for approval these proposals with complete calculations and drawings of the effect on the completed structure and at various stages of construction as part of the shop plans. The calculations and drawings must be signed and stamped by a Professional Engineer licensed in the State of Washington.

B. Detension the tendons and remove all post-tensioning added to accommodate the Contractor's erection procedure unless otherwise approved by the Resident Engineer.

C. Fill all ducts provided by the Contractor with grout in accordance with the WSDOT Standard Specifications Section 6-02.3(26)H and these specifications.

PART 2 - PRODUCTS

2.01 EQUIPMENT

A. The Contractor is solely responsible for design, fabrication, assembly, and operation of all equipment to be used for constructing the superstructure(s).

B. Certification of Temporary Equipment:

1. Inspect and certify that form-travelers or other temporary equipment are structural adequate for their intended use in the construction process. Inspection to be performed on the site at the time the equipment is fully assembled. Provide Certification in writing to the Resident Engineer fourteen (14) calendar days prior to placement of segment concrete.

2.02 MATERIALS

A. All material must be as specified in the Issued for Construction Documents.

B. Concrete: Use concrete as specified in Section 03 30 00 - Cast-In-Place Concrete, except as specifically modified in this specification.

C. Reinforcing Steel: Use mild reinforcing steel that meets the requirements of Section 03 20 00 – Concrete Reinforcing.

D. Post-Tensioning System: Use post-tensioning hardware components as specified in the approved Issued for Construction Drawings and specifications. Components are not interchangeable and must comply with the details of the approved post-tensioning shop drawings.

PART 3 - EXECUTION

3.01 PREPARATION

A. Do not begin casting of superstructure segments until the Resident Engineer approves the shop drawings, the required computations, casting manuals, concrete forms, concreting operations, and the post-tensioning system.

B. Do not operate equipment from or placed upon any part of erected superstructure at any stage of construction other than that which specifically meets the requirement of total working load, as allowed by the Issued for Construction Drawings, Erection Manual, or has the approval of the Resident Engineer. This includes the post-tensioning, jointing, jacking, grouting equipment and any other equipment or materials.

C. Work Over Traffic:

1. Anchor traveler and do not move over traffic.

2. Seal forms to prevent leaks.

3. Extend catchment structure beyond work zone using rigid material.

D. Following the placement of the first two segments of each span, the Resident Engineer will conduct a review of safety plan and quality procedures for work over traffic. Prior to placement of the third segments, modify procedures for work over traffic to address any issues identified in the review.

3.02 FORMS

A. Refer to Section 03 11 00 - Concrete Forming in addition to the following information:

1. Form all exposed formed surfaces of each element of the structure with the same material to produce similar concrete surface textures, color, and appearance. Build the details as shown on the Issued for Construction Drawings.

2. Forms must be structurally adequate to produce the segments within permissible tolerances. Incorporate the method and the necessary hardware to adjust and maintain grade and alignment. Include details of the hardware and adjustment procedure in the shop plans.

3. Check and inspect form, as necessary, to ensure proper alignment and geometric accuracy. Do not use forms that fail to meet the specified casting tolerances as outlined in Article 3.06 of this specification, until such corrections are made to product segments within the specified tolerances.

4. Where Sections of forms are to be jointed, an offset of 1/16 inch for flat surfaces, and 1/8 inch for corners and bends will be permitted. Correct offsets greater than 1/8 inch by grinding or otherwise finishing the protrusion of a 1 to 4 maximum slope.

5. The top surface of segments when finished must not deviate more than 1/4 inch from a straight edge 10 feet long placed in any horizontal position on the surface of each side of centerline.

6. Prior to longitudinal post-tensioning the Contractor is permitted to remove side forms and top slab forms on concrete which has reached sufficient strength for the application of longitudinal post-tensioning.

3.04 GEOMETRY CONTROL

A. The Contractor is responsible for geometric control of construction so that the completed structure will conform to the lines, grades, and dimensions and shown on the plans.

B. Verify the elevations and alignment of the structure prior to and after casting each segment and maintain a record of all these checks and of all adjustments and corrections made. Perform all surveying at a time that will minimize the influence of temperature and thermal gradients.

C. Measure deflections of cantilevers as construction progresses and compare with computed deflections. Correct all deviations from the required alignment by modifying the formwork geometry during the subsequent casting operations.

D. Furnish competent engineering and surveying personnel and equipment to establish and verify elevations and alignment of the structure at every stage of constructions.

E. Establish and maintain permanent benchmarks and control points throughout the casting operations. At a minimum, establish vertical control points near the center of each web and horizontal control at the center of the top slab.

F. During casting, make all correction required in the geometry of the segments from the control points established on each segment.

G. Check the as-cast elevations and alignment of the structure, after casting each segment or closure pour. Verify Geometry Control surveying at a time that will minimize the influence of temperature. Provide surveying to an accuracy of 0.01 foot. At a minimum, record the leading edges of pier table and the last three joints at the end of both cantilevers for purposes of geometry control. Maintain a record of all surveys, check readings, adjustments, and corrections.

H. The structure must have a geometric configuration at mean temperature in general conformance with the dimensions shown on the plans for the dead load condition.

I. Keep all geometry control hardware cast into segments (e.g., elevation bolts and alignment hairpins) in place during erection for reference and checking purposes. Fill the hardware void with epoxy after construction completion.

3.05 EMBEDDED ITEMS

A. Furnish and install embedded items such as ducts and anchorages for post-tensioning in accordance with the approved Issued For Construction (IFC) documents and this Specification.

B. Place reinforcing steel in accordance with the approved IFC documents and as required in this specification. Do not remove reinforcing steel to permit proper alignment of post-tensioning ducts or other embedded items without approval from the Resident Engineer. Submit for the Resident Engineer's approval, bending or repositioning of approved IFC Drawing specified reinforcing steel to accommodate proper alignment of the post-tensioning ducts.

C. After installation in the forms, protect the end of the ducts and anchorages at all times to prevent entry of water and debris.

D. Place supporting devices for form travelers or other construction equipment incorporated in superstructure segments into the form before the concrete is cast.

E. Place post-tensioning anchors into the form before the concrete is cast.

F. Temporary blockouts to allow for later installation of anchors are not permitted.

G. Following post-tensioning, fill the recesses in accordance with the approved IFC documents and this Specification.

3.06 TOLERANCES

A. The following tolerances apply to the construction of the superstructure:

Length of Segment	± ½ inch ± 2 inch Per Cantilever
Overall Depth of Segment	± 1 inch
Overall Width (Top Slab)	± ¾ inch
Width of Web	± ¼ inch
Depth of Bottom Slab	± 3/8 inch less than 8 inches ± ½ inch greater than or equal to 8 inches
Depth of Top Slab	± 3/8 inch
Diaphragm Dimensions	± 3/8 inch

B. During set-up survey, set bulkhead ± 0.02 feet from theoretical calculated elevation.

C. Compensate the longitudinal dimensions from segment to segment for any deviations within a single segment so that the overall dimensions of the completed structure conforms to the dimensions shown in the Issued for Construction Drawings.

D. The maximum differential between the outside face of adjacent segments must not exceed 3/16 inches.

E. Transversely, the angular deviation from the theoretical slope difference between two successive segment joints must not exceed 0.001 Rad.

F. Longitudinally, the angular deviation from the theoretical slope change between two successive segments must not exceed 0.003 Rad.

G. The horizontal and vertical position of a pier table (superstructure segment which rests on a pier) must be within 1/4 inches of the longitudinal alignment, grade, and cross-slope required by the approved erection plans. The longitudinal slope must not vary more than 1/250 in ten (10) feet from that required by the approved IFC Drawings and specifications. These tolerances are for relative location of control points, not absolute location. The horizontal and vertical alignments must not deviate from the approved IFC Drawings and specifications by more than 1/8 inches.

H. Ensure the post-tensioning ducts in the final position are within the following tolerances:

1. Entrance and Exit Angles of Tendon Paths: At anchorages and/or at faces of concrete are within ± 3 degrees of the desired angle measured in any direction, and deviations in the alignment are accomplished with smooth transitions without kinks.

2. Angle Changes: At duct joints not greater than ± 3 degrees in any direction and must be accomplished with smooth transitions without kinks.

3. Anchorages: Locate anchorages within ± ¼ inches of desired position laterally and ± 1 inch along the tendon, and maintain minimum cover requirements.

4. Anchorage Confinement Reinforcement: Position anchorage confinement reinforcement in accordance with the approved shop drawings.

5. Limit duct deviation from plan location to ± 3/8 inch vertically and half a duct diameter horizontally. Maintain angle change limits to ensure smooth transition.

6. Orient grout vents entirely upwards from the tendon and drains entirely downwards from tendon.

7. Conflicts:

   a. For conflicts between the traveler embed and post-tensioning duct, the position of the traveler embed must prevail, and adjust the post-tensioning duct locally with the approval from the Resident Engineer.

   b. For conflicts between the reinforcement and post-tensioning duct, the position of the post-tensioning duct must prevail, and adjust the reinforcement locally in accordance with the drawings or with the approval from the Resident Engineer's.

3.07 CONCRETING

A. Do not deposit concrete in forms until the geometry, forms, reinforcements, ducts, and anchorage has been thoroughly inspected and checked.

B. During conveying, placement, and initial set, protect the concrete against undue drying, rise, or fall in temperature and inclement weather. Do not proceed on concrete placement until adequate measures and protection are available to prevent weather damage during conveying and placement.

C. Size and design of concrete placement equipment to permit placing concrete within the specified time. Clean all equipment at the end of each operation or workday and, just prior to reuse, check the equipment again and clean off hardened concrete and foreign materials.

D. Concrete Placement and Consolidation

1. Do not drop concrete more than four (4) feet unless contained by closed chutes or pipes. With the exception of the sloped exterior web form, do not consider the formwork as chutes. Deposit individual loads of concrete into the form and place and consolidate in the required locations. After discharge into the forms, do not move concrete from place to place within the forms by mechanical vibrators or other similar equipment.

2. Place and consolidate concrete such that tolerances are maintained with post-tensioning ducts, post-tensioning anchorages and any other embedded items, and are not damaged.

3. Place concrete in horizontal layers not more than eighteen (18) inches thick except as permitted by the Resident Engineer. Place and compact each layer before the preceding layer has taken initial set. Consolidate each layer as to avoid the formation of a construction joint with a preceding layer which has not taken initial set.

4. Vibration of the concrete to conform to Section 03 30 00 - Cast in Place Concrete with the following additions. Consolidate all concrete using approved vibrators together with any other equipment necessary to perform the work as specified. Use internal vibrators having a minimum frequency of 8,000 vibrations per minute and sufficient amplitude to consolidate the concrete effectively. Provide a minimum of two stand-by vibrators in working condition for emergency use in case of malfunction.

5. Use external vibrators for consolidating concrete when the concrete is inaccessible for adequate consolidation by internal means. Forms must be sufficiently rigid to resist displacement or damage from external vibration.

6. Immediately after completion of placing concrete, remove all accumulations of mortar splashed upon the remaining exposed reinforcement and form surfaces before concrete takes its initial set. Prevent damage or breakage of the concrete-steel bond when cleaning reinforcing steel.

7. No construction joints are permitted within a segment unless show in the Issued for Construction Drawings or approved by the Resident Engineer.

8. Mold and cure all test cylinders representing tests for removal of forms and/or falsework and for release strength under the same conditions and be subject to the same curing materials and the same weather conditions as the concrete represented. Coupled maturity meters are permitted, in accordance with ASTM C1074, to determine concrete strength prior to stressing post-tensioning and removal of forms and/or falsework.

3.08 CURING

A. Cure the top deck concrete surfaced in accordance with Specification 03 30 00 - Cast-In-Place Concrete Curing and Protection- Curing Unformed Concrete Surfaces at Station Platforms except as noted below:

1. Wet cure the top deck with presoaked burlap for the initial curing period until the initial compressive strength of three and half (3.5) ksi is achieved. Thereafter, apply a Type 2 white pigmented curing compound membrane to the top deck.

B. Cure all other elements in accordance with the Section 03 30 00 Cast-In-Place Concrete. Use a Type 1 clear compound on all formed surfaces.

C. Continue curing of the superstructure elements after the initial curing period by application of a membrane curing compound conforming to the requirements of AASHTO M 148 for all exposed surfaces. Apply curing compound in accordance with the manufacturer's instructions. The membrane-curing compound must be of a consistency suitable for spraying at temperatures prevalent at the time of construction operations, and which forms a continuous, uniform film. It must be free from precipitated matter caused by conditions of storage or temperature.

D. For a maturity method for initial concrete strength is used, provide temperature recording devices that will provide an accurate continuous record of the curing temperature.

E. Maintain the concrete surface temperature above 50 degrees Fahrenheit until the weight supporting forms are removed. Determine the necessity for undertaking protective measures.

3.09 INITIAL DECK FINISH

A. Immediately after concrete has been placed and vibrated in a section of sufficient width to permit working, roughly level the surface, then strike off and screed such that a slight

excess of concrete is carried ahead of the screed to insure filling of all low spots. Design the screed rigid enough to hold true to shape. A straight vibratory screed is permitted to be used on the deck.

B. For those elements of the structure to be constructed by balanced methods, move the screed back and forth across the concrete while one end rests on the upper surface of the form (bulkhead) and the other end on the previously cast segment.

C. Screed the surface of the concrete to produce a uniform surface, true to grade and free of voids.

D. After the water sheen has disappeared from the surface of the top slab, but while the concrete is still plastic, apply the final finish to the top slab as specified in Section 03 35 00 - Concrete Finishing.

E. Only minimum hand finishing is permitted and when the Resident Engineer deems the slab surface is being overworked, stop all hand finishing. Only minimal amounts of water is permitted to aid in the finishing process when evaporation rates affect the quality of the finish. Use the fog spray to help retard surface evaporation but must not change the water-cement ratio at the deck surface. During periods of excessive drying, maintain a cover of wet burlap or plastic sheeting on the slab at all times until final cure cover is placed.

3.10 POST TENSIONING

A. Perform post-tensioning and grouting operations in accordance with the Issued for Construction Documents.

3.11 CAST-ON FALSEWORK SPAN AND MIDSPAN CLOSURE POUR

A. The concrete must comply with the same specifications and criteria as the concrete in the segments.

B. Concrete must reach the minimum specified strength as shown in the Issued for Construction Drawings prior to stressing the continuity post-tensioning.

C. Provide tolerances for the closure pour forms as specified for erection.

D. Include the main span and back span closure methods in the Contractor's erection scheme and casting curve.

3.12 REMOVAL OF FORMS

A. After removing the forms, protect the plastic concrete from adverse weather effects.

B. Keep non-weight supporting forms in place until the concrete has reached the strength of three and half (3.5) ksi or as approved by the Resident Engineer. Keep weight supporting forms until the stressing of post-tensioning is completed in accordance with the approved IFC documents.

END OF SECTION

SECTION 03 35 00

CONCRETE FINISHING

PART 1 - GENERAL

1.01 SUMMARY

A. Section includes:

1. Requirements for the finishing of formed and unformed concrete surfaces.

B. Governance: Requirements of this Section as applicable to concrete surfaces exposed to view must govern over concrete forming and finishing.

C. Finishing treatments of floors, walls, ceiling, and other miscellaneous concrete surfaces include the following as scheduled and as indicated on the Issued for Construction Drawings.

1. CIP-0: Formed finish not exposed to view and not required to have architectural CIP concrete finish.

2. CIP-1: Formed finish for exposed to view structural elements.

3. CIP-2: Unformed finish for elevated guideway track slab surfaces, at grade track slab surfaces.

4. CIP-3: Formed finish utilizing formliners.

5. CIP-4: Broom finish medium for garage slabs.

6. CIP-5: Trowel finish for Station Platform Slabs

1.02 REFERENCES

A. This Section incorporates by reference the latest revisions of the following documents:

1. American Association of State Highway and Transportation Officials (AASHTO):

a. AASHTO M182 Standard Specification for Burlap Cloth Made from Jute or Kenaf and Cotton Mats.

2. American Concrete Institute (ACI):

a. ACI 117 Specification for Tolerances for Concrete Construction and Materials.

b. ACI 301 Specifications for Concrete Construction.

c. ACI 303.1 Standard Specification for Cast in Place Architectural Concrete.

d. ACI 303R – Guide to Cast-in-Place Architectural Concrete Practice.

e. ACI 305R Guide to Hot Weather Concreting.

f. ACI 306.1 Standard Specification for Cold Weather Concreting.

g. ACI 347.3R-13 – Guide to Formed Concrete Surfaces.

h. ACI 503.2- ACI 503.4 Three Epoxy Specification.

3. American Society for Testing and Materials (ASTM) International:

a. ASTM E303 Standard Test Method for Measuring Surface Frictional Properties Using Pendulum Tester

4. American National Standards Institute (ANSI):

a. ANSI 326.3 Dynamic Coefficient Of Friction (DCOF) Of Hard Surface Materials.

5. Washington State Department of Transportation (WSDOT)

a. WSDOT Standard Specifications for Road, Bridge, and Municipal Construction:

1) Section 6-02.3(14)C Pigmented Sealer for Concrete Surfaces.

2) Section 9-08.3 Pigmented Sealer Materials for Coating of Concrete Surfaces, color Washington Gray.

1.03 SUBMITTALS

A. Submit:

1. Shop drawings, or diagrams to scale, that indicate the location in plan and elevation of all concrete finishes. Indicate all construction, control and expansion joint locations, and form tie locations for tie holes to remain exposed.

B. Transmit:

1. Product Data: manufacturers' product data for manufactured products specified and indicated.

2. Test results per ASTM E 303 demonstrating coefficient of friction results between 0.6 to 0.8 for horizontal concrete walking surfaces.

1.04 QUALITY ASSURANCE

A. Reference quality assurance requirements in Section 03 30 00 - Cast-In-Place Concrete.

B. Source Limitations for Concrete with CIP-3 or above: Obtain each color, size, type, and variety of concrete material and concrete mixture from single manufacturer with resources to provide cast-in-place concrete of consistent quality in appearance and physical properties.

C. Mock-Ups: Provide mock-ups on site, at least 4 feet wide by 6 feet tall, of finishes of formed surfaces in exposed locations and of exposed slab finishes. Construct mockups under site conditions and meet the minimum goals as specified in ACI 347.3R-13 Paragraph 5.2.1. Demonstrate typical joints, surface finish, texture, corner details, tolerances, and standard of workmanship. Build mockups to comply with the following requirements, using materials indicated for the completed Work:

1. Build mockups in the location indicated in the Project Requirements.

2. Demonstrate curing, cleaning, and protecting of cast-in-place concrete, finishes, and contraction joints, as applicable.

3. Demonstrate penetrations and embedded items such as electrical boxes.

4. Obtain Resident Engineer's approval of mockups before casting finish concrete.

D. Subject to compliance with requirements, approved mockupsare permitted become part of the completed Work if undisturbed at time of Substantial Completion.

PART 2 - PRODUCTS

2.01 MATERIALS

A. See Section 03 30 00 - Cast-In-Place Concrete.

B. For Type 1L cement requirements, see Section 03 05 15 - Cement Concrete.

C. Skim Coat: Commercial polymer modified, Portland cement mortar for thin trowel application, specified by manufacturer for smoothing and patching walls on projects where an ultra-smooth surface is desired.

1. Basis of design product: Raeco Skimwall.

D. Sand Wash: The finish of site area exposed concrete, flatwork elements (excluding the structure) must be at a minimum “as cast” with a light to medium sand wash finish or approved equal finish. Final finish of exposed site concrete elements must be established by means of site mock-up approved by Sound Transit.

E. Sealer Materials: See Section 07 19 10 - Water and Graffiti Repellents.

PART 3 - EXECUTION

3.01 INSTALLATION

A. General:

1. In addition to ACI 303.1 limits on form-facing panel deflection, limit cast-in-place concrete surface irregularities, designated by ACI 347.3R as abrupt or gradual, as follows:

a. For exposed surfaces: SI3, ACI 117, Class A, 1/8 inch.

b. For non-exposed surfaces: SI4, ACI 117, Class B, 1/4 inch.

2. Construct forms to result in cast-in-place concrete finishes that complies with ACI 117, "Specifications for Tolerances for Concrete Construction and Materials."

3. Related Unformed Surfaces: At tops of walls, horizontal offsets, and similar unformed surfaces adjacent to formed surfaces, strike off smooth and finish with a texture matching adjacent formed surfaces.

a. Continue final surface treatment of formed surfaces uniformly across adjacent unformed surfaces unless otherwise indicated.

b. Maintain uniformity of special finishes over construction joints unless otherwise indicated.

B. For Formed Concrete Surface Category and additional requirements as defined in ACI 347.3R-13, refer to table 3.0 below:

TABLE 3.0 - FORMED SURFACE FINISH REQUIREMENTS								
Specified Finish	**Formed Concrete Surface Category (CSC)**	**ADDITIONAL REQUIREMENTS OR EXCEPTIONS TO ACI 347.3R-13**						
		Texture	**Surface Void Ratio**	**Color Uniformity**	**Surface Irregularities**	**Construction and facing-joint**	**Mock-up**	**Form-Facing Category**
CIP-0	CSC1	T1	SVR1	CU1	SI3*	CJ1	No	FC1
CIP-1	CSC3	T3	SVR3*	CU2	SI3	CJ3	Required	FC2
CIP-3	CSC3	T4*	SVR3	CU2	SI4*	CJ4*	Required	FC2
***:** Indicates an exception to standard CSC Category requirements as defined in ACI 347.3R-13, table 3.1a								

C. CIP-0: Formed Finish not exposed to View:

1. Formwork: As specified in Section 03 11 00- Concrete Forming, rough formed finish

D. CIP-1: Formed Finish (Exposed to View Structural Elements).

1. Where surface is only partially obscured from view, such as covered by intermittent cladding panels, the entire continuous surface must conform to CIP-1 requirements

2. Formwork: As specified in Section 03 11 00 - Concrete Forming, for exposed to view surfaces.

3. Finishing Operations:

a. Grout-Cleaned rubbed finish in accordance with ACI 301: Color to match concrete surface. See Section 07 19 10 - Water and Graffiti Repellents for sealer requirements.

E. CIP-2: Unformed Finish (elevated guideway and at-grade track slab surfaces):

1. Finish: Trowel and fine broom transverse to travel direction for permanently exposed top surfaces. Provide intentionally roughened surfaces under plinths and curbs.

F. CIP-3: Formed finish utilizing formliners (As indicated on Issued for Construction Drawings)

1. Formwork: As specified in Section 03 11 00 - Concrete Forming.

G. CIP-4: Broom finish, medium for garage slabs

1. Finish: Trowel and medium broom transverse to travel direction for permanently exposed top surfaces. Provide intentionally roughened surfaces under plinths and curbs.

2. Where traffic coating or similar epoxy floor finishes are required as specified in in the Issued for Construction Documents, refer to manufacturer's instructions for surface preparation and finishing requirements.

3. Slip-Resistance: Test slabs exposed in the completed structure for the dynamic coefficient of friction between 0.6 to 0.8 per ASTM E 303.

4. Work to meet approved mock-up

H. CIP-5: Trowel Finish (Platform slab surfaces and other exposed horizontal surfaces as indicated on Issued for Construction Drawings)

1. Finish: Trowel smooth for permanently exposed top surfaces. Provide intentionally roughened surfaces under plinths and curbs.

2. Topping Slab: Where indicated, provide trowel finish topping slab to meet CIP-5 finish requirements.

3. Slip-Resistance: Test slabs exposed in the completed structure for the dynamic coefficient of friction between 0.6 to 0.8 per ASTM E 303.

4. Work to meet approved mock-up

I. Other Formed Surface Finishes (SF): After removing forms, finish each formed surface as noted below.

1. Specified Finishes: For the surfaces specified below, provide the following surface finishes in conformance with ACI 301:

a. Sump walls: SF-2.0.

b. Walls indicated to receive waterproofing or weather air-barriers: SF-1.0 unless otherwise required by waterproofing manufacturer.

c. Site walls, curbs and plaza elements: as specified in the Issued for Construction Documents.

2. Unspecified Finishes: For surfaces not specified, provide the following surface finishes in conformance with ACI 301: SF-2.0

J. Finishing Unformed Surfaces

1. Placement:

a. Place concrete at a rate that allows spreading, straight edging, and darbying or bullfloating before bleed water appears.

b. Strike smooth the top of walls, buttresses, horizontal offsets, and other similar unformed surfaces and float them to a texture consistent with the finish of adjacent formed surface.

2. Specified Finishes: For the surfaces specified below, provide the following surface finishes in conformance with ACI 301.

a. Invert Slab: Scratch finish.

b. Topping Slab: Trowel finish.

c. Housekeeping and equipment pads: Trowel finish.

3. Unspecified Finishes: for surfaces not specified above, provide the following surface finishes in conformance with ACI 301.

a. Surfaces to receive bonded cementitious materials and tile: Trowel and fine broom finish.

b. Walks; drives: steps: ramps; and surfaces intended to receive waterproofing, roofing, insulation, or sand-bed terrazzo: Floated finish.

c. Interior slabs and flatwork to be exposed in the completed structure and for slabs to receive resilient floor coverings: Troweled finish.

d. Horizontal walking surfaces must have tested dynamic coefficient of friction between 0.6 to 0.8 per ANSI 326.3.

K. Work in hot weather must conform to all requirements of ACI 305R.

L. Work in cold weather must conform to all requirements of ACI 306.1.

3.02 FORMWORK

A. Formwork requirements are according to Section 03 11 00 - Formwork and as supplemented in this Section.

B. Construct forms for easy removal without hammering or prying against concrete surfaces. Provide crush or wrecking plates where there is risk of damage to cast-in-place surfaces due to stripping. Provide top forms for inclined surfaces steeper than 1.5 horizontal to 1 vertical.

C. Close temporary openings with panels tightly fitted to forms and securely braced to prevent loss of concrete mortar. Locate temporary openings in forms at inconspicuous locations.

D. Do not chamfer edges of concrete at stair landings, treads, horizontal walking surfaces or where concrete is to be covered by another material such as tile.

3.03 JOINTS FOR CAST-IN-PLACE CONCRETE

A. Formwork requirements are according to Section 03 30 00 Cast-In-Place Concrete and as supplemented in this Section.

B. Construction Joints: Install construction joints true to line with faces perpendicular to surface plane of cast-in-place concrete so strength and appearance of concrete are not impaired, at locations indicated or as approved by Enginee-of-Record and Architect-of-Record.

C. Control/Sawcut Joints: Form weakened-plane control joints true to line with faces perpendicular to surface plane of cast-in-place concrete so strength and appearance of concrete are not impaired, at locations indicated or as approved by Engineer-of-Record and Architect-of-Record.

1. Saw cut 1/4 inch wide by 3/4 inch deep joints in locations as shown on Issued for Construction drawings. Where joint cannot be cut with walk-behind saw at obstructions, hand cut joint to obstruction. Exercise caution to not damage obstruction materials.

2. Determine optimum time to sawcut based on field sample installation and weather conditions impacting curing at time of concrete placement.

3. Provide Control Joints for every 100-150 Square Feet, with joints spaced at a maximum of 16 feet OC unless noted otherwise on Issued for Construction Drawings.

4. Add sawcuts at reentrant corners in order to avoid diagonal cracking between regularly spaced control joints, unless noted otherwise on Issued for Construction Drawings.

3.04 FIELD QUALITY CONTROL

A. Finishes: Conform to applicable requirements of ACI 347.3R-13.

B. Tolerances: Conform to the applicable requirements of ACI 301. For parts of the structures not covered by ACI 301, conform to the applicable requirements of ACI 117.

C. Report deficiencies to ST resident engineer no later than 24 hours after they are noticed.

3.05 ADJUSTING

A. Remedy for out-of-tolerance work:

1. Sound Transit will accept the designated Floor Sections measuring at or above both of the specified Minimum Local value (MLV) F-Numbers for tolerance compliance as constructed.

2. Grout and/ or re-top the Floor Sections measuring below the specified Minimum Local Value (MLV) F-Numbers as directed by the Resident Engineer.

a. For the purposes of this paragraph, a Floor Section is any rectangular area of approximately 1500 square feet.

3.06 CLEANING

A. Clean cast-in-place concrete surfaces after finish treatment to remove stains, markings, dust, and debris.

B. Wash and rinse surfaces according to concrete finish applicator's written instructions. Protect other Work from staining or damage due to cleaning operations.

C. Do not use cleaning materials or processes that could change the appearance of cast-in-place concrete finishes.

3.07 PROTECTION

A. Protect exposed concrete surfaces as required preventing damage from impact or strains using guards and barriers.

B. Protect concrete from staining, laitance, and contamination during remainder of construction period.

END OF SECTION

SECTION 03 41 00

PRECAST STRUCTURES GENERAL

PART 1 - GENERAL

1.01 SUMMARY

A. This Section includes:

1. Requirements for the fabrication and erection of precast concrete components (prestressed I girders, slab girders and tub girders, precast prestressed deck panels, and other miscellaneous precast structures) and structures associated with elevated guideways and stations, and associated with roadway bridges, as indicated in the Issued for Construction Documents.

1.02 REFERENCES

A. This Section incorporates by reference the latest revisions of the following documents.

1. Washington State Department of Transportation (WSDOT):

a. WSDOT Standard Specifications for Road, Bridge, and Municipal Construction.

b. WSDOT Bridge Design Manual LRFD, M 23-50.

2. American Concrete Institute (ACI):

a. ACI SPEC-301 Specifications for Structural Concrete.

b. ACI CODE-318 Building Code Requirements for Structural Concrete and Commentary.

3. American Welding Society (AWS):

a. AWS D1.1/ D1.1M Structural Welding Code – Steel.

b. AWS D1.4/ D1.4M Structural Welding Code – Steel Reinforcing Bars.

4. Concrete Reinforcing Steel Institute (CRSI):

a. CRSI Manual of Standard Practice.

5. Precast/Prestressed Concrete Institute (PCI):

a. PCI MNL-116 Manual for Quality Control for Plants and Production of Structural Precast Concrete Products.

b. PCI MNL-117 Manual for Quality Control for Plants and Production of Architectural Precast Concrete Products.

c. PCI MNL-120 PCI Design Handbook.

d. PCI MNL-123 Design and Typical Details of Connections for Precast and Prestressed Concrete.

e. PCI MNL-135 Tolerance Manual for Precast and Prestressed Concrete Construction.

1.03 SUBMITTALS

A. Submit

1. Shop Drawings: In accordance with WSDOT Standard Specifications Section 6-02.3(9)A or Section 6-02.3(25)A.

a. Provide details of all connections, joints, accessories, cast inserts, and openings.

2. Concrete for Precast Units and Panels:

a. In accordance with WSDOT Standard Specifications Section 6-02.3(9).

3. Quality Control Plan: in accordance with requirements of Plant Quality System Manual in PCI MNL-116. The precast concrete production not to proceed prior to Sound Transit approval of the Quality Control Plan,

4. Fabricator Qualifications

5. Design Engineer Qualifications

6. Welder Qualifications

B. Transmit:

1. Product Data: Manufacturer's information on accessory products, including pigments, admixtures, inserts and plates.

1.04 QUALITY ASSURANCE

A. Perform the work of this Section in accordance with PCI MNL-116, PCI MNL-117, PCI MNL-120, PCI MNL-123, PCI MNL-135, ACI 301, ACI 318, and CRSI Manual of Standard Practice. Perform welding in accordance with AWS D1.1/D1.1M.

1. Maintain one copy of each document on site.

B. Fabricator Qualifications:

1. Firm having at least ten (10) years of documented experience in production of precast concrete of the type required.

2. Employ a full time on-site Quality Control Manager certified by PCI for Plant Quality Personnel, Level II.

3. Certified Concrete Fabricator that meets the requirements of WSDOT Standard Practice QC7 – Annual Precast Plant Review and Approval Process prior to the start of production.

C. Design Engineer Qualifications:

1. Design precast concrete units under direct supervision of a Professional Structural Engineer with at least five years of experience in design of precast concrete and licensed in State of Washington.

D. Welder Qualifications:

1. Welders must be certified within previous 12 months in accordance with AWS D1.1/1.1M and AWS D1.4/1.4M.

1.05 DELIVERY, STORAGE, AND HANDLING

A. Handling and Storage: In accordance with WSDOT Standard Specifications Section 6-02.3(9)G and 6- 02.3(25)L.

B. Delivery: In accordance with WSDOT Standard Specifications Section 6-02.3(9)H and 6-02.3(25)L.

C. Deliver precast units to project site in such quantities and at such times to ensure continuity of installation.

D. Protect units to prevent staining, chipping, or spalling of concrete.

E. Mark units with date of production in location that will be concealed after installation.

PART 2 - PRODUCTS

2.01 MATERIALS

A. The materials used in the Work must be as indicated on the Issued for Construction Drawings and conform to the applicable provisions of WSDOT Standard Specifications Section 6-02, unless specified otherwise.

2.02 FABRICATION

A. Fabrication must be in accordance with applicable provisions of WSDOT Standard Specifications Section 6-02.3(9).

PART 3 - EXECUTION

3.01 GENERAL

A. Perform the Work described in this Section in accordance with the applicable provisions of WSDOT Standard Specifications Section 6-02, unless specified otherwise.

B. Prestressed Concrete Girder

1. For prestressed concrete girders, perform the Work in accordance with WSDOT Standard Specifications Section 6-02.3(25).

C. Concrete for Precast Units and Panels

D. For concrete for precast units, perform the Work in accordance with WSDOT Standard Specifications Section 6-02.3(9).

3.02 FIELD QUALITY CONTROL

A. Inspection:

1. For inspection of precast units, perform the Work in accordance with WSDOT Standard Specifications Sections 6-02.3(9), 6-02.3(25).

END OF SECTION

SECTION 03 45 00

PRECAST ARCHITECTURAL CONCRETE

PART 1 - GENERAL

1.01 SUMMARY

A. Section Includes:

1. Requirements for:

a. Delegated engineering design of non-structural precast architectural concrete work.

b. Supports, anchors, attachments, and other items cast into non-structural precast concrete units.

c. Grouting under and between units.

1.02 REFERENCES

A. This Section incorporates by reference the latest revisions of the following documents:

1. American Concrete Institute International (ACI).

a. ACI 301 Specifications for Structural Concrete for Buildings.

b. ACI 318 Building Code Requirements for Structural Concrete and Commentary.

2. ASTM International (ASTM):

a. ASTM A36/A36M Standard Specification for Carbon Structural Steel.

b. ASTM A153/A153M Standard Specification for Zinc Coating (Hot-Dip) on Iron and Steel Hardware.

c. ASTM A325 Standard Specification for Structural Bolts, Steel, Heat Treated, 120/105 ksi Minimum Tensile Strength.

d. ASTM A563 Standard Specification for Carbon and Alloy Steel Nuts.

e. ASTM C33 Standard Specification for Concrete Aggregates.

f. ASTM C150 Standard Specification for Portland Cement.

g. ASTM C1107 Standard Specification for Hydraulic-Cement Grout (Non-shrink).

h. ASTM F436 Standard Specification for Hardened Steel Washers.

i. ASTM F959 Standard Specification for Compressible-Washer-Type Direct Tension Indicators for Use with Structural Fasteners.

3. American Welding Society (AWS):

a. AWS D1.1/D1.1M Structural Welding Code – Steel.

b. AWS D1.4/D1.4M Structural Welding Code - Reinforcing Steel.

4. Precast/Prestressed Concrete Institute (PCI):

a. PCI MNL-117 Manual for Quality Control for Plants and Production of Architectural Precast Concrete Products.

b. PCI MNL-120 PCI Design Handbook - Precast and Prestressed Concrete.

c. PCI MNL-122 Architectural Precast Concrete.

d. PCI MNL-123 Design and Typical Details of Connections for Precast and Prestressed Concrete.

e. PCI MNL-135 Tolerance Manual for Precast and Prestressed Concrete Construction.

1.03 SUBMITTALS/ TRANSMITTALS

A. Submittals:

1. Product Data: Manufacturer's information on accessory products, including pigments, admixtures, inserts and plates.

2. Shop Drawings: Indicate layout, dimensions, and cross sections, unit locations, configuration, unit identification marks, reinforcement, connection details, support items, location of lifting devices, dimensions, openings, and relationship to adjacent materials. Provide erection drawings.

a. Include details of mix designs.

b. Include structural design calculations, including loads imposed on structure, prepared by a qualified professional engineer.

c. Include sequencing of erection, procedures, tolerances, and other items necessary for fabrication.

d. Show welded connections using AWS standard symbols.

e. Provide details of all connections, joints, accessories, cast inserts, and openings.

3. Samples:

a. Submit two concrete cast samples, 12 inches by 24 inches in minimum size, illustrating surface finish and texture. Sample to be kept on site for reference and quality control standard.

B. Transmittals:

1. Fabricator qualifications.

2. Maintenance Data: Indicate surface cleaning instructions.

1.04 QUALITY ASSURANCE

A. Perform the work of this Section in accordance with PCI MNL-117, PCI MNL-120, PCI MNL-122, PCI MNL-123, PCI MNL-135, for Architectural quality concrete, ACI 318, and CRSI Manual of Standard Practice. Perform welding in accordance with AWS D1.1.

1. Maintain one copy of each document on site.

B. Fabricator Qualifications:

1. Firm having at least 2 years of documented experience in production of precast concrete of the type required.

2. Plant certified by Architectural Precast Association (APA), or as approved by Resident Engineer.

C. Design Engineer Qualifications: Design precast concrete units under direct supervision of a Professional Structural Engineer experienced in design of precast concrete and licensed in the state of Washington.

D. Welder: Certified within previous 12 months in accordance with AWS D1.1 and AWS D1.4.

1.05 MOCK-UP

A. Provide full size mock-up of each type of unit specified in this Section, with lifting device, and attachment points, and finish in accordance with approved sample.

B. Mock-up may remain as part of the Work, if approved by Sound Transit.

1.06 PRE-INSTALLATION MEETING

A. Convene one week prior to commencing work of this Section.

1.07 PROJECT CONDITIONS

A. Field Measurements:

1. Check actual locations of walls, slabs, framing, and other construction to which work of this Section must fit, by accurate field measurements before fabrication; show recorded measurements on final shop drawings. Coordinate fabrication, delivery and installation schedule with construction progress to avoid delay of work.

2. Where field measurements cannot be made without delaying the Work, guarantee dimensions and proceed with fabrication of products without field measurements. Coordinate construction with work of other trades to ensure that actual dimensions correspond to guaranteed dimensions. Allow for fitting and trimming.

1.08 DELIVERY, STORAGE, AND PROTECTION

A. Deliver precast units to project site in such quantities and at such times to ensure continuity of installation.

B. Handling: Lift and support precast units only from designated support points.

C. Blocking and Lateral Support During Transport and Storage: Use materials that are clean, non-staining, and non-harmful to exposed surfaces. Provide temporary lateral support to prevent bowing and warping, and cracking.

D. Protect units to prevent staining, chipping, or spalling of concrete.

E. Mark units with date of production in location that will be concealed after installation.

PART 2 - PRODUCTS

2.01 DESIGN REQUIREMENTS

A. Design units to withstand design loads and erection forces. Calculate structural properties of units in accordance with ACI 318.

B. Design units to withstand static loads and anticipated dynamic loading, including positive and negative wind loads and thermal movement loads.

C. Design and size components to withstand seismic loads and sway displacement as calculated in accordance with code.

D. Design units to accommodate construction tolerances, deflection of building structural members, and clearances of intended openings.

2.02 MANUFACTURERS

A. Architectural Precast Concrete: Any manufacturer holding an Architectural Precast Association (APA) Plant Certification for the types of products specified; see www.pci.org.

2.03 FORMWORK

A. Provide forms and, where required, form-facing materials of metal, plastic, wood, or other acceptable material that is nonreactive with concrete and will produce required finish surfaces.

B. Unless forms for plant-manufactured prestressed concrete units are stripped prior to detensioning, design forms so that stresses are not induced in precast units due to deformation of concrete under prestress or to movement during detensioning.

2.04 REINFORCEMENT

A. Comply with requirements of Concrete Reinforcing Section.

2.05 CONCRETE MATERIALS

A. Cement: ASTM C150, Type IL – General, Type II – Low-Alkali. or Type III – High Early Strength; Portland type.

B. Fine and Coarse Structural Aggregates: ASTM C33/C33M.

C. Surface Finish Aggregate: Clean, washed natural gravel; size as approved, color as approved, from single source throughout conforming to ASTM C33/C33M.

D. Water: Clean and not detrimental to concrete.

E. Admixtures: Air entrainment as specified in Section 03 30 00, Cast-in-Place Concrete.

F. Water reducing, retarding, or accelerating agents: ASTM C494/C949M, type as selected by fabricator, not containing more than 0.1 percent chloride ions.

G. Grout: Non-shrink, non-metallic, non-corrosive, non-staining, minimum 10,000 psi, 28-day strength, when tested in accordance with ASTM C1107, colored to match precast units.

2.06 FORM LINERS

A. Form-Facing Panels for As-Cast Finishes: Steel, glass-fiber-reinforced plastic, elastomeric urethane, or HDO faced plywood.

1. Units of face design, texture, arrangement, and configuration indicated in Issued for Construction Drawings.

2. Manufactured formliner sizes and patterns selected from manufacturer's standard line.

3. Custom formliners and progressive patterns are prohibited.

B. Source Limitations: Obtain each type of form-facing material from single source from single manufacturer.

C. Form-Release Agent: Commercially formulated, colorless form-release agent that will not bond with, stain, or adversely affect precast concrete surfaces and will not impair subsequent treatments of those surfaces:

1. Formulate form-release agent with rust inhibitor for steel form-facing materials.

2.07 SUPPORT DEVICES

A. Connecting and Support Devices: ASTM A36/A 36M steel; hot-dip galvanized in accordance with ASTM A153/A 153M or Stainless Steel AISI Type A316.

B. Bolts, Nuts, and Washers: ASTM A325 (A325M) heavy hex structural bolts, Type 1, plain, with matching ASTM A563 (A563M) nuts, and washers as follows:

1. Standard Washers: ASTM F436 washers, in finish matching bolts.

2. Compressible Direct Tension Indicators: ASTM F959, Type 325.

C. Primer: Steel elements not embedded in the precast unit, not galvanized, or non- stainless steel shall have a zinc-rich High Performance Coating.

2.08 ACCESSORIES

A. Bearing Pads: One of the following types, as recommended by precast fabricator for application:

1. Elastomeric Pads: AASHTO M251, plain, vulcanized, 100 percent polychloroprene (neoprene) elastomer, molded to size or cut from a molded sheet, Type A durometer hardness of 50 to 70, ASTM D2240, minimum tensile strength 2,250 psi, ASTM D412.

2. Random-Oriented, Fiber-Reinforced Elastomeric Pads: Preformed, randomly oriented synthetic fibers set in elastomer. Type A durometer hardness of 70 to 90, ASTM D2240; capable of supporting a compressive stress of 3,000 psi with no cracking, splitting, or delaminating in the internal portions of pad. Test one specimen for every 200 pads used in Project.

3. Cotton-Duck-Fabric-Reinforced Elastomeric Pads: Preformed, horizontally layered cotton-duck fabric bonded to an elastomer; Type A durometer hardness of 80 to 100, ASTM D2240; complying with AASHTO's "AASHTO Load and

4. Resistance Factor Design (LRFD) Bridge Design Specifications," Division II, Section 18.10.2, or with MIL-C-882E.

5. Frictionless Pads: Tetrafluoroethylene (Teflon), glass-fiber reinforced, bonded to stainless or mild-steel plate, of type required for in-service stress.

6. High-Density Plastic: Multimonomer, nonleaching, plastic strip.

B. Shims for Tread/Riser Units: High density plastic concrete grey color.

C. Sealant: Type specified in Joint Sealers Section.

2.09 CONCRETE MIXTURE

A. Prepare design mixtures for each type of precast concrete required.

B. Design mixtures may be prepared by a qualified Independent Testing Laboratory or by qualified precast plant personnel at architectural precast concrete fabricator's option.

C. Limit water-soluble chloride ions to maximum percentage by weight of cement permitted by ACI 318 or PCI MNL 117 when tested according to ASTM C1218/C1218M.

D. Normal-Weight Concrete Mixtures: Proportion full-depth mixture by either laboratory trial batch or field test data methods according to ACI 211.1, with materials to be used on Project, to provide normal-weight concrete with the following properties:

1. Compressive Strength (28 days): 5,000 psi minimum.

2. Maximum Water-Cementitious Materials Ratio: 0.45.

E. Water Absorption: 6 percent by weight or 14 percent by volume, tested according to PCI MNL 117.

F. Add air-entraining admixture at manufacturer's prescribed rate to result in concrete at point of placement having an air content complying with PCI MNL 117.

G. When included in design mixtures, add other admixtures to concrete mixtures according to manufacturer's written instructions.

H. Provide anchors for embedding units in concrete, either integral or applied to units, as standard with manufacturer.

I. Apply clear lacquer to cut surfaces of extruded aluminum nosing units.

2.10 FABRICATION

A. Fabricate in conformance with PCI MNL-117 and PCI MNL-135.

B. Forms: Accurately construct forms mortar tight and of sufficient strength to withstand pressures due to concrete placing operations, temperature changes, and, when prestressed, pretensioning and detensioning operations. Maintain form work to provide completed precast concrete units of shapes, lines, and dimensions indicated, within specified fabrication tolerances.

C. Use rigid molds, constructed to maintain precast unit uniform in shape, size, and finish.

D. Use form liners in accordance with manufacturer's instructions.

E. Fabricate connecting devices, plates, angles, items fit to steel framing members, inserts, bolts, and accessories. Fabricate to permit initial placement and final attachment.

F. Embed reinforcing steel, anchors, inserts plates, angles, and other cast-in items required for securing units to supporting and adjacent members.

G. Locate hoisting devices to permit removal after erection.

H. Cure units to develop concrete quality, and to minimize appearance blemishes such as non-uniformity, staining, or surface cracking.

I. Fabricate units straight, smooth, and true to size and shape, with exposed edges and corners precise and square unless otherwise indicated.

J. Cast-in Items: Provide reglets, slots, holes, and other accessories in units to receive windows, cramps, dowels, reglets, waterstops, flashings, and other similar work as indicated.

K. Minor patching in plant is acceptable, providing structural adequacy and appearance of units is not impaired.

2.11 FINISH – PRECAST UNITS

A. Panel faces shall be free of joint marks, grain, and other obvious defects. Corners, including false joints shall be uniform, straight, and sharp. Finish exposed-face surfaces of architectural precast concrete units to match approved sample panels and as follows:

1. As-Cast Surface Finish: Provide surfaces free of pockets, sand streaks, and honeycombs. Use light abrasive blast to remove surface sheen without exposing course aggregate.

2. Provide slip resistant sandblasted texture on tread surfaces conforming with ACI 301 “nonslip finish.”

B. Finish other exposed surfaces of architectural precast concrete units by smooth, steel-trowel finish.

C. Finish unexposed surfaces of architectural precast concrete units by float finish.

2.12 FABRICATION TOLERANCES

A. Conform to PCI MNL-117 and PCI MNL-135, except as specifically amended below.

1. 10 feet or less: Plus, or minus 1/8 inch.

2. 10 to 20 feet: Plus 1/8-inch, minus 3/16 inch.

3. Angular Deviation of Plane of Side Mold: 1/32 inch per 3 inches depth, or 1/16-inch total.

4. Openings: Plus, or minus 1/8 inch.

5. Out of Square: 1/8 inch per 6 feet.

6. Thickness: minus 1/8 inch, plus 1/4 inch.

7. Other Dimensions: 1/16 inch.

8. Maximum Variation from Nominal Face Dimensions: Plus, or minus 3/32 inch.

9. Maximum Variation from Square or Designated Skew: Plus, or minus 1/8 inch in 10 feet.

10. Maximum Variation from Thickness: Plus, or minus 1/8 inch.

11. Maximum Misalignment of Anchors, Inserts, Openings: Plus, or minus 1/8 inch.

12. Maximum Bowing of Members: Plus, or minus length/360.

2.13 SOURCE QUALITY CONTROL AND TESTS

A. Concrete Sampling and Testing:

1. Sampling Method: Take representative samples in compliance with ATSM C172. Collect samples from different batches of concrete on a random basis. Place no more than 1/2 cubic yard before slump, temperature, and air content tests demonstrate concrete is within acceptable limits.

2. Sampling Frequency: Obtain at least one composite sample for each 100 cubic yards, or fraction thereof, of each concrete mixture placed in any one day.

3. Tests Per Sample: Perform the following tests on each sample:

a. Slump: ASTM C143.

b. Air Content: ASTM C231.

c. Temperature: ASTM C1064.

d. Compressive Strength:

1) Make a minimum of three specimens from each sample. When additional sets of specimens are required beyond the normal seven and 28-day tests, include a minimum of two specimens in each set.

2) Make and cure specimens in compliance with ASTM C31. Record all deviations from the ASTM requirements in the test report.

3) Test specimens in compliance with ASTM C39. From each set of specimens cast, test one specimen at 7 days for information and two specimens at 28 days for acceptance, unless otherwise specified.

B. Evaluation and Acceptance of Tests:

1. Acceptance of Concrete:

a. Compressive strength tests will be considered acceptable if the averages of all specimens of three consecutive strength test results are equal to or exceed the specified 28-day compressive strength, and no individual strength test result is more than 300 pounds per square inch below the specified 28-day compressive strength.

b. If one specimen in a sample shows evidence of improper sampling, molding, or testing, discard the specimen, and consider the strength of the remaining cylinder to be the test result.

c. If both specimens in a sample show evidence of improper sampling, molding, or testing discard both specimens. Determine acceptance of concrete using test cores. The Resident Engineer may waive this requirement for large pours.

PART 3 - EXECUTION

3.01 EXAMINATION

A. Verify that building structure, anchors, devices, and openings are ready to receive work of this Section.

3.02 PREPARATION

A. Provide for erection procedures and induced loads during erection. Maintain temporary bracing in place until final support is provided.

3.03 ERECTION

A. Deliver anchorage items to be embedded in other construction before start of such work. Provide setting diagrams.

B. Erect units without damage to shape or finish. Replace or repair damaged panels.

C. Erect units level, plumb, and in alignment within allowable tolerances specified below. Provide temporary supports and bracing as required to maintain position, stability, and alignment as members are being permanently connected.

D. Align and maintain uniform horizontal and vertical joints as erection progresses.

E. When units require adjustment beyond design or tolerance criteria, discontinue affected work; advise Resident Engineer.

F. Fasten units in place with mechanical connections, or weld, as indicated in shop drawings. At welded connections, chip off slag, and touch up with primer.

G. Set vertical units dry, without grout, attaining joint dimension with lead or plastic spacers. Pack grout to base of unit. Pack grout between units, tool with standard masonry.

H. Exposed Joint Dimension: Maximum ½-inch.

I. Seal perimeter and intermediate joints in accordance with Section 07 92 00, Joint Sealants.

3.04 ERECTION TOLERANCES

A. Erect members level and plumb within allowable tolerances. Conform to PCI MNL-135, except as specifically amended below.

1. Bowing: Not to exceed 1/360, with a maximum of 3/4 inch over 30 feet.

2. Warpage: Not to exceed 1/16 inch per foot, 1/8 inch maximum.

3. Joint Widths: Plus, or minus 3/16 inch total, 1/40 inch per foot taper.

4. Step in Face: 1/8 inch.

5. Edge Alignment: 1/8 inch.

6. Plumb: Plus, or minus 1/4 inch in 40 feet.

7. Level: Plus, or minus 1/4 inch in 40 feet.

8. Plan Location from Building Grid Datum: Plus, or minus 3/8 inch.

9. Top Elevation from Nominal Top Elevation: Plus, or minus 3/8 inch.

10. Maximum Plumb Variation over Height of Structure or 100 feet (whichever is less): Plus, or minus 1/2 inch.

11. Maximum Jog in Alignment of Matching Faces or Edges: Plus, or minus 3/16 inch.

3.05 ADJUSTING

A. Adjust units so that joint dimensions are within tolerances.

3.06 REPAIRS

A. Repair architectural precast concrete units if permitted by Resident Engineer. The Resident Engineer reserves the right to reject repaired units that do not comply with requirements.

B. Mix patching materials and repair units so cured patches blend with color, texture, and uniformity of adjacent exposed surfaces and show no apparent line of demarcation between original and repaired work, when viewed in typical daylight illumination from a distance of 20 feet.

C. Wire brush, clean, and paint damaged prime-painted components with same type of shop primer.

D. Remove and replace damaged architectural precast concrete units when repairs do not comply with requirements.

3.07 CLEANING

A. Clean surfaces of precast concrete units exposed to view.

B. Clean mortar, plaster, fireproofing, weld slag, and other deleterious material from concrete surfaces and adjacent materials immediately.

C. Clean exposed surfaces of precast concrete units after erection and completion of joint treatment to remove weld marks, other markings, dirt, and stains.

1. Perform cleaning procedures, if necessary, according to precast concrete fabricator's recommendations. Clean soiled precast concrete surfaces with detergent and water, using stiff fiber brushes and sponges, and rinse with clean water. Protect other work from staining or damage due to cleaning operations.

2. Do not use cleaning materials or processes that could change the appearance of exposed concrete finishes or damage adjacent materials.

3.08 PROTECTION OF FINISHED WORK

A. Provide non-combustible shields during welding operations.

END OF SECTION

SECTION 03 62 00

NON-SHRINK GROUTING

PART 1 - GENERAL

1.01 SUMMARY

A. Section includes:

1. Requirements for providing non-shrink grouts as indicated below.

a. Furnishing, mixing, and placing non-shrink, nonmetallic, noncorrosive cementitious grout.

b. Furnishing, mixing, and placing non-shrink, nonmetallic, noncorrosive epoxy grout.

c. Not applicable to Non-Shrink Grout for Post-Tensioning Applications.

1.02 REFERENCES

A. This Section incorporates by reference the latest revisions of the following documents:

1. American Concrete Institute (ACI):

a. ACI 503.2- 503.4 Three Epoxy Specifications.

2. American Society for Testing and Materials International (ASTM):

a. ASTM C109/C109M Standard Test Method for Compressive Strength of Hydraulic Cement Mortars (Using 2-in. cube Specimens).

b. ASTM C157/C157M Test Method for Length Change of Hardened Hydraulic-Cement Mortar and Concrete.

c. ASTM C579 Standard Test Methods for Compressive Strength of Chemical-Resistant Mortars, Grouts, Monolithic Surfacings, and Polymer Concretes.

d. ASTM C827/C827M Standard Test Method for Change in Height at Early Ages of Cylindrical Specimens of Cementitious Mixtures.

e. ASTM C881/C881M Standard Specification for Epoxy-Resin-Base Bonding Systems for Concrete.

f. ASTM C1090 Test Method for Measuring Changes in Height of Cylindrical Specimens of Hydraulic-Cement Grout.

g. ASTM C1107/C1107M Specification for Packaged Dry, Hydraulic-Cement Grout (Nonshrink).

h. ASTM D149 Standard Test Method for Dielectric Breakdown Voltage and Dielectric Strength of Solid Electrical Insulating Materials at Commercial Power Frequencies.

i. ASTM D638 Standard Test Method for Tensile Properties of Plastics.

j. ASTM D5992 Standard Guide for Dynamic Testing of Vulcanized Rubber and Rubber-Like Materials Using Vibratory Methods.

3. United States Army Corps of Engineers (COE):

a. COE CRD-C620 Standard Method of Sampling Fresh Grout.

4. Washington State Department of Transportation (WSDOT).

a. WSDOT Standard Specifications for Road, Bridge, and Municipal Construction.

1) Section 9-20.3(3) Grout Type 3 for Unconfined Applications.

2) Section 9-26.3 Epoxy Grout/Mortar/Concrete.

B. Definitions:

1. Non-shrink grout: A mortar or grout that does not shrink in the plastic state, is dimensionally stable in the hardened state, and bonds permanently to a clean baseplate and concrete substrate.

1.03 SUBMITTALS

A. Transmit

1. Product Data: Provide manufacturer's product data and installation instructions.

2. Certification: Provide certificates of compliance or laboratory test reports that indicate the following:

a. Materials used in the grout are free from metallic components and corrosion-producing elements.

b. Materials meet specified shrinkage and compressive strength requirements.

1.04 DELIVERY, STORAGE, AND HANDLING:

A. Follow manufacturer's instructions for storage, handling, placing and curing.

PART 2 - PRODUCTS

2.01 MATERIALS

A. Cementitious Grout: Provide non-shrink, nonmetallic, noncorrosive cement-based grout conforming to the following requirements:

1. Applicable standard: ASTM C1107/C1107M.

2. Expansion: 0.4 percent maximum at 3, 14, and 28 days. No displacement when tested in accordance with ASTM C157/C157M.

3. Shrinkage at 28 days: none (0.00 shrinkage when tested in accordance with ASTM C827/C827M).

4. Compressive strength, as indicated on the Issued for Construction Drawings, and not less than:

   a. At one day: 1000 pounds per square inch (psi).

   b. At three days: 2500 psi.

   c. At seven days: 3500 psi.

   d. At 28 days: 5000 psi.

5. Initial setting time, after addition of water: approximately one hour at 70 degrees Fahrenheit.

6. Provide nonsag trowelability or flowability as necessary for the particular application.

B. Water: Clean and potable, free of impurities detrimental to grout.

C. Epoxy Grout: Provide nonshrink, nonmetallic, noncorrosive epoxy grout conforming to the following requirements:

1. Grout must be manufactured specifically for use in supporting heavy loads.

2. Expansion: No displacement when tested in accordance with ASTM C827/C827M and ASTM C157/C157M, modified procedures.

3. Shrinkage at 28 days: None (0.00 shrinkage when tested in accordance with ASTM C827/C827M modified procedure using a specific gravity of indicator ball of approximately 1.0) with a minimum effective bearing area (EBA) of 95 percent.

4. Compressive strength, minimum: 10,000 psi at 7 days.

5. Initial setting time: Approximately one hour at 70 degrees Fahrenheit.

6. Provide flowable consistency as necessary for the particular application.

7. Epoxy grouts which are volatile and which give off noxious fumes are not acceptable.

8. Where aerial guideway bears on epoxy grout pads, provide manufacturer documentation that product will meeting the following performance standard.

   a. At maximum depth, grout pad creep will not exceed 1/8 in. over 100 years.

D. Epoxy Adhesive: ASTM C881/C881M, Type V, epoxy-based bonding agent.

E. Elastomeric Grout:

1. Tensile Strength: ASTM D638.

2. Dynamic Deflection: ASTM D5992.

3. Dielectric Strength: ASTM D149.

F. Unconfined non-shrink grout:

1. Meet the requirements of WSDOT Standard Specifications Section 9-20.3(3), Grout Type 3 for Unconfined Applications.

2.02 SOURCE QUALITY CONTROL

A. Inspections and Tests: Perform visual inspections, and shrinkage tests using an approved independent test laboratory, and strength tests as necessary to verify performance requirements of grout. Sample and test grout in conformance with applicable ASTM or COE CRD-620 requirements.

PART 3 - EXECUTION

3.01 PREPARATION

A. Prepare concrete surfaces to receive grout by chipping, sandblasting, water blasting, or other accepted methods specified by the manufacturer to remove defective concrete, laitance, dirt, oil, grease, and other foreign matter to achieve sound, clean, and roughened concrete surfaces, in accordance with the manufacturer's requirements.

B. Cover concrete areas with protective waterproof covering until ready to place grout.

C. Remove foreign matter from surfaces to be in contact with grout. Clean contact steel surfaces as necessary by wire brushing and wiping dust clean.

D. Align and level components to be grouted, and maintain in final position until grout placement is complete and accepted.

E. Install forms for grout about the columns and other spaces to be grouted.

F. Remove protective waterproof covering and clean contaminated surfaces immediately before grouting.

G. Provide air-relief holes in large baseplates and in baseplates where underneath obstructions cause air entrapment.

H. Saturate concrete surfaces with clean water, and remove excess water immediately before grouting.

I. Where necessary or appropriate for better bond, epoxy adhesive is permitted to clean, dry substrate surfaces in accordance with applicable requirements of ACI 503.2-503.4.

3.02 INSTALLATION

A. Mixing:

1. Mix grout ingredients in accordance with the respective manufacturer's instructions. Mix grout materials in proper mechanical mixers.

2. Mix grout as close to work area as possible.

B. Installation:

1. Place grout in accordance with the manufacturer's published instructions. Pour grout from one side only until grout rises at least one inch above the plate on opposite side of said plate. Strapping and plunging or other methods are permitted to be used to force grout to flow under the entire area.

C. Place Grout Type 3 for Unconfined Applications in accordance with requirements of WSDOT Standard Specifications Section 9-20.3(3).

D. Neatly trowel edges of grout base, tapered at an angle of 60 degrees when measured from the horizontal, or as indicated.

1. Do not remove leveling shims for at least 48 hours after grout has been placed.

2. After shims have been removed, if used, fill voids with grout, packing the material with a suitable tool.

3. Do not use grout that has begun to set or if more than one hour has elapsed after initial mixing.

3.03 CURING

A. Cure cementitious grout as specified by the grout manufacturer.

B. Cure epoxy grout as specified by the grout manufacturer.

END OF SECTION

SECTION 04 21 13

BRICK MASONRY

PART 1 - GENERAL

1.01 SUMMARY

A. Section includes:

1. Requirements for the following:

a. Clay Facing Brick.

b. Mortar and Grout.

c. Reinforcement and Anchorage.

d. Flashings.

e. Accessories.

1.02 REFERENCE STANDARDS

A. American National Standards Institute (ANSI):

1. ACI 530/530.1/ERTA - Building Code Requirements and Specification for Masonry Structures and Related Commentaries.

2. ASTM A240 - Standard Specification for Chromium and Chromium-Nickel Stainless Steel Plate, Sheet, and Strip for Pressure Vessels and for General Applications.

3. ASTM A580/A580M - Standard Specification for Stainless Steel Wire.

4. ASTM A666 - Standard Specification for Annealed or Cold-Worked Austenitic Stainless-Steel Sheet, Strip, Plate, and Flat Bar.

5. ASTM C67 - Standard Test Methods for Sampling and Testing Brick and Structural Clay Tile.

6. ASTM C144 - Standard Specification for Aggregate for Masonry Mortar.

7. ASTM C150/C150M - Standard Specification for Portland Cement.

8. ASTM C207 - Standard Specification for Hydrated Lime for Masonry Purposes.

9. ASTM C216 - Standard Specification for Facing Brick (Solid Masonry Units Made From Clay or Shale).

10. ASTM C212 – Standard Specification for Structural Clay Facing Tile.

11. ASTM C270 - Standard Specification for Mortar for Unit Masonry.

12. ASTM C1330 Standard Specification for Cylindrical Sealant Backing for Use with Cold Liquid-Applied Sealant.

13. ASTM C1384 - Standard Specification for Admixtures for Masonry Mortars.

B. Brick Industry Association (BIA):

1. BIA Technical Notes No. 7 - Water Penetration Resistance – Design and Detailing.

2. BIA Technical Notes No. 28B - Brick Veneer/Steel Stud Walls.

3. BIA Technical Notes No. 46 - Maintenance of Brick Masonry.

C. The Masonry Society (TMS):

1. TMS 402/602 Building Code Requirements and Specification for Masonry Structures, as adopted by the AHJ.

1.03 SUBMITTALS

A. Product Data: Provide data for masonry units, fabricated wire reinforcement, weeps, mortar stops, and mortar.

B. Samples: Submit samples of each color of decorative units in the form of straps of (5) or more bricks to illustrate color, texture, and extremes of color range. Submit samples of special shapes, pigmented mortar, weeps, and mortar breaks.

C. Shop Drawings: provide shop drawings indicating spacing and details of ties, control/expansion joints, end conditions, lintels, sills, jambs, and other special conditions. Include wall sections showing coordinated building envelope components including, ledges/ bearing angles, weather barrier, air barriers and flashing and air gap dimensions. Shop drawings shall be fully coordinated with all adjacent and supporting sections.

D. LEED Submittals:

1. Where LEED certification is required by the project, submit the same documentation for approval as required by GBCI as a project submittal. Highlight the relevant LEED information.

2. LEED documentation is to be submitted separately and titled LEED SUBMITTAL.

3. Building Product Disclosure and Optimization credit data: Submit data to support the LEED SUBMITTAL.

1.04 QUALITY ASSURANCE

A. Source Limitations for Masonry Units: Obtain exposed masonry units of a uniform texture and color, or a uniform blend within the ranges accepted for these characteristics, through one source from a single manufacturer for each product required.

B. Source limitations for Mortar Materials: Obtain mortar ingredients of a uniform quality, including color for exposed masonry, from a single manufacturer for each cementitious component and from one source or producer for each aggregate.

C. Comply with provisions of ACI 530/530.1/ERTA, except where exceeded by requirements of the contract documents.

D. Comply with provisions of TMS 402/602, except where exceeded by requirements of the contract documents.

E. Comply with recommendations of Brick Industry Association (BIA):

1. BIA Technical Notes No. 7 - Water Penetration Resistance – Design and Detailing.

2. BIA Technical Notes No. 28B - Brick Veneer/Steel Stud Walls.

3. BIA Technical Notes No. 46 - Maintenance of Brick Masonry.

F. Installer Qualifications:

1. Able to document not less than 5 years' experience regularly engaged in performing commercial quality masonry work of comparable magnitude as work of this Project.

2. Certified member in good standing of the Washington State Conference of Mason Contractors (WSCMC) or accepted by Architect prior to Bid Date. Other Installers who meet or exceed Quality Assurance and Qualifications criteria of WSCMC may submit Bid following acceptance by Architect.

3. Masonry Foreman:

a. Continuously in attendance and conducting supervision for duration of masonry work.

b. Able to document 5 years' experience supervising and laying out masonry construction.

G. Masonry Crew: Completed State approved journeyman apprenticeship training and able to demonstrate qualifications meeting or exceeding apprenticeship standards.

1.05 PRE-INSTALLATION CONFERENCE:

A. Arrange, in accordance with Section 01 30 00 - Administrative Requirements, Meetings & Submittals.

B. Attendance: Contractor, installer, Owner, Architect, manufacturer's representative, and those others requested to attend.

C. Meeting Time: Minimum 2 weeks prior to beginning work of this Section.

D. Location: Project Site.

1.06 MOCK-UP

A. Construct a typical exterior masonry wall corner as a mock-up panel sized minimum 4 feet long by 6 feet high with a minimum 12-inch return; include mortar and accessories, structural backup, wall openings, flashings, sealant-filled vertical control joint at least 16 inches long, mortar barrier, reinforcing, weeps, vapor barrier, and wall insulation in mock- up. Include cavity air/gap of exact depth to match designed wall.

B. Locate where directed by Resident Engineer.

C. Mock-up, if approved by Sound Transit, may remain as part of the Work if undisturbed at time of Substantial Completion.

1.07 DELIVERY, STORAGE, AND HANDLING

A. Deliver, handle, and store masonry units by means that will prevent mechanical damage and contamination by other materials.

1.08 FIELD CONDITIONS

A. Comply with requirements of TMS 402/602 or applicable building code, whichever is more stringent.

B. Maintain materials and surrounding air temperature to minimum 40 degrees F prior to, during, and 48 hours after completion of masonry work.

C. Maintain materials and surrounding air temperature to maximum 90 degrees F prior to, during, and 48 hours after completion of masonry work.

PART 2 - PRODUCTS

2.01 PERFORMANCE REQUIREMENTS

A. Fire-Rated Assemblies: Conform to UL FRD and any applicable local authority having jurisdiction for fire-resistive requirements for fire-rated masonry construction.

2.02 BRICK UNITS

A. Facing Brick: Brick complying with ASTM C216, Type FBS, Grade SW:

1. Type: As indicated in Issued for Construction Drawings.

2. Color and texture: As indicated in Issued for Construction Drawings.

3. Actual size: As indicated in Issued for Construction Drawings.

4. Compressive Strength: As indicated on Issued for Construction Drawings, measured in accordance with ASTM C67.

2.03 MORTAR AND GROUT MATERIALS

A. Portland Cement: ASTM C150/C150M, Type I; color as required to produce approved color sample.

B. Hydrated Lime: ASTM C207, Type S.

C. Mortar Aggregate: ASTM C144.

D. Water: Clean and potable.

E. Color admixture: as defined in Issued for Construction Drawings.

F. Moisture-Resistant Admixture: Water repellent compound designed to reduce capillarity, minimize efflorescence and enhance mortar to brick unit bonding.

G. ASTM C 1384.

H. Mortar for Unit Masonry: ASTM C270, Proportion Specification:

1. Exterior, non-loadbearing masonry; Type N.

2.04 REINFORCEMENT AND ANCHORAGE

A. Joint Reinforcement: Continuous wire (3/16-inch diameter), ASTM A580 Type 316 stainless steel.

B. Masonry Veneer Anchors: 2-piece anchors that permit differential movement between masonry veneer and structural backup, Stainless Steel conforming to A666 for plate and strip stock, and A 580 for wire, Type 316. Structural backup is concrete, CMU or steel stud walls per plans:

1. Anchor plates: Not less than 0.075 inch thick, designed for fastening to structural backup through sheathing by two fasteners; provide design with legs that penetrate sheathing and insulation to provide positive anchorage.

2. Wire ties: Manufacturer's standard shape, 3/16-inch round.

3. Vertical adjustment: Not less than 3-1/2 inches.

4. Seismic Feature: Provide lip, hook, or clip on end of wire ties to engage or enclose continuous horizontal joint reinforcement wire 0.1483-inch diameter.

5. Where control joints occur, provide stabilizing control joint anchors to resist lateral movement. Material and gauge to match others.

2.05 FLASHINGS

A. Stainless Steel: ASTM A240/A240M, Type 304, 0.025-inch-thick mill finish.

B. Lap Sealant: Non-curing Butyl type as recommended by Manufacturer.

C. Install reglets to receive counterflashing where shown per Section 07 62 00 - Sheet Metal Flashing and Trim.

2.06 ACCESSORIES

A. Joint Filler / Backer Rod:

1. Backer Rod: Closed cell polyethylene or neoprene; oversized 50 percent to joint width; self-expanding; maximum lengths available complying with ASTM C1330.

2. Vertical Construction/ Control Joints and perimeter seals at windows and doors: per Section 07 92 00 - Joint Sealants.

3. Expansion Joint Filler or Covers for building seismic and expansion joints: As specified elsewhere in the contract documents.

4. Horizontal Compression Joints: To accommodate vertical deflection at horizontal joints, where indicated on Issued for Construction Drawings: Closed cell neoprene Sponge Rubber to meet ASTM D1056, Non- adhesive type

B. Cavity Vents and Cavity Vent Weeps: UV- stabilized, insect-resistant, free-draining mesh made from polyethylene strands, full height and width of head joint and depth 1/8 inch less than depth of outer wythe:

1. Basis of Design:

a. Mortar Net Solutions: Product: WeepVent.

b. Approved Equal.

2. Color as selected by Architect from manufacturer's standard colors.

C. Cavity Mortar Diverter: Semi-rigid polyethylene or polyester mesh panels, sized to thickness of wall cavity with trapezoidal shaped notches to suspend mortar at unequal heights, and designed to prevent mortar droppings from clogging weeps and vents and allow proper cavity drainage. Integral insect-proof design or provide additional insect screening required by manufacturer.

1. Basis of Design:

a. Mortar Net Solutions: MortarNet with Insect Barrier.

b. Hohmann & Barnard Inc, Mortar Trap.

c. Approved Equal.

D. Cleaning Solution: Non-acidic, not harmful to masonry work or adjacent materials.

2.07 WATER REPELLENTS

A. See Section 07 19 10 - Water Repellents and Graffiti Protection.

PART 3 - EXECUTION

3.01 EXAMINATION

A. Verify that field conditions satisfy product requirements, meet section 1.08 of this specification, and are ready to receive masonry.

B. Verify that related items provided under other sections are properly sized and located.

C. Verify that built-in items are in proper location, and ready for roughing into masonry work.

3.02 COURSING

A. Establish lines, levels, and coursing indicated. Protect from displacement.

B. Maintain masonry courses to uniform dimension. Form vertical and horizontal joints of uniform thickness.

3.03 PLACING AND BONDING

A. Lay solid masonry units in full bed of mortar, with full head joints, uniformly jointed with other work. Lay exposed masonry in bond pattern indicated on Issued for Construction Drawings.

B. Buttering corners of joints or excessive furrowing of mortar joints is not permitted.

C. Remove excess mortar as work progresses.

D. Interlock intersections and external corners, except for units laid in stack bond.

E. Do not shift or tap masonry units after mortar has achieved initial set. Where adjustment must be made, remove mortar and replace.

F. Perform job site cutting of masonry units with proper tools to provide straight, clean, unchipped edges. Do not install masonry units with broken corners or edges.

G. Isolate top joint of masonry veneer from horizontal structural framing members or support angles with compressible joint filler.

3.04 CAVITY CONSTRUCTION

A. Provide not less than 2 inches of air space between back of masonry veneer and face of masonry or concrete wall.

B. Do not permit mortar to drop or accumulate into cavity air space or to plug weep/cavity vents.

C. Install cavity mortar diverter at base of cavity and at other flashing locations in accordance with manufacturer's instructions to prevent mortar droppings from blocking weep/cavity vents.

D. Install cavity vents/weeps in veneer walls at 24 inches on center horizontally above through-wall flashing unless otherwise indicated.

E. Install cavity vents in veneer walls at 24 inches on center horizontally below shelf angles and lintels and at top of walls.

3.05 REINFORCEMENT AND ANCHORAGE - MASONRY VENEER

A. Install horizontal joint reinforcement not more than 15 inches on center vertically and not more than 15 inches on center horizontally.

B. Place masonry joint reinforcement in first and second horizontal joints above and below openings. Extend minimum 16 inches each side of opening.

C. Lap joint reinforcement ends minimum 6 inches.

D. Embed connector sections and continuous wire in masonry joints.

E. Secure veneer anchors to back-up and embed into masonry veneer at maximum 15 inches on center vertically and 16 inches on center horizontally, or as shown on structural drawings. Place additional anchors at perimeter of openings and ends of panels, so maximum spacing of anchors is 8 on center.

F. Seismic Reinforcement: Connect veneer anchors with continuous horizontal wire reinforcement before embedding anchors in mortar.

G. Comply with provisions of TMS 402/602, except where exceeded by requirements of Contract Documents.

3.06 MASONRY FLASHINGS

A. Whether or not specifically indicated, install two-piece masonry flashing to divert water to exterior at all locations where downward flow of water will be interrupted:

1. Extend flashings full width at such interruptions and at least 6 inches, minimum, into adjacent masonry or turn up at least 8 inches, minimum, to form watertight pan at non-masonry construction.

B. Extend metal flashings through exterior face of masonry and turn down to form drip.

C. Lap end joints of flashings at least 6 inches, minimum, and seal watertight with flashing sealant/adhesive.

3.07 CONTROL AND EXPANSION JOINTS

A. Do not continue horizontal joint reinforcement through control or expansion joints.

B. Install preformed control joint device in as long of lengths as possible. Seal butt and corner joints in accordance with manufacturer's instructions.

3.08 TOLERANCES

A. Maximum Variation From Unit to Adjacent Unit: 1/16 inch.

B. Maximum Variation from Plane of Wall: 1/4 inch in 10 ft and 1/2 inch in 20 ft or more.

C. Maximum Variation from Level Coursing: 1/8 inch in 3 ft and 1/4 inch in 10 ft; 1/2 inch in 30 ft.

3.09 CUTTING AND FITTING

A. Cut and fit for pipes and conduit. Coordinate with other sections of work to provide correct size, shape, and location.

B. Obtain approval from Resident Engineer prior to cutting or fitting masonry work not indicated or where appearance or strength of masonry work may be impaired.

3.10 CLEANING

A. Remove excess mortar and mortar smears as work progresses.

B. Replace defective mortar. Match adjacent work.

C. Clean soiled surfaces with cleaning solution.

3.11 SEALING

A. Seal cleaned and completed masonry within in the touch zone with anti-graffiti coating per Section 07 19 10 - Water and Graffiti Repellents. Continue sealer to next full course of masonry if touch zone demarcation occurs in the middle of a brick.

1. Where masonry walls are 12 feet high or less and where indicated on Issued for Construction Drawings, apply sealer and anti-graffiti coating full-height.

2. Confirm compatibility of sealer and brick with masonry supplier in writing prior to application.

3. Prior to proceeding with final work, apply mock-up and anti-graffiti test as described in Section 07 19 10 - Water and Graffiti Repellents .

4. Apply sealer within 24-72 hours after the brick surface has been cleaned, unless otherwise directed by masonry manufacturer.

3.12 PROTECTION OF FINISHED WORK

A. Without damaging completed work, provide protective boards at exposed external corners that are subject to damage by construction activities.

END OF SECTION

SECTION 04 22 00

CONCRETE UNIT MASONRY

PART 1 - GENERAL

1.01 SUMMARY

A. Section includes:

1. Section includes requirements for standard concrete unit masonry, mortar and grout, steel reinforcement and anchorage, accessories, and masonry installation.

1.02 REFERENCES

A. This Section incorporates by reference the latest revisions of the following documents as adopted by the authorities having jurisdiction (AHJ):

1. The Masonry Society (TMS):

a. TMS 402/602 Building Code Requirements and Specification for Masonry Structures.

2. ASTM International (ASTM):

a. ASTM C90 Standard Specification for Loadbearing Concrete Masonry Units.

b. ASTM C140 Standard Test Methods for Sampling and Testing Concrete Masonry Units and Related Units.

c. ASTM C144 Standard Specification for Aggregate for Masonry Mortar.

d. ASTM C150 Standard Specification for Portland Cement.

e. ASTM C207 Standard Specification for Hydrated Lime for Masonry Purposes.

f. ASTM C270 Standard Specification for Mortar for Unit Masonry.

g. ASTM C404 Standard Specification for Aggregates for Masonry Grout.

h. ASTM C476 Standard Specification for Grout for Masonry.

3. Underwriters Laboratories Inc. (UL):

a. UL Fire Resistance Directory (FRD).

1.03 SUBMITTALS

A. Submit:

1. Shop Drawings: Include individual CMU wall elevations including the following work:

a. Indicate reinforcement fabrication, bending, and placement. Include bar schedules, stirrup spacing schedules, bending and arrangement diagrams for reinforcement.

b. Indicate height of walls, including top and bottom of all raked walls. Include location, length and design of bondbeams.

c. Indicate location and provisions required for attachment of work included in other sections and the Issued for Construction Drawings. Work indicated must include all penetrations and openings for mechanical, electrical and systems equipment, ducts and conduit or piping including air spaces for moisture venting.

d. Indicate locations of openings and controls joints.

2. Concrete Masonry Unit Test Results: Test each variety of concrete unit masonry in accordance with ASTM C140 for conformance to requirements in Section 01 45 00 - Quality Assurance / Quality Control.

B. Transmit:

1. Product Data: Masonry units, fabricated wire reinforcement, mortar, and masonry accessories.

2. Manufacturers' Certificate: Certify that masonry units, grout and mortar mixes meet or exceed specified requirements. Include test results or International Code Council (ICC) Evaluation Reports for all specified items required to meet specific standards.

3. Samples: Four (4) samples of each type of masonry used to illustrate color, texture, and extremes of color range.

1.04 QUALITY ASSURANCE

A. Comply with provisions of the Quality Assurance Program in TMS 402 except where exceeded by requirements of the Issue for Construction Documents. Maintain copy of document on project site.

B. Fire-Rated Assemblies: Conform to UL FRD and any applicable local authority having jurisdiction for fire-resistive requirements for fire-rated masonry construction.

C. Mock-Up:

1. For each construction site, construct one masonry wall panel for each CMU type as mock-up panel of reinforced masonry sized 4 feet long by 4 feet high, or as needed to fully demonstrate, mortar and accessories, structural backup, reinforcing, wall openings, corners, flashings, attachment to structure, air spaces, and typical strike joints and patterns, including a typical control joint with proposed colored sealant.

2. Construct mock-up panel and obtain acceptance by Resident Engineer prior to construction of any masonry walls.

3. Locate where directed by Resident Engineer. CMU mockup panel must be standalone and not be part of permanent structure.

4. Accepted mock-ups to remain in place until all masonry work is complete. Remove mock-up at direction of the Resident Engineer.

D. Tolerances:

1. Erect masonry within the tolerances specified in TMS 602 Specification for Masonry Structures. Erect masonry within the tolerances specified in TMS 602 Specification for Masonry Structures.

1.05 DELIVERY, STORAGE, AND HANDLING

A. Deliver, handle, and store masonry units by means that prevents mechanical damage and contamination by other materials and in compliance with manufacturer's written instructions.

1.06 PROJECT CONDITIONS

A. Comply with adverse weather construction requirements contained in TMS 402/ 602 except where exceeded by requirements of the Issued for Construction Documents.

PART 2 - PRODUCTS

2.01 PERFORMANCE REQUIREMENTS

A. Concrete Masonry Walls as an exterior finish material as part of the building envelope:

1. No fewer than one layer of water-resistant barrier material attached to the studs or sheathing with flashing in such a manner as to provide a continuous water-resistive barrier behind the exterior wall veneer, complying with any of the following:

a. No. 15 felt complying with ASTM D266, Type 1.

b. ASTM E2556, Type I or II.

c. ASTM E331.

B. Other approved materials installed in accordance with the manufacturer's installation instructions.

C. Apply a space or drainage material not less than 3/16 inch in depth to the exterior of the water-resistive barrier and a means for draining water that enters the assembly to the exterior:

1. Drainage on the exterior side of the water-resistive barrier to have a minimum drainage efficiency of 90 percent as measured in accordance with ASTM E2273 or Annex A2 or ASTM E2925.

2.02 MATERIALS

A. Concrete Masonry Units (CMU):

1. Comply with referenced standards and as follows:

a. Sizes: Provide standard hollow core units with nominal face dimensions of 16 inches by 8 inches and nominal depth, unless noted otherwise on Issued for Construction Drawings.

b. Special Shapes: Provide non-standard blocks configured for corners, bond beams, lintels, headers, sloped caps, control joint edges (sash blocks), and other detailed conditions.

c. Load-Bearing Units (Typical): ASTM C90, Type 1, normal or medium weight with a minimum compressive strength as noted on Issued for Construction Drawings.

d. Acceptable CMU types are as follows:

1) CMU-1: Standard concrete masonry unit, smooth, natural gray.

2) CMU 2: Standard concrete masonry unit, smooth, color as shown on Issued for Construction Drawings.

3) CMU 3: Ground face finish, color as shown on Issued for Construction Drawings.

4) CMU 4: Split face finish, color as shown on Issued for Construction Drawings.

B. Mortar and Grout Materials:

1. Portland Cement: ASTM C150, Type I, II or III.

2. Hydrated Lime: ASTM C207, Type S.

3. Grout Aggregate: ASTM C404.

4. Mortar Aggregate: ASTM C144; washed aggregate consisting of natural sand or crushed stone.

5. Water: Clean and not detrimental to mortar mixture.

6. Provide Water Repellent Admixture: Liquid water repellent mortar admixture intended for use with CMU containing integral water repellent from same manufacturer.

7. Integral Water Repellent for units subject to exterior elements. Liquid polymeric, integral water repellent admixture that does not reduce flexural bond strength. Units made with integral water repellent, when tested according to ASTM E514/E514M as a wall assembly made with mortar containing integral water repellent manufacturer's mortar additive, with test period extended to 24 hours, and show no visible water or leaks on the back of test specimen.

C. Reinforcement and Anchorage:

1. Reinforcing Steel: Type and grade as specified in concrete reinforcing in the Issued for Construction Documents.

2. Flexible Anchors: 2-piece anchors that permit differential movement between masonry and building frame, sized to provide not more than 1 inch and not less than 1/2 inch of mortar coverage from masonry face (no exceptions).

D. Embedded Flashings:

1. Through-Wall Metal Flashing: Provide metal flashing complying with sheet metal flashing and trim as stated in the Issued for Construction Documents.

E. Flexible Flashing: For flashing not exposed to the exterior:

1. Rubberized-Asphalt Flashing: Composite flashing product consisting of a pliable, adhesive rubberized-asphalt compound, bonded to a high-density, cross- laminated polyethylene film to produce an overall thickness of not less than 0.030 inch.

a. Products:

1) Carlisle Coatings & Waterproofing; CCW-705-TWF Thru-Wall Flashing.

2) Dayton Superior Corporation, Dur-O-Wal Division; Dur-O-Barrier- 44.

3) Grace Construction Products, a unit of W. R. Grace & Co. - Conn.; Perm-A-Barrier Wall Flashing.

4) Heckmann Building Products Inc.; No. 82 Rubberized-Asphalt Thru-Wall Flashing.

5) Hohmann & Barnard, Inc.; Textroflash.

6) Polyguard Products, Inc.; Polyguard 300.

7) Polytite Manufacturing Corp.; Poly-Barrier Self-Adhering Wall Flashing.

2.03 ACCESSORIES

A. Preformed Control Joints: Rubber material. Provide with corner and tee accessories, fused joints:

1. Manufacturers:

a. Dur-O-Wal.

b. Hohmann & Barnard, Inc.; Product as detailed.

c. Masonry Reinforcing Corporation of America

B. Joint Filler: Closed cell polyvinyl chloride; oversized 50 percent to joint width; self- expanding; 6 inches wide by the maximum lengths available.

1. Manufacturers:

a. Dur-O-Wal; Product as detailed.

b. Hohmann & Barnard, Inc.; Product as detailed.

c. Masonry Reinforcing Corporation of America.

C. Weep/Vent Products: Use one of the following, unless otherwise indicated:

1. Cellular plastic weep/vent: one-piece, flexible extrusion made from UV-resistant polypropylene copolymer, full-height and width of head joint and depth 1/8 inch less than depth of outer wythe, in color selected from manufacturer’s standard.

2. Products:

a. Advanced Building Products Inc.; Mortar Maze weep vent.

b. Or approved equal.

D. Cavity Drainage Material: Use one of the following, unless otherwise indicated:

1. Free-draining mesh; made from polyethylene strands, full height and width of head joint and depth 1/8 inch less than depth of outer wythe; in color selected from manufacturer's standard.

2. Provide one of the following configurations:

a. Strips, not less than 1-½ inches thick and 10 inches high, with dimpled surface designed to catch mortar droppings and prevent weep holes from clogging with mortar.

b. Sheets or strips full depth of cavity and installed to full height of the cavity.

c. Provide at all through-wall flashings.

3. Products: Subject to compliance with requirements:

a. Mortar Net USA, Ltd.; Mortar Net Weep Vents.

b. or approved equal.

E. Mortar Barrier: Free-draining mesh, made from polymer strands that will not degrade within the wall cavity:

1. Provide strips full depth of cavity and 10 inches wide, with dovetail shaped notches 7 inches deep that prevent mesh from being clogged with mortar droppings.

2. Products:

a. Advanced Building Products Inc.; Mortar Break II.

b. Archovations, Inc.; CavClear Masonry Mat.

c. Dayton Superior Corporation, Dur-O-Wal Division; Polytite Mortar Stop.

d. Mortar Net USA, Ltd.; Mortar Net.

F. Cleaning Solution: Non-acidic, not harmful to masonry work or adjacent materials.

G. Masonry Ties and Anchors: ASTM E754 Standard Test Method for Pullout Resistance of Ties and Anchors Embedded in Masonry Mortar Joints.

2.04 MIXES

A. Mortar and Grout Mixes:

1. Mortar for Unit Masonry: ASTM C270 Standard Specification for Mortar for Unit Masonry. Use Type M or Type S for exterior, above grade, or load bearing condition. Refer to the Issued for Construction Documents for specific type and strength.

2. Grout: ASTM C476. Consistency required to fill completely volumes indicated for grouting; fine grout for spaces with smallest horizontal dimension of 2 inches or less; coarse grout for spaces with smallest horizontal dimension greater than 2 inches. Refer to the Issued for Construction Documents for additional requirements.

3. Mixing: Use mechanical batch mixer and comply with referenced standards.

PART 3 - EXECUTION

3.01 EXAMINATION

A. Verify that field conditions are acceptable and are ready to receive masonry.

B. Verify that related items provided under other sections are properly sized and located.

C. Verify that built-in items are in proper location, and ready for roughing into masonry work.

D. Do not proceed until unsatisfactory conditions have been corrected.

3.02 PREPARATION

A. Direct and coordinate placement of metal anchors supplied for installation under other Sections.

B. Place reinforcement and ties in grout spaces prior to grouting.

C. Provide temporary bracing during installation of masonry work. Maintain in place until building structure provides permanent bracing.

3.03 INSTALLATION

A. Comply with referenced standards.

B. Leave openings for equipment to be installed. Coordinate with other trades.

C. Age units at least 21 days before installation to reduce the chance of shrinkage cracks at the mortar-unit interface.

D. Coursing

1. Establish lines, levels, and coursing indicated. Protect from displacement.

2. Maintain masonry courses to uniform dimension. Form vertical and horizontal joints of uniform thickness.

3. Concrete Masonry Units:

a. Bond: Running

b. Coursing: One unit and one mortar joint to equal 8 inches.

c. Mortar Joints: Concave. Joints that will be concealed by other construction (such as furred gypsum board) are permitted to be struck flush.

E. Placing and Bonding:

1. Lay out walls in advance for accurate spacing of surface bond patterns with uniform joint widths and for accurate location of openings, joints, returns, and offsets. Avoid the use of less than half-size units at corners, jambs, and other locations.

2. Lay hollow masonry units with face shell bedding on head and bed joints.

3. Buttering corners of joints or excessive furrowing of mortar joints is not permitted. Remove excess mortar and mortar smears as work progresses.

4. Interlock intersections and external corners.

5. Do not shift or tap masonry units after mortar has achieved initial set. Where adjustment must be made, remove mortar and replace.

6. Perform job site cutting of masonry units with proper tools to provide straight, clean, unchipped edges. Prevent broken masonry unit corners or edges.

7. During erection, cover tops of walls, projections, and sills with waterproof sheeting at the end of each day's work. Cover partially completed masonry when construction is not in progress. Extend cover a minimum of 24 inches down both sides and hold securely in place.

8. Stain Prevention: Prevent grout, mortar, and soil from staining the face of masonry to be left exposed or painted. Remove immediately all grout, mortar, and soil that comes into contact with such masonry.

a. Protect base of walls from rain-splashed mud and mortar splatter by means of coverings spread on wall surface and on the ground.

b. Protect sills ledges, and projections from mortar droppings.

9. Stopping and Resuming work: In each course, rack back as required, clean exposed surfaces of set masonry, wet clay masonry units if required, and remove loose units prior to laying fresh masonry.

10. Isolate masonry partitions from vertical structural framing members with a control joint.

11. Isolate top joint of masonry partitions from horizontal structural framing members and floor slabs or decks with compressible joint filler or firestopping as required.

F. Reinforcement and Anchorage:

1. Fasten anchors to structural framing and embed in masonry joints as masonry is laid. Place reinforcement, wall ties and anchors in accordance with the sizes, types and locations indicated on the Issued for Construction Drawings, and as specified. Do not place dissimilar metals in contact with each other.

G. Flashing, Weep Holes, Cavity Drainage, And Vents:

1. Install embedded flashing and weep holes in masonry at shelf angles, lintels, ledges, other obstructions to downward flow of water in wall, and where indicated.

2. Install flashing as follows, unless otherwise indicated:

a. Prepare masonry surfaces so they are smooth and free from projections that could puncture flashing. Where flashing is within mortar joint, place through-wall flashing on sloping bed of mortar and cover with mortar. Before covering with mortar, seal penetrations in flashing with adhesive, sealant, or tape as specified by flashing manufacturer.

b. At lintels and shelf angles, extend flashing a minimum of 6 inches into masonry at each end. At heads and sills, extend flashing 6 inches at ends and turn up not less than 2 inches to form end dams. Install metal flashing termination beneath flexible flashing at exterior face of wall. Stop flexible flashing 1/2 inch back from outside face of wall and adhere flexible flashing to top of metal flashing termination.

c. Cut flexible flashing off flush with face of wall after masonry wall construction is completed.

3. Install weep holes in head joints in exterior wythes of first course of masonry immediately above embedded flashing and as follows:

a. Use specified weep/vent products to form weep holes.

b. Space weep holes 24 inches on center, unless otherwise indicated.

4. Place mortar barrier material in cavities to comply with configuration requirements for Mortar Barrier Material Article in Part 2

H. Lintels:

1. Provide reinforced concrete or reinforced concrete masonry lintels as detailed or scheduled on Issued for Construction Drawings.

2. All lintels to maintain minimum 8-inch bearing on each side of opening.

I. Grouted Components:

1. Splices: Lap 24 bar diameters minimum.

2. Support and secure reinforcing bars from displacement. Maintain position within 1/2 inch of dimensioned position.

3. Place and consolidate grout fill without displacing reinforcing.

4. Do not place grout until entire height of masonry to be grouted has attained sufficient strength to resist grout pressure.

J. Control Joints:

1. Form control joint using sash blocks on both sides of joint.

2. Provide control joints as indicated on drawings.

3. Install preformed control joint device in continuous lengths. Seal butt and corner joints in accordance with manufacturer's instructions.

4. Size control joint to match typical mortar joint width.

K. Built-In Work:

1. As work progresses, install built-in metal door frames and other items to be built into the work and furnished under other sections.

2. Install built-in items plumb, level, and true to line.

3. Bed anchors of metal door and glazed frames in adjacent mortar joints.

a. Fill adjacent masonry cores with grout minimum 12 inches from framed openings.

4. Do not build into masonry construction organic materials that are subject to deterioration.

3.04 ADJUSTING

A. Cutting and Fitting:

1. Cut and fit for chases, pipes, conduit, and structure. Coordinate with other sections of work to provide correct size, shape and location.

2. Obtain approval prior to cutting or fitting masonry work not indicated or where appearance or strength of masonry work is impaired.

3.05 CLEANING

A. Remove excess mortar and mortar droppings.

B. Replace defective mortar. Match adjacent work.

C. Clean soiled surfaces with cleaning solution.

D. Use non-metallic tools in cleaning operations.

3.06 PROTECTION

A. Without damaging completed work, provide protective boards at exposed external corners of completed work, which are subject to damage by construction activities.

END OF SECTION

SECTION 05 05 13

SHOP-APPLIED COATINGS FOR METAL

PART 1 - GENERAL

1.01 SUMMARY

A. Section includes:

1. Requirements for galvanizing where indicated for steel items, excluding fasteners indicated in 05 05 23 – Metal Fastenings.

1.02 REFERENCES

A. This Section incorporates by reference the latest revisions of the following documents:

1. American Galvanizers Association, Inc. (AGA).

a. Inspection of Hot-Dip Galvanized Steel Products.

2. American Society for Testing and Materials International (ASTM).

a. ASTM A123/A123M - Standard Specification for Zinc (Hot-Dip Galvanized) Coatings on Iron and Steel Products.

b. ASTM A143/A143M - Standard Practice for Safeguarding Against Embrittlement of Hot-Dip Galvanized Structural Steel Products and Procedure for Detecting Embrittlement.

c. ASTM A153/A153M - Zinc Coating (Hot-Dip) on Iron and Steel Hardware.

d. ASTM A384/A384M - Standard Practice for Safeguarding Against Warpage and Distortion During Hot-Dip Galvanizing of Steel Assemblies.

e. ASTM A385 Practice for Providing High-Quality Zinc Coatings (Hot-Dip).

f. ASTM A767 / A767M Specification for Zinc-Coated (Galvanized) Steel Bars for Concrete Reinforcement.

g. ASTM A780/A780M - Standard Practice for Repair of Damaged and Uncoated Areas of Hot-Dip Galvanized Coatings.

h. ASTM B6 - Standard Specification for Zinc.

i. ASTM B117 - Standard Practice for Operating Salt-Spray (Fog) Apparatus.

j. ASTM D6386 Practice for Preparation of Zinc (Hot-Dip Galvanized) Coated Iron and Steel Product and Hardware Surfaces for Painting.

k. ASTM E376 Practice for Measuring Coating Thickness by Magnetic-Field or Eddy-Current (Electromagnetic) Test Methods.

3. Society for Surface Protective Coatings (SSPC):

a. SP6 Commercial Blast Cleaning.

b. SP8 Pickling.

1.03 DEFINITIONS

A. Hot-dip galvanizing: Dipping steel members and assemblies into molten zinc, which results in zinc coating fusing permanently with base steel material for lasting, or long-term corrosion protection.

1.04 SUBMITTALS

A. Submit:

1. Coordination Drawings: To safeguard against distortion, furnish to the galvanizer steel fabricator's shop drawings of the following:

a. Non-standard fabrications.

b. Tubular fabrications.

c. Fabrications involving any dimension that exceed the size of the galvanizer's kettle.

d. Fabrications involving materials of different thicknesses.

2. Reports showing results of all inspections and tests.

3. Product Data: For each type of coating product specified.

B. Transmit:

1. Certification: Furnish certification for the following, signed by the galvanizer:

a. Membership in American Galvanizers Association Inc.

b. Materials used in galvanizing and repair.

c. Methods used in galvanizing and repair.

1.05 QUALITY ASSURANCE

A. Engage a galvanizing firm with a current membership in the American Galvanizers Association Inc. (AGA), specializing in hot-dip galvanizing after fabrication and following the procedures in the Quality Assurance Manual of the American Galvanizers Association.

B. Coordination Between Fabricator and Galvanizer: Prior to fabrication, fabricators shall submit approved fabrication shop drawings to the galvanizer. The Galvanizer shall review fabricator's shop drawings for suitability of materials for galvanizing and coatings and coordinate any required fabrication modifications.

C. Materials: For steel to be hot-dip galvanized, provide steel chemically suitable for metal coatings complying with the following requirements: carbon below 0.25 percent, phosphorous below 0.04 percent, manganese below 1.3 percent, and silicon below 0.04 percent. Notify the galvanizer if steel does not meet these requirements so that suitability for galvanizing may be determined and whether special processing techniques are required. Inspection and testing of hot-dip galvanized coatings shall be done under the guidelines provided in the AGA publication Inspection of Products Hot-dip Galvanized After Fabrication.

D. Inspect and test galvanized fabrications in accordance with ASTM A123/A123M for the following:

1. Visual examination of samples and finished products.

2. Thickness of coating.

3. Adhesion.

E. Mark all galvanized material with the galvanizer's stamp.

1.06 DELIVERY, STORAGE, AND HANDLING

A. Deliver, store, and handle galvanized fabrications in a manner that prevents damage to the item and its galvanizing.

PART 2 - PRODUCTS

2.01 MATERIALS

A. Steel Materials:

1. Material for galvanizing to be geometrically suitable for galvanizing as described in ASTM A384 and A385. Steel materials suitable for galvanizing include structural shapes, pipe, sheet, fabrications, and assemblies.

2. Material to be chemically suitable for galvanizing.

3. Recommended steel materials for hot-dip galvanizing include but are not limited to:

a. Structural shapes and plates: ASTM A36, A242 type 2, A283, A441, A 500, A501, A529, A572, A588 and A992.

b. Steel for sheet metal articles: ASTM A569 or A570.

c. Steel for pipe or tubing: ASTM A53, A120 or A595, Gr A or B.

B. Zinc for Galvanizing: ASTM B6

C. Galvanizing Repair Paint: A three-part system using an organic zinc-rich primer, an epoxy or urethane intermediate coat, and a urethane topcoat. If the final finish will be a high-performance coating confirm compatibility with HPC-3 coating in accordance with Section 09 96 00 - High-Performance Coatings:

1. Non-Structural, Non-Load-Bearing Items Not Exposed To Weather:

a. Zinc-Rich Paints:

1) Zinc-Dust Content: Dried film shall contain 93 percent minimum of zinc-dust by weight.

2) Acceptable Manufacturers:

a) Galvax by Alvin Products Inc, Everett, MA.

b) ZRC Galvilite by ZRC Worldwide, Marshfield, MA.

2. Structural, Load-Bearing Items and Items Exposed To Weather:

a. Zinc-Based Solders, Powder, Or Rod:

1) Zinc-Cadmium solder with liquidus temperature range from 518 to 527 deg F, or

2) Zinc-Tin-Lead alloy with liquidus temperature range from 446 to 500 deg F.

b. Sprayed Zinc: Wire, ribbon, or powdered zinc suitable for process.

2.02 FABRICATION REQUIREMENTS

A. Fabricate structural steel in accordance with Class I, II, III guidelines as described in AGA's Recommended Details for Galvanized Structures.

B. Fabrication practices for products to be in accordance with the applicable portions of ASTM A143, A384, and A385, except as specified herein. Avoid fabrication techniques that could cause steel distortion or embrittlement.

C. The fabricator shall consult with architect/engineer and hot-dip galvanizer regarding potential concerns, including handling issues, during the galvanizing process that may require design modification before fabrication proceeds.

D. Remove all welding slag, splatter, anti-splatter compounds and burrs prior to delivery for galvanizing.

E. Provide holes and/or lifting lugs to allow for handling during galvanizing.

F. Avoid unsuitable marking paints. Consult with the galvanizer about removal of grease, oil, paint and other deleterious material prior to fabrication.

G. Remove by blast-cleaning, or other methods, surface contaminants and coatings that are not removable by the normal chemical cleaning process in the galvanizing operation.

H. Whenever possible, slip joints should be used to minimize field welding of material.

PART 3 - EXECUTION

3.01 PREPARATION

A. Complete fabrications to the greatest extent possible prior to galvanizing.

B. Mask areas that are to be field welded or that are to be shop welded to ungalvanized members to a distance of one inch from the weld line prior to galvanizing.

C. Clean all surfaces in accordance with SSPC SP6, Commercial Blast Cleaning (1 to 2 mil anchor pattern), as minimum.

D. Pickle all surfaces in accordance with SSPC SP8, Pickling.

3.02 APPLICATION

A. Conform to paragraph 6.1 of ASTM A123/123M, Table 1 of ASTM A153/153M, or Table 2 of A767, as appropriate.

B. Hot-dip galvanize in accordance with ASTM A123/A123M. Mix the galvanizing bath to contain 0.05 to 0.09 percent nickel by weight. Apply galvanizing in the weights and thicknesses specified.

C. Safeguard against steel embrittlement in accordance with ASTM A143/A143M.

D. Safeguard against warpage or distortion in accordance with ASTM A384/A384M. Notify the Resident Engineer of potential warpage problems that require modification in design before proceeding with fabrications.

E. Surface Finish: Continuous, adherent, as smooth and evenly distributed as possible and free from any defect detrimental to the stated end use of the coated article.

F. Adhesion: Withstand normal handling consistent with the nature and thickness of the coating and normal use of the article.

G. If the galvanized steel shall be painted:

1. Do not treat with quenching or chromate conversion.

2. Prepare surface as described in ASTM D6386 Practice for Preparation of Zinc (Hot-Dip Galvanized) Coated Iron and Steel Product and Hardware Surfaces for Painting.

3.03 REPAIR OF DAMAGED COATING

A. The maximum area to be repaired is defined in accordance with ASTM A123/123M, Section 6.2, current edition.

1. The maximum area to be repaired in the field shall be determined in advance by mutual agreement between parties.

B. Repair areas damaged by welding, flame cutting or during handling, transport or erection by one of the approved methods in accordance with ASTM A780 whenever damage exceeds 3/16 inch in width. Minimum thickness requirements for the repair are those described in ASTM A123/123M, Section 6.2, current edition.

C. Grind rough areas to produce a uniform surface.

3.04 FIELD QUALITY CONTROL

A. Inspection and testing of hot-dip galvanized coatings shall be done under the guidelines provided in the AGA publication Inspection of Products Hot-dip Galvanized After Fabrication.

B. Include visual examination and tests in accordance with ASTM A123/123M, A153/153M, A767, or E376 as applicable, to determine the thickness of the zinc coating on the metal surface.

END OF SECTION

SECTION 05 05 23

METAL FASTENINGS

PART 1 - GENERAL

1.01 SUMMARY

A. Section includes:

1. Requirements for welding and bolting of structural steel and metal fabrications, and welding of sheet steel.

2. Requirements for welders, welding procedures, and inspections and tests of welding and bolting.

1.02 REFERENCES

A. This Section incorporates by reference the latest revisions of the following documents:

1. American Institute of Steel Construction (AISC):

a. AISC 303 Code of Standard Practice for Steel Buildings and Bridges.

2. American Society for Nondestructive Testing (ASNT).

3. Recommended Practice Number SNT-TC-1A Personnel Qualification and Certification in Nondestructive Testing.

4. ASTM International (ASTM):

a. ASTM A108 Standard Specification for Steel Bar, Carbon and Alloy, Cold-Finished.

b. ASTM A153/A153M Standard Specification for Zinc-Coating (Hot-Dip) on Iron and Steel Hardware.

c. ASTM A307 Standard Specification for Carbon Steel Bolts, Studs, and Threaded Rod 60,000 psi Tensile Strength.

d. ASTM F3125 / F3125M Standard Specification for High Strength Structural Bolts and Assemblies, Steel and Alloy Steel, Heat Treated, Inch Dimensions 120 ksi and 150 ksi Minimum Tensile Strength.

e. ASTM A563 Standard Specification for Carbon and Alloy Steel Nuts.

f. ASTM E94 / E94M Standard Guide for Radiographic Examination Using Industrial Radiographic Film.

g. ASTM E164 Standard Practice for Contact Ultrasonic Testing of Weldments.

h. ASTM E165 Standard Practice for Liquid Penetrant Testing for General Industry.

i. ASTM E709 Standard Guide for Magnetic Particle Testing.

j. ASTM E1032 Standard Practice for Radiographic Examination of Weldments Using Industrial X-Ray Film.

k. ASTM F436 / F436M Standard Specification for Hardened Steel Washers Inch and Metric Dimensions.

l. ASTM F844 Standard Specification for Washers, Steel, Plain (Flat), Unhardened for General Use.

m. ASTM F959 / F959M Standard Specification for Compressible-Washer- Type Direct Tension Indicators for Use with Structural Fasteners, Inch and Metric Series.

5. ASTM F3125 / F3125M Standard Specification for High Strength Structural Bolts and Assemblies, Steel and Alloy Steel, Heat Treated, Inch Dimensions 120 ksi and 150 ksi Minimum Tensile Strength, and Metric Dimensions 830 MPa and 1040 MPa Minimum Tensile Strength American Welding Society (AWS):

a. ANSI/AWS A2.4 Standard Symbols for Welding, Brazing, and Nondestructive Examination.

b. ANSI/AWS A3.0 Standard Welding Terms and Definitions.

c. ANSI/AWS B1.10 Guide for the Nondestructive Examination of Welds.

d. ANSI/AWS D1.1/D1.1M Structural Welding Code – Steel.

e. ANSI/AWS D1.3/D1.3M Structural Welding Code - Sheet Steel.

f. ANSI/AWS D1.5M/D1.5 Bridge Welding Code.

g. ANSI/AWS D1.6/D1.6M Structural Welding Code – Stainless Steel.

h. ANSI/AWS D1.8/D1.8M Structural Welding Code – Seismic Supplement.

i. AWS QC1 Specification for AWS Certification of Welding Inspectors.

6. Research Council on Structural Connections (RCSC):

a. Specification for Structural Joints Using ASTM A325 or A490 Bolts.

7. Washington Association of Building Officials (WABO):

a. WABO Welder and Welding Operator Performance Qualification Standard (No. 27-13).

8. Washington Department of Transportation (WSDOT):

a. WSDOT Standard Specifications for Road, Bridge and Municipal Construction.

B. Definitions:

1. Welds: Welding terms and definitions are per ANSI/AWS A3.0. Welding symbols are per ANSI/AWS A2.4.

2. Structural Steel: Elements of structural-steel frame, as classified by AISC 303, that support design loads.

3. Seismic Load Resisting System (SLRS): Assembly of Structural Steel elements that resist seismic loads. Members of SLRS are indicated in the Issued for Construction Drawings.

4. Seismic Demand-Critical Welds: Welds in the SLRS including:

   a. Complete penetration welds in beam-to-column connections, including welds to flanges, webs, and flange reinforcement, stiffener, and doubler plates.

   b. Complete penetration welds of column splices and of columns to base plates.

   c. Fillet welds connecting braced frame gusset plates to braces, beams, and columns.

   d. Other welds indicated as “Seismic Demand Critical” on the Issued for Construction Drawings.

5. Protected Zones: Area of a member in which limitations apply to fabrication and attachments. See Part 3 – EXECUTION of this Section.

6. Lowest Anticipated Service Temperature: 0 degrees Fahrenheit, as required by ANSI/AWS D1.8/D1.8M.

1.03 SUBMITTALS

A. Submit:

1. Shop Drawings: In compliance with AWS A2.4 and AWS A3.0.

   a. Welding Inspector Qualifications per Article 1.04 Quality Assurance.

   b. Personnel Performing Nondestructive Testing Qualifications per Article 1.04 Quality Assurance.

   c. Stud-Connector Manufacturer per Article 1.04 Quality Assurance.

B. Transmit:

1. Manufactured Products:

   a. Welding Electrode: Manufacturer’s certification of conformance.

   b. High-Strength Bolts, Nuts, and Washers: Manufacturer’s mill certificates demonstrating conformance.

   c. Mild Bolts, Nuts, and Washers: Manufacturer’s mill certificates demonstrating conformance.

   d. Direct Tension Indicating Washers: Manufacturer’s mill certificates demonstrating conformance, if proposed for use.

   e. Tension Control Structural Bolt-Nut-Washer Assemblies: Manufacturer’s mill certificates demonstrating conformance, if proposed for use.

2. Qualifications:

   a. AWS or WABO certified welders:

      1) Transmit certified copies of qualification test records for each welder, welding operator, and tack welder to be employed in the work.

Transmit welders' identification marks (ID) for each welder along with qualifications.

3. Welding Procedures:

a. Prior to commencement of welding, submit the procedure to be used for qualifying welding procedures.

b. For procedures other than those pre-qualified in accordance with AWS D1.1/D1.1M Structural Welding Code - Steel, submit a copy of procedure qualification test records in accordance with the qualification requirements of AWS D1.1/D1.1M, Section 4, Parts A and B.

4. Welding Records and Data: For field welding, transmit descriptive data for field welding test results and equipment used.

5. Mill Certificates: Retain mill certificates and certified copy of reports for all analyses and tests required by referenced AWS specifications.

6. Inspection and Test Reports: Forward inspection and test results to the Resident Engineer immediately after results are available. Results to state whether results are conforming or nonconforming.

a. Visual inspection reports.

b. Nondestructive test reports.

1.04 QUALITY ASSURANCE

A. Qualifications of Welders, Welding operators, and Tack welders: In accordance with AWS D1.1/D1.1M, Section 4, "Qualification", and ICC/WABO Certified.

B. Qualification of Welding Procedures: Prequalified or qualified in accordance with AWS D1.1/D1.1M, Section 4, "Qualification".

C. Qualifications of Welding Inspector: Contractor-employed AWS Certified Welding Inspector (CWI), certified in accordance with AWS QC1, and ICC/WABO Certified.

D. Qualification of Personnel Performing Nondestructive Testing (NDT):

1. American Society for Nondestructive Testing Certified (ASNT SNT-TC-1A).

2. Only persons certified for NDT Level I and working under an NDT Level II person or persons certified for NDT Level II are permitted perform nondestructive testing.

E. Weldability of Steel: For structural steel requiring impact test qualification, establish the weldability of the steel and the procedures for welding by qualification in accordance with AWS D1.1/D1.1M, Section 4, to match the notch toughness and weathering characteristics of the base metal.

F. Qualification of Stud-Connector Manufacturer: In accordance with ANSI/AWS D1.1/D1.1M, Annex IX, "Manufacturers' Stud Base Qualification Requirements. ICC/WABO structural steel building certified inspector for all high strength bolting.

1.05 DELIVERY, STORAGE, AND HANDLING

A. Deliver, store, and handle welding electrodes in conformance with ANSI/AWS D1.1/D1.1M.

B. Deliver, store, and handle bolts, nuts, and washers in conformance with RCSC Specification.

1.06 BRIDGE AND PEDESTRIAN BRIDGE STEEL FASTENINGS

A. For steel bridges, steel pedestrian bridges, and fastenings of all steel components, refer to WSDOT Standard Specifications in lieu of the requirements in this section.

PART 2 - PRODUCTS

2.01 EQUIPMENT

A. Welding Rod/Electrodes for structural plate, shapes and bars:

1. Conform to AWS A5 Series Standards.

2. Use coated rods or wire of size and classification number as specified by their manufacturers for the positions and other conditions of actual use. Match filler metal in conformance with AWS D1.1/D1.1M, Table 3.1 or 3.2 consistent with design requirements.

2.02 MATERIALS

A. Fasteners:

1. High Strength Bolts:

a. Bolt: ASTM F3125 / F3125M.

b. Nuts: ASTM A563 heavy-hex.

c. Washers: ASTM F436.

d. Finish: Hot-dipped zinc coating per ASTM A153/A153M. Bolting conforming to ASTM F3125 Grade A490 must not be galvanized.

2. Tension Control Structural Bolt-Nut-Washer Assemblies:

a. Bolts: ASTM F3125 Grade F1852, Type 1, heavy hex or dome head, splined ends.

b. Nuts: ASTM A563 heavy hex.

c. Washers: ASTM F436.

d. Finish: Hot-dip zinc coat in conformance with ASTM A153/A153M, Class

e. Bolting conforming to ASTM F3125 Grade A490 must not be galvanized.

3. Mild Bolts: Provide mild bolts, where noted A307:

a. Bolts: ASTM A307, Type A.

b. Nuts: ASTM A563A hex.

c. Washers: ASTM F844.

d. Finish: Hot-dipped zinc coat in conformance with ASTM A153/A153M, Class C.

4. Anchor Bolts: Section 03 15 25 - Anchorage to Concrete.

5. Welded Shear Connectors and Welded Headed Studs: ASTM A108, grades 1010 through 1020, headed stud type, cold finished carbon steel, AWS D1.1/D1.1M, Type B.

B. Welding Electrodes for Structural Shapes, Plates, and Bars:

1. Conform to ANSI/AWS A5 Series Standards, with a minimum tensile strength of 70 ksi. Provide coated rods or wire of size and classification number as specified by the manufacturer for the positions and other conditions of actual use. Match filler metal requirements in conformance with ANSI/AWS D1.1/D1.1M.

2.03 FABRICATION

A. Unless specifically noted as field-welded, welds are permitted to be shop or field welded at the Contractor's option. Perform shop welds in a WABO certified shop.

B. Welding of reinforcing steel for concrete: Conform to concrete reinforcing requirements as stated in the Issued for Construction Documents.

C. Shop Welding:

1. Perform shop welding as indicated in accordance with ANSI/AWS D1.1/D1.1M, AWS D1.5M/D1.5, ANSI/AWS D1.6/D1.6M, AWS D1.8/D1.8M, and ANSI/AWS D1.3/D1.3M, as applicable to the work.

2. Weld joints in conformance with approved AWS. Make ANSI/AWS D1.1/D1.1M available to welders and inspectors during fabrication.

3. Provide complete joint penetration welds for groove welds indicated on the Issued for Construction Drawings unless noted otherwise. Select groove preparation in conformance with ANSI/AWS D1.1/D1.1M.

4. Remove backing bars for complete joint penetration welds where indicated in the Issued for Construction Drawings or required for testing and inspection.

5. Mark welder ID adjacent to completed weld using metal stamp, metal engraving, keel, paint stick, or other appropriate marking material.

6. Weld stud shear connectors in conformance with stud manufacturer's printed instructions.

D. Anchorage to concrete: As stated in the Issued for Construction Documents.

E. Shop Bolting:

1. Drive bolts accurately into holes without damaging the thread. Protect bolt heads from damage during driving. Place washers and all bolt heads and nuts. Rest bolt heads and nuts squarely against the washers:

a. High-Strength Bolting Assemble joints in conformance with RCSC Specification.

b. Pretension bolts unless noted otherwise.

c. Pre-tensioned bolted connection qualification testing per RCSC must be performed.

d. Prepare faying surfaces for joints indicated as Slip-Critical in conformance with Class C for galvanized items, and in conformance with Class A for non-galvanized items.

e. Snug-tight connections are permitted in beam-to-beam connections only if specified on the plans or approved by an Engineer with the appropriate authority.

2.04 SHOP WELD QUALITY CONTROL

A. Shop Welding Procedures and Personnel: Verify the following prior to and during fabrication:

1. Welder qualifications and identifications.

2. Welding Procedures Specification (WPS) has been provided to and reviewed with each welder performing the Work.

3. Consumables meet WPS requirements.

4. Joint fit-up meets WPS requirements. Mark joint prior to welding.

5. Preheat and interpass temperatures and weld pass sequence meet WPS requirements.

B. Shop Welding Inspections and Testing:

1. Visual Inspection: ANSI/AWS D1.1/D1.1M. Visually inspect 100 percent of welds, for both permanent and temporary Work.

2. Ultrasonic Testing: ANSI/AWS D1.1/D1.1M, Chapter N of AISC 360-10 or the corresponding chapter in the latest edition, and ASTM E164, as applicable. Ultrasonically test complete joint penetration groove welds as follows:

a. 10 percent with material thickness equal to or less than 3/4 inch.

b. 50 percent with material thickness greater than 3/4 inch and equal to or less than 1-1/2 inches.

c. 100 percent for material thickness greater than 1-1/2 inches.

3. Magnetic Particle Inspection: ASTM E709, Chapter N of AISC 360-10 or the corresponding chapter in the latest edition. Inspect complete and partial joint penetration groove welds and fillet welds as follows:

a. 20 percent of complete joint penetration groove welds of tee and corner joints.

b. 10 percent of partial joint penetration groove welds and fillet welds.

4. Liquid Penetrant Inspection: ASTM E165/E165M. Liquid penetrant inspection may be used for detecting discontinuities that are open to the surface.

5. Radiographic Testing: ANSI/AWS D1.1/D1.1M, ASTM E94, and ASTM E1032, as applicable.

6. Nondestructive Testing:

a. In accordance with ANSI/AWS B1.10.

b. For Permanent and Temporary Work: in accordance with WSDOT Standard Specifications Section 6-03.3(25)A.

7. Quality of welds and standards of acceptance: In accordance with AWS D1.1/D1.1M, Sections 5, 6, and 7, as applicable.

8. Test Results: Submit test result information to the Resident Engineer immediately after test results are available, stating the acceptance or rejection of fabricated components, so that repairs and re-inspection or testing may be performed as soon as possible.

C. Shop Bolting Inspection and Testing:

1. Torque Wrench Calibration:

a. Calibrate torque wrenches in conformance with RCSC Specification.

b. Test the calibrating device for setting calibrated torque wrenches for accuracy using qualified personnel not more than 30 days prior to first use on the Work, and at intervals not more than six (6) months thereafter.

c. If the Resident Engineer finds the accuracy of the calibrating device inadequate, the Contractor must return it to the manufacturer for certification of accuracy.

D. Shop Inspections and Tests:

1. Independent verification inspection and testing at the shop must conform to requirements in Section 01 45 00 - Quality Assurance / Quality Control.

2. All welds and bolted connections are subject to inspections and testing for conformance to requirements in Section 01 45 00 - Quality Assurance / Quality Control.

PART 3 - EXECUTION

3.01 ERECTION

A. Field Bolting: Perform field bolting as specified for shop bolting.

B. Connections at Protected Zones:

1. Protected Zones are as indicated on the Issued for Construction Drawings.

2. Within protected zones, repair discontinuities created by fabrication or erection operations, such as tack welds, erection aids, air-arc gouging, and thermal cutting as required by the Issued-for-Construction Drawings and/or Resident Engineer.

3. Welded shear studs and decking attachments that penetrate the beam flange must not be placed on beam flanges within the Protected Zones. Decking arc spot welds as required to secure decking shall be permitted.

4. Welded, bolted, screwed or shot-in attachments for perimeter edge angles, exterior facades, partitions, duct work, piping or other construction must not be placed within the Protected Zone.

3.02 FIELD QUALITY CONTROL

A. All quality control measures in this specification must conform to requirements in Section 01 45 00 - Quality Assurance / Quality Control.

B. Field Welding Procedures and Personnel: Verify field welding procedures and personnel prior to and during field welding as specified for shop welding procedures and personnel.

C. Field Welding Inspection and Testing: Perform field welding inspection and testing as specified for shop welding inspection and testing.

D. Field Bolting Inspection and Testing: Perform field bolting inspection and testing as specified for shop bolting inspection and testing.

E. Verify all tests and inspections demonstrate conformance with the Issued for Construction Documents before loading structures, either temporary or permanent and submit results to the Resident Engineer.

END OF SECTION

SECTION 05 12 00

STRUCTURAL STEEL FRAMING

PART 1 - GENERAL

1.01 SUMMARY

A. Section includes:

1. Requirements for furnishing, fabricating, and erecting structural steel for building structures. Steel requirements for bridges are not included.

1.02 REFERENCES

A. This Section incorporates by reference the latest revisions of the following documents:

1. American Institute of Steel Construction (AISC):

a. AISC 303 Code of Standard Practice for Steel Buildings and Bridges.

b. AISC 341 Seismic Provisions for Structural Steel Buildings.

c. AISC 358 Prequalified Connections for Special and Intermediate Steel Moment Frames for Seismic Applications, including Supplement No. 1.

d. AISC 360 Specification for Structural Steel Buildings.

2. ASTM International (ASTM):

a. ASTM A6/A6M Standard Specification for General Requirements for Rolled Structural Steel Bars, Plates, Shapes, and Sheet Piling.

b. ASTM A36/A36M Standard Specification for Carbon Structural Steel.

c. ASTM A53/A53M Standard Specification for Pipe, Steel, Black and Hot-Dipped, Zinc-Coated, Welded and Seamless.

d. ASTM A108 Standard Specification for Steel Bar, Carbon and Alloy, Cold-Finished.

e. ASTM A252 Standard Specification for Welded and Seamless Steel Pipe Piles.

f. ASTM A307 Standard Specification for Carbon Steel Bolts, Studs, and Threaded Rod 60,000 psi Tensile Strength.

g. ASTM A435/A435M Standard Specification for Straight-Beam Ultrasonic Examination of Steel Plates.

h. ASTM A500/A500M Standard Specification for Cold-Formed Welded and Seamless Carbon Steel Structural Tubing in Rounds and Shapes.

i. ASTM A529/A529M Standard Specification for High-Strength Carbon-Manganese Steel of Structural Quality.

j. ASTM A563 Standard Specification for Carbon and Alloy Steel Nuts.

k. ASTM A572/A572M Standard Specification for High-Strength Low-Alloy Columbium-Vanadium Structural Steel.

l. ASTM A588 Standard Specification for High-Strength Low-Alloy Structural Steel, up to 50 ksi Minimum Yield Point, with Atmospheric Corrosion Resistance.

m. ASTM A992/A922M Standard Specification for Structural Steel Shapes.

n. ASTM F436 / F436M Standard Specification for Hardened Steel Washers Inch and Metric Dimensions.

o. ASTM F959 / F959M Standard Specification for Compressible-Washer-Type Direct Tension Indicators for Use with Structural Fasteners, Inch and Metric Series.

p. ASTM F1554 Standard Specification for Anchor Bolts, Steel, 36, 55, and 105-ksi Yield Strength.

q. ASTM F3125 / F3125M Standard Specification for High Strength Structural Bolts, Steel and Alloy Steel, Heat Treated, Inch Dimensions 120 ksi and 150 ksi Minimum Tensile Strength, and Metric Dimensions 830 MPa and 1040 MPa Minimum Tensile Strength.

3. American Welding Society (AWS):

a. ANSI/AWS A2.4 Standard Symbols for Welding, Brazing, and Nondestructive Examination.

b. ANSI/AWS D1.1/D1.1M Structural Welding Code – Steel.

c. AWS D1.8 Structural Welding Code – Seismic Supplement.

4. Research Council on Structural Connections (RCSC):

a. Specification for Structural Joints Using High-Strength Bolts.

5. The Society for Protective Coatings (SSPC):

a. SSPC SP 6 Commercial Blast Cleaning.

6. Washington Department of Transportation (WSDOT):

a. WSDOT Standard Specifications for Road, Bridge and Municipal Construction.

7. American Petroleum Institute (API):

a. API Specification 5L.

B. Definitions:

1. Structural Steel: Elements of structural-steel frame, as classified by AISC 303, that support design loads.

2. Seismic Load Resisting System (SLRS): Assembly of Structural Steel elements that resists seismic loads. Members of SLRS are indicated in the Issued for Construction Drawings.

3. Demand-Critical Welds: Welds in the SLRS including:

a. Complete penetration welds in beam-to-column connections, including welds to flanges, webs, and flange reinforcement, stiffener, and doubler plates.

b. Complete penetration welds of column splices and of columns to base plates.

c. Fillet welds connecting braced frame gusset plates to braces, beams, and columns.

d. Other welds indicated as “Seismic Demand Critical” on the Issued for Construction Drawings.

4. Protected Zone: See Issued for Construction Drawings for members or parts of members defined as Protected Zones, and surface of braced frame diagonal member, its gusset plates and cover plates in which restrictions apply to fabrication and attachments. Protected zones are noted on the Issued for Construction Drawings.

1.03 SUBMITTALS

A. Submit:

1. Shop Drawings:

a. Submit detailed shop drawings of structural steel work, including erection plans and piece drawings, showing member sizes, details of fabrication and construction, methods of assembly, field welding, spacing and locations of members, hardware, anchors, openings, weep holes and locations, and accessories, and erection sequence and details. Include procedures for heavy lifts and rigging.

b. Welding Procedures: Submit welding procedures and overall fabrication methods in conformance with AWS D1.1/D1.1M and AWS D1.8.

c. Include in shop drawings member identity, welding technique, cuts, copes, gussets, connections, holes, fasteners, camber, fabrication and erection tolerances, type of finish, paint system, weights of members, and critical clearances. Indicate locations of Protected Zones.

d. Indicate welds, both shop and field, using standard welding symbols of ANSI/AWS A2.4. Show the size, length, and type of each weld on drawings. Identify welds to the SLRS and Demand Critical Welds.

e. Indicate type, size, and length of bolts, distinguishing between shop and field bolts. Identify pretensioned and slip-critical high-strength bolted connections.

f. Verify all dimensions and coordinate with adjoining work.

g. Indicate individual welders' identification (ID) on record documents.

h. All shop drawings must be reviewed by and coordinated for handholes with the corresponding subcontractors.

2. Template Drawings and Placement Plans: As required for satisfactory placing of connections and anchorages.

3. Working Drawings and Method Statements:

   a. Investigate stresses caused by the proposed erection procedure.

   b. Submit the construction sequence for erection and disassembly of the shoring system. Indicate how sequence is coordinated with interim grading and drainage and the construction of the permanent structure.

   c. Submit drawings sealed by a Professional Engineer registered in the State of Washington. Show details of required temporary supports, staying, and bracing. Include descriptive data to illustrate the erection, transportation, and handling procedures, including sequence of erecting and transfer of loads if applicable.

   d. Submit calculations sealed by a Professional Engineer registered in the State of Washington supporting the drawings and other descriptive data.

   e. Furnish setting diagrams, templates, and directions for the erection of structural framing, anchor bolts, bearing plates, and other embedded items.

4. Shop testing report as required in Article 1.05 Quality Assurance, in this specification.

5. Welding Records and Data: Refer to Section 05 05 23 Metal Fastenings for the requirements as stated in the Issued for Construction Documents.

B. Transmit:

1. Product Data:

   a. Manufacturer's product data for load-indicator washers (Compressible washer-type direction tension indicators), bolts and accessories.

   b. Data on coating system. Steel shop primer and intermediate and finish high performance coatings must be compatible between each other.

2. Certificates:

   a. At completion of fabrication, the approved fabricator must transmit a Certificate of Compliance and copy to the Building Official stating that the work was performed in accordance with the approved construction documents.

3. Mill test reports of structural steel materials, showing:

   a. Name, address and phone number of the steel manufacturer.

   b. Statement identifying the type of steel referenced on the mill certification (for example: carbon plate, ASTM A36/A36M/ASME SA36).

   c. Statement that the steel was melted and rolled in the USA.

   d. Number of pieces represented by the mill certification (for example: 6 pieces, 12 feet by 12 feet by 6 inches).

   e. Physical properties including Heat Number, Yield Strength, Tensile Strength, Percentage of Elongation, Hardness (if applicable) and Bend Tests (if applicable).

f. Chemical Analysis as applicable for each type of steel and each heat number referenced on the mill certification including Carbon, Manganese, Phosphorus, Sulfur, Silicon, Copper, Nickel, Vanadium, Columbium, Aluminum, Chromium, Molybdenum, and Cerium.

g. Signature of the person that prepared the mill certificate.

4. Qualifications:

a. Fabricator: AISC certification and current work history.

b. Erector: AISC certification and current work history.

c. Professional Engineer: License number and current work history.

5. Calibration Records:

a. Provide copies of torque wrench calibration records.

1.04 QUALITY ASSURANCE

A. Fabricator:

1. Currently certified under the AISC Certification Program, Category BU.

2. Minimum of five (5) years of experience with successfully completed structural steel work of similar complexity.

B. Erector:

1. Minimum of five (5) years of experience with successfully completed structural steel work of similar complexity.

C. Professional Engineer: Licensed professional engineer currently registered in the State of Washington.

D. Certifications of Welders: Refer to Section 05 05 23 - Metal Fastenings for the requirements.

E. Shop Testing by Contractor: Perform ultrasonic testing and visual inspection of all plate material and rolled sections greater than 1-1/2 inches in thickness and located at welded connections for discontinuities prior to fabrication. The test area is defined as a zone up to 6 inches away from the weld in the connection. These tests are in addition to the ultrasonic testing of all full-penetration welds to be performed by the Owner's Testing Agency. Submit the testing report to the Resident Engineer. All costs associated with this testing are borne by the Contractor:

1. Ultrasonic Testing: Conduct in accordance with ASTM A435 with the following modifications and supplementary requirements:

a. Supplementary Requirements S1, including 100 percent scanning of the test.

F. Certifications of Welding Procedures: Refer to Section 05 05 23 - Metal Fastenings for the requirements.

G. Pre-Construction Conference: Schedule a job conference to review the Structural Documents prior to development of shop drawings. The conference must be attended by all pertinent parties, which is, at a minimum, to include the Fabricator, Erector, Contractor, Owner's Testing Agency, and Structural Engineer.

1.05 DELIVERY STORAGE AND HANDLING

A. Load, transport, unload, and store structural steel materials in such a manner that the metal is kept clean and free from injury. Store materials above ground on platforms, skids, or other supports, and cover and protect from corrosion.

B. Mark weight and piece (mark) number, corresponding to shop erection sequence drawing, on all members. Match-mark all shop pre-fitted members.

C. Ship small parts, such as bolts, nuts, washers, pins, fillers, clips, and small connecting plates and anchors, in boxes, crates, or barrels, plainly mark with an itemized description of the contents on the outside of each container.

D. Pack separately each length and diameter of bolt and each size of nut and washer.

E. Avoid bending, scraping, and overstressing the steelwork. Block with wood, or otherwise protect, projecting parts that may be bent or damaged.

PART 2 - PRODUCTS

2.01 MATERIALS

A. Wide Flange Shapes:

1. ASTM A992/A992M Gr. 50.

2. AASHTO M270 Gr. 50.

B. HP Shapes: ASTM A572 Gr. 50.

C. Channels and MC shapes: ASTM A36/A36M.

D. Angles: ASTM A36/A36M.

E. Plate:

1. ASTM A36/A36M.

2. ASTM A572/A572M, Grade 50.

3. ASTM A529/A529M, Grade 50.

4. AASHTO M270 Gr. 50.

F. Hollow Structural Sections:

1. Rectangular: ASTM A500 / A500M, Grade C.

2. Round, diameter equal to or less than 20 inches: ASTM A500 / A500M, Grade C or B.

G. Pipe, diameter equal to or less than 12 inches: ASTM A53 / A53M, Grade B, Fy = 35 ksi.

H. HP shapes: ASTM A572 Gr. 50.

I. S shapes: ASTM A36.

2.02 PRODUCTS

A. Bolts: Refer to Section 05 05 23 - Metal Fastenings as stated in the Issued for Construction Documents.

B. Welding Electrodes: Conform to Section 05 05 23 Metal Fastenings as stated in the Issued for Construction Documents.

C. Unheaded anchor rods: ASTM F1554, Grade 55 unless otherwise noted on structural drawings. Finish: Plain

D. Headed anchor rods: ASTM F1554, Grade 55 unless otherwise noted on structural drawings. Finish: Plain

E. Threaded Rods: ASTM A36/A36M or ASTM F1554, Grade 55, as noted on structural drawings.

F. Shear connectors: ASTM A108, Grades 1015 through 1020, headed stud type, cold-finished carbon steel; AWS D1.1/D1.1M, Type B.

G. Fasteners: Conform to Section 05 05 23 - Metal Fastenings as stated in the Issued for Construction Documents.

H. Base Plate Shims:

1. Grouted Base Plates; Provide MB SUPER SHIMS manufactured by Meadow Burke, stainless steel shims, or approved equal.

2. Non-Grouted Base Plates; Stainless steel shims.

2.02 FABRICATION

A. Protected Zones: Do not connect to members and parts of members defined as Protected Zones in the Drawings in the protected zones and do not modify or damage as indicated below. Protected Zones occur at braced frames and members or parts of members as indicated on the Issued for Construction Drawings. Within the protected zones, the fabrication and erection must prevent the following:

1. Do not create discontinuities by fabrication or erection operations, such as tack welds, erection aids, air-arc gouging, and thermal cutting.

2. Do not place welded shear studs and decking attachments that penetrate the beam flange on beam flanges within the protected zone. Decking arc spot welds as required to secure decking are permitted.

3. Do not place welded, bolted, screwed or shot-in attachments for perimeter edge angles, exterior facades, partitions, duct work, piping or other construction within the protected zones.

B. Conform to the applicable requirements of AISC 360, AISC 341 and AISC 303.

C. Conform to Section 05 05 23 - Metal Fastenings stated in the Issued for Construction Documents.

D. Fabricate elements of the SLRS in accordance with AISC 341 and AISC 358, including supplement 1, for special and intermediate steel moment frames.

E. Prefabricate and preassemble steel members and metal fabrications in the factory or shop as far as practicable. Mark and match-mark materials for field assembly.

F. Form and fabricate the work to meet installation conditions. Include accessories to adequately secure the work in place. Be responsible for errors of fabrication and for correct fitting of structural members.

G. Center all electrical, system and mechanical handholes on the centerline of the member webs. Round all corners for handholes (radius of 2 times the web thickness).

H. Seal joined members exposed to weather by continuous welds. Grind exposed welds smooth.

I. Straighten rolled material, if necessary, before laying it out for fabrication, in a manner conforming to the mill tolerances specified in ASTM A6/A6M, and by a process and in a manner which does injure the material. Sharp kinks and bends are cause for material rejection. Do not use heat shrunk low-alloy structural steel.

J. Perform shearing, flame cutting, and chipping carefully and accurately so as not to induce residual stress in the metal being cut. Hold the radii of re-entrant gas-cut fillets not less than ¾-inch and as much larger as practicable. For cut edges exposed in the finished work, machine cut, shear, or flame cut, and grind flush in conformance with AISC 360. Maintain all working points.

K. Maintain all working points.

L. Fabricate joints which will be exposed to weather in a manner to exclude water or provide weep holes where water accumulates. Provide 1/4-inch diameter weep holes (flame cut holes are prohibited) at the low points of all vertical and diagonal HSS, pipe and tube members; at the bottoms of all horizontal HSS, pipe and tube members (minimum 2 per members).

M. Fabricate bearing stiffeners and stiffeners intended as supports for concentrated loads as indicated. Mill or grind bearing surfaces of these stiffeners.

N. Bend load-carrying cold-rolled steel plates cold at right angles to the direction of rolling. Bend such that the radius of bend, measured to the concave face of the metal, is not less than indicated in the following table, in which T is the thickness of the plate.

ANGLE THROUGH WHICH PLATE IS BENT	MINIMUM RADIUS
61 to 120 degrees	1.0 T
121 to 150 degrees	2.0 T

1. If a shorter radius is indicated, bend the plate hot. Before bending, round plate edges where bending occurs to a radius of 1/16-inch.

O. Bolt or weld connections as indicated on the Issued for Construction Drawings.

P. At Station Entrances, Systems Raceways, Interior Soffit Framing and any Structural Steel Framing within 20 feet of public walking surfaces, do not use screws or bolts wherever welding can be performed at connections. When using bolts connections if unavoidable, countersink heads and draw up tight; nick threads to prevent loosening.

Q. At Station Entrances, Systems Raceways, Interior Soffit Framing and any Structural Steel Framing within 20 feet of public walking surfaces, minimize Weld Show-Through where exposed to view through use of intermittent welds, selection of weld type (i.e., gas shield instead of arc), and heat dissipation techniques employed in the fabrication and assembly process.

R. Visible welds at Station Entrances, Systems Raceways, Interior Soffit Framing and any Structural Steel Framing within 20 feet of public walking surfaces: Grind flush and smooth all welds that are exposed to view at Station Entrances and meet the requirements in AWS D1.1/D1.1M, also do not project all groove and plug welds that are exposed to view more

than 1/16-inch above the exposed surface and remove weld spatter at all surfaces exposed to view. In addition:

1. Make exposed joint butt tight, flush, and hairline. Ease exposed sheared edges to a radius of approximately 1/32-inch, unless otherwise indicated.

2. Form bent metal corners to smallest radius possible without causing grain separation or otherwise impairing work.

3. Seal continuous welds to close any open gaps.

4. Close all weld access holes at full penetration welds.

5. Unless otherwise indicated on the Issued for Construction drawings, weld all shop connections.

6. Grind smooth tack welds, and fill holes with weld metal and smoothed by grinding or filing.

S. Drill or punch holes at right angles to the surface of the metal. Do not flame cut holes or enlarge holes by burning. Drill holes in base or bearing plates. Provide holes in members to permit connecting the work of other trades. Punch or drill holes at 1/16-inch larger than the diameter of the bolt.

T. For high-strength bolting, assemble joints in conformance with RCSC Specification for Structural Joints and install bolts in accordance with AISC Specification for Structural Joints Using F3125/F3125M Bolts and ASTM A563 heavy hex nuts. Use hardened-face washers in conformance with ASTM F436 for all connections using F3125/F3125M bolts. Assemble joints using load-indicator washers in conformance with ASTM F959.

U. For items bearing on concrete, provide steel bearing plates and anchors. Level base or bearing plates by means of adjustment nuts and washers or permanent shims that are promptly grouted after the structural steel has been plumbed. Furnish templates, together with instructions for setting of anchors, anchor bolts, and bearing plates. Set anchors and related items properly in concrete during the progress of the work.

V. Fabricate metal bearing surfaces that contact preformed elastomeric bearing pads or grout flat to within 1/8-inch tolerance in 12 inches and to within 3/16-inch overall.

W. Include reinforcing angles, clip angles, plates, punched straps, brackets, and hangers as required to complete the work as indicated.

X. Provide drainage holes in structural components to prevent water accumulation.

Y. Where finishing is required, complete the assembly, including welding of units, before start of finishing operations. Finish surfaces of members exposed in the final structure must be free of markings, burrs, and other defects.

Z. Repair discontinuities within Protected Zones caused by fabrication operations such as tack welds, erection aids, air-arc gouging, and thermal cutting in conformance with AWS D1.8.

AA. Do not leave erection marks or other painted marks on those surfaces of weathering steel members that are to be exposed in the completed structure. Unless otherwise specified in the Issued for Construction Documents, clean weathering steel members to meet the requirements of SSPC SP 6.

BB. At Station Entrances, Systems Raceways, Station Canopies, Egress Stairs, and Interior Soffit Framing and any Structural Steel Framing within 16 feet of public walking surfaces, fill, ground or remove stamped or raised manufacturer’s identification marks.

CC. Seams of hollow structural sections is permitted as produced. Orient seams away from view or as directed in the Issued for Construction Documents.

DD. Welded Headed Stud Shear Connectors: Prepare steel surfaces as specified by manufacturer of shear connectors. Use automatic end welding of heads stud shear connectors according to AWS D1.1/D1.1M and manufacturer's written instructions.

2.03 FINISHES

A. Refer to 'Issued for Construction Documents' for finish types and Section 05 05 23 - Metal Fastenings and 09 96 00- High Performance Coatings for requirements.

2.04 WELDING

A. Shop Welding and Shop Welding Repairs: Refer to Section 05 05 23 - Metal Fastenings for welding requirements.

2.05 BOLTING

A. Shop Bolting: Refer to Section 05 05 23 - Metal Fastenings for shop bolting requirements.

2.06 SOURCE QUALITY CONTROL

A. Fabricator's Facility

1. Select a Fabricator certified by AISC.

2. Provide the Resident Engineer access to inspect the AISC-Certified Fabricator's shop or facility before the start of fabrication work. Notify the Resident Engineer in writing at least 10 days before the scheduled start of fabrication work.

B. Calibration of Torque Wrenches:

1. Check the calibrating device for setting calibrated torque wrenches for accuracy using qualified personnel not more than 30 days prior to its first use on the work, and at intervals not more than 6 months thereafter.

2. Provide copies of calibration records to the Resident Engineer. Calibrate torque wrenches as specified in the RCSC Specification for Structural Joints using F3125/F3125M Bolts.

C. Issue Non-Conformance Report (NCR) for deficiencies in work that test reports and inspections indicate non-conformance with the Issued for Construction Documents.

D. In addition to visual inspection, test and inspect shop-welded shear connectors to requirements in AWS D1.1/D1.1M for stud welding.

PART 3 - EXECUTION

3.01 ERECTION AND INSTALLATION

A. Protected Zones: Follow the same requirements as in Article 2.02.A of this Specification Section.

B. Reference Standards: Erect and install structural steel in conformance with the applicable requirements of AISC 360 and AISC 341. Hold a readiness review meeting with the parties involved with the steel erection including the Resident Engineer after shop drawings and erection plans are approved.

C. Special Care: Avoid marking or distorting the structural steel in unloading, handling, and erecting the structural steel materials. Avoid the damage to any shop paint. If using temporary braces or erection clips, avoid the creation of unsightly surfaces upon removal. Plan and execute all operations in such a manner to insure that the close fit and neat appearance of the structure.

D. Prior to erection, verify elevations of concrete and masonry bearing surfaces and locations of anchor rods, bearing plates, and other embedments, with steel erector present, for compliance with requirements. Proceed with installation only after correcting unsatisfactory conditions.

E. Lines and Levels: Install structural steel accurately at established lines and levels. Install steel plumb and level before commencing bolting. Install in accordance with accepted shop drawings and actual conditions, true and horizontal or perpendicular, level and square, with angles and edges parallel with related lines of the structure.

F. Temporary Bracing: Provide temporary bracing as required and keep in position until final completion. Brace and carefully handle shop fabricated items subject to damage to prevent distortions or other damage. Properly brace all items installed before placing concrete to prevent distortion by pressure of concrete. Watch and maintain bracing during concreting operations.

G. Bases and Bearing Plates to be Grouted:

1. Clean concrete and masonry bearing surfaces of bond-reducing materials and roughen surfaces prior to setting base and bearing plates. Clean bottom surfaces of base and bearing plates. Promptly pack grout solidly between bearing surfaces and base or bearing plates so no voids remain.

2. Set base and bearing plates accurately using a high-strength, non-shrink grouting mortar in accordance with non-shrink grouting, installation, as stated in the Issued for Construction Documents.

3. Support bases and plates that require grouting at the correct level by means of adjustment nuts and washers on anchor bolts or permanent shims that are promptly grouted after the structural steel has been plumbed.

H. Dissimilar Metals: Do not place dissimilar metals in contact with each other. Add nonmetallic spacers or other approved material between dissimilar metals, even if the metal is coated.

I. Erection and Assembly: After erection and field assembly, align the various members forming parts of the completed structure and adjust accurately before fastening. Conform to the applicable tolerance requirements of AISC 303.

J. Erect elevator hoistway structural steel support framing connection to the concrete platform structure with a sufficient time after placing and compacting station fill. Consult the project geotechnical engineer for the required time for consolidation.

K. Splice members only where indicated. Fasten splices of compression members after bringing abutting surfaces completely into contact.

L. Do not use thermal cutting during erection unless approved by the Resident Engineer. Finish thermally cut sections within smoothness limits in AWS D1.1/D1.1M. Cutting will be permitted only on secondary members, which are not under stress, as acceptable to the Resident Engineer.

M. Drift Pins: Drift pins are permitted only to bring together several parts or components. Do not use fit-up bolts and drift pins to bring out-of-tolerance fabricated members and

components into alignment. Do not use drift pins with such force as to distort or damage the material.

N. Erection Connections:

1. Place holes, plates, or other attachments required by the erector so as not to interfere with or cause any other detrimental effect to structural members or connections.

2. Remove erection bolts and attachments not shown on the Issued for Construction Drawings.

3. Fill holes not shown on the Issued for Construction Drawings with plug welds and grind smooth at exposed surfaces.

O. Welded Headed Stud Shear Connectors: Prepare steel surfaces as specified by manufacturer of shear connectors. Use automatic end welding of heads stud shear connectors according to AWS D1.1/D1.1M and manufacturer's written instructions.

3.02 WELDING

A. Field Welding and Field Welding Repairs: Refer to Section 05 05 23 - Metal Fastenings for welding requirements and as stated in the Issued for Construction Contract Documents.

3.03 BOLTING

A. Field Bolting: Refer to Section 05 05 23 - Metal Fastenings for bolting requirements and as stated in the Issued for Construction Documents.

B. High-Strength Bolting: Assemble joints in accordance with AISC Specifications for Structural Joints Using ASTM F3125/F3125M Bolts.

3.04 FIELD QUALITY CONTROL

A. Field Welding Procedures and Personnel: Refer to Section 05 05 23 - Metal Fastenings and the requirements as stated in the Issued for Construction Documents.

B. Plumb, level, and align individual pieces in accordance with the requirements of AISC 303 "Code of Standard Practice for Steel Buildings and Bridges."

C. Field Survey: Make an accurate survey of alignments and elevations of all steel members as noted on the Issued for Construction drawings.

1. During construction of the steel frame, survey the column locations and splice elevations as each column tier is erected. Submit survey reports indicating this information within 24 hours after the survey for review prior to erecting the subsequent tiers.

2. Establish permanent benchmarks by a registered Professional Surveyor employed by the Contractor in accordance with the requirements of Issued for Construction Documents.

3. Where locations vary beyond the allowable tolerances, notify the Resident Engineer and take necessary corrective measures and modify details and/or procedures as required and approved.

D. Field Bolting Testing and Inspection: Refer to Section 05 05 23 - Metal Fastenings as stated in the Issued for Construction Documents.

E. Inspect field-assembled and installed high-strength bolting upon direction of the Resident Engineer. The independent laboratory must torque-test bolts in accordance with RCSC Specification for Structural Joints using F3125/F3125M Bolts.

F. Perform visual inspection and non-destructive testing (NDT) of welds in accordance with WSDOT Standard Specifications Section 6-03.3(25). For occupied structures governed by the International Building Code, inspections must conform to the International Building Code, with the exception that pedestrian structures (bridges or walkways) weld inspection must follow WSDOT Standard Specifications Section 6-03.3(25).

G. Correct deficiencies in work that test reports and inspections indicate non-conformance with Issued for Construction Documents.

3.05 PROTECTION

A. Use fire-retardant blankets to completely contain arcs and spatter associated with welding.

B. Protected Zones:

1. Refer to elsewhere in this Specification Section.

END OF SECTION

SECTION 05 30 00

METAL DECKING

PART 1 - GENERAL

1.01 SUMMARY

A. Section includes:

1. Requirements for furnishing and installing metal roof deck, composite metal floor deck, and accessories as indicated.

1.02 REFERENCES

A. This Section incorporates by reference the latest revisions of the following documents:

1. ASTM International (ASTM):

a. ASTM A653/A653M Standard Specification for Steel Sheet, Zinc-Coated (Galvanized) or Zinc-Iron Alloy-Coated (Galvannealed) by the Hot-Dip Process.

b. ASTM A780/A780M Standard Practice for Repair of Damaged and Uncoated Areas of Hot-Dip Galvanized Coatings.

c. ASTM A924 Standard Specification for General Requirements for Steel Sheet, Metallic-Coated by the Hot-Dip Process.

2. American Welding Society (AWS):

a. AWS D1.3 Structural Welding Code – Sheet Steel.

3. Steel Deck Institute (SDI):

a. SDI Publication No. 31 Design Manual for Composite Decks, Form Decks, and Roof Decks.

4. American Iron and Steel Institute (AISI):

a. AISI S100 North American Specification for the Design of Cold-Formed Steel Structural Members.

1.03 SUBMITTALS

A. Submit:

1. Shop Drawings:

a. Dimensioned deck layout noting deck type, profile, and gage.

b. Locations of and details for deck supports, laps, edges, and openings.

c. Locations of and details for deck attachments.

d. Locations of and details for deck accessories.

B. Transmit:

1. Manufacturer’s Product Data:

a. Metal Deck:

1) Profiles, properties, load and shear capacities of each type, profile, and gage used.

2) Accessories

3) Manufacturer's written instructions for storage, handling, and application.

b. Galvanizing Repair Compound:

1) Manufacturer's written instructions for storage, handling, and application.

2. Field Quality Control test and inspection reports.

3. Research/Evaluation Reports: ICC-ES or IAPMO-ES reports.

4. Qualifications of Welders as required in Section 05 05 23 - Metal Fastenings.

5. Welding Procedures as required in Section 05 05 23 - Metal Fastenings.

1.04 QUALITY ASSURANCE

A. Qualifications of Welders and Welding Procedures: Conform to Section 05 05 23 - Metal Fastenings as stated in the Issued for Construction Documents.

B. AISI Specifications: Comply with calculated structural characteristics of steel deck according to AISI S100 “North American Specification for the Design of Cold-Formed Steel Structural Members.”

1.05 DELIVERY, STORAGE, AND HANDLING

A. Store and handle products in conformance with manufacturer’s written directions.

PART 2 - PRODUCTS

2.01 PERFORMANCE REQUIREMENTS

A. Deck supplier must verify deck gages and capacities based on actual deck layout and span condition. Use heavier deck gages for conditions other than these, depending on manufacturer’s layout and contractor’s layout. Submit deviations in deck gages from those shown to the Resident Engineer, along with a valid ICC-ES/IAPMO-ES report for approval, prior to shop detailing.

B. In lieu of increasing deck gages, deck shoring is permitted at Contractor’s option if acceptable to the Resident Engineer.

2.02 PRODUCTS

A. Metal Roof and Composite Floor Deck:

1. ASC Steel Deck; Product.

2. Verco Manufacturing Co.

3. United Steel Deck, Inc.

4. Wheeling Corrugating Co.

5. Epic Metals Corporation.

2.03 MATERIALS

A. Metal Roof Deck:

1. Fabricate panels without top-flange stiffening grooves in conformance with SDI Publication No. 31.

2. Sheet Steel: ASTM A653/A653M, Structural Steel, Grade 33. Galvanizing to conform to ASTM A924, G90 zinc coating where deck is left permanently exposed. Galvanizing to conform to ASTM A924, G60 in all other locations.

3. Deck Type: profile, type, and gage as indicated in the Issued for Construction Documents.

B. Composite Metal Floor Deck:

1. Fabricate panels with integrally embossed or raised pattern ribs and interlocking side laps in conformance with SDI Publication No. 31.

2. Sheet Steel: ASTM A653/A653M, Structural Steel, Grade 33. Galvanizing to conform to ASTM A924 G90 zinc coating where deck is left permanently exposed. Galvanizing to conform to ASTM A924, G60 in all other locations.

3. Deck Type: profile, type, and gage as indicated.

C. Accessories:

1. Provide closures and flashings as indicated or required for complete and finished installation and as required to prevent leakage of concrete.

2. Side-Lap Fasteners: Corrosion-resistant, hexagonal washer head; self-drilling, carbon steel screws, No. 10 minimum diameter.

3. Provide cover caps for covering abutting ends where required.

4. Provide accessories and flashings of the same material as the deck and no lighter than 22-gage. Use the deck manufacturer's standard type, galvanized accessories as follows:

a. Adjusting plates or segments of deck units in locations too narrow to accommodate full-size units.

b. End closures to close the open ends at openings through the roof, where units terminate at exterior walls, and other locations where required.

c. Sump pans at drains as indicated, fabricated from metal not lighter than 14 gage. For drains, cut holes in the field, and repair and touch up coating as stated elsewhere in the Issued for Construction Documents.

D. Welding Electrodes: Conform to metal fastenings as stated in the Issued for Construction Documents.

E. Welded Headed Studs: Conform to Section 03 15 25 - Anchorage to Concrete as stated in the Issued for Construction Documents.

F. Galvanizing Repair Compound: ASTM A780/A780M.

2.04 FABRICATION

A. Metal Deck and associated Metal Fabrications: SDI Publication No. 31.

B. Welding and Welded Connections: Conform to Section 05 05 23 - Metal Fastenings as stated in the Issued for Construction Documents.

C. Prefabricate and preassemble in the shop as far as practicable.

2.05 SOURCE QUALITY CONTROL

A. Testing and Inspection:

1. Materials, fabrications, and welding are subject to inspections in the shop. Perform testing using an approved independent testing laboratory.

2. Weld Inspection: Conform to Section 05 05 23 - Metal Fastenings as stated in the Issued for Construction Documents.

PART 3 - EXECUTION

3.01 INSTALLATION

A. Install deck panels and accessories according to applicable specifications and commentary in SDI Publication No. 31, manufacturer's written instructions, and requirements in this Section.

B. Provide deck and accessories in conformance with the approved Shop Drawings.

C. Fasten deck panels to steel supporting members by arc spot (puddle) welds of the surface diameter indicated or arc seam welds with an equal perimeter that is not less than 1-1/2 inches long, and as follows:

1. Weld Diameter: 1/2 inch, effective.

2. Weld Pattern:

a. Roof Deck: As indicated on Issued for Construction Drawings.

b. Floor Deck: As indicated on Issued for Construction Drawings.

D. Locate deck bundles to prevent overloading of supporting members.

E. Side-Lap and Perimeter Edge Fastening: Fasten side laps and perimeter edges of panels between supports, at intervals not exceeding the lesser of 1/2 of the span or 12 inches, and as follows:

1. Mechanically fasten with self-drilling, No. 10 diameter or larger, carbon-steel screws.

2. Mechanically clinch or button punch.

F. End Bearing: Install deck ends over supporting frame with a minimum end bearing of 2 inches, with end joints butted.

G. Ends of sheets shall be lapped a minimum of 2 inches over the support.

H. Position roof drain pans with flange bearing on top surface of deck. Fusion weld at each deck flute:

1. Install reinforcing channels or zees in ribs to span between supports and weld.

I. Floor-Deck Closures: Weld steel sheet column closures and Z-closures to deck, according to SDI Publication No. 31 recommendations, to provide tight-fitting closures at open ends of ribs and sides of deck.

3.02 WELDING

A. Weld deck to supports in conformance with the approved Shop Drawings.

B. Procedures: Conform to Section 05 05 23 - Metal Fastenings welding requirements as stated in the Issued for Construction Documents.

3.03 GALVANIZING REPAIR

A. Repair galvanized surfaces damaged from welding, handling, or installation immediately after installation. See shop applied coatings for metal as stated elsewhere in the Contract Documents including ASTM A780 / A780M.

B. Apply galvanizing repair compound in conformance with manufacturer's written instructions.

C. Complete all galvanizing repair before concrete is placed.

3.04 FIELD QUALITY CONTROL

A. Inspect field welds and shear studs in conformance with Section 05 05 23 - Metal Fastenings as stated in the Issued for Construction Documents.

END OF SECTION

SECTION 05 40 00

COLD-FORMED METAL FRAMING

PART 1 - GENERAL

1.01 SUMMARY

A. Section includes:

1. Requirements for cold-formed metal framing.

1.02 REFERENCES

A. This Section incorporates by reference the latest revisions of the following documents:

1. American Iron and Steel Institute (AISI):

a. AISI S100 North American Specification for the Design of Cold-Formed Steel Structural Members.

2. ASTM International (ASTM):

a. ASTM A153/A153M Standard Specification for Zinc Coating (Hot-Dip) on Iron and Steel Hardware.

b. ASTM A653/A653M Standard Specification for Steel Sheet, Zinc-Coated (Galvanized) or Zinc-Iron Alloy-Coated (Galvannealed) by the Hot-Dip Process.

c. ASTM C645 - Standard Specification for Nonstructural Steel Framing Members.

d. ASTM C955 Standard Specification for Cold-Formed Steel Structural Framing Members.

e. ASTM C1007 Standard Specification for Installation of Load Bearing (Transverse and Axial) Steel Studs and Related Accessories.

f. ASTM C1513 Standard Specification for Steel Tapping Screws for Cold-Formed Steel Framing Connections.

3. American Welding Society (AWS):

a. AWS D1.1/D1.1M Structural Welding Code – Steel.

b. AWS D1.3/D1.3M Structural Welding Code – Sheet Steel.

4. The Society for Protective Coatings (SSPC):

a. SSPC Paint 20 Zinc-Rich Coating Type I – Inorganic and Type II – Organic.

1.03 SUBMITTALS

A. Submit:

1. Shop Drawings: Indicate component details, framed openings, bearing, anchorage, loading, welds, and type and location of fasteners, and accessories or items required of related work:

    a. Indicate framing layout.

    b. Describe method for securing studs to tracks and for bolted framing connections.

    c. Provide design from a Professional Engineer licensed in the State of Washington with stamp and signature on shop drawings.

2. Design calculations stamped by a registered Structural Engineer for the design of cold-formed steel structural framing, and by a registered Professional Engineer for the design of nonstructural steel framing.

B. Transmit:

1. Product Data:

    a. Data on standard framing members; describe materials and finish, product criteria, limitations and span tables.

    b. Manufacturer's data on factory-made framing connectors, showing compliance with requirements.

2. Certifications:

    a. Welders and welding procedures: transmit certifications conforming to Section 05 05 23 - Metal Fastenings as stated in the Issued for Construction Documents, including WABO certification.

3. Manufacturer's Installation Instructions: Indicate special procedures, conditions requiring special attention, and any other instructions.

4. Qualifications of the following:

    a. Engineer of Record.

    b. Manufacturer.

    c. Installer.

1.04 QUALITY ASSURANCE

A. Designer Qualifications: The Engineer of Record must have at least five (5) years of experience in design of this Work and licensed in the State of Washington.

B. Calculate structural properties of framing members in accordance with requirements of AISI S100.

C. Design structural elements under direct supervision of a Structural Engineer experienced in design of this Work and licensed in the State of Washington.

D. Manufacturer Qualifications: Company specializing in manufacturing the types of products specified in this section, and with minimum three (3) years of documented experience.

E. Installer Qualifications: Company specializing in performing the work of this section with minimum five (5) years of experience.

F. Welding: Conform to Section 05 05 23 - Metal Fastenings as stated in the Issued for Construction Documents for requirements for welders, welding procedures, and inspections.

G. The work of this section is subject to testing and inspection conforming to quality assurance/quality control as stated in the Issued for Construction Documents.

H. Regulatory Requirements:

1. Framing system must meet the requirements of the local authority having jurisdiction Building Code.

2. Furnish all calculations, engineer's stamps, drawings, and other items required by the local authority having jurisdiction to obtain approval of the installation.

I. Erection Tolerances:

1. Maximum Variation from True Position: 1/4 inch.

2. Maximum Variation of all Members from Plumb: 1/8 inch in 10 feet.

3. Maximum Variation of all Members from Level: 1/8 inch in 10 feet.

1.05 PROJECT CONDITIONS

A. Verify that field measurements are as indicated on the Issued for Construction Drawings.

PART 2 - PRODUCTS

2.01 MATERIALS

A. Framing System:

1. Provide primary and secondary framing members, bridging, bracing, plates, gussets, clips, fittings, reinforcement, and fastenings as required to provide a complete framing system.

B. Framing Materials:

1. Studs and Track: ASTM C955; studs formed to channel, "C", "Sigma" shape with punched web, and specialty shapes such as CH studs; U-shaped track in matching nominal width and compatible height:

a. Gage and depth: As required to meet specified requirements in the Issued for Construction Drawings.

b. Galvanized in accordance with ASTM A653/A653M G90/Z275 coating.

c. Vertical Deflection Track: As required to accommodate structural member deflection. Refer to deflection limit specified in the project design requirements and/or Issued for Construction documents.

C. Fasteners:

1. Self-Drilling, Self-Tapping Screws must be in accordance with ASTM C1513.

2. Bolts, Nuts and Washers: Hot dip galvanized in accordance with ASTM A153/A153M.

3. Anchorage Devices: Powder actuated fasteners approved by Resident Engineer. Submit each type and size proposed for approval. Anchorage device must have the ICC report stating it can be used for seismic application.

4. Welding: In conformance with AWS D1.1/D1.1M or D1.3/D1.3M as applicable.

2.02 ACCESSORIES

A. Bracing, Furring, Bridging: Formed sheet steel, thickness determined for conditions encountered; finish to match framing components.

B. Plates, Gussets, Clips: Formed sheet steel, thickness determined for conditions encountered; finish to match framing components.

C. Touch-Up Primer for Galvanized Surfaces: SSPC Paint 20, Type I - Inorganic, complying with VOC limitations of the US Environmental Protection Agency.

PART 3 - EXECUTION

3.01 EXAMINATION

A. Verify that substrate surfaces are ready to receive work.

3.02 INSTALLATION

A. Fasteners at Protected Zones:

1. Do not fasten to Protected Zones of steel braced frames in conformance with Section 05 5 23 - Metal Fastenings as stated in the Issued for Construction Documents.

B. Stud Framing:

1. Install components in accordance with manufacturers' instructions and ASTM C1007 and ASTM C645 requirements.

2. Place studs at no more than 16 inches on center; not more than 2 inches from abutting walls and at each side of openings. Connect studs to tracks using clip and tie method.

3. Construct corners using minimum of three studs. Install double studs at wall openings and door and window jambs.

4. Install studs full length in one piece. Splicing of studs is not permitted.

5. Install load bearing studs, brace, and reinforce to develop full strength and achieve design requirements.

6. Coordinate placement of insulation in multiple stud spaces made inaccessible after erection.

7. Install intermediate studs above and below openings to align with wall stud spacing.

8. Provide deflection allowance in stud track, directly below horizontal building framing at non-load bearing framing.

9. Attach cross studs to studs for attachment of fixtures anchored to walls.

10. Install framing between studs for attachment of mechanical and electrical items, and to prevent stud rotation.

11. Touch-up field welds and damaged galvanized surfaces with primer.

C. Soffit Joists:

1. Install framing components in accordance with manufacturer's instructions.

2. Make provisions for erection stresses. Provide temporary alignment and bracing.

3. Place soffit joists at 16 inches on-centers; not more than 2 inches from abutting walls. Connect joists to supports using fastener method.

D. Escalator Shrouds:

1. Install shroud support components in accordance with manufacturers' specifications and ASTM C1007 and ASTM C645 requirements.

2. Place components not more than 16 inches on center; not more than 2 inches from escalator assembly and at each side of openings. Connect studs to furring tracks using clip and tie method or other method as approved by Resident Engineer.

3. Coordinate with escalator assembly design documents and field conditions as necessary.

4. Install cross-framing between framing studs for attachment of mechanical and electrical or other items, and to prevent stud rotation.

END OF SECTION

SECTION 05 43 21

METAL STRUT FRAMING SYSTEM

PART 1 - GENERAL

1.01 SUMMARY

A. Section includes:

1. Requirements for final engineering (delegated design), furnishing and installing continuous slot, bolted metal framing channels and all associated fittings and hardware.

a. Support framing for miscellaneous items such as (including but not limited to):

1) Trapeze type supports for cable tray, conduit, pipe and other similar systems.

2) Bolted metal framing as a surface metal raceway.

1.02 REFERENCES

A. This Section incorporates by reference the latest revisions of the following documents:

1. ASCE 7- Minimum Design Loads and Associated Criteria for Buildings and Other Structures

2. American Iron and Steel Institute (AISI):

a. AISI S100 North American Specification for the Design of Cold-Formed Steel Structural Members.

3. ASTM International (ASTM):

a. ASTM A653/A653M Standard Specifications for Steel Sheet, Zinc- Coated (Galvanized) or Zinc-Iron Alloy-Coated (Galvannealed) by the Hot-Dip Process.

b. ASTM A1008/A1008M Standard Specification for Steel, Sheet, Cold- Rolled, Carbon, Structural, High-Strength Low-Alloy, High-Strength Low- Alloy with Improved Formability, Required Hardness, Solution Hardened, and Bake Hardenable.

c. ASTM B633 Standard Specification for Electrodeposited Coatings of Zinc on Iron and Steel.

d. Metal Framing Manufacturers Association (MFMA).

e. MFMA-4 Metal Framing Standards Publication.

f. MFMA-103 Guidelines for the Use of Metal Framing.

4. IBC- International Building Code.

5. The Society for Protective Coatings (SSPC):

   a. SSPC SP 6 Commercial Blast Cleaning.

6. National Fire Protection Association (NFPA).

   a. NFPA 70 National Electrical Code, Chapter 3, Article 386 “Surface Metal Raceways” and Article 388 “Surface Nonmetallic Raceways”.

1.03 SUBMITTALS

A. Submit:

1. Shop Drawings: Drawings of strut and accessories including fasteners. Clamps, brackets, hanger rods, and fittings stamped by a Professional Structural Engineer licensed in the State of Washington.

2. Calculations: Calculations stamped by a Professional Structural Engineer licensed in the State of Washington. Provide calculations for struts and accessories demonstrating adequacy to support imposed loads. At a minimum, include the following:

   a. Design Criteria.

   b. Selection of framing members, fittings and accessories.

   c. Stress and deflection analysis.

   d. Reactions and imposed loads transmitted to primary structure.

B. Transmit:

1. Product Data of strut members including, but not limited to, types, materials, finishes, gauge thickness, and hole patterns. For each different strut cross- section, transmit cross sectional properties including Section Modulus (S) and Moment of Inertia (I).

2. Qualifications:

   a. Professional Structural Engineer.

   b. Manufacturers.

1.04 QUALITY ASSURANCE

A. Manufacturers: Firms regularly engaged in the manufacture of bolted metal framing of the types required, whose products have been in satisfactory use in similar service for not less than five (5) years.

B. MFMA Compliance: Comply with the latest revision of MFMA Publication No. MFMA-4.

C. NEC Compliance: Comply with the latest revision NFPA 70 – Articles 386 and 388.

D. Bolted framing channels and fittings must have the manufacturer’s name, part number, and material heat code identification number stamped in the part itself for identification. Make material certification sheets and test reports available by the manufacturer upon request.

E. Pre-Installation Conference: Prior to installation, conduct Readiness Review Meeting as defined in Section 01 45 10 - Quality Assurance / Quality Control.

1.05 DELIVERY, STORAGE, AND HANDLING

A. Deliver strut systems and components carefully to avoid breakage, denting, and scoring finishes. Do not install damaged equipment.

B. Store strut systems and components in original cartons and in clean dry space; protect from weather and construction traffic.

PART 2 - PRODUCTS

2.01 DELEGATED DESIGN REQUIREMENTS

A. Local authorities having jurisdiction Building Code.

B. American Iron and Steel Institute, AISI S100.

C. Manufacturer's published design criteria.

D. For the metal strut system at the ceiling of the station platform, design the system to support the following loads:

1. Gravity Loads: Strut system self-weight, plus the greater of the following:

a. Uniform load of 10 pounds per square foot.

b. Uniform load of 5 pounds per square foot, plus a concentrated load of 500 pounds located to produce the maximum stress in the element being designed.

c. Actual weights of supported elements.

2. Seismic loads: Generated by the mass of the system self-weight plus the actual weights of the supported elements in accordance with IBC and ASCE 7.

3. Wind Loads: Wind pressure on the framing and components supported by the framing in accordance with IBC and ASCE 7.

E. For Metal Strut Framing Systems used for locations other than at the station platform ceiling, as indicated on the drawings, design the systems to support the following loads:

1. Gravity Loads: Strut system self-weight, plus the greater of the following:

a. A concentrated load of 250 pounds located to produce the maximum stress in the element being designed.

b. Actual weights of supported elements.

2. Seismic loads: Generated by the mass of the system self-weight plus the actual weights of the supported elements in accordance with IBC and ASCE 7.

3. Wind Loads: Wind pressure on the framing and components supported by the framing in accordance with IBC and ASCE 7.

2.02 PRODUCTS

A. Manufacturer: Subject to compliance with these specifications, install strut systems manufactured by:

1. Cooper B-Line, Inc.
2. Flex-Strut, Inc.
3. Powerstrut Corp.
4. Thomas & Betts Corp
5. Unistrut Division of Tyco, Inc.
6. Unitron Products, Inc.

2.03 MATERIALS

A. Strut Channel Framing:

1. Slotted Channel Framing: 1-5/8 inch wide cold-formed metal channels with continuous slot complying with MFMA Publication No. MFMA-4.
2. Material: Steel complying with ASTM A1008/A1008M, commercial steel, Type B; 0.0677- inch minimum thickness.

B. Fasteners:

1. Steel Bolts and Nuts: As stated in the Issued for Construction Documents.
2. Post-Installed Anchors: Anchor bolt assembly with capability to sustain, without failure, a load equal to six times the load imposed when installed in unit masonry and four times the load imposed when installed in concrete. See Section 03 15 25 - Anchorage to Concrete and as stated in the Issued for Construction Documents.
   a. Material for Anchors in Interior Locations: Carbon-steel components zinc-plated to comply with ASTM B633, Class Fe/Zn5 is permitted, in addition to the anchor types specified in Section 03 15 25 - Anchorage to Concrete.

2.04 FINISH

A. Preparation:

1. Prepare uncoated ferrous-metal surfaces to comply with SSPC SP 6.
2. Treat prepared metal with iron-phosphate pretreatment, rinse, and seal surfaces.

B. Finish all components except fasteners with flat black coating, manufacturer's option of the following:

1. For all channels and components other than concrete inserts: Apply epoxy primer and topcoats to surfaces. Apply at spreading rates specified by coating manufacturer. See painting and coating requirements as stated in the Issued for Construction Documents.
2. For concrete inserts: Pre-galvanized zinc complying with ASTM A653/A653M.

2.05 FABRICATION

A. Cut, drill, and punch metals cleanly and accurately. Remove burrs and ease edges to a radius of approximately 1/32 inch, unless otherwise indicated. Remove sharp or rough areas on exposed surfaces.

B. Form exposed connections with hairline joints, flush and smooth, using concealed fasteners where possible. Use Phillips flat-head (countersunk) screws or bolts as exposed fasteners, unless otherwise indicated. Locate joints where least conspicuous.

C. Provide for anchorage of type indicated; coordinate with supporting structure. Space anchoring devices to secure metal fabrications rigidly in place and to support indicated loads.

PART 3 - EXECUTION

3.01 INSTALLATION

A. Cutting, Fitting, and Placement: Perform cutting, drilling, and fitting required for installing metal fabrications. Set metal fabrications accurately in location, alignment, and elevation; with edges and surfaces level, plumb, true, and free of rack; and measured from established lines and levels.

B. Fastening to In-Place Construction: Provide anchorage devices and fasteners where metal fabrications are required to be fastened to in-place construction. Provide threaded fasteners for use with concrete and masonry inserts, toggle bolts, through bolts, lag bolts, wood screws, and other connectors.

C. Install framing and supports to comply with requirements of items being supported, including manufacturers' written instructions and requirements indicated on Shop Drawings.

D. Install strut in accordance with MFMA Publication No. MFMA-103: in accordance with equipment manufacturer's specifications, and with recognized industry practices.

E. Tighten nuts and bolts to the following values:

Bolt Size	Torque (ft.-lbs.)
1/4 - 20	6
5/16 - 18	11
3/8 - 16	19
1/2 - 13	50

F. Electrical grounding required for metal strut framing located within 15-foot radius of centerline of track. Conform to grounding and bonding for electrical systems installation requirements as stated in the Issued for Construction Documents.

3.02 FINISH REPAIR

A. Clean and touch up drilled holes, cuts, and minor abrasions in finishes with air dried coating that matches color and gloss and is compatible with the factory-applied finish coating as recommended by the manufacturer.

END OF SECTION

SECTION 05 52 00

METAL RAILINGS

PART 1 - GENERAL

1.01 SUMMARY

A. Section includes:

1. Requirements for metal railings outside limits of station lobby and platform as follows:

a. Emergency guardrails.

b. Metal safety railings.

c. Stair railings and guardrails as detailed on Drawings.

d. Wall-mounted handrails.

B. Delegated engineering design of metal railings and related infill panels.

C. For metal railings within limits of stations, see 05 73 00 – Decorative Metal Railings.

1.02 REFERENCES

A. This Section incorporates by reference the latest revisions of the following documents:

1. Aluminum Association (AA):

a. AA DAF45 Designation System for Aluminum Finishes.

2. American Society for Testing and Materials International (ASTM).

a. ASTM A36 Standard Specification for Carbon Structural Steel.

b. ASTM A53/A53M Standard Specification for Pipe, Steel, Black and Hot-Dipped, Zinc-Coated, Welded and Seamless.

c. ASTM A108 Standard Specification for Steel Bar, Carbon and Alloy, Cold-Finished

d. ASTM A123/A123M Standard Specification for Zinc (Hot-Dip Galvanized) Coatings on Iron and Steel Products.

e. ASTM A269/A269M Standard Specification for Seamless and Welded Austenitic Stainless-Steel Tubing for General Service.

f. ASTM A312/A312M Standard Specification for Seamless, Welded, and Heavily Cold Worked Austenitic Stainless-Steel Pipes.

g. ASTM A500/A500M Standard Specification for Cold-Formed Welded and Seamless Carbon Steel Structural Tubing in Rounds and Shapes.

h. ASTM B209 Standard Specification for Aluminum and Aluminum-Alloy Sheet and Plate.

i. ASTM B211 Standard Specification for Aluminum and Aluminum-Alloy Rolled or Cold Finished Bar, Rod, and Wire.

j. ASTM B221 Standard Specification for Aluminum and Aluminum-Alloy Extruded Bars, Rods, Wire, Profiles and Tubes.

k. ASTM B241/B241M Standard Specification for Aluminum and Aluminum-Alloy Seamless Pipe and Seamless Extruded Tube.

l. ASTM B429/B429M Standard Specification for Aluminum-Alloy Extruded Structural Pipe and Tube.

m. ASTM B483/B483M Standard Specification for Aluminum and Aluminum-Alloy Drawn Tube and Pipe for General Purpose Applications

n. ASTM E935 Standard Test Methods for Performance of Permanent Metal Railing Systems and Rails for Buildings.

o. ASTM E985 Standard Specification for Permanent Metal Railing Systems and Rails for Buildings.

3. American Welding Society (AWS):

a. AWS D1.1/D1.1M – Structural Welding Code – Steel.

b. AWS D1.2/D1.2M – Structural Welding Code – Aluminum.

c. AWS D1.6/D1.6M – Structural Welding Code – Stainless Steel.

4. Authority Having Jurisdiction (AHJ) Reference Standard(s), where applicable.

B. Definitions:

1. Handrail: A railing system at trench, stairs, and walls intended for grasping by the hand for guidance or support.

2. Guardrail: A railing system at open edge of catwalks, stairs or elevated walking surfaces that minimizes the possibility of a fall from the walking surface to the lower level.

3. Emergency Guardrail: A railing system located on aerial guideways and retaining walls not open to the public.

4. Metal Safety Railing: A railing system located outside limits of stations, constructed in accordance with the standards and requirements of the Authority Having Jurisdiction.

1.03 SUBMITTALS

A. Submit the following:

1. Shop Drawings:

a. Indicate dimensions, materials, profiles, sizes, connection attachments, anchorage, size and type of fasteners, and accessories.

b. Indicate welded connections with standard AWS welding symbols. Indicate net weld lengths.

c. Include erection drawings, elevations, and details as necessary to completely show each installation.

d. Indicate fabrication and installation of handrails and railings, including plans, elevations, sections, details of components, and attachments to other units of Work.

e. Include structural analysis data sealed and signed by the qualified professional engineer who was responsible for their preparation.

2. Samples:

a. Submit four (4) each, 8-inch-long samples of handrail.

b. Submit four (4) each samples of elbow, wall bracket, and end stop.

B. Transmit the following:

1. Product Data:

a. Manufacturer's product lines of railings assembled from standard components.

b. Grout, anchoring cement, and paint products.

2. Certifications for:

a. Delegated design engineer license – Licensed in the State of Washington.

b. Welders and welding procedures: Submit certifications as specified in ”Metal Fastening” Division 05.

3. Product Test Reports: Based on evaluation of comprehensive tests performed by a qualified testing agency, according to ASTM E894 and ASTM E935.

4. Preconstruction test reports.

5. Evaluation Reports: For post-installed anchors, from ICC-ES.

1.04 QUALITY ASSURANCE

A. Delegated Design Engineer: Employ a registered professional engineer, licensed in the State of Washington, to engineer structural components of the metal railing elements and connections, including attachments and anchorages. This engineer shall prepare, stamp, and sign required structural calculations; this same engineer shall also approve the fabricator's shop drawings.

B. Installer: Trained and approved by manufacturer.

C. Welding Qualifications: Qualify procedures and personnel according to the following:

1. AWS D1.1/D1.1M.

2. AWS D1.2/D1.2M

3. AWS D1.6/D1.6M.

D. Mock-Ups: Build mockups to verify selections made under Sample submittals, to demonstrate aesthetic effects, and to set quality standards for fabrication and installation:

1. Build mockups for each form and finish of railing consisting of two posts, top rail, infill area, and anchorage system components that are full height and are not less than 24 inches in length.

2. Subject to compliance with requirements, approved mockups may become part of the completed Work if undisturbed at time of Substantial Completion.

E. The work of this section is subject to testing and inspection conforming to quality assurance/quality control as stated elsewhere in the Contract Documents.

F. Regulatory Requirements:

1. Railings and attachment to building construction shall meet the requirements of the local authority having jurisdiction Building Code.

2. Delegated Design Data: Furnish engineering analysis, engineer's stamps, drawings, and other data for delegated design items to local authority having jurisdiction and obtain approval prior to submitting Shop Drawings.

1.05 PROJECT CONDITIONS

A. Field Measurements: Check actual locations of walls, slabs, framing, and other construction to which work of this section must fit, by accurate field measurements before fabrication; show recorded measurements on final shop drawings. Coordinate fabrication, delivery and installation schedule with construction progress to avoid delay of work.

1. Where field measurements cannot be made without delaying the Work, guarantee dimensions and proceed with fabrication of products without field measurements. Coordinate construction with work of other trades to ensure that actual dimensions correspond to guaranteed dimensions. Allow for fitting and trimming.

PART 2 - PRODUCTS

2.01 PERFORMANCE REQUIREMENTS

A. Design in accordance with ASTM E985.

B. Emergency Guardrails and Free-Standing Railing at Stair On Grade: Fabricate and install in accordance with the drawings:

1. Integrated directional braille signage at handrails to comply with LEED requirements when applicable and required.

C. Metal Safety Railing: Fabricate in accordance with applicable AHJ reference standard(s) as minimum. Increase height if indicated in drawings. Increase member sizes if required to meet design requirements below.

D. Metal Safety Railing, and Wall Mounted Handrail, Structural Performance: Engineer, fabricate, and install metal fabrications to withstand the following structural loads without exceeding the allowable design working stress of the materials involved, including anchors and connections. Apply each load to produce the maximum stress in each respective component of each metal fabrication:

1. Top of handrail systems: Concentrated load at any point, of 300 pounds or uniform load of 100 pounds per lineal foot applied non-concurrently, vertically, downward, or horizontally. Concentrated and uniform loads need not be assumed to act concurrently.

2. Handrails not serving as top rails: Concentrated load at any point, of 200 pounds or uniform load of 50 pounds per lineal foot applied non-concurrently, vertically, downward, or horizontally. Concentrated and uniform loads need not be assumed to act concurrently.

3. Infill area of handrail systems: Capable of withstanding a horizontal concentrated load of 200 pounds applied to one square foot at any point in the system including panels, intermediate rails, balusters, or other elements composing the infill area.

4. Handrails: An additional load of 25 pounds per square foot (psf) acting horizontally over the entire tributary area including openings shall be applied simultaneously with the load on the top rail.

2.02 ALUMINUM RAILING MATERIALS

A. Aluminum Pipe: Schedule 40; ASTM B429, ASTM B241/B241M, or ASTM B483/B483M.

B. Aluminum Tube: Minimum wall thickness of 0.127 inch; ASTM B429, ASTM B241/B241M, or ASTM B483/B483M.

C. Rails: Minimum 1-1/2-inch diameter, extruded tubing conforming to ASTM B221.

D. Bars, sheet, and plate: ASTM B209 or ASTM B211.

E. Welding Fittings: No exposed fasteners; cast aluminum.

F. Mounting: Adjustable Brackets and flanges, with aluminum inserts for casting in concrete.

G. Straight Splice Connectors: Concealed spigot; cast aluminum.

H. Exposed Fasteners: Flush countersunk screws or bolts; consistent with design of railing.

2.03 STEEL RAILING MATERIALS

A. Steel Tube: ASTM A500, Grade B cold-formed structural tubing.

B. Steel Pipe: ASTM A53/A53M, Grade B Schedule 40, black finish.

C. Steel Flat Bars: ASTM A36 or ASTM A108

D. Welding Fittings: Factory- or shop-welded from matching pipe or tube; seams continuously welded; joints and seams ground smooth.

E. Exposed Fasteners: No exposed bolts or screws allowed.

F. Mounting: Adjustable Brackets and flanges, with steel inserts for casting in concrete.

G. Shop and Touch-Up Primer unless otherwise indicated: refer to 09 96 00 – High Performance Coatings.

2.04 STAINLESS STEEL RAILING MATERIALS

A. Tube: ASTM A269, Grade B cold-formed structural tubing.

B. Pipe: ASTM A312/A312M, Type 316, Number 4 satin finish

C. Welding Fittings: Factory or shop-welded from matching pipe or tube; seams continuously welded; joints and seams ground smooth.

D. Exposed Fasteners: No exposed bolts or screws allowed.

E. Mounting: Adjustable Brackets and flanges, with steel inserts for casting in concrete.

2.05 METAL RAIL INFILL PANELS:

A. Products selected from the following approved manufacturers, or as approved by ST as equal, as detailed on Issued for Construction drawings:

1. Ohio Gratings, Inc.

2. The Western Group.

3. Grating Pacific.

4. Hunter Douglas Architectural Products.

5. McNichols.

6. Gage Architectural Products.

B. Minimum wire and panel gauges as determined by delegated engineer to meet structural performance requirements, unless noted otherwise on Issued for Construction Drawings:

C. Include all metal Framing Members: sub-girts, zee clips, base and sill angles and channels required for a complete installation.

D. Anchors, Clips and Accessories:

1. Exposed Fasteners: Stainless Steel; permitted only where absolutely unavoidable and subject to approval by resident engineer.

2. Screws: Self-drilling or self-tapping type 410 stainless steel hex washer head.

3. Bolts, nuts, and washers: Stainless steel.

4. Provide fabricators standard corrosion-resistant accessories, including clips, fasteners, anchorage devices and attachments.

E. Include shop and field-applied high-performance coatings for all components where finish is not otherwise indicated.

2.06 FABRICATION

A. Accurately form components to suit specific project conditions and for proper connection to building structure.

B. Fabricate to comply with requirements indicated for architectural design, dimensions, details, finish, and member sizes, including wall thickness of pipe, post spacing and anchorage, but not less than that required to support all structural loads.

1. Connect members by butt welding, unless indicated otherwise.

2. Change directions by insertion of elbow fittings or by radius bends.

3. Form curved sections by rolling to produce uniform curvature indicated, without buckling, twisting, or otherwise deforming exposed surfaces of railing component.

4. Provide wall returns at ends of wall mounted handrails to eliminate any gap between rail and wall; or return railing to floor.

5. Close exposed ends of pipe by welding 3/16-inch steel plate in place or by use of prefabricated fittings.

6. For steel railings and handrails formed from steel pipe with galvanized finish, galvanize fittings, brackets, fasteners, sleeves and other ferrous components.

7. For interior steel railings formed from black steel pipe, provide non-galvanized ferrous metal fittings, brackets, fasteners, and sleeves, except galvanized anchors embedded in exterior masonry and concrete construction.

C. Provide anchors and other components as required to attach to structure, made of same materials as railing components unless otherwise indicated; where exposed fasteners are unavoidable provide flush countersunk fasteners.

1. For anchorage to concrete refer to 03 15 25 – Anchorage to Concrete.

2. For anchorage to masonry provide brackets to be embedded in masonry for bolting anchors.

3. For anchorage to metal-framed walls provide backing plates for bolting anchors.

4. Fillers: Provide steel sheet or plate fillers of size and thickness indicated or required to support structural loads of handrails where needed to transfer wall bracket loads through wall finishes to structural supports. Size fillers to suit wall finish thicknesses. Size fillers to produce adequate bearing to prevent bracket rotation and overstressing of substrate.

D. Provide welding fittings to join lengths, seal open ends, and conceal exposed mounting bolts and nuts, including but not limited to elbows, T-shapes, splice connectors, flanges, escutcheons, and wall brackets.

E. Dissimilar Metals: Provide Nylon or other manufacturer suggested gaskets at all mounting flanges, and other areas where railing system is scheduled to attach to dissimilar metals or concrete. Gaskets shall be cut to match profile of mounting flange.

F. Fit and shop assemble components in largest practical sizes for delivery to site.

G. Fabricate components with joints tightly fitted and secured. Provide spigots and sleeves to accommodate site assembly and installation.

H. Exterior Components: Continuously seal joined pieces by intermittent welds and plastic filler. Drill condensate drainage holes at bottom of members at locations that will not encourage water intrusion.

I. Interior Components: Continuously seal joined pieces by intermittent welds and plastic filler.

J. Welding: Select welding wire, method, and weld temperature to produce welds that will match color of adjacent parent material after finishing.

K. Grind exposed joints flush and smooth with adjacent finish surface. Make exposed joints butt tight, flush, and hairline.

L. Accurately form components to suit specific project conditions and for proper connection to building structure.

M. Shear and punch metals cleanly and accurately. Remove burrs.

N. Ease exposed edges to a radius of approximately 1/32 inch unless otherwise indicated. Form bent-metal corners to the smallest radius possible without causing grain separation or otherwise impairing the work.

2.07 FINISHES

A. Aluminum:

1. Finish exposed aluminum components with fluoropolymer finish (HPC-4) specified in Section 09 96 00 – High-Performance Coatings.

2. Mill Finish Aluminum: AA DAF45 M12/C12, non-specular as fabricated, chemically cleaned.

B. Stainless Steel:

1. #4 (180 grit) centerless ground.

C. Steel:

1. Include shop and field-applied high-performance coatings for all components where finish is not otherwise indicated.

2. For galvanized finish: ASTM A123/A123M

PART 3 - EXECUTION

3.01 EXAMINATION

A. Verify that field conditions are acceptable in accordance with fabricator's and/or manufacturer's instructions and are ready to receive work.

3.02 PREPARATION

A. Clean and strip primed steel items to bare metal where site welding is required.

B. Supply items required to be cast into concrete or embedded in masonry with setting templates, for installation as work of other sections.

C. Apply one (1) coat of bituminous paint to concealed aluminum, steel and stainless-steel surfaces that will be in contact with cementitious or dissimilar materials.

3.03 INSTALLATION

A. Install in accordance with fabricator's and/or manufacturer's instructions.

B. Install components plumb and level, accurately fitted, free from distortion or defects, with tight joints.

C. Anchor railings securely to structure.

D. Field weld anchors as indicated on Issued for Construction Drawings. For metals receiving finish, touch-up welds with primer. Grind welds smooth.

E. Conceal anchor bolts and screws whenever possible. Where not concealed, use flush countersunk fastenings.

F. Pipe railings and handrails: Adjust railings prior to anchoring to ensure matching alignment of abutting joints. Space posts at spacing indicated or as required by design loadings. Plumb posts in each direction. Secure posts and railing ends to building as follows:

1. Secure handrails to walls with wall brackets and end fittings. Locate brackets as indicated, or as required to support structural loads. Secure wall brackets and wall return fittings to building construction as follows:

    a. Use bracket with flange tapped for concealed anchorage to threaded hanger bolt.

    b. For concrete and solid masonry refer to 03 15 25 – Anchorage to Concrete.

    c. For hollow masonry anchorage, use toggle bolts having square heads.

G. For steel framed gypsum board assemblies, fasten brackets directly to steel framing or concealed anchors using self-tapping screws of size and type required to support structural loads.

H. Assemble with spigots and sleeves to accommodate tight joints and secure installation.

3.04 ERECTION TOLERANCES

A. Maximum Variation from Plumb: 1/4 inch per floor level, non-cumulative.

B. Maximum Offset from True Alignment: 1/4 inch.

C. Maximum Out-of-Position: 1/4 inch.

D. Offset alignment between two adjacent members abutting end to end, in line: .03 inch, maximum.

3.05 REPAIR/ RESTORATION

A. Replace damaged products as directed by Resident Engineer.

1. Exception: Field Repairs of minor damage to finishes are permitted only when approved in writing by Resident Engineer, panel manufacturer and fabricator.

2. Field repairs to Finishes: Using materials and methods sufficient that repairs are not discernable when viewed at a distance or 10 feet under typical lighting conditions.

3.06 PROTECTION

A. Protect installed products until Date of Acceptance. Protect metal finishes from damage during construction period with temporary coverings approved by panel manufacturer. Remove coverings at time of Acceptance.

END OF SECTION

SECTION 05 52 30

BARRIER CABLE SYSTEMS

PART 1 - GENERAL

1.01 SUMMARY

A. Section includes:

B. Requirements for barrier cable systems in parking structures.

1.02 REFERENCES

A. Post-Tensioning Institute (PTI):

1. Technical Note 14, Design of Prestressed Barrier Cable Systems.

2. PTI M10.2 Specification for Unbonded Single Strand Tendons.

3. PTI M10.4 Specification for Seven Wire Steel Strand Barrier Cable Applications.

B. American Society for Testing and Materials (ASTM):

1. ASTM A416 Standard Specification for Low-Relaxation, seven-Wire Steel Strand for Prestressed Concrete.

2. ASTM A475 Standard Specification for Zinc-Coated Steel Wire Strand.

3. ASTM A36 Standard Specification for Carbon Structural Steel.

C. International Code Council (ICC):

1. ICC International Building Code (IBC).

D. American Society of Civil Engineers (ASCE) / Structural Engineering Institute (SEI):

1. ASCE/SEI 7 Minimum Design Loads for Buildings and Other Structures.

E. Definitions:

1. Anchorages: A mechanical device comprising all components required to anchor the prestressing steel and permanently transfer the post-tensioning force from the prestressing steel to the structure.

2. Barrel Anchor: A cylindrical metal device housing the wedges and normally used with a bearing plate to transfer the prestressing force to the concrete.

3. Barrier Strand: Seven-wire prestressing steel strand used in barrier cable systems.

4. Back-stressing: A stressing procedure that ensures that the wedges are properly seated into the anchor at a given location on the tendon.

5. Cable: A term used by some to denote a prestressing strand or a single-strand tendon.

6. Final Effective Force: Force remaining in prestressing steel after all losses have occurred.

7. Hand Seating Tool – A small handheld device used to properly align (seat) the wedges in the anchor prior to attaching the jack to the strand for stressing.

8. Initial Tensioning Force: The initial force that is applied to a barrier cable that will result in the retention of the minimum final effective force as specified by the Issued for Construction documents.

9. Jack: A mechanical device used for applying stressing force to the barrier cable.

10. Jacking Force: See Initial Tensioning Force.

11. MUTS: Minimum Ultimate Tensile Strength.

12. Seating Loss: The relative movement of the wedges into the anchor cavity during the transfer of the prestressing force to the anchorage, resulting in some loss of prestressing force.

13. Strand: High-strength prestressing steel wires helically placed around a center wire.

14. Wedges: Pieces of tapered metal with serrations, which bite into the prestressing strand during transfer of prestressing force.

1.03 SUBMITTALS

A. Submit:

1. Shop Drawings: Installation drawings including plans, elevation, section, details, and note stating that the shop drawings were prepared by or under the supervision of an installer qualified per Article 1.03.B.4, herein, detailing barrier cable layout and installation procedures including the following:

   a. Cable run arrangement, length, anchor location, anchor details and designation of barrier cables. Installation and fabrication details of all angles, posts or fabricated steel members needed and their anchoring into the structure.

   b. Stressing procedures and jacking forces to result in the final effective forces.

2. Calculations stamped by a Professional Civil or Structural Engineer licensed in the state of Washington and produced in accordance with the International Building Code and Post-Tensioning Institute, and provide a minimum of the following:

   a. Calculation of tendons minimum force for anti-sag criteria.

   b. Calculation of tendons maximum force under design loads and verification of acceptance criteria for each cable run.

   c. Verification of the maximum deflection criteria for the barrier under the design load for each significant cable.

   d. Determination of the pre-tensioning requirements to cover all criteria above including losses unless a specific procedure is in place to compensate for seating losses.

e. Load summary of permanent/accidental forces applied by the barrier for verification of their acceptability by the Resident Engineer.

f. Design calculations for all steel posts, angles or hardware used in the construction of the barrier cable. Perform the design based on design loads including direct force on steel posts used in the barrier construction.

3. Operation and Maintenance Manual: The system installer must submit a system maintenance and operations guide to Sound Transit providing a minimum of the following data:

a. Recommended inspection periodicity and procedures.

b. Maintenance and repair procedures for minor damage.

c. Maintenance procedure for cable anchors to allow for ease of maintenance and replacement without damaging existing structural elements.

d. Action plan in case of major damage impairing the system functionality.

B. Transmit:

1. Certified Mill Test Reports upon request for each coil, reel, or pack of strand containing as a minimum the following information:

a. Type and Grade.

b. Coil Number.

c. Ultimate Tensile Strength.

d. Nominal Diameter and Steel Area of Strand.

e. Modulus of Elasticity.

2. Hardware Data Sheets for each hardware component used in the cable anchoring system.

3. Stressing records filled out by testing agency during stressing operations on the cable systems:

a. Name of the project.

b. Date of approved installation drawings used for installation and stressing.

c. Date of stressing operation.

d. Weather conditions including temperature and rainfall.

e. Name of the individual in charge of stressing operation.

f. Serial or identification numbers of jacks and gauge.

g. Date of jack and gauge calibration certifications.

h. Gauge pressure to achieve required stressing force per supplied calibration chart.

i. Tendon identification mark.

j. Actual gauge pressure.

k. Representative photographs.

4. Qualifications:

a. Design and install the barrier cable system in accordance with the following:

1) Design the barrier cable system in its entirety under the responsibility of the specialty barrier cable system company.

2) The professional engineer producing the system design calculations must have a minimum experience of five (5) years and ten (10) barrier cable projects of similar size and scope.

3) Perform the installation by a PTI Certified Level 2 Installer of Unbonded Post-Tensioning with a minimum experience of five (5) years and ten (10) barrier cable projects of similar size and scope.

4) Supply the properly calibrated stressing equipment for the application and/or barrier cable systems that are necessary to perform the work. Follow calibration requirements listed in PTI's Specification for Unbonded Single Strand Tendons.

b. Prequalified Vendors:

1) Dywidag-System International, USA Inc.

2) Approved equal satisfying Article 1.03.B.4, herein this specification.

5. Warranty:

a. Provide a written warranty letter as specified in Article 1.04.A, herein this specification, at the completion of the project.

1.04 WARRANTY

A. Minimum period of five (5) years on all materials, components and their installation.

PART 2 - PRODUCTS

2.01 PERFORMANCE REQUIREMENTS

A. The barrier cable system must be compliant with the International Building Code and meet the following requirements.

B. Automobile/Pedestrian:

1. Design barrier cable systems for vehicular and pedestrian design loads per ASCE 7. Perform strength verification of all the system components (cable, anchoring, hardware, posts, brackets, and structure members they attach to) with a 1.6 load factor.

2. Minimum of 42 inches in height constructed such that a 4 inch diameter sphere must not pass through any opening up to a height of 34 inches. Above 34 inches, an 8 inch diameter sphere not to pass through the openings.

3. Design deflections to insure the top rail minimum elevation of 42 inches and cable spacing (4 inch maximum up to 34 inches of the floor; then 8 inches maximum from there to 42 inches, wherever a 30 inch or greater fall risk occurs).

4. Design must conform to Post-Tensioning Institute Technical Note 14, Design of Prestressed Barrier Cable Systems.

C. Design, fabricate and install the barrier cable system, including all the system's fabricated steel components and anchoring to the structural members with a single specialty company with qualifications in compliance with paragraph Article 1.03.B.4, herein.

D. Evaluate and provide intermediate through-posts and/or cable spacers to ensure that when collision occurs, all cables act in unison without excessive vertical deflection.

E. Do not design barrier cables running through an expansion joint.

2.02 MATERIALS

A. Prestressing Steel:

1. Use seven-wire steel strand for prestressing steel barrier cable which consist of one center wire with six wires spirally wrapped around it. For vehicular applications, strand nominal diameter must be at least ½ inches and MUTS of 250 ksi or better. Single wires before galvanizing must meet the requirements of ASTM A 416, grade 250.

2. Galvanize all exposed barrier cable elements. Zinc coating must comply with ASTM specification A 475 Class A, table 2 coating weight. Apply galvanized coatings by either hot-dip or electro plating process to ensure complete zinc around each individual wire of the strand.

3. Use of polyethylene (plastic) or epoxy coated strands is not permitted.

4. Identify strand pack reels or coils at the source as to grade, coil number and type.

5. Performance Criteria:

a. Strand used for barrier cable must meet the minimum requirement of the appropriate ASTM specification as the project specification. No exception will be permitted.

b. The galvanized coating used for the barrier cable must be free of damage so that the uncoated steel is not exposed to the elements. Reject cracked or brittle coating.

B. Anchorage:

1. Design anchorages or attachments of vehicle barrier systems to be capable of transmitting vehicle loads to the structure. Design each component of the anchorage system to resist the loads that will result from both the applied prestressing force and the vehicle loads. The anchorage system includes the barrier cable terminations, the supporting structural member, and any hardware used to attach the barrier cable to its supporting structural member.

2. Design wedge type anchorage systems to develop at least 95 percent of the minimum ultimate breaking strength of the barrier cable strand and to comply with the requirements of PTI's Specification of Single Strand. Unbonded Tendons must be used at the termination of each barrier cable to attach the cable to its support member. The anchor (casting or machined barrel anchor) and the wedge is considered as one unit. Do not mix component parts from different manufacturers.

C. Barrier Cable Hardware and Embeds:

1. Encapsulated Anchors: Castings must be nonporous and free of sand, blow holes, voids, and other defects. Casting shapes are permitted to be rectangular square, or cylindrical with a conical hole designed to receive the matched tapered wedges. Use both the casting machined barrel anchors are in the same way and rate them to meet the load requirement specified. Cast or drill inserts into the support member. All inserts must meet the ultimate pull out and shear load requirements of the building code.

2. Provide galvanized hitch barriers as specified in Issued for Construction documents, mounted approximately 18 inches above finish floor to the center of the plate and centered on the stall to increase safety and protect the integrity of the barrier system.

D. Wedges:

1. Wedges are made from carbon steel bar and are hardened by heat treatment after the indentations are machined on the inside and is designed to penetrate and hold the barrier cable. The wedges must be under sufficient force to have the teeth engaged into the barrier cable to ensure proper working action of barrier cable systems. The procedures used to accomplish this task must never exceed the maximum lateral force allowed by the column. Zinc plate or galvanize wedges for corrosion resistance.

E. Bearing Plates:

1. Utilize a steel plate when required by design. See Section 05 12 00 - Structural Steel Framing for steel plate requirements. Adjust size and thickness to meet the design requirement.

F. Fabricated Structural Steel Members:

1. Design brackets or steel posts used as attachments to structural members to handle both the applied prestressing force and the forces resulting from design loads. Include the mechanical steel properties, ultimate pull out, and shear load ratings in the ultimate strength of such devices of the hardware and/or welds used in attaching the device to the supporting structural member.

2. Protect and treat the barrier system and all hardware from corrosion and such that their visibility is enhanced to patrons.

PART 3 - EXECUTION

3.01 INSTALLATION

A. Cast-In Barrel Anchors:

1. Stress cast-in and barrel anchors with a hydraulic stressing jack to provide the specified tension in the cable after all seating losses. Backstressing according to Article 3.01.D, herein, to assure proper wedge seating.

B. Installation of Barrier Cable Through Column:

1. At intermediate columns, provide sleeves ensuring a hole which is a minimum 1/8-inch diameter larger than the barrier cable diameter used (including coating material). The concrete contractor must locate spacing and position of the cables to match the dimensions given by the vehicular barrier cable shop drawings.

2. At the end columns, recess anchors in the column prior to concrete placement or bear against the column surface (barrel anchor type). The concrete contractor must install position, spacing and reinforcing defined in the shop drawings per the barrier cable system shop drawings.

C. Structural Steel Angles & Columns:

1. Where applicable, install structural steel support or anchoring angles on the face of the column. Locate these structural members far enough from the edge of the column so as not cause concrete spalling or cracking when the cables are stressed. Develop the connections to the column to the maximum design load for all the barrier cables at the location.

2. Where applicable, install structural steel support or anchoring columns as shown in the shop drawings. Position these structural members in the proper alignment to avoid kinks in the barrier strands. Anchor steel columns to the structure prior to cable installation.

D. Stressing Considerations:

1. The licensed design engineer to specify the minimum final effective force required (after back-stressing).

2. Stress all barrier cables to the stressing forces defined in the project approved shop drawings.

3. Back-stress all anchorages. Perform this back-stressing procedure after stressing the cable. Remove the jack after achieving and placing the initial tensioning force so that the jack nose is bearing on the opposite side of the bearing member. Then stress the cable at a force equal to 80 percent of the MUTS of the strand. In concrete applications, use a slotted plate or other special nose piece to prevent damage to the concrete.

E. Finishing of Anchor Recesses

1. Remove barrier cable tails within 1 inch from the face of the column using either an oxyacetylene torch, a metal cut off sawm a hydraulic shear, or a plasma cutting device. Do not perform this operation in rainy weather.

2. Fill anchor recessing with non-metallic non-shrink grout as soon as practical, with one continuous application. Do not use the grout containing chlorides or other chemicals known to be deleterious to the steel.

3. Prior to installing the grout, clean the inside recessed concrete surfaces to remove laitance or grease in order to enhance the bond of the grout.

3.02 ADJUSTING

A. Seat wedges initially at 80 percent MUTS into the barrel housing to ensure engagement of the wedge teeth into the barrier cable. The final force of the barrier cable is achieved mechanically through the threading adjustment at the stem of the anchoring device into the insert. Backstress the cable installed in these devices in accordance with Article 3.01.D, herein, either before or after the installation of the anchor.

3.03 FINAL INSPECTION & PROTECTION

A. At anchorage columns, seal the hold at the barrier cable that passes through a hole in the column to anchorage to prevent water from following a path of barrier cable to the anchorage unless the barrier cable slope prevents that from happening.

B. When cable tension is in question, perform tension verification by means of an approved cable tension gauge without removing or damaging the cables.

C. Sound Transit requires independent special inspection to ensure barrier cable system is installed in accordance with the Issued for Construction Documents and installation drawings. Special inspector must verify the conformance to the requirements of Article 2.01.B.2, herein, and Article 2.01.B.3, herein this specification. Special inspector must submit inspection report to Sound Transit.

END OF SECTION

SECTION 07 08 00

COMMISSIONING OF BUILDING ENCLOSURE

NOTE TO DESIGNER:

SECTIONS WITH BRACKETS. E.G., [TEXT] ARE TO BE MODIFIED OR DELETED IF NOT APPLICABLE. ITALICIZED TEXT PROVIDES INSTRUCTION TO THE DESIGNER TO INCLUDE LANGUAGE ON SPECIFIC TOPICS WHEN APPLICABLE. THE INSTRUCTIONS ARE TO BE DELETED WHEN THE SPECIFICATION IS FINALIZED. LANGUAGE NOT IN BRACKETS IS TO BE USED 'AS IS' WITHOUT MODIFICATION OR WITH AN APPROVED SPECIFICATION MODIFICATION REQUEST.

DESIGNER TO DELETE TEXT ABOVE FOR FINAL SECTION

PART 1 - GENERAL

1.01 SUMMARY

A. Section Includes:

1. Requirements for the commissioning process for Building Enclosure:

a. Level 1 commissioning process requirements for building enclosure at select mechanically conditioned rooms.

1) [List locations of mechanically conditioned room based on the facility design]

b. Support for Level 2 commissioning activities for Building Enclosure.

1.02 REFERENCES

A. This Section incorporates by reference the latest revisions of the following documents:

1. ASTM International (ASTM):

a. ASTM E779 Test Method for Determining Air Leakage Rate by Fan Pressurization.

B. Definitions:

1. See general commissioning requirements as stated in the Contract Documents for commissioning definitions.

1.03 COORDINATION

A. See general commissioning requirements as stated in the Contract Documents [Reference Section 01 91 13 – General Systems Testing and Commissioning Requirements if CM accepts] for general coordination requirements related to commissioning.

B. Coordinate amongst building trades, electrical trades and mechanical trades for completion of penetrations and readiness of room integrity. Performance of air barrier test to be coordinated based on function and requirements.

1.04 COMMISSIONING ACTIVITIES

A. Furnish labor and material to accomplish building commissioning as specified in general commissioning requirements as stated in the Contract Documents and in this specification, including:

1. Provide to the Testing and Commissioning Manager preliminary O&M information for use in developing commissioning test procedures.

2. Assist the Testing and Commissioning Manager in developing commissioning activity procedures and data forms submittals for work specified in this Section.

3. Provide information to the Testing and Commissioning Manager needed for control interface wiring diagrams submittals for the work of this Section.

4. Perform Level 1 commissioning activities specified in this Section, including installation verification, static tests, start-up tests, component tests, systems tests.

5. Operate equipment and system during commissioning activities as required by the Testing and Commissioning Manager.

6. Perform and document commissioning tests to verify readiness for commissioning test demonstration. Commissioning tests are specified in this specification.

7. Correct issues and repeat commissioning tests when results do not meet acceptance criteria.

8. Commissioning Test Demonstrations: General requirements for commissioning test demonstrations are specified in general commissioning requirements as stated in the Contract Documents:

   a. Repeat commissioning tests on a sample basis to demonstrate acceptable performance: Level 1 Component, Equipment, and System Commissioning Tests.

   b. Record and submit commissioning test demonstration data and issues.

   c. Correct issues and repeat commissioning test demonstration when results do not meet Acceptance Criteria.

9. Attend commissioning meetings as requested by the Testing and Commissioning Manager.

10. Report any inconsistencies or issues in system operations or performance.

11. Provide personnel to support commissioning test demonstration specified and as requested by the Testing and Commissioning Manager.

    a. In the event that a commissioning test demonstration fails, assist in determining the cause of failure. Make corrections as necessary.

B. Cooperate with Testing and Commissioning Manager to accomplish commissioning work on schedule and in coordination with other trades.

1.05 QUALITY ASSURANCE

A. Coordinate completion of Install Verification forms, by the Quality Control Inspector, as identified in the Contractors Quality Control Inspection and Test Plan.

PART 2 - PRODUCTS

2.01 TEST EQUIPMENT

A. Provide test equipment and instrumentation, including consumable supplies, required to execute commissioning activities. Unless noted otherwise, test equipment and instrumentation remain the property of the Contractor.

2.02 PROPRIETARY TEST INSTRUMENTS

A. Provide proprietary test instruments or tools required by the equipment manufacturer. Provide and operate the proprietary test instruments or tools as required for commissioning work.

PART 3 - EXECUTION

3.01 LEVEL 1 COMMISSIONING ACTIVITIES REQUIREMENTS

A. Level 1 commissioning activities scope: Technical requirements for commissioning of Equipment are specified in this specification.

B. Provide technicians, instrumentation, and tools to perform commissioning activities in accordance with accepted commissioning activity procedures at the direction of the Testing and Commissioning Manager.

C. Scope of Equipment commissioning activities applies to all portions of the installation described in the test. Where sampling is specified, it applies only to the commissioning test demonstration.

D. Upon approval of product submittals associated with the Technical requirements and the scope of Commissioning develop and submit for approval Install Verification Checklist forms for the quality criteria of the Work specified in this specification.

E. Preparation:

1. Certify that Equipment, subsystems, and equipment have been completed, calibrated, and started; and are operating in accordance with Contract Documents.

2. Testing Instrumentation: Install measuring instruments and logging devices to record test data in accordance with accepted commissioning test procedures as directed by the Commissioning Authority.

3. Certify that Equipment instrumentation and control systems have been completed and calibrated; are operating according to the Contract Documents; and that pretest set points have been recorded.

F. If tests cannot be completed because of a deficiency outside the scope of the Equipment system, document the deficiency and report it to Sound Transit. After deficiencies are resolved, reschedule tests.

G. Where seasonal testing is specified, complete appropriate initial commissioning tests and documentation within the Construction Period. Schedule and execute seasonal tests when specified conditions are expected.

3.02 LEVEL 1 COMMISSIONING ACTIVITY PROCEDURES

A. Submit level 1 commissioning activity test procedures and data forms for the following types of commissioning activities, requirements for which are specified in this specification.

1. Level 1 commissioning activities:

   a. Installation verification.

   b. System tests.

   c. [*Review identified IV's, E and S tests and add or modify as necessary based on location design for envelope systems]*

   d. Example checklists/test forms can be provided upon request.

3.03 LEVEL 1 INSTALLATION VERIFICATION REQUIREMENTS

A. Installation verification checklists are required for the following, minimum:

   1. Water and Air Barriers including those at mechanically conditioned rooms and rooms protected by chemical fire suppression identified to be tested under Articles 3.04.A, in this specification.

   2. Installation of doors and hardware complete

   3. Completion of conduit and duct installation

   4. Completion of joint and penetration firestopping systems

B. Installation verification checklist forms shall include the following:

   1. Organized to prompt the installer to check off quality criteria for each discrete portion of the Work.

   2. Identify the system or features to which the installation verification checklist applies at the top of the form.

   3. Section for verification of delivery of accepted materials.

   4. Section for verification that installation meets contract documentation and any special installation instructions by respective manufacturer.

   5. Space at the end of the form for the installer to print their name and company name, fill in the date, and sign or initial.

   6. Space at the end of the form for the Quality Control inspector designated for the scope to review and accept installation verification. QC Inspector must perform Install Verification and verify each element identified in form has been reviewed for conformance with contract documents and in accordance with the Contractors Quality Control Inspection and Test Plan as part of Section 01 45 00 - Quality Assurance/Quality Control.

   7. Space to identify the area of work for which the installer is executing the Installation Verification Checklist.

   8. Description of the quality criteria as it pertains to the specific work. Include a check-box for each criterion.

C. Quality Criteria: Installation verification checklists shall address the following quality criteria:

   1. Material matches accepted submittals and Contract Documents.

   2. Systems are installed without visible damage.

3. Location is as indicated on drawings.

4. Equipment is accessible for maintenance using safe work practices.

5. There is sufficient space to remove and replace components intact without demolishing other work.

6. Room construction is complete, providing a complete envelope for room and weather integrity.

7. Envelope construction is complete.

8. Door installation is complete.

9. Penetrations and sleeves for other trades are completed and have ducts or conduits installed.

10. Conduit or duct penetrations and sleeves have been appropriately sealed, proper application of firestop or closed off if unused to provide envelope integrity.

D. Fill out and sign installation verification checklists for Equipment while the Work is being installed. The intent is to fill out and sign the installation verification checklist as work proceeds to improve the quality of the installation. Retain completed installation verification checklists on site for review.

E. Before performing a commissioning test, installation verification checklists must be performed and completed by QC inspector designated for the appropriate area specified here in and within the Contractors Quality Control Inspection and Test Plan as part of Section 01 45 00 - Quality Assurance/Quality Control. Submit completed installation verification checklists for work included in the commissioning test.

3.04 LEVEL 1 INSTALLATION VERIFICATION

A. 0708-IV-01: Water and Air Barriers including those at mechanically conditioned rooms and rooms protected by chemical agents identified to meet room integrity tests. *[Designer: Reference a code sheet, drawing of conditioned rooms or provide as an appendix, a list of rooms to be tested]*.

1. [Designer: Identify water barrier applications, such as membranes, roofing etc. IV to serve as an ID to collate and collect Quality checks from various Division 07 specifications for the barrier to act as a complete system.]

2. [*Designer: Identify air barrier applications, wall material, finishes etc. IV to serve as an ID to collate and collect Quality checks from various Division 07 specifications for the barrier to act as a complete system*.]

B. 0708-IV-02: Completion of conduit and duct installation:

1. Penetrations and sleeves for all trades are completed and have ducts or conduits installed.

C. 0708-IV-03: Completion of joint and penetration firestopping systems per Contract Documents:

1. Conduit or duct penetrations and sleaves have been appropriately sealed, proper application of firestop or closed off if unused to provide envelope integrity.

D. [*Review identified IV's, E and S tests and add or modify as necessary based on location design for envelope systems. IV's and S test for Stations are typically conditioned rooms*

and rooms protected by dry chemical suppression agents that require room integrity. Consideration for LEED application and credits will also warrant identification of scope]

3.05 LEVEL 1 SYSTEM TESTS

A. 0708-S-01 Weather and Air Barrier Test:

1. System to be tested: Air barrier compliance testing as [required by the state or Seattle energy code dependent upon project] as specified in water and air barriers requirements as stated in the Contract Documents.[*Designer: Identify conditioned rooms subject to energy code or necessary for LEED credits]*

2. Test Method: ASTM E779:

a. Measure indoor and outdoor temperatures. If the difference between outdoor and indoor temperatures is too large, then the test shall not be performed due to the effects of the pressure difference.

b. Test pressure range must be from 25-80 Pa with the upper limit ≥50 Pa and the difference between the upper and lower limits ≥25 Pa. Room will be pressurized and depressurized (may also just use pressurization) gradually within the specified pressure range. Airflow and pressure differences will be measured periodically at pressure intervals of 5 to 10 Pa.

3. Acceptable Results:

a. Identified rooms shall be tested and the air leakage rate of the building envelope shall not exceed 0.40 cfm/ft^2 at a pressure differential of 0.4 inches water gauge (2.0L/s m^2 at 75 Pa) at the upper 95 percent confidence interval in accordance with ASTM E779 or an equivalent method approved by the code official.

b. If the tested rate exceeds that defined here, a visual inspection of the air barrier shall be conducted, and any leaks noted shall be sealed to the extent practicable and the test must be repeated. An additional report identifying the corrective actions taken to seal air leaks shall be submitted to the building owner after a minimum of 1 re-test and the code official and any further requirement to meet the leakage air rate may be waived (per AHJ Energy Code).

4. Report: Prepare a written report documenting the following information:

a. Building description, including location, address (street, city, state or province, zip or postal code, country, and elevation [above mean sea level in m (feet)].

b. Construction, including date built (estimate if unknown), floor areas for conditioned space, attic, basement, and crawl space, and volumes for conditioned spaces, attic, basement, and crawl space.

c. Condition of openings in building envelope including:

1) Doors, closed, locked or unlocked.

2) Windows, closed, latched or unlatched.

3) Ventilation openings, dampers closed or open.

4) Chimneys, dampers closed or open, and a

5) Statement whether the test zone is interconnected with at least door-sized openings. If not, the results of pressure measurements between portions of the zone.

d. HVAC system, including the location and sizes of ducts that penetrate the test zone envelope.

e. Procedure, including the test equipment used (manufacturer, model, serial number), and calibration records of all measuring equipment.

f. Measurement data, including:

1) Fan pressurization measurements (inside-outside zero flow building pressure differences); inside and outside temperature (at start and end of test) and the product of the absolute value of the indoor/outdoor air temperature difference multiplied by the building height; tabular list of all air leakage measurements and calculations: time, building pressure difference, air density, nominal airflow rate, fan airflow rate, and air leakage rate; and deviations from standard procedure.

2) Wind speed/direction and whether wind speed is estimated or measured on site. When measured on site, record the height above the ground at which wind speed was measured.

g. Calculations, including:

1) The leakage coefficient and pressure exponent for both pressurization and de-pressurization in accordance with ASTM E779.

2) The effective leakage areas for pressurization, depressurization, and combined. Report if a reference pressure other than 4 Pa is used; and

3) An estimate of the confidence limits in accordance with ASTM E779, Section 9.7.

3.06 LEVEL 1 AND LEVEL 2 TEST REQUIREMENTS MATRIX

	0708-IV-0X	**0708-S-0X**
Water and Air Barriers	X	
Installation of doors and hardware	X	
Completion of conduit and duct	X	
Completion of joint and penetration firestopping systems	X	
Weather and Air Barrier Test		X

[DESIGNER: ADD OR MODIFY MATRIX AS NECESSARY BASED ON TESTS ADDED OR MODIFIED ABOVE DEPENDING UPON THE LOCATION DESIGN FOR ENCLOSURE INTEGRITY]

END OF SECTION

EXHIBITS (On Proceeding Pages)

1. EXHIBIT A – Sample Test Form

EXHIBIT A – SAMPLE TEST FORM

SOUND TRANSIT PROJECT CONTRACT ##
IV-XX

First Test PASS Test Date: _____

Repeat Test FAIL

OBJECTIVES:

A. Verify that the building air and vapor barriers and details are installed per the manufacturer's installation instructions and design document details.

EQUIPMENT TO BE TESTED:

Equipment ID	Description
N/A	Building envelope air and vapor barrier systems

REFERENCE DOCUMENTS:

Document
Drawings:
Specification Sections: 08 44 13
Submittals:

TEST PRE-REQUISITES:

Activity	Notes	Completed?	
		Yes	No
None			
Notes: (1)			

MINIMUM PARTICIPANTS:

Participant	Notes	Required?	
		Yes	No
Installing contractor			
Sound Transit site quality inspector			
Notes: (1)			

REQUIRED INSTRUMENTATION AND EQUIPMENT:

Instrument or Equipment						Notes	Provided Instrumentation meets Requirements?	
Type or Sensed Parameter	Manufacturer	Model	Range	Accuracy	Calibration Date/ Next Cal. Due		Yes	No
None				±	/			

Notes:
(1)

CONDITIONS AT TIME OF TESTING:

AREA OF WORK:

Area in Which Work will be Conducted:
1st Floor back of house rooms, and 2nd, 3rd, and 4th floor electrical and mechanical rooms.
Notes: (1)

ISSUES DISCOVERED AND PROPOSED RESOLUTIONS:

No.	Issue	Proposed Resolution
Notes: (1)		

SIGNATURES:

Company	Printed Name	Signature	Date
Installing Contractor:			
Quality Control Inspector:			
Other Witness:			

INSTALLATION VERIFICATION CHECKLIST

Date:		ROOM ##	592L103	592L104	592L105	592L106	592L107	592L108	592L109	592L110	592L111
Pass?	Yes:										
	No:										
No.	Checklist Item:										
VERIFICATIONS DURING INSTALLATION											

1.1	Verify air and water vapor barrier systems are installed properly at the following rooms, per the manufacturer's installation directions.										
1.2	Verify air and water vapor barrier systems are installed properly per the design drawing specifications and drawings details.										
Notes: (1)											

END OF EXHIBITS

SECTION 07 19 10

WATER AND GRAFFITI REPELLENTS

PART 1 - GENERAL

1.01 SUMMARY

A. Section includes:

1. Requirements for surface preparation and application of the following:

a. Graffiti-resistant coatings to interior and exterior surfaces within the “touch zone”, and where specifically noted on the drawings.

1) For multi-coat systems, where the first coat(s) comprise the permanent water repellant, and subsequent coats are applied to achieve graffiti-repellent properties, the water repellant coat(s) are required for the full extent of the surface to be covered, and subsequent graffiti-repellant coats are required only for areas within the touch zone, or as otherwise indicated on the Issued for Construction Drawings, as allowed by the manufacturer.

2) For surfaces indicated to receive graffiti-resistant coating, as well as high performance coating or paint specified elsewhere in the Contract Documents: Provide a compatible anti-graffiti top coat.

b. Water repellents for interior and exterior wall surfaces.

c. Water repellent sealers for exterior traffic surfaces, and interior floor surfaces.

d. Water repellent pigmented sealers on concrete surfaces.

1.02 REFERENCES

A. This Section incorporates by reference the latest revisions of the following documents:

1. Washington Administration Code (WAC):

a. Chapter 173-490 WAC Emission Standards and Controls for Sources Emitting Volatile Organic Compounds (VOC).

2. Revised Code of Washington (RCW):

a. Chapter 70A.15 RCW Washington Clean Air Act.

3. American Society for Testing and Materials International (ASTM).

a. ASTM D6578 – Standard Practice for Determination of Graffiti Resistance.

b. ASTM E303 - Standard Test Method for Measuring Surface Frictional Properties Using the British Pendulum Tester.

1.03 SUBMITTALS

A. Submit:

1. Product Data: Provide product description. Include data substantiating that material is recommended by manufacturer for applications indicated.

2. Manufacturer's Installation Instructions: Indicate special procedures and conditions requiring special attention; cautionary procedures required during application.

3. Shop Drawings: Plan and Elevation drawings indicating extent and type of coating to be applied, including height of anti-graffiti coating where applied to partial-height walls. Indicate termination of sealers at construction and control joints and joints in masonry where applicable.

4. Written statement from manufacturer attesting to compatibility of the WGR coating and all substrates/ coatings applied to substrates:

   a. Include results of sample testing required by the manufacturer to demonstrate compatibility between previously untested substrates or coatings.

B. LEED Submittals:

1. Where LEED certification is required by the project, submit the same documentation for approval as required by GBCI as a project submittal. Highlight the relevant LEED information.

2. LEED documentation is to be submitted separately and titled LEED SUBMITTAL.

3. Building Product Disclosure and Optimization credit data: Submit data to support the LEED SUBMITTAL.

C. Transmit:

1. Field inspection reports.

2. Test results for Mock-ups indicating passing Pendulum Test Value per ASTM E 303, as defined in Article 2.1.

3. Qualifications:

   a. Applicator Qualification.

   b. Additional applicator Certification required by the manufacturer.

4. Maintenance Data: In addition to requirements stated elsewhere, include graffiti removal and cleaning instructions with written and video or digital medium showing cleaning procedure, including recommended proprietary products, and expected lifespan of permanent coatings.

5. Warranties: Samples of each manufacturer's warranties.

D. LEED Submittals:

1. Where LEED certification is required by the project, submit the same documentation for approval as required by GBCI as a project submittal. Highlight the relevant LEED information.

2. LEED documentation is to be submitted separately and titled LEED SUBMITTAL.

3. Building Product Disclosure and Optimization credit data: Submit data to support the LEED SUBMITTAL.

1.04 QUALITY ASSURANCE

A. Applicator's Qualifications: Company specializing in performing the work of this Section approved by manufacturer, and employing experienced persons trained and approved by repellent manufacturer for application of materials and issuance of special warranty.

B. Mock-ups:

1. Prepare representative surfaces 6 feet by 6 feet in size using specified materials. (Concrete – Vertical and Horizontal, Painted Metal Panel, Stainless Steel Panel, Brick, Painted Steel, and CMU).

2. Demonstrate preparation and application of repellents and coatings on each type of surface, identical to those to be coated, to establish standards for workmanship and aesthetic effects:

a. Indicate surface preparation procedures, coverage rates, application methods equipment.

1) Allow graffiti-resistant coatings to dry for one week or for amount of time recommended by manufacturer prior to testing of adhesion. If adhesion is poor, light abrasion of the surface or other methods recommended by the manufacturer may be necessary before reapplying coating and retesting adhesion.

b. Notify Resident Engineer, 24 hours in advance of graffiti removal tests.

c. Apply spray paint, permanent marker, lipstick, and grease. Allow applied markings to set for a minimum of 24 hours before removal attempts.

d. Demonstrate materials and methods to be employed for the removal of the above on graffiti-resistant coatings.

e. Cleaned surface of graffiti-resistant coatings shall be undamaged, and free of “shadows,” “ghosts” or similar defects in appearance.

3. Locate mock-ups where directed by Resident Engineer:

4. Slip Resistance: Test horizontal surface mock-ups after application of sealers to demonstrate a Pendulum Test Value (PTV) as listed in 2.1.4 per ASTM E303. For surfaces not meeting the required results, consult with manufacturer for remedial requirements, and correct mock-up until a passing result is achieved.

5. Approved mock-ups may remain as part of the Work as determined by the Resident Engineer.

1.05 DELIVERY, STORAGE, AND HANDLING

A. Deliver materials to site in sealed, original, labeled containers bearing manufacturer's name, type of material, brand name, and instructions for mixing. Store materials off-ground, and under cover. Conform to additional manufacturer’s written instructions regarding storage and handling of materials.

B. The Resident Engineer reserves the right to inspect the containers prior to their opening, to review accompanying bills of lading, and to reject materials in opened containers.

1.06 PROJECT CONDITIONS

A. Weather and Substrate Conditions: Do not proceed with application of repellents and coatings when the following conditions exist, unless otherwise indicated in manufacturer's written instructions:

1. Ambient temperature is less than 40 degrees Fahrenheit or above 100 degrees Fahrenheit.

2. When rain or temperatures below 40 degrees Fahrenheit are predicted for a period of 24 hours, or earlier than three (3) days after surfaces become wet from rainfall or other moisture sources.

3. When substrate is frozen, or at surface temperature of less than 40 degrees Fahrenheit.

4. When winds are sufficient to carry airborne chemicals to unprotected surfaces or adjacent properties or would cause an improper application rate.

1.07 WARRANTY

A. Special Warranty: Two years for Graffiti-Resistant Coatings.

PART 2 - PRODUCTS

2.01 PERFORMANCE REQUIREMENTS

A. GENERAL

1. Compatibility: Repellent and coating materials shall be compatible with substrate surfaces and other materials they are in contact with.

2. Maximum VOC Content: Comply with Washington State Air Quality Rules and Laws, Chapter 173-490 WAC Emission Standards and Controls for Sources Emitting Volatile Organic Compounds (VOC), Chapter 70A.15 RCW Washington Clean Air Act, and LEED requirements, whichever is more stringent.

3. Graffiti-Resistance: Minimum Level 6, minimum 25 cycles without loss of repellency per ASTM D 6578.

4. Slip Resistance: Sealers applied to walking and vehicular traffic surfaces must demonstrate tested wet pendulum test values (hard rubber slider) Tested in accordance with ASTM E 303 of the following:

a. Parking garage decks (interior): 36.

b. Parking garage decks (exterior): 45.

c. Loading Docks or vehicle maintenance areas: 55.

d. Ramped and sloped surfaces: 55.

e. Other surfaces not listed: Min 36.

B. WGR-1: Non-Sacrificial Graffiti-Resistant and Water Repellent for Interior and Exterior Concrete and Masonry Walls.

1. Description: RTV Silicone resin based, penetrating type, 15 percent solids content: maximum 250 g/L VOC content, colorless:

a. Acceptable Manufacturers: Subject to compliance with requirements provide products from one of the following:

1) ProSoCo, Inc.

2) Master Builder's Solutions.

3) Professional Products of Kansas, Inc.

4) Sherwin-Williams.

C. WGR-2: Non-sacrificial graffiti-resistant topcoat for application over surfaces with painting or coating systems specified elsewhere in the Contract Documents:

1. Use of proposed WGR-2 topcoat shall be approved in writing by the base coating manufacturer.

2. Follow the manufacturer's recommendations for scheduling of WGR-2 application to ensure the base coating system has cured and will accept application of topcoat without adverse effects to adhesion or performance of either coating.

3. Provide written confirmation of compatibility demonstrated through field tests and mock-ups as required elsewhere in this section.

a. Acceptable formulations, include:

1) Single component, Polysiloxane, high solids Maximum VOC <250 g/L.

2) Silane, penetrating type, Min 40 percent alkylalkoxysilane, Maximum VOC 50g/L.

3) Polyurethane, high solids, Maximum VOC 100g/L.

b. Acceptable manufacturers, Subject to compliance with requirements provide products from one of the following:

1) PPG.

2) Sherwin-Williams.

3) Prosoco, Inc.

4) Evonik.

5) Master Builder's Solutions.

D. WGR-3: Water Repellent for Precast Concrete Pavers, exposed, Concrete and Concrete Masonry Walls, Concrete Decks:

1. Description: Clear, modified silane /siloxane penetrating solution; low volatility, containing 100 percent alkytrialkoxysilanes; maximum 400 g/L VOC content. Traffic-bearing where subject to vehicle traffic:

a. Abrasion resistance, mg lost; (ASTM D 4060) 48 — system passes Max: 50 CS-17 Wheel, 1,000 g load, 1,000 cycles.

2. Acceptable Products:

a. ProSoCo Inc.

b. Sherwin-Williams.

c. Laticrete International.

d. Master Builder's Solutions.

E. WGR-4: Water Repellent for Concrete floors below-grade and slab on grade:

1. Description: Clear, Silane, penetrating water repellent, containing 100 percent alkoxysilanes; maximum 400 g/L VOC content. Vehicular-Traffic Bearing:

a. Abrasion resistance, mg lost; (ASTM D 4060) 48 — system passes Max: 50 CS-17 Wheel, 1,000 g load, 1,000 cycles.

b. Acceptable Manufacturers: Subject to compliance with requirements provide products from one of the following:

c. ProSoCo, Inc.

d. Laticrete International: Aquapel.

e. Master Builder's Solutions.

f. Sika.

F. WGR-5: Vehicular traffic coating for parking garage decks and ramps, primary entrances, and closure strips:

1. Description: Cold fluid-applied elastomeric crack-bridging traffic-bearing coating system, 100 percent solids by volume, maximum VOC Content 400 g/L.

a. Meet requirements of ASTM C957.

b. Abrasion resistance, mg lost; (ASTM D 4060) CS-17 Wheel, 1,000 g load, 1,000 cycles: Max 16 mg.

c. Include primer and reinforcing fabric and texture top coat or integral texture as required by manufacturer to meet wear and slip-resistance requirements.

2. Ensure compatibility between WGR-4 and joint/crack sealants used in accordance with other divisions of the specifications:

a. Acceptable Manufacturers: Subject to compliance with requirements provide products from one of the following.

b. SIKA.

c. Sherwin Williams.

d. Master Builder's Solutions.

G. WGR-6: Water-Repellent Pigmented Sealer for Concrete:

1. On guideway concrete walls, piers, columns, abutments and MSE walls, superstructure at Station areas, TPSS basement walls, and other concrete elements indicated on the Issued for Construction Drawings:

a. Comply with WSDOT Standard Specifications for Road, Bridge, and Municipal Construction, Section 9-08.3 Pigmented Sealer Materials for Coating of Concrete Surfaces.

b. Color: Washington Gray.

c. Acceptable Products: Per WSDOT Qualified Products List.

2. Parking Garage Concrete Vertical wall and column surfaces:

a. Methyl methacrylate-ethyl acrylate, semi-opaque co-polymer resign-based sealer.

b. Color selected by ST.

c. Acceptable Products:

1) Basis of Design: Sherwin Williams: DOT sealer 100.

2) Other products complying with WSDOT Standard Specifications Section 9-08.3.

d. Apply compatible WGR-2, anti-graffiti topcoat to vertical surfaces full height:

1) WGR-2 top coat shall be approved in writing by WGR-5 manufacturer. Compatibility demonstrated through field tests and mock-ups as required elsewhere in this section.

2) Follow the manufacturer's recommendations for scheduling of top-coat application to ensure pigmented sealer has cured and will accept application of top-coat without adverse effects to adhesion or performance of either coating.

PART 3 - EXECUTION

3.01 EXAMINATION

A. Verify existing conditions before starting work, including:

1. Joint sealants are installed and fully cured.

2. Masonry mortar is cured a minimum of 60 days.

3. Surfaces to be coated are dry, clean, and free of efflorescence, oil, or other material detrimental to performance of work.

B. Inspect surfaces in presence of repellent manufacturer's authorized technical representative and Applicator.

C. Do not proceed with treatment application until unsatisfactory conditions have been corrected.

D. Concrete Substrates: Cure a minimum of 28 days. Where required by the manufacturer, test concrete for moisture vapor emission values in accordance with manufacturer's instructions,

3.02 PREPARATION

A. Clean surfaces of dirt, oils, efflorescence, mildew staining, and other contaminants in accordance with manufacturer's written instructions.

B. Test surfaces for moisture content in accordance with manufacturer's written instructions. Allow damp or wet surfaces to dry.

C. Remove contaminants using methods acceptable to repellent manufacturer and Resident Engineer.

D. Notification Prior to Final Application: Notify Resident Engineer at least 24 hours in advance of performing work to witness final application. Clearly mark panels, which have received test applications.

E. Protection of Surfaces:

1. Protect adjoining work from spillage or overspray of repellents. Cover adjoining and nearby surfaces of aluminum, glass and planting where there is possibility of graffiti-resistant coatings being deposited on surfaces. Cover surface mounted items.

2. Clean treatments from unintended surfaces immediately after spillage or overspray. Comply with manufacturer's recommendations for cleaning. Cleaning materials and methods employed shall be such so as not to damage surfaces and permanent finishes.

3.03 WATER AND GRAFFITI REPELLENT APPLICATION

A. Apply repellents in accordance with manufacturer's directions.

B. Test each surface and/or material to be treated to ensure compatibility and desired water and graffiti-resistant treatment results. The surface to be treated must be clean and free of all foreign matter and as dry as possible to ensure proper penetration of water and graffiti-resistant treatment.

C. Ensure thorough saturation of porous surfaces of concrete and similar surfaces. Do not dilute or alter materials.

D. Apply repellents at coverage rates and in number of coats determined on test applications.

E. Apply treatment evenly until surfaces are fully wet, starting at the bottom and working up with a 6 to 8 inches rundown below the contact point of the spray pattern, unless otherwise recommended by repellent manufacturer.

F. Finished surface to be even, uniform in texture and appearance and free of runs and drips.

G. Use brushes or rollers where spray method may damage adjacent surfaces.

3.04 FIELD QUALITY CONTROL

A. Manufacturer's Field Services: Engaged repellent manufacturer's factory-trained, authorized technical representative to perform field inspections and tests:

1. Arrange for Resident Engineer and Applicator to be present during tests.

2. Prior to preparing mock-ups, obtain and test samples required by the manufacturer for previously untested substrates or for evaluation for compatibility with other coatings in accordance with warranty requirements.

3. Tests: Determine suitable application to each type of substrates before installation. Review substrate conditions, surface preparation procedures, coverage rates, application methods equipment. Notify Resident Engineer, 24 hours in advance of tests.

4. Inspections during Application: Representative to be present during first day of application and periodically as recommended by manufacturer to ensure compliance of quality of execution of manufacturer's written instructions.:

   a. Review exposed substrates prior to application.

5. Prepare and submit inspection test reports, coordinated in accordance with warranties.

3.05 CLEANING

A. Remove and dispose of masking and protective materials.

B. Remove over spray from adjacent surfaces with cleaner as recommended by the repellent manufacturer without damage to surfaces.

3.06 PROTECTION

A. Protect treated surfaces from traffic, rain, and other surface water in accordance with repellent manufacturer’s written instructions.

END OF SECTION

SECTION 07 92 00

JOINT SEALANTS

PART 1 - GENERAL

1.01 SUMMARY

A. Section includes:

1. Requirements for sealant and backing materials for sealing of joints in construction. In general this includes, but is not limited to, the following:

a. All locations noted on Issued for Construction Drawings as sealant or caulking, excluding joint fillers indicated by 03 15 00 – Concrete Accessories.

b. Penetrations in exterior metal wall panel systems.

c. Perimeter joints between exterior metal wall panel systems and door frames, aluminum windows, or louvers.

d. Horizontal/Vertical architectural control, construction, isolation, and expansion and contraction joints.

e. Perimeter joints between interior wall surfaces and frames of doors or windows.

f. Tape for isolation and gasketing as indicated.

g. As required for continuous Weather Air Barrier at penetrations of exterior walls.

1.02 REFERENCES

A. This Section incorporates by reference the latest revisions of the following documents:

1. Fenestration and Glazing Industry Alliance (FGIA/AAMA) AAMA 800 - Voluntary Specifications and Test Methods for Sealants.

2. American Society for Testing and Materials International (ASTM):

a. ASTM C834 - Standard Specification for Latex Sealants

b. ASTM C920 - Specification for Elastomeric Joint Sealants.

c. ASTM C1193 - Standard Guide for use of Joint Sealants.

d. ASTM C1311 - Standard Specification for Solvent Release Sealants.

e. ASTM C1330 - Standard Specification for Cylindrical Sealant Backing for Use with Cold Liquid-Applied Sealants.

f. ASTM C1521 - Standard Practice for Evaluating Adhesion of Installed Weatherproofing Sealant Joints.

g. ASTM E84 - Standard Test Method for Surface Burning Characteristics of Building Materials.

3. South Coast Air Quality Management District (SCAQMD):

a. SCAQMD Rule 1168 - Adhesive and Sealant Applications, with Amendments.

4. Underwriters Laboratories Inc. (UL):

a. UL 94 HF-1 - Measure of a material's flammability or burning time before self-extinguishment (burning stops within 2 seconds; afterglow less than 30s; no burning drips allowed).

1.03 SUBMITTALS

A. Submit:

1. Sealant Schedule: Identify areas of use by each product submitted according with Sealant Schedule in this Section:

a. Product Data: Submit manufacturer's technical datasheets for each product to be used; include the following:Physical characteristics, including movement capability, VOC content, hardness, cure time, and color availability.

1) List of backing materials approved for use with the specific product.

2) Substrates that product is known to satisfactorily adhere to and with which it is compatible.

3) Substrates the product should not be used on.

4) Substrates for which use of primer is required.

5) Substrates for which laboratory adhesion and/or compatibility testing is required.

6) Installation instructions, including precautions, limitations, and recommended backing materials and tools.

7) Sample product warranty.

8) Certification by manufacturer indicating that product complies with specification requirements.

2. Samples for Initial Selection: Submit initial color samples in the form of manufacturer's bead samples consisting of strips of actual products showing full range of colors available for each product.

3. Material Certification: Submit written certification from sealant manufacturer stating that materials forming joint substrates and joint backings (e.g., concrete, fluoropolymer coatings) have been tested for compatibility and adhesion with proposed joint sealants and are suitable for the use intended as specified; certification shall state that proposed sealant has been tested for non-staining characteristics when applied to precast concrete. Include recommendations for primers and substrate preparation needed to obtain adhesion.

4. Adhesion Test Log: Submit sample of test log containing requirements listed in Article 3.04, herein.

B. LEED Submittals:

1. Where LEED certification is required by the project, submit the same documentation for approval as required by GBCI as a project submittal. Highlight the relevant LEED information.

2. LEED documentation is to be submitted separately and titled LEED SUBMITTAL.

3. Building Product Disclosure and Optimization credit data: Submit data to support the LEED SUBMITTAL.

1.04 QUALITY ASSURANCE

A. Single Source Responsibility: Obtain joint sealant materials for each application from a single manufacturer.

B. Sealant Certification: Submit written certification from sealant manufacturer stating that materials forming joint substrates and joint backings (e.g., concrete, fluoropolymer coatings) have been tested for compatibility and adhesion with proposed joint sealants and are suitable for the use intended as specified; certification shall state that proposed sealant has been tested for non-staining characteristics when applied to precast concrete. Include recommendations for primers and substrate preparation needed to obtain adhesion.

C. Preconstruction Compatibility and Adhesion Testing: Prior to installation of joint sealants, field test their adhesion to joint substrates of each type encountered and determine if priming and other specific joint preparation techniques are required. Perform tests under normal environmental conditions that will exist during actual installation in accordance with Field Quality Control requirements in this section. Schedule sufficient time for testing and analysis of results to prevent delay in the progress of the Work.

1.05 PROJECT CONDITIONS

A. Environmental Conditions: Do not proceed with installation of joint sealants under the following conditions:

1. Ambient and substrate temperature conditions are outside the limits permitted by joint sealant manufacturer.

2. Joint substrates are wet due to rain, condensation, or other causes.

3. Joint Width Conditions: Do not proceed with installation of joint sealant when joint widths are less than or larger than allowed by joint sealant manufacturer for application indicated.

4. Joint Substrate Conditions: Do not proceed with installation of joint sealants until contaminants capable of interfering with their adhesion are removed from joint substrates.

1.06 WARRANTY

A. Special Installer's Warranty: Installer agrees to repair or replace joint sealants that do not comply with performance and other requirements specified in this Section within specified warranty period.

B. Verify available warranties and warranty periods for joint-sealant installation.

1. Warranty Period: Two (2) years from date of Acceptance.

C. Special Manufacturer's Warranty: Manufacturer agrees to furnish joint sealants to repair or replace those joint sealants that do not comply with performance and other requirements specified in this Section within specified warranty period.

D. Verify available warranties and warranty periods for joint sealants:

1. Warranty Period: Five (5) years from date of Acceptance.

PART 2 - PRODUCTS

2.01 MATERIALS

A. Compatibility: Provide joint sealants, joint fillers, and other related materials that are compatible with one another and with joint substrates under conditions of service and application, as demonstrated by sealant manufacturer based on testing and field experience.

B. Color And Texture Criteria (Exterior Exposed to View Locations): Unless noted otherwise provide color of joint sealant selected from manufacturer's standard colors to match adjacent colors, as selected by Architect.

1. At Color Coated (PVDF) Aluminum Framing: Provide custom color to match the Resident Engineer's approved (PVDF) color sample.

2. Sealants (Type B) used in horizontal applications shall match adjacent material color.

C. Surface Burning Characteristics: All materials used within the building envelope must meet Smoke developed index of 450 or less, and flame spread index of 25 or less, Class A, when tested in accordance with ASTM E84.

D. Sealants used within the building envelope shall comply with low VOC limits found in SCAQMD Rule 1168.

2.02 PRODUCTS

A. Sealants:

1. Type "A" Sealant: One-part, neutral-cure silicone elastomeric sealant meeting requirements of ASTM C920, Type S, Grade NS, Class 25 minimum. Include primer required for porous substrates as required by manufacturer:

a. Application: Exposed exterior vertical and horizontal joints not subject to foot or vehicle traffic.

b. Acceptable products include:

1) Dow Corning "DOWSIL 795/790 Building Sealant".

2) General Electric "Silglaze SSG4000".

3) Tremco "Spectrem 2".

4) or approved equal.

2. Type "B" Sealant: Self-leveling 2-part elastomeric urethane meeting requirements of ASTM C920, Type M, Grade P, Class 25 minimum, Use T. Include primer required for porous substrates as required by manufacturer:

a. Application: Interior and exterior horizontal joints subject to foot or vehicle traffic.

b. Acceptable products include:

1) SIKA USA, Sikaflex-2c SL.

2) BASF “MasterSeal SL 2”.

3) BASF “MasterSeal NP2”.

4) Tremco “Vulkem 445SSL”.

5) Or approved equal.

3. Type "C" Sealant: Silyl-terminated polyether (STPe) or polyurethane (STPu) elastomeric sealant conforming to requirements of ASTM C920, Type S, Grade NS, Class 50 minimum. Include primer required for porous substrates as required by manufacturer:

a. Applications: Metal to metal open joints, either back groove or top of surface mounted flashing, exposed to weather, and for bedding thresholds and brake formed flashings.

b. Acceptable products include:

1) BASF "Sonolastic 150 VLM"

2) Henry Company "HE925 - BES Sealant"

3) Pecora Corporation, “DynaTrol I-XL Hybrid”

4) Or Accepted Equal

4. Type "D" Sealant: One part paintable acrylic latex sealant complying with requirements of ASTM C834, type OP:

a. Applications: Low-movement, interior joints not subject to traffic, and not in wet areas:

1) Joints in gypsum drywall, concrete, and masonry.

2) Wall and ceiling control joints at non- fire rated non-acoustic conditions.

3) Other interior joints for which no other type of sealant is indicated.

b. Acceptable products include:

1) Pecora Chemical Corporation "AC-20 + Silicone".

2) Tremco "Tremflex 834".

3) Sherwin-Williams “850A”.

4) or approved equal.

5. Type "E" Sealant: One part mildew resistant silicone sealant complying with requirements of ASTM C920, Type S, Grade NS, Class 25 minimum:

a. Applications: Interior joints in wet areas (perimeter of countertops with sinks, restrooms, and shower areas).

b. Acceptable products include:

1) Dow Corning "Dowsil 786 Silicone Sealant".

2) General Electric "SCS1702".

3) Pecora Corporation “898 Sanitary Mildew Resistant Silicone Sealant”.

4) or approved equal.

6. Type "F Series" Sealants: Non-curing, non-hardening, synthetic rubber sealer, recommended for use by manufacturer where concealed joints are subject to changes in temperature, water and vibration.

a. Type "F-1": Tape consistency, solvent-free, butyl-based sealant with a solids content of 100 percent; meeting the requirements of AAMA 804.1-85 (as described in AAMA 800). Packaged in rolls with release paper backing:

1) Acceptable products include:

a) Tremco "440 Tape".

b) Pecora, "Extru-Seal".

c) C.R. Laurence Butyl Architectural Glazing Tape.

d) Or approved equal.

2) Applications: Exterior metal to metal, and dissimilar materials, compression joints subject to shear.

b. Type "F-2": Mastic consistency, one-part non-drying, non-hardening, non-bleeding and permanently resilient butyl sealant, meeting or exceeding ASTM C1311, AAMA 809.2 (as described in AAMA 800):

1) Acceptable products include:

a) SIKA ‘SikaLastomer 511”.

b) Pecora, “BA-98”.

c) Tremco “TremPro JS-773+t”.

d) Or approved equal.

2) Applications: Exterior metal to metal laps, concealed compression joints, door thresholds, bottom of steel stud tracks.

a) For sealing of steel stud tracks in acoustical and fire-rated applications, refer to Section 09 21 16 - Gypsum Board Assemblies.

B. Secondary Seal:

1. Application: Compression seal to provide watertight secondary seal and resist air pressure differential behind primary sealant and backer-rod at elevator hoistway joints.

2. Refer to Drawings for size of joint.

3. Acceptable Products include:

a. Emseal, Backerseal or accepted equal.

C. Tapes:

1. PVC Tape (Type "H"): closed cell PVC foam tape with self-adhesive backing.

a. Typical application: Gasket/sealant to reduce air movement, acoustical and vibration isolation and between dissimilar materials and elsewhere indicated.

b. Basis of design: Saint Gobain “Norseal V740”, or approved equal.

D. Compression Seal:

1. Expanding Foam Tape (Type “J”): self-expanding polyurethane foam impregnated with modified acrylic flame retarding polymer meeting UL 94 HF-1 (Self-Extinguishing).

2. Typical application: For joints on exterior concrete and masonry envelope and secondary seal for interior side of window to WAB.

3. Acceptable Products Include:

a. Tremco Willseal 600/600S.

b. Bosig “Combband 600”.

c. Approved Equal.

E. Acoustic and Fire-Rated Sealant: Refer to Section 09 21 16 - Gypsum Board Assemblies.

2.03 ACCESSORIES

A. Plastic Foam Backer Rod: ASTM C1330. Preformed compressible, resilient, non-waxing, non-extruding foam, of size, shape and density to suit various conditions and control sealant depth and width. Provide open or closed cell as recommended by sealant manufacturer.

B. Backer rod type recommended for compatible with sealant by sealant manufacturer, and of type which does not cause staining or discoloration of joint based on field experience and laboratory testing.

C. Sizes as recommended by sealant manufacturer, with diameter never less than 30 percent greater than width of joint.

D. Bond Breaker Tape: Polyethylene tape or other plastic tape as recommended by sealant manufacturer for preventing bond between sealant and back surface of joint. Provide self-adhesive tape wherever applicable.

E. Primer: Provide type recommended by joint sealer manufacturer where required for adhesion of sealant to joint substrates indicated.

F. Cleaners for Nonporous Surfaces: Provide non-staining, chemical cleaner of type acceptable to manufacturer of sealant and sealant backing materials, which are not harmful to substrates and adjacent nonporous materials, and which do not leave oily residues or otherwise have a detrimental effect on sealant adhesion or in-service performance.

PART 3 - EXECUTION

3.01 EXAMINATION

A. Examine joints indicated to receive joint sealants, with Installer present, for compliance with requirements for joint configuration, installation tolerances and other conditions affecting joint sealant performance. Do not proceed with joint sealer work until unsatisfactory conditions have been corrected.

3.02 PREPARATION

A. Cleaning of Joints: Clean joints immediately before installing joint sealers to comply with recommendations of joint sealer manufacturers and the following requirements:

B. Remove protective films from metal surfaces. Clean metal, glass, and other nonporous surfaces by chemical cleaners or other means which are not harmful to substrates or leave residues capable of interfering with adhesion of joint sealants.

C. Jointing Priming: Prime joint substrates where recommended by joint sealer manufacturer based on preconstruction compatibility and adhesion testing or prior experience. Apply primer undiluted in uniform coating over surface. Confine primers to areas of joint sealer bond; do not allow spillage or migration onto adjoining surfaces.

D. Masking Tape: Apply masking tape around joints where required to prevent contact of sealant with adjoining surfaces which otherwise would be stained or damaged by such contact or by cleaning methods required to remove sealant smears. Remove tape immediately after tooling without disturbing joint seal.

3.03 SEALANT APPLICATION

A. General: Comply with joint sealer manufacturer's printed installation instructions applicable to products and applications indicated, except where more stringent requirements apply.

B. Installation Standards: Comply with recommendations of ASTM C1193 for use of joint sealants as applicable to materials, applications and conditions indicated.

C. Installation of Sealant Backings:

1. Install backer rods in all butt type joints receiving sealant where depth of joint exceeds manufacturer's recommendations. Install joint filler using a blunt tool or plain faced roller. Do not puncture, stretch, or twist joint fillers.

2. Do not leave gaps between ends of joint fillers. Remove joint fillers that become wet prior to sealant application and replace with dry material.

3. Generally, install joint fillers to achieve width-to-depth ratio as recommended by sealant manufacturer. Where depth of joint is not sufficient to require joint filler, install bond breaker tape to cover full width and length of joint cavity to prevent three sided adhesion.

D. Joint Width: Width-to-depth ratio of sealant as recommended by sealant manufacturer. Do not exceed a depth of 1/2 inch when joint is 1/2 inch wide; joints exceeding 1/2 inch in width shall not exceed 1/4 inch in depth.

E. Mixing: Mix two component sealant in accordance with manufacturer's directions using premeasured units. Do not thin or adulterate sealant in any way.

F. Installation of Sealants: Apply sealant over backing to uniform thickness in continuous beads, filling all joints and voids solid; superficial pointing with skim bead will not be accepted. Use nozzle of proper size to completely fill the joints.

G. Tooling of Nonsag Sealants: Immediately after sealant application and prior to time skinning or curing begins, tool sealants to form smooth, uniform beads, free of air pockets; ensure contact and adhesion of sealant with sides of joint. Remove excess sealants from surfaces adjacent to joint:

1. Provide concave joint configuration, unless noted otherwise.

2. Do not use tooling agents which discolor sealants or adjacent surfaces or are not approved by sealant manufacturer.

H. Pourable sealants shall be applied by gun or by pouring, filling the joint completely with a slight recessed finish. Additional material shall be added if low spots develop. Seal along outside slab edges of joints to prevent water from entering cavity formed by backer rod.

3.04 FIELD QUALITY CONTROL

A. Field Testing and Inspection: Perform field test of joint sealant in accordance with test recommended in ASTM C1521: Standard Practice for Evaluating Adhesion of Installed Weatherproofing Sealant Joints, except as modified below:

1. All testing to be witnessed by Resident Engineer or designated representative.

2. Extent of Testing: Test sealant joints as follows:

a. Perform single test for each type of sealant and joint substrate for each responsible contractor.

b. Test joints to be 5 feet long.

c. Allow sealants to cure fully before testing.

3. Test Method: Test joint sealants by hand-pull method described below:

a. Make knife cuts from one side of joint to the other, followed by two cuts approximately 2 inches long at sides of joint and meeting cross cut at one end. Place a mark 1 inch from cross-cut end of 2-inch piece.

b. Use fingers to grasp 2-inch piece of sealant between cross-cut end and 1-inch mark; pull firmly at a 90-degree angle or more in direction of side cuts while holding a ruler alongside of sealant. Pull sealant out of joint to the distance recommended by sealant manufacturer for testing adhesive capability, but not less than that equaling specified maximum movement capability in extension; hold this position for 10 seconds.

c. For joints with dissimilar substrates, check adhesion to each substrate separately by extending cut along one side, checking adhesion to opposite side, and then repeating this procedure for opposite side.

B. Inspect joints for complete fill, for absence of voids, and for joint configuration complying with specified requirements. Record results in a field adhesion test log.

1. Inspect tested joints and report on the following:

a. Whether sealants in joints connected to pulled-out portion failed to adhere to joint substrates or tore cohesively. Include data on pull distance used to test each type of product and joint substrate. Compare these results to determine if adhesion passes sealant manufacturer's field- adhesion hand-pull test criteria.

b. Whether sealants filled joint cavities and are free from voids.

c. Whether sealant dimensions and configurations comply with specified requirements.

C. Record test results in a field adhesion test log. Include dates when sealants were installed, names of persons who installed sealants, test dates, test locations, whether joints were primed, adhesion results and percent elongations, sealant fill, sealant configuration, and sealant dimensions.

D. Repair sealants pulled from test area by applying new sealants following same procedures used to originally seal joints. Ensure that original sealant surfaces are clean and new sealant contacts original sealant.

E. Evaluation of Field-Test Results: Sealants not evidencing adhesive failure from testing or noncompliance with other indicated requirements, will be considered satisfactory. Remove sealants that fail to adhere to joint substrates during testing or to comply with other requirements. Retest failed applications until test results prove sealants comply with indicated requirements.

3.05 CLEANING

A. Clean off excess sealants or sealant smears adjacent to joints as the Work progresses by methods and with cleaning materials approved in writing by manufacturers of joint sealants and of products in which joints occur.

END OF SECTION

SECTION 08 08 00

COMMISSIONING OF OPENINGS

NOTE TO DESIGNER:

SECTIONS WITH BRACKETS. E.G., {TEXT} ARE TO BE MODIFIED OR DELETED IF NOT APPLICABLE. ITALICIZED TEXT PROVIDES INSTRUCTION TO THE DESIGNER TO INCLUDE LANGUAGE ON SPECIFIC TOPICS WHEN APPLICABLE. THE INSTRUCTIONS ARE TO BE DELETED WHEN THE SPECIFICATION IS FINALIZED. LANGUAGE NOT IN BRACKETS IS TO BE USED 'AS IS' WITHOUT MODIFICATION OR WITH AN APPROVED SPECIFICATION MODIFICATION REQUEST.

DESIGNER TO DELETE TEXT ABOVE FOR FINAL SECTION

PART 1 - GENERAL

1.01 SUMMARY

A. Section Includes:

1. Requirements for commissioning process for Openings:

a. Level 1 commissioning activities for Openings.

b. Level 2 commissioning activities for Openings.

c. Support for Level 3 commissioning activities related to Openings.

d. Support for Level 4 commissioning activities related to Openings.

1.02 REFERENCES

A. Definitions

1. Definitions: See general commissioning requirements as stated in the Contract Documents for commissioning definitions.

2. Systems, Equipment, and Components: Where these terms are used together or separately, they shall mean "as-built" systems, equipment, and components.

1.03 COORDINATION

A. See general commissioning requirements as stated in the Contract Documents for general coordination requirements related to commissioning.

B. Coordinate completion of Install Verification forms, by the Quality Control Inspector, as identified in the Contractors Quality Control Inspection and Test Plan.

1.04 COMMISSIONING ACTIVITIES

A. Furnish labor and material to accomplish building commissioning as specified as part of general commissioning requirements as stated in the Contract Documents, and including, but not limited to:

1. Provide to the Testing and Commissioning Manager Preliminary O&M information for use in developing commissioning test procedures.

2. Assist the Testing and Commissioning Manager in developing commissioning activity procedures and data forms for work specified in this Section.

3. Provide information to the Testing and Commissioning Manager needed for Control Interface Wiring Diagrams for the work of this Section.

4. Perform Level 1 and Level 2 commissioning activities specified in this Section, including installation verification, static tests, start-up tests, component tests, and systems tests, and intrastation system interface tests.

5. Provide support for Level 3 commissioning activities, including jointly with the communications system contractor field testing points in the interface terminal strips, being present during Level 3 testing with adequate labor and support personnel to adjust equipment and troubleshoot system failures that might arise. When material or equipment provided by this Division is found to be in conflict with specified criteria, adjust or replace said material or equipment, with the assistance of manufacturer as needed.

6. Operate equipment and system during Commissioning Tests and Commissioning Test Demonstration indicated.

7. Perform and document Commissioning Tests indicated to verify readiness for Commissioning Test Demonstration.

8. Correct issues and repeat Commissioning Tests when results do not meet Acceptance Criteria.

9. Commissioning Test Demonstrations: General requirements for commissioning test demonstrations are specified in general commissioning requirements as stated in the Contract Documents:

    a. Repeat commissioning tests on a sample basis to demonstrate acceptable performance: Level 1 Component, Equipment, and System Commissioning Tests.

    b. Record and submit commissioning test demonstration data and issues.

    c. Correct issues and repeat commissioning test demonstration when results do not meet Acceptance Criteria.

10. Attend commissioning meetings as requested by the Testing and Commissioning Manager before and during testing indicated.

11. Report any inconsistencies or issues in system operations or performance.

12. Provide personnel to support Commissioning Test Verification indicated, as requested by the Testing and Commissioning Manager.

13. In the event that a Commissioning Test Demonstration fails, assist in determining the cause of failure. Make corrections as necessary.

B. Cooperate with Testing and Commissioning Manager to accomplish commissioning work on schedule and in coordination with other trades.

1.05 QUALITY ASSURANCE

A. Coordinate completion of Install Verification forms, by the Quality Control Inspector, as identified in the Contractors Quality Control Inspection and Test Plan.

PART 2 - PRODUCTS

2.01 TEST EQUIPMENT

A. Provide test equipment and instrumentation, including consumable supplies, required to execute commissioning activities. Unless otherwise indicated, test equipment and instrumentation remain the property of the Contractor.

PART 3 - EXECUTION

3.01 LEVEL 1 COMMISSIONING ACTIVITIES REQUIREMENTS

A. Level 1 commissioning activities scope: Technical requirements for commissioning of Equipment are specified in this specification.

B. Provide technicians, instrumentation, and tools to perform commissioning activities in accordance with accepted commissioning activity procedures at the direction of the Testing and Commissioning Manager.

C. Scope of Equipment commissioning activities applies to all portions of the installation described in the test. Where sampling is specified, it applies only to the commissioning test demonstration.

D. Upon approval of product submittals associated with Technical requirements and the scope of Commissioning, develop and submit for approval Install Verification Checklist forms for the quality criteria of the Work indicated.

E. Preparation:

1. Certify that Equipment, subsystems, and equipment have been completed, calibrated, and started; and are operating in accordance with Contract Documents.

2. Testing Instrumentation: Install measuring instruments and logging devices to record test data in accordance with accepted commissioning test procedures as directed by the Commissioning Authority.

3. Certify that Equipment instrumentation and control systems have been completed and calibrated; are operating according to the Contract Documents; and that pretest set points have been recorded.

F. Test all operating modes, interlocks, control responses to abnormal or emergency conditions, and verify proper response of building automation system controllers and sensors.

G. Perform tests using design conditions wherever possible. If tests cannot be completed because of a deficiency outside the scope of the Equipment system, document the deficiency and report it to Sound Transit. After deficiencies are resolved, reschedule tests.

H. Simulated conditions may need to be imposed using an artificial load when it is not practical to test under design conditions. Provide equipment to simulate loads. Set simulated conditions in accordance with accepted commissioning test procedures as directed by the

Testing and Commissioning Manager. Document simulated conditions and methods of simulation. After tests, return settings to normal operating conditions.

I. Request approval to alter set points when simulating conditions is not practical. Request approval to alter sensor values with a signal generator when design or simulating conditions and altering set points are not practical.

J. Where seasonal testing is specified, complete appropriate initial commissioning tests and documentation within the Construction Period. Schedule and execute seasonal tests when specified conditions are expected.

3.02 LEVEL 1 AND LEVEL 2 COMMISSIONING ACTIVITY PROCEDURES

A. Submit Level 1 commissioning activity test procedures and data forms for the following types of commissioning activities, requirements for which are specified in this specification:

1. Level 1 commissioning activities:

a. Installation verification.

b. Start-up.

c. System tests.

2. Level 2 commissioning activities:

a. Intra-station system interface tests.

3. Example checklists/test forms can be provided upon request.

3.03 LEVEL 1 INSTALLATION VERIFICATION CHECKLIST REQUIREMENTS

A. Scope: Installation verification requirements to the following:

1. Access Doors and Panels.

2. Overhead Coiling Grilles and Vertical Lift Doors.

3. Hollow Metal Doors and Frames.

4. Door Hardware.

5. Fire Key Boxes.

B. Installation Verification Checklist Forms: Include the following:

1. Organized to prompt the installer to check off quality criteria for each discrete portion of the Work.

2. Identify the system or features to which the Installation Verification Checklist applies at the top of the form.

3. Section for verification, and condition of delivery of approved materials.

4. Section for verification that installation meets contract documentation and any special installation instructions by respective manufacturer.

5. Space at the end of the form for the Quality Control inspector designated for the scope to review and accept installation verification. QC Inspector must perform Install Verification and verify each element identified in form has been reviewed for conformance with contract documents and in accordance with the Contractors

Quality Control Inspection and Test Plan as part of Section 01 45 00 - Quality Assurance/Quality Control.

6. Space at the end of the form for the installer to print their name and company name, fill in the date, and sign or initial.

7. Space to identify the area of work for which the installer is executing the Installation Verification Checklist.

8. Description of the quality criteria as it pertains to the specific work. Include a check box for each criterion.

C. Quality Criteria: Installation Verification Checklists: Include the following checkable items:

1. Make and model match approved submittals.

2. Equipment is installed without visible damage.

3. Location is as indicated on drawings.

4. Equipment is accessible for maintenance using safe work practices.

5. There is sufficient space to remove and replace components intact without demolishing other work.

D. Fill out and sign installation verification checklists for Equipment while the Work is being installed. The intent is to fill out and sign the installation verification checklist as work proceeds to improve the quality of the installation. Retain completed installation verification checklists on site for review.

E. Before performing a commissioning test, installation verification checklists must be performed and completed by QC inspector designated for the appropriate area specified here in and within the Contractors Quality Control Inspection and Test Plan as part of Section 01 45 00 - Quality Assurance/Quality Control. Submit completed installation verification checklists for work included in the commissioning test.

3.04 LEVEL 1 INSTALLATION VERIFICATION

A. Provide installation verification checklists for the following, as a minimum requirement:

1. 0808-IV-01 Access Doors and Panels, including, but not limited to, as required:

a. Fire rating.

b. Cylinders and keying.

2. 0808-IV-02 Overhead Coiling Grilles or Vertical Lift Doors, including, but not limited to:

a. Electric operators and drives, including maintenance access.

b. Cylinders and keying.

c. Fit and alignment.

d. Wiring preparation.

3. 0808-IV-03 Hollow Metal Doors and Frames, including, but not limited to, as required:

a. Hardware and wiring preparation.

b. Thermal resistance.

c. Fire rating.

d. Smoke and draft rating.

e. Grouting.

f. Adjustment.

4. 0808-IV-04 Door and Gate Hardware, including, but not limited to:

a. Marking, packaging, and secure storage of delivered hardware.

b. Cylinders and keying.

c. Electrified locksets.

d. Exit devices.

e. Door closers.

f. Gasketing and thresholds.

g. Key boxes.

h. Installation in accordance with Contract Documents.

i. Installation in accordance with approved submittals, including wiring diagrams, operational descriptions, elevation drawings, and connector configurations.

j. Auxiliary components listed in door hardware requirements as stated in the Contract Documents.

5. 0808-IV-05 Fire-Rated Openings:

a. Installation in accordance with certification(s) of compliance with applicable provisions of UL10C Standard for Positive Pressure Fire Tests of Door Assemblies.

3.05 LEVEL 1 START-UP REQUIREMENTS

A. 0808-SU-01: Overhead Coiling Grilles or Vertical Lift Doors:

1. System/Equipment to be Tested:

a. Overhead coiling grilles in accordance with overhead coiling grilles as stated in the Contract Documents.

2. Functions to be Tested:

a. Start-up of overhead coiling grilles.

3. Conditions of the Test:

a. Verify installation and perform startup of overhead coiling grilles in accordance with manufacturer's written installation and startup procedures.

b. Manufacturer-approved personnel shall start-up units in accordance with manufacturer's written procedures. Record results on manufacturer's approved forms.

4. Acceptable Results:

a. Documented acceptable installation and startup in accordance with overhead coiling grilles manufacturer's written installation and startup procedures.

B. 0808-SU-02: Door Hardware:

1. System/Equipment to be Tested:

a. Door Hardware, in accordance with requirements as stated in the Contract Documents.

2. Functions to be Tested:

a. Adjusting, cleaning and demonstrating door hardware.

3. Conditions of the Test:

a. Verify installation and perform adjustment and cleaning in accordance with manufacturer's written installation and startup procedures.

b. An experienced hardware installer shall start-up units per manufacturer's written procedures. Record results on manufacturers approved forms.

c. Adjust door control devices to compensate for final operation of heating and ventilating equipment under normal and emergency operating conditions.

d. Verify the fail-safe or fail secure operation of the hardware for each side of the opening.

4. Acceptable Results:

a. Documented acceptable installation and startup in accordance with door hardware manufacturer's written installation and startup procedures.

b. Documented acceptable operation under normal and emergency operating conditions in accordance with Contract Documents and requirements of authority having jurisdiction.

3.06 LEVEL 1 SYSTEM TESTING REQUIREMENTS

A. 0808-S-01: Overhead Coiling Grilles and Doors or Vertical Lift Doors:

1. System/Equipment to be Tested:

a. Overhead coiling grilles in accordance with overhead coiling grilles as stated in the Contract Documents.

2. Functions to be Tested:

a. Opening and closing of units in manual (simulated power outage) and automatic operation.

b. Unit edge safety function.

c. [Egress functions.]

[Designer: If grille/door is provided with emergency button to override controls and open, include validation of emergency button.]

3. Conditions of the Test:

a. Begin the test with the unit closed.

b. Use the unit control system to fully open the grille.

c. Use the unit control system to partially close the grille.

d. Use the unit control system to fully close the grille.

e. Disconnect power from the unit operator. Manually open and close the unit.

f. Restore power to the unit operator. Use the unit control system to partially open the unit.

g. Place an obstruction in the path of the closing unit. Use the grille control system to attempt to fully close the unit.

h. Remove the obstruction from the path of the closing unit. Use the grille or door control system to attempt to fully close the unit.

i. [Where fire alarm and egress functions are provided, initiate a signal for the fire alarm or actuate the egress hardware to attempt to allow passage through the opening under those condition*s.]*

j. [Designer: Confirm fire alarm operation and emergency response with ST and modify Conditions to reflect intended functionality.]

4. Acceptable Results:

a. Unit fits securely and evenly against the jamb and against the floor without gaps.

b. Unit opens fully, moving smoothly and quietly without abnormal vibration.

c. Unit closes to the partial position desired, moving smoothly and quietly without abnormal vibration. Unit stays in the partially closed position until commanded otherwise.

d. Unit closes fully, moving smoothly and quietly without abnormal vibration.

e. Unit operates with moderate effort by one person.

f. Unit opens to the partial position desired, moving smoothly and quietly without abnormal vibration. Unit stays in the partially open position until commanded otherwise.

g. When the unit encounters the obstruction, the unit stops and reverses direction immediately.

h. Unit closes fully, moving smoothly and quietly without abnormal vibration.

i. [Unit opens/releases, as required per fire alarm interface input signal or egress requirements.]

j. *Designer: Confirm fire alarm operation and emergency response with ST and modify Conditions to reflect intended functionality.]*

B. 0808-S-02: Door Closing and Latching:

1. System/Equipment to be Tested:

a. Door and gate locking devices in accordance with requirements as stated in the Contract Documents.

b. Door closers in accordance with requirements as stated in the Contract Documents.

2. Functions to be Tested:

a. Backcheck

b. Closing

c. Latching

d. Latch release

3. Conditions of the Test:

a. For each condition below, perform the following:

1) Open door or gate the full range of travel, moving the door as quickly and forcefully as possible by a strong person.

2) Open door or gate and release to close unassisted. Open to 45 degrees, 70 degrees and full open. Measure the time to close from 90 degrees to 12 degrees from latching.

4. Acceptable Results:

a. Under all conditions, backcheck feature of closer prevents the door from impacting the stop with excess force.

b. Under all conditions, door or gate closes from 90 degrees open to 12 degrees from full closed in not less than 5 seconds.

c. Under all conditions, door closes and latches securely without excessive impact to door frame or mullion.

C. 0808-S-03: Door Operating Force:

1. System/Equipment to be Tested:

a. Accessible path and public facing doors and gates in accordance with requirements as stated in the Contract Documents.

2. Functions to be Tested:

a. Door or gate operating force.

3. Conditions of the Test:

a. Normal ventilation operation: Open door or gate from push side while measuring door operating force.

b. Normal ventilation operation: Open door or gate from pull side while measuring door operating force.

4. Acceptable Results:

a. Under normal conditions, interior door operating force complies with provisions of the Americans with Disabilities Act that require a maximum door opening force, as measured directly above the lock, of 5 pounds.

b. Under normal conditions, exterior and fire door operating force complies with provisions of the Americans with Disabilities Act that require a

maximum door opening force, as measured directly above the lock, of 8.5 pounds.

c. Under all conditions, Closure from 70 degrees open to a point 3 inches from the latch shall take at least 3 seconds.

3.07 LEVEL 2 INTRA-STATION SYSTEM INTERFACE TESTS

A. 0808-IS-01: Interfaces of Overhead Coiling Grilles and Doors or Vertical Lift Doors:

1. System/Equipment to be Tested:

a. Interfacing status and control of overhead coiling grilles in accordance with overhead coiling grilles as stated in the Contract Documents.

2. Functions to be Tested:

a. Remote permissive control and opening and closing of units from interfacing system:

1) Access Control System (ACS).

2) Building Management System (BMS).

3) [Fire Alarm Response].

4) [*Designer: Confirm fire alarm operation and emergency response with ST and modify Conditions to reflect intended functionality].*

3. Conditions of the Test:

a. Begin the test with the unit closed.

b. Swipe a valid access card and use the unit control system to fully open the grille.

c. Swipe a valid access card and use the unit control system to partially close the grille.

d. Swipe a valid access card and use the unit control system to fully close the grille.

e. Use the BMS and command to fully open the grille.

f. Use the BMS to partially close the grille.

g. Use the BMSE to fully close the grille.

h. [Where fire alarm and egress functions are provided, initiate a signal for the fire alarm or actuate the egress hardware to attempt to allow passage through the opening under those conditio*ns.]*

i. [Designer: Confirm fire alarm operation and emergency response with ST and modify Conditions to reflect intended functionality.]

4. Acceptable Results:

a. Unit opens fully, moving smoothly and quietly without abnormal vibration.

b. Unit closes to the partial position desired, moving smoothly and quietly without abnormal vibration. Unit stays in the partially closed position until commanded otherwise.

c. Unit closes fully, moving smoothly and quietly without abnormal vibration.

d. [Unit opens/releases, as required per fire alarm interface input signal or egress requirements.]

e. *Designer: Confirm fire alarm operation and emergency response with ST and modify Conditions to reflect intended functionality.]*

B. [0808-IS-02: Stairwell and Smoke Control Door Operating Force [*Designer: Due to Pressure Difference, remove for non-tunnel stations or segments without tunnels*]:]

1. [System/Equipment to be Tested:]

a. [Doors in accordance with requirements as stated in the Contract Documents.]:

1) Stair access doors.

2) Stair discharge doors.

3) Smoke control separation doors.

4) Tunnel cross passage doors.

5) [Designer: Shall evaluate doors subject to pressure differential that results from emergency ventilation or pressurization and adjust list accordingly.]

2. [Functions to be Tested:]

a. [Door operating force.]

3. [Conditions of the Test:]

a. [Emergency ventilation and/or stairwell pressurization operation: Open door or gate from push side while measuring door operating force.]

b. [Emergency ventilation operation: Open door or gate from pull side while measuring door operating force.]

4. [Acceptable Results:]

a. [Under emergency conditions, exterior and fire door operating force measures a maximum door opening force, as measured directly above the opening device (handle, push bar, etc.) of 15 pounds to release latch and 30 pounds to start swing of door.]

b. [[Under emergency conditions, tunnel cross passage door operating force measures a maximum door opening force, as measured directly above the opening device (handle, push bar, etc.) of 25 pounds to release latch and 50 pounds to start swing of door.

C. 0808-IS-03: Sequence of Operation [Security Group A]

1. System/Equipment to be Tested:

a. Door Hardware [associated with Security Group A] in accordance with requirements as stated in the Contract Documents.[*Designer: to identify specific hardware sets from Section 08 71 00 – Door Hardware associated with Security Group A or ensure that Hardware Sets specified can be clearly identified with Security Groups identified in Table 801-4 of STDRM].*

b. Security monitoring system interface.

2. Functions to be Tested:

a. Sequence of operation as follows:

1) Normally locked on pull side.

2) Free egress at all times from push side. [*Designer: Test can be used for panic hardware or latch].*

3) Door position switch (DPS) signals security system when either leaf is open.

4) Card reader momentarily unlocks electronic mortise exit device (active leaf) and shunts DPS signal.

5) Request to exit (REX) switch in electronic mortise exit device push rail (both leaves) momentarily shunts DPS signal.

3. Conditions of the Test:

a. Prerequisites: Door hardware installed and fully operational. Security system interface installed and fully operational.

b. Attempt to open door from secure side.

c. Use invalid card to attempt to exit from secure side.

d. Use valid card to exit from secure side.

e. Activate push rail or latch in each leaf exit device. [*Designer: Test can serve single or bi-parting doors].*

f. Allow door to close without latching, then open door.

g. Repeat steps c. and d. while fire alarm system is in alarm.

4. Acceptable Results:

a. Prerequisites complete.

b. Pull side normally locked.

c. Invalid card read does not unlock door.

d. Valid card read unlocks secure side active leaf exit device and shunts door position signal.

e. Activation of request to exit switch in either leaf exit device push rail shunts door position signal.

f. Door alarm annunciated at security monitoring system.

g. Push side free egress under all conditions.

D. 0808-IS-04: Sequence of Operation [Security Group B]

1. System/Equipment to be Tested:

a. Door Hardware [associated with Security Group B] in accordance with requirements as stated in the Contract Documents.[*Designer: to identify specific hardware sets from Section 08 71 00 – Door Hardware associated with Security Group B or ensure that Hardware Sets specified can be clearly identified with Security Groups identified in Table 801-4 of STDRM]*

b. Security monitoring system interface

2. Functions to be Tested:

a. Sequence of operation as follows:

1) Local alarmed exit device sounds when door is open from "push" side unless card reader is used to momentarily shunt alarm.

2) Lever trim on "pull" side momentarily shunts alarm and retracts alarmed exit device latchbolt.

3) Door position switch (DPS) sends signal to security monitoring system when door is open.

3. Conditions of the Test:

a. Prerequisites: Door hardware installed and fully operational. Security system interface installed and fully operational.

b. Attempt to open door from push side without using valid access card.

c. Use valid access card to exit from push side.

d. Use lever trim on pull side to open door.

e. Allow door to close without latching, then open door.

4. Acceptable Results:

a. Prerequisites complete.

b. Local alarmed device sounds when door is opened from push side without use of valid access card. DPS sends signal to security monitoring system.

c. Valid access card read momentarily shunts local audible alarm. DPS sends signal to security monitoring system.

d. Activation of lever trim shunts door position signal and retracts local alarmed exit device latchbolt. DPS sends signal to security monitoring system.

e. Door alarm annunciated at security monitoring system.

f. Push side free egress under all conditions.

E. 0808-IS-05: Sequence of Operation [Security Group C]

1. System/Equipment to be Tested:

a. Gate hardware [associated with Security Group C] in accordance with requirements as stated in the Contract Documents.[*Designer: to identify specific hardware sets from Section 08 71 00 – Door Hardware associated with Security Group C or ensure that Hardware Sets specified can be*

clearly identified with Security Groups identified in Table 801-4 of STDRM].

b. Security monitoring system interface.

2. Functions to be Tested:

a. Sequence of operation as follows:

1) Free egress at all times from either side.

2) Gate position switch (DPS) signals security system when gate is open.

3) Card reader momentarily shunts DPS signal.

3. Conditions of the Test:

a. Attempt to open gate from non-public side without use of valid access card.

b. Attempt to open gate from non-public side by using valid access card. DPS signals security system when door is open.

c. Attempt to open gate from public side without use of valid access card. DPS signals security system when gate is open.

d. Attempt to open gate from public side using an invalid card.

e. Attempt to open gate from public side by using valid access card. DPS signals security system when gate is open.

4. Acceptable Results:

a. Use of paddle handle opens gate.

b. Door alarm annunciated at security monitoring system.

c. Card reader shunts DPS signal.

d. Acceptable results same as a. through d.

F. 0808-IS-06: Sequence of Operation [Security Group D]:

1. System/Equipment to be Tested:

a. Door Hardware [associated with Security Group D] in accordance with requirements as stated in the Contract Documents.[*Designer: to identify specific hardware sets from Section 08 71 00 – Door Hardware associated with Security Group D or ensure that Hardware Sets specified can be clearly identified with Security Groups identified in Table 801-4 of STDRM].*

b. Security monitoring system interface

2. Functions to be Tested:

a. Sequence of operation as follows:

1) Door position switch (DPS) sends signal to security monitoring system when door is open.

2) Conditions of the Test:

3) Open and close door with system in normal mode.

3. Acceptable Results:

a. Security monitoring system shows correct door position under all conditions.

G. [0808-IS-06: Sequence of Operation [Security Group E]]:

1. System/Equipment to be Tested:

a. Door Hardware [associated with Security Group E] in accordance with requirements as stated in the Contract Documents. [*Designer: to remove if cross passages are not part of contract. If part of contract identify specific hardware sets from Section 08 71 00 – Door Hardware associated with Security Group E or ensure that Hardware Sets specified can be clearly identified with Security Groups identified in Table 801-4 of STDRM].*

b. Security monitoring system interface.

2. Functions to be Tested:

a. Sequence of operation as follows:

1) Door position switch (DPS) sends signal to security monitoring system when door is open.

2) Local visible strobe is activated.

3) Visible strobe is deactivated.

3. Conditions of the Test:

a. Open and close door with system in normal mode.

4. Acceptable Results:

a. Security monitoring system shows correct door position under all conditions:

1) Local visible strobe is activated for time specified in contract documents. If not indicated, confirm with ST Operations and LRV operator training.

2) Visible strobe shuts off after set time of door closed and DPS contact.

H. [0808-IS-07: Sequence of Operation [Security Group L]]

1. System/Equipment to be Tested:

a. Door Hardware [associated with Security Group L] in accordance with requirements as stated in the Contract Documents. [*Designer: Remove if facility does not have public Restrooms. Designer to identify specific hardware sets from Section 08 71 00 – Door Hardware associated with Security Group L or ensure that Hardware Sets specified can be clearly identified with Security Groups identified in Table 801-4 of STDRM. Coordinate with CCTV and Access Control design*].

b. Security monitoring system interface.

2. Functions to be Tested:

a. Sequence of operation as follows:

1) Normally locked on pull side with electronic lock device.

2) Free egress at all times from push side.

3) Door position switch (DPS) signals security system when either door is open.

4) Occupancy Sensor indicates occupant and controls lighting and fan.

5) Deadbolt provides local and remote visual indication of occupancy.

6) Card reader momentarily unlocks electronic lock device.

7) Video request phone is used for requesting access.

8) Remote unlock is provided by Security Operations Center (SOC) and Access Control System.

3. Conditions of the Test:

a. Prerequisites: Door hardware installed and fully operational. Security system interface installed and fully operational.

b. Attempt to open door from secure side.

c. Use invalid card to attempt to exit from secure side.

d. Use valid card to exit from secure side.

e. Confirm occupancy, activate deadbolt, de-activate deadbolt and activate latch exit device.

f. Utilize video request phone to request access.

4. Acceptable Results:

a. Prerequisites complete.

b. Pull side normally locked.

c. Invalid card read does not unlock door.

d. Valid card read unlocks secure side.

e. Occupancy sensor activates light and fan. Deadbolt activation is reported to Access Control System and visual indication of Occupied is provided on exterior. De-activation of deadbolt and latch allow exit.

f. Video Request phone allows SOC to view requester and remotely unlock door.

I. [0808-IS-0X: Sequence of Operation [identify hardware group from Section 08 71 00 – Door Hardware or security group from Security Group A in Table 801-4 not included above and develop sequence and testing parameters]:

1. System/Equipment to be Tested:

a. Door Hardware Sets [Designer identified] in accordance with requirements as stated in the Contract Documents.

b. Security monitoring system interface.

2. Functions to be Tested:

a. Sequence of operation as follows:

1) [Designer to develop sequence of operations].

3. Conditions of the Test:

a. [Designer to develop conditions of the test].

4. Acceptable Results:

a. [Designer to develop Acceptable Results].

3.08 LEVEL 3 INTER-STATION SYSTEM INTERFACE TEST REQUIREMENTS

A. Support Level 3 testing to ensure the correct exchange of signals between the equipment supplied by others and integration with existing head end systems, including:

1. The BMS software and TCN network at LCC, and the Access Control System equipment provided for the Stations under this Contract.

2. The software and network at SOC, and the Access Control System equipment provided for the Stations and Parking Garages under this Contract.

B. Level 3 Test Support: During the Level 3 testing period, must be coordinated with Sound Transit, and the team of Transit Systems within Operations. Provide adequate personnel to adjust equipment and troubleshoot system failures that might arise. Support Level 3 tests with the assistance from Contractor, Construction Management, External Systems Contractors, Operations, and the final design consultant. Systems will be tested together during Level 3 Testing to ensure proper functionality, inter-operability, and reliability of systems necessary for operation.

C. Provide copies of all settings and terminal wiring to Sound Transit – Transit Systems and the [Access Control Systems contractor] to confirm and validate the interface to SOC.

D. When a piece of Contractor provided equipment is found to be in conflict with specific criteria, have an experienced representative of the manufacturer make an adjustment to the item. If adjustments fail to correct the operation of a piece of equipment or fixture, remove the equipment or fixture from the Contract site and replace it with a workable replacement that will meet the specification requirements.]

LEVEL 1 AND LEVEL 2 TEST REQUIREMENTS MATRIX

	0808-IV-XX	**0808-SU-XX**	**0808-S-XX**	**0808-IS-XX**
Access Doors and Panels	X			
Overhead Coiling Grilles or Vertical Lift Doors	X	X	X	X
Hollow Metal Doors and Frames	X			
Door and Gate Hardware	X	X		
Fire-Rated Openings	X			
Door Closing and Latching			X	
Door Operating Force			X	
Stairwell and Smoke Control Door Operating Force				X
Sequence of Operation Security Group A				X
Sequence of Operation Security Group B				X
Sequence of Operation Security Group C				X
Sequence of Operation Security Group D				X
Sequence of Operation Security Group E				X
Sequence of Operation Security Group L				X

[DESIGNER: ADD OR MODIFY MATRIX AS NECESSARY BASED ON TESTS ADDED OR MODIFIED ABOVE DEPENDING UPON THE LOCATION DESIGN FOR OPENINGS]

END OF SECTION

EXHIBITS (On Proceeding Pages)

1. EXHIBIT A – Sample Test Form

EXHIBIT A – SAMPLE TEST FORM

☐ First Test ☐ PASS Test Date: _____

☐ Repeat Test ☐ FAIL _____

☐ Demonstrated Test

OBJECTIVES:

A. Verify that the sequence of operation for the Hardware Group 2.0 per the design requirements.

EQUIPMENT TO BE TESTED:

Equipment ID	Description
592L104A	Doors with Group 2.0 hardware sets.

REFERENCE DOCUMENTS:

Document
Drawings:
Specification Sections: 087100
Submittals:

TEST PRE-REQUISITES:

Activity	Notes	Completed?	
		Yes	No
0808-IV-03 – Hollow Metal Doors and Frames		☐	☐
0808-IV-04 – Door and Gate Hardware		☐	☐
0808-SU-02 – Door Hardware		☐	☐
0808-S-02 – Door Closing and Latching		☐	☐
0808-S-03 – Door Opening Force		☐	☐
Notes: (1)			

MINIMUM PARTICIPANTS:

Participant	Notes	Required?	
		Yes	No
Installing contractor		☒	☐
Sound Transit site quality inspector		☐	☐
Commissioning Authority		☒	☐

Notes:
(1)

REQUIRED INSTRUMENTATION AND EQUIPMENT:

Instrument or Equipment						Notes	Provided Instrumentation meets Requirements?	
Type or Sensed Parameter	Manufacturer	Model	Range	Accuracy	Calibration Date/ Next Cal. Due		Yes	No
None				±	/		☐	☐
Notes: (1)								

CONDITIONS AT TIME OF TESTING:

AREA OF WORK:

Area in Which Work will be Conducted:
Parking Garage
Notes: (1)

ISSUES DISCOVERED AND PROPOSED RESOLUTIONS:

No.	Issue	Proposed Resolution
Notes: (1)		

SIGNATURES:

Company	Printed Name	Signature	Date
Installing Contractor:			

ST Witness:			
Other Witness:			

SEQUENCE OF OPERATION TEST CHECKLIST

	Date:											
	Pass? Yes:	☐	☐	☐	☐	☐	☐	☐	☐	☐	☐	☐
	Pass? No:	☐	☐	☐	☐	☐	☐	☐	☐	☐	☐	☐
No.	Checklist Item:	592L 104A	Door ID#									
1.1	<u>Attempt to Open from Secure Side without Key or Access Card</u>: Normally locked on pull side. Start with door leafs both closed and attempt to open the door (active leaf) from the secure side. Verify: • Both door leafs door remains closed and locked. • Access control system indicates both leafs closed.											
1.2	<u>Open Active Leaf with a Key from Secure Side</u>: Verify: • Door deadbolt can be unlocked via the key lock cylinder on the active leaf, allowing the secure side door handle to operate and the user to open the active leaf. • The backstop device limits the maximum open position of the active leaf correctly. • The inactive leaf remains closed when the active leaf is initially opened, being kept close by the top retractable rods on the inactive leaf. • Access control system indicates that the active leaf is open when it is not in the closed position.											

1.3	<u>Open Inactive Leaf from Secure Side:</u> Verify: • When the active leaf is initially open, the bottom retractable rod unlatches automatically but the top retractable rod remains engaged, keeping the active leaf closed. • A button on the top retractable rod hardware allows the operator to unlatch the top rod and open the inactive leaf. • The Overhead stop device limits the maximum open position of the inactive leaf correctly. • Access control system indicates that the inactive leaf is open when it is not in the closed position.											
1.4	<u>Open the Active Leaf from the Non-Secure Side</u>: With both leafs closed, operate the door handle from the non-secure side of the active leaf. Verify: • The non secure side door handle operates and unlatches the mortise latch as well simultaneously retracts the deadbolt to allow the active leaf to open and allow free passage through the active leaf. • The door closer on the active leaf automatically closes the active leaf and the door latches closed when passage is complete, and the active leaf is released. • The inactive leaf remains closed.											
1.5	<u>Attempt to Open from Secure Side with Invalid Access Card</u>: Verify: • The card reader reads the invalid access control card but does not unlock the electric locking mechanism. • The door cannot be opened.											
1.6	<u>Open the Active Leaf from the Secure Side with Valid Access Card</u>: Verify: • The card reader reads the valid access control card and temporarily unlocks the electric locking mechanism. • The active leaf can be opened. • When the active leaf is released, after opening, the door closer closes the door and the door latches on its strike.											

	• The access control automatically relocks the electric locking mechanism when the door is closed.											

Notes:

(1)

END OF EXHIBITS

SECTION 08 11 13

HOLLOW METAL DOORS AND FRAMES

PART 1 - GENERAL.

1.01 SUMMARY

A. Section includes:

1. Requirements for the following:

a. Non-fire-rated steel doors and frames.

b. Fire-rated steel doors and frames.

c. Thermally insulated steel doors.

d. Acoustic-rated steel doors.

e. Steel doors with perforated metal infill panel.

f. Ballistic-rated steel doors.

g. Accessories, including glazing (see other section) and matching panels.

1.02 REFERENCES

A. This Section incorporates by reference the latest revision of the following documents:

1. American National Standards Institute (ANSI), International Code Council (ICC), Steel Door Institute (SDI):

a. ANSI/ICC A117.1 - American National Standard for Accessible and Usable Buildings and Facilities; International Code Council.

b. ANSI/BHMA A156.115 – Hardware Preparation In Steel Doors And Steel Frames.

c. ANSI/SDI A250.6 – Recommended Practice for Hardware Reinforcing on Standard Steel Doors and Frames.

d. ANSI A250.8 - SDI-100 Specifications for Standard Steel Doors and Frames.

e. ANSI A250.10 - Test Procedure and Acceptance Criteria for Prime Painted Steel Surfaces for Steel Doors and Frames.

2. American Society for Testing and Materials International (ASTM):

a. ASTM A153/A153M Standard for Zinc Coating (hot-Dip) on Iron and Steel Hardware.

b. ASTM A653/A653M - Standard Specification for Steel Sheet, Zinc-Coated (Galvanized) or Zinc-Iron Alloy-Coated (Galvannealed) by the Hot-Dip Process.

c. ASTM A879/A879M Standard Specification for Steel Sheet, Zinc Coated by the Electrolytic Process for Applications Requiring Designation of the Coating mass on Each Surface.

d. ASTM A1008/A1008M Standard Specification for Steel, Sheet, Cold-Rolled, Carbon, Structural, High-Strength Low-Alloy, High-Strength Low-Alloy with Improved Formability, Required Hardness, Solution Hardened, and Bake Hardenable.

e. ASTM A1011/A1011M Standard Specification for Steel, Sheet and Strip, Hot-Rolled, Carbon, Structural, High-Strength Low-Alloy, High-Strength Low-Alloy with Improved Formability, and Ultra-High Strength.

f. ASTM C665 Standard Specification for Mineral-Fiber Blanket Thermal Insulation for Light Frame Construction and Manufactured Housing

g. ASTM C1363 - Standard Test Method for Thermal Performance of Building Materials and Envelope Assemblies by Means of a Hot Box Apparatus

h. ASTM E136 Standard Test Method for Assessing Combustibility of Materials Using a Vertical Tube Furnace at 750 degrees Celsius.

3. Door and Hardware Institute (DHI):

a. DHI A115 Series - Specifications for Steel Doors and Frame Preparation for Hardware; Door and Hardware Institute (ANSI/DHI A115 Series).

4. The National Association of Architectural Metal Manufacturers (NAAMM):

a. NAAMM HMMA 840 - Guide Specification for Installation and Storage of Hollow Metal Doors and Frames.

5. National Fire Protection Association (NFPA):

a. NFPA 80 - Standard for Fire Doors and Other Opening Protectives.

6. Underwriters Laboratories Inc. (UL):

a. UL 10C – Standard for Positive Pressure Fire Tests of Door Assemblies.

b. UL 752 Bullet Protection Ratings.

c. UL 1784 - Standard for Air Leakage Tests of Door Assemblies and Other Opening Protectives.

1.03 SUBMITTALS

A. Submit:

1. Product Data: Materials and details of design and construction, hardware locations, reinforcement type and locations, anchorage and fastening methods, and finishes; and one copy of referenced grade standard.

2. LEED Submittals:

a. Where LEED certification is required by the project, submit the same documentation for approval as required by GBCI as a project submittal. Highlight the relevant LEED information.

b. LEED documentation is to be submitted separately and titled LEED SUBMITTAL.

c. Building Product Disclosure and Optimization credit data: Submit data to support the LEED SUBMITTAL.

3. Shop Drawings: Details of each opening, showing elevations, glazing, frame profiles, and identifying location of different finishes, if any. Include installation details for each condition.

B. Transmit:

1. Installation Instructions: Manufacturer's published instructions, including all special installation instructions relating to this project.

2. Manufacturer’s Qualification:

a. Provide evidence of having personnel and plant equipment capable of fabricating hollow metal door and frame product of the types specified.

1.04 QUALITY ASSURANCE

A. Manufacturer: Company specializing in manufacturing the products specified in this Section with minimum 3 years documented experience.

B. Single Source: Obtain hollow metal doors and frames from a single manufacturer.

C. Maintain at the project site a copy of all reference standards dealing with installation.

1.05 DELIVERY, STORAGE, AND HANDLING

A. Store in accordance with NAAMM HMMA 840.

B. Clearly identify and mark each door and frame to correspond with same number as listed on the schedule submitted with shop drawings.

C. Protect with resilient packaging; avoid humidity build-up under coverings; prevent corrosion.

D. Inspect hollow metal work upon delivery for damage. Minor damages may be repaired provided refinished items are equal in all respects to new work. Remove and replace damaged items as directed by Resident Engineer.

PART 2 - PRODUCTS

2.01 MATERIALS

A. Doors and Frames:

1. Requirements for All Doors and Frames:

a. Accessibility: Comply with ANSI/ICC A117.1.

b. Door Top Closures: Flush with top of faces and edges.

c. Door Edge Profile: Beveled on both edges.

d. Door Texture: Smooth faces.

e. Infill panels: Non-removable stops on non-secure side.

f. Hardware Preparation: In accordance with DHI A115 Series, with reinforcement from same material as doors and frames welded in place, in addition to other requirements specified in door grade standard.

g. Finish: Galvanized, unless noted otherwise in door schedule: All components hot-dip zinc-iron alloy-coated (galvannealed), ASTM A653/A635M, A40 coating thickness or baked –on primed paint, for field finishing.

h. Glazed Panels: Provide non-removable stops on the non-secured side.

i. Fabricate concealed stiffeners and hardware reinforcement from either cold- or hot-rolled steel sheet.

2. Combined Requirements: If a particular door and frame unit is indicated to comply with more than one type of requirement, comply with all the specified requirements for each type; for instance, an exterior door that is also indicated as being sound-rated shall comply with the requirements specified for exterior doors and for sound-rated doors; where two requirements conflict, comply with the most stringent.

3. Doors and Frames: Label in accordance with code requirements.

B. Steel Doors:

1. Exterior Doors:

a. Grade: Maximum-Duty Doors and Frames ANSI A250.4 Level 4, physical performance Level A, Model 2, seamless galvanizing: All components hot-dipped zinc-iron alloy-coated (galvannealed) in accordance with ASTM A653/A653M, coating thickness: A60.

2. Thermal-Rated (Insulated) Doors: For exterior doors enclosing conditioned space provide doors fabricated with coefficient of thermal transmission (U-Factor) to meet energy code requirements when tested according to ASTM C1363 as listed in Issued for Construction Drawings.

3. Acoustic-Rated Doors: Manufacturer’s standard construction to meet acoustic requirements indicated on the Issued for Construction Drawings, minimum STC 33, complying with ANSI/SDI 128:

a. Grade: ANSI A250.8 Level 2, Physical performance Level B, Model 1, full flush.

4. Interior Doors, Non-Fire-Rated:

a. Grade: ANSI A250.8 Level 2, physical performance Level B, Model 1, full flush.

5. Interior Doors, Fire-Rated:

a. Grade: ANSI A250.8 Level 2, physical performance Level B, Model 1, full flush.

b. Fire Rating: As indicated on Door and Frame Schedule, complying with NFPA 80 and tested in accordance with UL 10C and NFPA 252 ("positive pressure tests").

1) Temperature Rise Ratings (TRR): In accordance with local building code and authorities having jurisdiction.

2) Provide units listed and labeled by UL.

3) Attach fire rating label to each fire rated unit.

c. Smoke and Draft Control Doors (Pressure Resistant Doors) (Indicated as "S" in Door Schedule): In addition to required fire rating, provide door assemblies tested in accordance with UL 1784 with maximum air leakage of 3.0 cubic feet per minute per square foot of door opening at 0.10-inch water gage pressure at both ambient and elevated temperatures; with "S" label; if necessary, provide additional gasketing or edge sealing:

1) Grade: ANSI A250.8 Level 3, physical performance Level A, Model 1, full flush.

2) Door hardware to conform to door assembly design pressure loads.

3) Fire rated assembly tested to UL 10C.

d. Steel Bullet Resistant Doors and frames:

1) Product: Subject to compliance with requirements, provide the following or approved equal:

a) Basis of Design: Ceco ArmorShield flush door and frame system rated UL 752 Level 3 or greater.

2) Certified and third-party tested in accordance with UL 752 and NIJ standards.

3) Seamless door edge.

4) Minimum Door 12-gauge steel door faces with ballistic core and 14-gauge frame.

5) Hinges; Stainless steel continuous pin and barrel with stainless steel bearings

6) Panels: Same construction, performance, and finish as doors. Doors with infill panels shall be constructed as tubular stile and rail construction with formed integral stops on the non-secure side. Provide glazing spacers as required to accommodate infill panels indicated on contract documents.

7) Fire rated assembly tested to UL 10C.

C. Steel Frames:

1. General:

a. Comply with the requirements of grade specified for corresponding door.

b. Finish: Same as for door where doors are not factory-finished.

c. Provide mortar guard boxes for hardware cut-outs in frames to be installed in masonry.

d. Frames in Masonry Walls: Size to suit masonry coursing with head member 4 inches high to fill opening without cutting masonry units.

e. Frames wider than 48 Inches: Reinforce with steel channel fitted tightly into frame head, flush with top.

2. Exterior Door Frames: Face welded, seamless with joints filled:

a. Frame Construction: Fully welded, thermally broken, constructed of hot-dip zinc-iron alloy-coated (galvannealed) steel in conformance with ASTM A-653, A60 coating designation.

b. Weatherstripping/thresholds: Separate, see Section 08 71 00 - Door Hardware.

c. Material Thickness: minimum 14-gauge.

d. Insulation: Fully-filled frame cavity, manufacturer's standard insulation.

e. Construction: Full profile welded.

3. Interior Door Frames, Non-Fire-Rated: Fully welded type:

a. Finish: Factory primed, for field finishing.

4. Interior Door Frames, Fire-Rated: Fully welded type.

a. Fire Rating: Same as door, labeled.

2.02 FRAME ANCHORS

A. Jamb Anchors:

1. Masonry Type: Adjustable strap-and-stirrup or T-shaped anchors to suit frame size, not less than 0.042-inch thick, with corrugated or perforated straps not less than 2-inches wide by 10- inches long; or wire anchors not less than 0.177-inch thick.

2. Stud Wall Type: Designed to engage stud, welded to back of frames; not less than 0.042- inch thick.

3. Quantity: Minimum of three anchors per jamb, with one additional anchor for frames with no floor anchor. Provide one additional anchor for each 24 inches of frame height above 7 feet.

4. Post-Installed Expansion Anchor: Minimum 3/8-inch diameter bolts with expansion shields or inserts, with manufacturer's standard pipe spacer.

B. Floor Anchors: Provide floor anchors for each jamb and mullion that extends to floor:

1. Monolithic Concrete Slabs: Clip-type anchors, with two holes to receive fasteners.

2. Separate Topping Concrete Slabs: Adjustable-type anchors with extension clips, allowing not less than 2-inch height adjustment. Terminate bottom of frames at finish floor surface.

C. Retain "Floor Anchors for Concrete Slabs with Underlayment" Paragraph below when using flowable underlayment over slabs or floor structure.

D. Floor Anchors for Concrete Slabs with Underlayment: Adjustable-type anchors with extension clips, allowing not less than 2-inch height adjustment. Terminate bottom of frames at top of underlayment.

E. Material: ASTM A879/A879M, Commercial Steel (CS), 04Z (12G) coating designation; mill phosphatized.

F. For anchors built into exterior walls, steel sheet complying with ASTM A1008/A1008M or ASTM A 1011/A1011M; hot-dip galvanized according to ASTM A153/A153M, Class B.

2.03 ACCESSORIES

A. Temporary Frame Spreaders: Provide for all factory- or shop-assembled frames.

B. Inserts, Bolts, and Fasteners for accessories: Hot-dip galvanized according to ASTM A 153/A153M.

C. Power-Actuated Fasteners in Concrete: Fastener system of type suitable for application indicated, fabricated from corrosion-resistant materials, with clips or other accessory devices for attaching hollow-metal frames of type indicated.

D. Mineral-Fiber Insulation: ASTM C665, Type I (blankets without membrane facing); consisting of fibers manufactured from slag or rock wool; with maximum flame-spread and smoke-developed indexes of 25 and 50, respectively; passing ASTM E136 for combustion characteristics.

E. Louvers:

1. Provide louvers for interior doors, where indicated, which comply with SDI 111, with blades or baffles formed of 0.020-inch- (0.5-mm-) thick, cold-rolled steel sheet set into 0.032-inch- (0.8-mm-) thick steel frame:

a. Sight-proof Louvers: Stationary louvers constructed with inverted-V or inverted-Y blades.

b. Form corners of moldings with hairline joints. Provide fixed frame moldings on outside of exterior and on secure side of interior doors and frames.

c. When specified, fire doors shall be provided with fire labeled louvers in accordance with applicable building codes and SDI-118.

2.04 FABRICATION

A. Fabricate hollow metal work to be rigid, without warp, or buckle. Accurately form metal to required sizes and profiles, with minimum radius for thickness of metal.

B. Tolerances: Fabricate hollow metal work to tolerances indicated in SDI 117.

C. Glazed Lites: Provide stops and moldings around glazed lites where indicated. Form corners of stops and moldings with mitered hairline joints.

1. Provide integral frame moldings on outside of exterior and on secure side of interior doors and frames.

2. Coordinate rabbet width between fixed and removable stops with type of glazing and type of installation indicated.

3. Provide insulated glazing at all exterior door vision lites:

a. Refer to Section 08 80 00 - Glazing, insulated glazing units.

D. Hollow-Metal Frames: Fabricate in one piece except where handling and shipping limitations require multiple sections. Where frames are fabricated in sections, provide alignment plates or angles at each joint, fabricated of metal of same or greater thickness as frames.

E. Hollow Metal Doors:

1. Exterior Doors: Provide weep-hole openings in bottom of exterior doors to permit moisture to escape. Seal joints in top edges of doors against water penetration.

2. Astragals: Provide overlapping astragal on one leaf of pairs of doors where required by NFPA 80 for fire-performance rating or where indicated. Extend minimum 3/4 inch beyond edge of door on which astragal is mounted or as required to comply with published listing of qualified agency.

F. Hardware Preparation: Factory prepare hollow-metal doors and frames to receive templated mortised hardware, and electrical wiring; include cutouts, reinforcement, mortising, drilling, and tapping according to SDI A250.6, the Door Hardware Schedule, and templates:

1. Locate hardware as indicated, or if not indicated, according to ANSI/SDI A250.8.

2. Reinforce doors and frames to receive non-templated, mortised and surface-mounted door hardware.

3. Comply with applicable requirements in ANSI/SDI A250.6 and ANSI/DHI A115 Series specifications for preparation of hollow metal work for hardware.

4. Coordinate locations of conduit and wiring boxes for electrical connections with Division 26 Sections.

5. Provide the manufacturer's heavy duty high frequency hinge reinforcing system at all hinge locations.

G. Comply with BHMA A156.115 for preparing hollow-metal doors and frames for hardware.

2.05 FINISHES

A. Doors and frames to be finished with a high-performance industrial coating as defined in Specification Section 09 96 00 - High- Performance Coatings.

B. Primer: Rust-inhibiting, complying with ANSI A250.10, factory applied, door manufacturer's standard and compatible with substrate and field-applied finish coatings

1. Siliconized primers are not permitted.

C. Corrosion Resistant Undercoating:

1. Asphaltic adhesive undercoating approved by hollow metal door manufacturer.

2. Approved for use with UL fire-rated door frames.

3. Water-based.

4. Moisture resistant.

5. Quick drying.

6. Free of Volatile Organic Compounds.

2.06 PREPARATION FOR ELECTRONIC HARDWARE SYSTEMS

A. Prepare all doors required for the application of electronic locks, remote monitoring, door position switches, etc. which require the door to have wires through the door shall be provided pre-wired with a factory installed quick connect. The use of non-wired conduit in the door, or exposed wiring on the door or frame surface, is not acceptable.

PART 3 - EXECUTION

3.01 EXAMINATION

A. Verify existing conditions before starting work.

B. Verify that opening sizes and tolerances are acceptable.

3.02 PREPARATION

A. Coat inside of frames installed in concrete or masonry walls with manufacturer-approved corrosion-resistant undercoating.

3.03 INSTALLATION

A. Install in accordance with the requirements of the specified door grade standard and NAAMM HMMA 840 in accordance with manufacturer's instructions based on conditions present.

B. Set frames accurately in position, plumbed, aligned, and braced securely until permanent anchors are set. After wall construction is complete, remove temporary braces, leaving surfaces smooth and undamaged.

1. Install in accordance with the requirements of the specified door grade standard and NAAMM HMMA 840..

2. Install fire-rated units in accordance with NFPA 80.

3. Check plumbness, squareness, and twist of frames as walls are constructed. Shim as necessary to comply with installation tolerances.

C. Erection Tolerances:

1. Clearances between Door and Frame: As specified in ANSI A250.8.

2. Maximum Diagonal Distortion: 1/16-inch measured with straight edge, corner to corner.

D. Coordinate frame anchor placement with wall construction.

E. Install louvers where shown, with tamper proof screws.

F. Install perforated metal infill panels into opening with non-removable stops on non-secure side of door.

G. Install glazed panels where shown, with tamper proof screws.

H. Grouting Door Frames: Do not grout frames.

I. Fill door frames between conditioned and non-condition spaces with mineral fiber insulation prior to installation.

J. Coordinate installation of hardware.

K. Coordinate installation of electrical connections to electrical hardware items.

L. Field Touch-Up Painting: Touch-up doors and frames including the refinishing of raw surfaces resulting from job fitting, repair of job inflicted scratches and or marred surfaces.

3.04 ADJUSTING

A. Adjust for smooth and balanced door movement in accordance with manufacturer's instructions.

B. Adjust and lubricate hardware for proper operation.

3.05 COMMISSIONING

A. Commission doors in accordance with Section 01 91 13 - General Commissioning Requirements, Section 07 08 00 - Commissioning of Building Enclosure and Section 08 08 00 - Commissioning of Openings.

B. Coordinate with Commissioning (Cx) Authority, Building Envelope Commissioning (BECxA) Authority and Contractor's Commissioning Coordinator.

3.06 PROTECTION

A. Protect installed work as required by the manufacturer to maintain product performance, design criteria and warranty.

3.07 SCHEDULES

A. Refer to Door and Frame Schedule on the Issued for Construction Drawings.

END OF SECTION

SECTION 08 31 00

ACCESS DOORS AND PANELS

PART 1 - GENERAL

1.01 SUMMARY

A. Section includes:

1. Requirements for the following:

a. Access door and frame units, fire-rated and non-rated, in wall, ceiling, and floor locations.

b. Access panel and frame units.

c. Flush-mounted Electrical and Communication Door with Concealed Frame.

d. Access doors indicated in the Contract Documents, or otherwise required to access concealed construction requiring regular maintenance or repair.

1.02 REFERENCES

A. This Section incorporates by reference the latest revisions of the following documents:

1. American Society for Testing and Materials International (ASTM):

a. ASTM A666 - Standard Specification for Annealed or Cold-Worked Austenitic Stainless-Steel Sheet, Strip, Plate, and Flat Bar.

b. ASTM A879/A879M - Standard Specification for Steel Sheet, Zinc Coated by the Electrolytic Process for Applications Requiring Designation of the Coating Mass on Each Surface.

c. ASTM A1008/A1008M - Standard Specification for Steel, Sheet, Cold-Rolled, Carbon, Structural, High-Strength Low-Alloy, High-Strength Low-Alloy with Improved Formability, Solution Hardened, and Bake Hardenable.

d. ASTM B209 - Standard Specification for Aluminum and Aluminum-Alloy Sheet and Plate.

e. ASTM B221 - Standard Specification for Aluminum and Aluminum-Alloy Extruded Bars, Rods, Wire, Profiles, and Tubes.

2. National Fire Protection Association (NFPA):

a. NFPA 80 - Standard for Fire Doors and Other Opening Protectives.

b. NFPA 252 - Standard Method of Fire Tests of Door Assemblies.

c. NFPA 288 - Standard Methods of Fire Tests of Horizontal Fire Door Assemblies Installed in Horizontal Fire Resistance-Rated Floor System.

1.03 COORDINATION

A. Coordinate the work with other work requiring access doors. Determine specific locations and sizes needed to gain access to concealed equipment and indicate in Project Record Documents.

1.04 SUBMITTALS

A. Product Data: Provide a schedule of access doors including sizes, types, finishes, hardware, locations, profiles, and details of adjoining work.

B. Shop Drawings:

1. Indicate exact position of each access door unit, details of frames, anchorage, and accessory items.

2. Provide detail drawings of the Access Doors and Frames and coordination with adjacent finish and partition types.
Provide plans, sections, and details for the Flush Mechanical and Communication Access doors.

C. Product Schedule: Provide complete access door schedule, including types, locations, sizes, latching or locking provisions, and other data pertinent to installation.

D. Closeout: Submit keys to the Resident Engineer.

PART 2 - PRODUCTS

2.01 PERFORMANCE REQUIREMENTS

A. Design Requirements:

1. Fabricate floor access assemblies to support live load of 100 pounds per square foot with deflection not to exceed 1/180 of span.

B. Regulatory Requirements:

1. Conform to Authorities Having Jurisdiction (AHJ's) Building Code requirements for fire-rated access doors.

a. Provide access doors of fire-rating equivalent to the fire-rated assembly in which they are to be installed. Fire rated-door assemblies shall comply with NFPA 80.

2. Provide products listed and labeled by UL as suitable for the purpose specified and indicated. Test for vertical installations: NFPA 252 or UL 10B. Test for horizontal installations: NFPA 288.

2.02 MANUFACTURERS

A. Access Doors: Acceptable manufacturers include:

1. Acudor Products Inc.

2. The Williams Brothers Corporation of America.

3. Milcor Inc.

4. Nystrom Products Co.

2.03 MATERIALS

A. Steel Sheet: ASTM A1008/A1008 M commercial quality, cold-rolled steel sheet with baked-on, rust-inhibitive primer for interior doors.

B. Zinc-Coated Steel Sheet: ASTM A879/A879M, electrolytic zinc-coated steel sheet with Class C coating and phosphate treatment to prepare surface for painting for exterior doors.

C. Stainless-Steel Sheet, Strip, Plate, and Flat Bars: ASTM A666, Type 316 for exterior and Type 304 for interior. Remove tool and die marks and stretch lines or blend into finish.

D. Continuous Stainless-Steel Hinges-Station Ticketing Kiosk:

1. Hinges to be non-handed and of slim barrel design. Hinges to made of Type 316 stainless steel and shall have a concealed Teflon-coated stainless-steel pin with twin self-lubricated nylon bearings at each knuckle. Hinges shall be UL list up to and including three (3) hours and shall be available with power transfer cutouts when necessary.

2. Acceptable Manufacturers: Markar, McKinney, or approved equal.

3. Hinge size and configuration per contract documents.

E. Aluminum Extrusions: ASTM B221, Alloy 6063-T6.

1. Mill finish, AA-M10 (Mechanical Finish: as fabricated, unspecified).

F. Aluminum-Alloy Plate: ASTM B209, Alloy 6061-T6.

1. Mill finish, AA-M10 (Mechanical Finish: as fabricated, unspecified).

2. Non-slip finish: Bonded aluminum oxide grit or proprietary plasma-bonded metal matrix such as W.S. Molnar "Slip-Not" or IKG "Mebac" (Metal Bonded Anti-Slip Coating)

a. Static coefficient of friction not less than 0.80, wet condition.

2.04 MANUFACTURED UNITS

A. Access Doors and Panels:

1. General: Factory fabricated, fully assembled units with corner joints welded, filled, and ground flush; square and without rack or warp; coordinate requirements with assembly's units are to be installed in.

B. Access Door Units – Walls and Ceilings:

1. Door and Frame Units with Exposed Trim: Formed steel.

a. Doors: 16-gauge steel.

b. Frames and flanges:14-gauge steel.

c. Trim: 1-inch flange overlapping surfaces surrounding door frame

2. Trim-less Flush Frame Units:

a. Metal: 0.058-inch-thick steel.

b. Frame Configuration: Minimum 14-gauge steel flange integral with frame and overlapping face of adjoining gypsum board, with surface formed to receive joint compound.

c. Door panels: Minimum 16-gauge steel sheet.

d. Provide recessed door face where indicated to receive tile or brick veneer and setting bed infill.

1) Infill Reinforcement: Type and finish as required by setting bed manufacturer for application indicated. Weld or anchor mesh reinforcement to door panel when required by setting bed manufacturer for application indicated.

2) Coordinate infill depth with infill installer.

e. Sizes:

1) Walls and Ceilings: Provide access doors sized to accommodate clearances of equipment being accessed.

2) Personnel Entry: To comply with Washington L&I requirements.

3) `Lay-in' Grid Ceilings: To match grid module

3. Hardware:

a. Hinges: Fully-concealed, 175-degree continuous steel piano hinge.

b. Lock: Flush cylinder lock with latch, two keys for each unit.

c. Provide self-latching bolt, key operated, and self-closing mechanism for fire-rated access doors.

4. Fire Ratings: Match rating of the partition or floor/ceiling assembly in which the access panel is to be installed:

a. Galvanized, hot dipped finish.

5. Finish: Phosphate-treated with manufacturer's standard electrostatically-applied baked-enamel finish:

a. Prime coat with alkyd primer.

C. Access Units – Interior Floors:

1. Hatch and Frame Units: Formed steel.

a. Frames and anchors: 0.058 inch thick.

b. Type and Size: As indicated on Issued for Construction Drawings

c. Hardware:

1) Hinge: 175-degree steel hinges with removable pin.

2) Lock: Screw driver slot for quarter turn cam lock.

3) Removable wrench lift handle.

d. Galvanized, hot dipped finish.

e. Prime coat with alkyd primer.

D. Flush Mechanical and Communication Door with Concealed Frame:

1. Access Door Frame:

a. Frame Configuration: Frame recessed from face of door sufficient to allow overlapping face of adjoining metal panels.

b. Provide door frame sufficient to prevent racking and distortion of the door panel. Loads shall not be transferred to the metal door panel.

c. Size and configuration per contract documents.

2. Flush Access Door Panel:

a. Comply with load requirements specified for adjacent metal panels as stated elsewhere in the Contract Documents.

b. Exposed edges: Comply with adjacent metal panels.

c. Gap between Door Panel and Adjoining Metal Panels: Match adjacent panel system jointing system. Allow for swing action.

d. Include attachment system components, panel stiffeners, and accessories required for vandal-resistant application.

e. Fasteners: Per adjacent metal panel system; concealed.

3. Door Panel and Frame: See Contract Drawings for Size, configuration, and swing.

4. Hardware: Unless otherwise stated elsewhere in the Contract Documents, provide the following:

a. Hinges: Fully-concealed, 175-degree continuous piano hinge; Stainless Steel Type 316

b. Lock: Flush cylinder lock with latch, two keys for each unit; stainless steel. Key all locks alike. Cylinders and keying as stated elsewhere in the Contract Documents.

c. Locking Devices: To hold door in flush smooth plane when closed.

5. Finish: Match adjacent surface.

2.05 FABRICATION

A. Manufacture each access door assembly as an integral unit ready for installation.

B. Weld, fill, and grind joints to ensure flush and square unit. Construction should be continuous and welded. Grind welds smooth and flush with adjacent surfaces. Furnish attachment devices and fasteners of type required to secure access panels to types of supports indicated.

1. For exposed flange units, provide 1 inch (nominal) wide trim around perimeter of frame.

2. For gypsum board assemblies, furnish frames with edge trim for gypsum board or gypsum base.

3. For masonry installations, furnish frames with adjustable metal masonry anchors.

C. Recessed Panel Doors: Form face of panel to provide recess for application of applied finish. Reinforce panel as required to prevent buckling.

1. Furnish recessed panel doors for concealed installation in acoustic tile ceiling systems.

2. Furnish recessed panel doors and frames for concealed installation in gypsum wall board.

D. Locking Devices: Furnish as required to hold door in flush smooth plane when closed. Provide two (2) keys per lock and key locks alike. Provide access sleeves and plastic grommets installed in holes cut through finish for recessed panel doors.

E. Extruded Aluminum: After fabrication, apply manufacturer's standard protective coating on aluminum that will come in contact with concrete.

PART 3 - EXECUTION

3.01 EXAMINATION

A. Verify that rough openings for door and frame are correctly sized and located to allow convenient access to the concealed work. Coordinate installation with mechanical, electrical, and plumbing. Do not place ceiling panels directly over equipment that would impede maintenance access.

B. Advise Installers of other work about specific access door installation requirements, including sizes of openings, locations of supports, inserts, and anchoring devices. Furnish inserts and anchoring devices for access doors that must be built into other construction. Coordinate delivery with other work to avoid delay.

3.02 INSTALLATION

A. Install units in accordance with manufacturer's instructions.

B. Install frames plumb and level in openings. Secure rigidly in place, with plane of face panels aligned with adjacent finished surfaces.

C. Position units to provide convenient access to the concealed work requiring access.

3.03 ADJUSTING

A. Adjust hardware and panels after installation for proper operation.

B. Remove and replace panels or frames which are warped, bowed, or otherwise damaged.

END OF SECTION

SECTION 08 33 26

OVERHEAD COILING GRILLES

PART 1 - GENERAL

1.01 SUMMARY

A. Section includes:

1. Requirements for the following:

a. Overhead coiling metal grilles and operating hardware, and electric operation.

b. Wiring from electric circuit disconnect to operator and wiring to control station.

1.02 REFERENCES

A. This Section incorporates by reference the latest revisions of the following documents:

1. American Society for Testing and Materials International (ASTM):

a. ASTM A666 Standard Specification for Annealed or Cold-Worked Austenitic Stainless-Steel Sheet, Strip, Plate, and Flat Bar.

b. ASTM B169/B169M - Standard Specification for Aluminum Bronze Sheet, Strip, and Rolled Bar.

c. ASTM B221 - Standard Specification for Aluminum and Aluminum-Alloy Extruded Bars, Rods, Wire, Profiles, and Tubes.

2. National Electrical Manufacturers Association (NEMA):

a. NEMA 250 Enclosures for Electrical Equipment (1000 Volts Maximum).

b. NEMA ICS 2 Industrial Control and Systems – Industrial Control and Systems Controllers, Contractors and Overload Relays Rate 600 Volts.

c. NEMA MG 1 Motors and Generators.

3. Underwriters Laboratories Inc. (UL):

a. UL 325 Door, Drapery, Gate Louver, and Window Operators and Systems.

1.03 COORDINATION

A. Provide setting drawings, templates and instructions for inserts and anchors which must be set into other construction. Coordinate delivery to avoid delays.

1.04 SUBMITTALS

A. Product Data: Submit general construction, component connections and details, and electrical equipment including motors.

B. LEED Submittals:

1. Where LEED certification is required by the project, submit the same documentation for approval as required by GBCI as a project submittal. Highlight the relevant LEED information.

2. LEED documentation is to be submitted separately and titled LEED SUBMITTAL.

3. Building Product Disclosure and Optimization credit data: Submit data to support the LEED SUBMITTAL.

C. Shop Drawings: Indicate details and dimensions of installation including tracks, structural supports, connection points, anchorage methods, closures, hardware locations, locations of control boxes and installation details. Shop drawings to be project specific.

D. Wiring Diagrams: Submit for coordination with the electrical subcontractor.

E. Samples: Submit four (4) each for grille members, 8 inches by 10 inches in size illustrating shape, color and finish texture.

F. Manufacturer's Instructions: Indicate installation sequence and procedures, adjustment and alignment procedures.

G. Maintenance Data: Indicate lubrication requirements and frequency.

H. Spare Parts List: Submit recommended spare parts list, together with parts numbers, prices and photographs, or catalog cuts of spare parts.

I. Warranty: Submit manufacturer warranty and ensure forms have been completed in Sound Transit's name and registered with manufacturer.

1.05 QUALITY ASSURANCE

A. Manufacturer’s Qualifications: Furnish each assembly as a complete unit produced by a single manufacturer, including hardware, operators, controls, accessories and installation components.

B. Regulatory Requirements:

1. Products Requiring Electrical Connection: Listed and classified by Underwriters Laboratories Inc. as suitable for the purpose specified and indicated.

1.06 PROJECT CONDITIONS

A. Field measurements: Check actual locations of walls, slabs, framing, and other construction to which work of this section must fit, by accurate field measurements before fabrication; show recorded measurements on final shop drawings. Coordinate fabrication, delivery and installation schedule with construction progress to avoid delay of work.

B. Where field measurements cannot be made without delaying the Work, guarantee dimensions and proceed with fabrication of products without field measurements. Coordinate construction with work of other trades to ensure that actual dimensions correspond to guaranteed dimensions. Allow for fitting and trimming.

1.07 WARRANTY

A. Special Warranty: Furnish door manufacturer's single source warranty agreeing to repair or replace counterbalance mechanism should any failure or malfunction occur prior to reaching 20,000 cycles; other components shall be warranted for a period of two years. Warranty shall be inclusive of all labor and materials, and not limited to original cost of materials and labor.

PART 2 - PRODUCTS

2.01 MANUFACTURERS

A. Overhead Coiling Grille:

1. Cornell Iron Works, Inc.

2. Overhead Door.

3. Wayne Dalton.

2.02 COMPONENTS

A. Service Overhead Coiling Door: Overhead coiling door formed with curtain of interlocking metal slats.

B. Operation Cycles: Door components and operators capable of operating for not less than 20,000. One operation cycle is complete when a door is opened from the closed position to the fully open position and returned to the closed position:

1. Include tamperproof cycle counter.

C. Door Curtain: Provide one of the following:

1. Aluminum slats.

2. Stainless steel bars.

D. Bottom Bar: Manufacturer’s standard and finished to match door.

E. Gasket Seal. Manufacturer's standard continuous gaskets between slats.

F. Curtain Jamb Guides: Steel angles with exposed finish matching curtain slats.

G. Hood: Material and finish to match curtain:

1. Mounting: Face of wall.

H. Locking Devices: Equip door with interlock switch for automatic operator.

I. Motor Enclosure for Exterior Mounted Grille: Same material and finish as specified for hood enclosure to conceal motor from all sides. Provide locking hinged bottom for access to manual override chain. Provide chain keeper inside enclosure for securing of chain.

2.03 DOOR CURTAIN MATERIALS AND CONSTRUCTION

A. Aluminum Door Curtain Slats: ASTM B169/B169M and/or ASTM B221

1. Fabricate overhead coiling door curtain of interlocking metal slats in a continuous length for width of door without splices. Unless otherwise indicated, provide slats of thickness and mechanical properties recommended by door manufacturer for performance, size, and type of door indicated, and as follows:

a. Flat profile slats of 2-5/8-inch (67-mm) center-to-center height.

b. No. 5F, 16-gauge (0.050 mm) aluminum.

c. Finish:

1) Powder Coat: Zirconium pre-treatment followed by baked-on polyester powder coat minimum 2.5 mils (0.065 mm) cured film

thickness; ASTM D-3363 pencil hardness: H or better. Color as selected by Architect from manufacturer's color range.

B. Stainless Steel bars: ASTM A666

1. Fabricate curtain with round horizontal bars minimum 5/16-inch diameter spaced minimum 1 1/2 inch on center connected with vertical links spaced 6 inch on center:

a. Type 304 Stainless steel; horizontal bar curtain, coiling on overhead counterbalanced shaft:

1) Finish: Satin Finish: No. 4.

C. Provide ends with nylon runners for quiet operation.

D. Bottom Bar: Manufacturer’s standard and finished to match door:

1. Compatible with safety edge.

E. Curtain Jamb Guides: Manufacturer's standard angles or channels and angles of same material and finish as curtain slats unless otherwise indicated, with sufficient depth and strength to retain curtain, to allow curtain to operate smoothly, and to withstand loading. Slot bolt holes for guide adjustment. Provide removable stops on guides to prevent overtravel of curtain.

2.04 HOODS

A. General: Form custom sheet metal hood to entirely enclose coiled curtain, operating mechanism and electrical components and conduits at opening head. Contour to fit end brackets to which hood is attached. Roll and reinforce top and bottom edges for stiffness. Form closed ends for surface-mounted hoods and fascia for any portion of between-jamb mounting that projects beyond wall face. Equip hood with intermediate support brackets as required to prevent sagging:

1. Sheet metal of same material as grille; minimum 0.0375 inch thick; finish to match curtain.

B. Motor Enclosure for Exterior Mounted Grille: Same material and finish as specified for hood enclosure to fully conceal motor from all sides:

1. Operational hinged bottom for manual override chain. Provide chain keeper inside enclosure for securing of chain.

2.05 EQUIPMENT

A. Electric Operation:

1. Electric Operators:

a. Mounting: Side mounted.

b. Motor Enclosure:

1) Exterior grilles: NEMA MG 4X.

2) Interior grilles: NEMA MG 1 Type I; open drip proof.

c. Motor Rating: 1/2 horsepower; continuous duty.

d. Motor Voltage: 208 volt, 3-phase, 60 Hz.

e. Motor Controller: NEMA ICS 2 Part 8, full voltage, reversing magnetic motor starter.

f. Controller Enclosure: NEMA 250, Type 1.

g. Opening Speed: 12 inches per second.

h. Brake: Adjustable friction clutch type, activated by motor controller.

i. Emergency operation for egress:

1) Provide coiling grille motors with on-board UPS system for emergency powered operation.

2) Provide at wall or post mounted “mushroom” button with hinged clear plastic cover to disengage motor operator and automatically open door for emergency egress when button is pressed. Locate the wall or post-mounted interior emergency exit button away from reach through the door:

a) No emergency exit button is required where an adjacent man door is provided with panic hardware.

3) Provide electric lock at bottom bar synchronized with emergency egress and access control functions.

2. Control Station: Basis of design:

a. Enclosure: Schneider Electric 9001KYSS3, NEMA 4 rated stainless steel control station.

b. Face plate: stainless steel engraved with OPEN-STOP-CLOSE.

c. Buttons: Schneider Electric 9001KR1BH13 NEMA 4 rated flush head push button. Recessed mounting.

d. Provide a Controls Station at both interior and exterior sides of the door if there is no adjacent man door. Provide at only interior if there is an adjacent man door.

e. Provide access control card readers to avoid unauthorized operation.

3. Safety Edge: Located at bottom of curtain, full width, electro-mechanical sensitized type, wired to stop operator upon striking object, hollow neoprene covered.

4. Remote Monitoring and Control: Provide Remote Interface Terminal Strip inside the door control station for remote monitoring and control of coiling door or grille:

a. Terminal blocks shall accept up to #14AWG wire.

b. Wire to left side of terminal blocks. Right side for remote interface terminations by others.

c. Two terminal blocks per monitoring or control.

d. Label blocks as shown in the table below.

e. Point functionality as defined in table below.

f. Wetting voltage nominally 24VDC.

Remote Interface Terminal Strip				
Type	**Operation/PLC IO Description**	**Dry Contact Function**		
		NO/NC	Open State	Close State
Status	Open-Maintained	NO	Not fully Opened	Fully Opened
Status	Closed-Maintained	NO	Not fully Closed	Fully Closed
Control	Permissive Command -from LCC or Lenel- (Momentary)	NO	No operation	Allow local door operation
Control	Open Command (Momentary)	NO	No operation	Open door
Control	Close Command (Momentary)	NO	No operation	Close door
Status	Intrusion Alarm (Momentary)	NC	Alarm	No operation

PART 3 - EXECUTION

3.01 EXAMINATION

A. Examine substrates areas and conditions, with Installer present, for compliance with requirements for substrate construction and other conditions affecting performance of the Work.

B. Examine locations of electrical connections.

C. Proceed with installation only after unsatisfactory conditions have been corrected.

3.02 INSTALLATION

A. Install grill unit assembly and operating equipment complete with necessary hardware, anchors, inserts, hangers, and equipment supports in accordance with manufacturer's instructions:

1. Power-Operated Grilles: Install according to UL 325.

B. Erection Tolerances:

1. Maintain dimensional tolerances and alignment with adjacent work.

2. Maximum Variation From Plumb: 1/16 inch.

3. Maximum Variation From Level: 1/16 inch.

C. Use anchorage devices to securely fasten assembly to wall construction and building framing without distortion or stress.

D. Securely and rigidly brace components suspended from structure. Secure guides to structural members only.

E. Fit and align assembly including hardware; level and plumb, to provide smooth operation.

F. Coordinate installation of electrical service and functioning wiring from disconnect to unit components with the requirements of Division 26, Electrical.

3.03 ADJUSTING

A. Adjust grille, hardware and operating assemblies for smooth and noiseless operation.

3.04 COMMISSIONING

A. Commission doors in accordance with Section 01 91 13 - General Commissioning Requirements, Section 07 08 00 - Commissioning of Building Enclosure, and Section 08 08 00 - Commissioning of Openings.

B. Coordinate with Commissioning (Cx) Authority, Building Envelope Commissioning (BECxA) Authority and Contractor's Commissioning Coordinator.

3.05 CLEANING

A. Clean grille and components.

B. Touch-up, repair or replace damaged products before Substantial Completion.

C. Remove protective films, temporary labels, and visible markings.

END OF SECTION

SECTION 08 36 20

VERTICAL LIFT DOORS

PART 1 - GENERAL

1.01 SUMMARY

A. Section includes:

1. Requirements for the following:

a. Aluminum Vertical Lift Doors

b. Electric Operators and Controls.

c. Operating Hardware, tracks, and support.

1.02 REFERENCES

A. This Section incorporates by reference the latest revisions of the following documents.

1. ASTM International (ASTM):

a. ASTM A36/A36M - Standard Specification for Carbon Structural Steel

b. ASTM A924/A924M - Standard Specification for General Requirements for Steel Sheet, Metallic-Coated by the Hot-Dip Process

c. ASTM B221 - Standard Specification for Aluminum and Aluminum-Alloy Extruded Bars, Rods, Wire, Profiles, and Tubes

2. National Electrical Manufacturers Association (NEMA):

a. NEMA ICS 2 - Industrial Control and Systems – Industrial Control and Systems Controllers, Contractors and Overload Relays Rate 600 Volts.

b. NEMA MG 1 - Motors and Generators.

3. Underwriters Laboratories, Inc. (UL):

a. UL 325 - UL Standard for Safety Door, Drapery, Gate, Louver, and Window Operators and System

1.03 SUBMITTALS AND TRANSMITTALS

A. Submit the following:

1. Shop Drawings: Indicate plans and elevations including opening dimensions and required tolerances, connection details, and installation details.

B. LEED Submittals:

1. Where LEED certification is required by the project, submit the same documentation for approval as required by GBCI as a project submittal. Highlight the relevant LEED information.

2. LEED documentation is to be submitted separately and titled LEED SUBMITTAL.

3. Building Product Disclosure and Optimization credit data: Submit data to support the LEED SUBMITTAL.

C. Transmit the following:

1. Product Data: Manufacturer's data sheets on each product to be used, including:

a. Preparation instructions and recommendations.

b. Storage and handling requirements and recommendations.

c. Installation methods.

2. Manufacturer’s Certificates: Certify products meet or exceed specified requirements.

3. Operation and Maintenance Data.

4. Warranty.

1.04 QUALITY ASSURANCE

A. Manufacturer Qualifications: Company specializing in manufacturing products specified in this Section with minimum five years documented experience.

B. Installer Qualifications: Authorized representative of the manufacturer with minimum five years documented experience.

C. Products Requiring Electronic Connections: Listed and classified by Underwriters Laboratories, Inc. acceptable to authority having jurisdiction as suitable for purpose specified.

1.05 DELIVERY, STORAGE AND HANDLING

A. Protect materials from exposure to moisture until ready for installation.

B. Store materials in a dry location.

1.06 PROJECT CONDITIONS

A. Pre-Installation Conference: Convene a pre-installation conference just prior to commencement of field operations, to establish procedures to maintain optimum working conditions and to coordinate this work with related and adjacent work.

1.07 WARRANTY

A. Special Manufacturer’s Warranty: Manufacturer agrees to repair or replace:

1. Door and Operator components that fail in materials or workmanship withing Five (5) from date of Acceptance.

2. Counterbalance mechanisms failing or malfunctioning prior to reaching 20,000 cycles.

PART 2 - PRODUCTS

2.01 DESIGN / PERFORMANCE REQUIREMENTS

A. Wiring Connections Requirements for electrical characteristics:

1. Coordinate with electrical contractor to provide all wiring connections required for complete and functional door operation including motor, controls and Access Control System.

B. Single-Source Responsibility:

1. Provide doors, tracks, motors, and accessories from one manufacturer for each type of door.

2. Provide secondary components from source acceptable to manufacturer of primary components.

2.02 MANUFACTURERS

A. Basis of Design Manufacturer: Davis Door Service Inc.

B. Acceptable Manufacturers, Subject to compliance with requirements:

1. Amarr Doors.

2. EPD Electric Power Door.

3. International Door, Inc.

2.03 ALUMINUM VERTICAL LIFT DOOR

A. Aluminum Vertical Lift Door: Units shall have the following characteristics:

1. Door Assembly:

a. Fabricate vertical lift panels consisting of welded aluminum tube frame with sheet overlay.

b. Aluminum tube: ASTM B221 6063-T52.

c. Welded construction frame.

d. Mechanically attached perforated sheet selected from manufacturer's standard perforation patterns.

e. Steel shapes, plates and bars: ASTM A36.

2. Counterbalance System: Counterbalance door by means of roller chains, sprockets, and steel counterweights traveling in one common galvanized steel counterweight tower. This system uses heavy duty, 4 bolt cast flange bearings and solid keyed stress proof shafts.

3. Steel Structural Towers: 10 gauge hot dipped galvanized ASTM A924

4. Bottom of Door:

a. Manufacturer's standard, 2 wire, reversing electric sensing edge, bottom seal combination.

5. Finish and Color: Powder Coating Finish or Clear Anodized:

a. Color as indicated on drawings.

6. Wind Load Design: Provide to meet the design pressures as indicated on the structural drawings.

7. Locking: Panel locks to prevent lifting and bottom arrester/lifting catches.

8. Track: extruded aluminum to minimize contact with continuous UHMW guide strips, eliminating metal to metal contact, reducing noise and vibration. They will allow the door to breakaway in the event of impact with a vehicle.

9. Electric Motor Operation:

a. Industrial duty Hy Security HYS-Hydralift-20-UPS. Or approved Equal:

1) Opening speed: Min 12 inches per second with soft start and stop.

b. Sending Device Protection: Non-Contact Photoelectric sensing edge. Monitored to meet UL 325.

c. Operator Enclosure:

1) SST finish.

2) NEMA MG Type 4X.

d. Controls Station: Basis of Design:

1) Enclosure: Schneider Electric 9001KYSS3, NEMA 4 rated stainless steel control station.

2) Face plate: stainless steel engraved with OPEN-STOP-CLOSE.

3) Buttons: Schneider Electric 9001KR1BH13 NEMA 4 rated flush head push button. Recessed mounting.

4) Provide a Controls Station at both interior and exterior sides of the door if there is no adjacent man door. Provide at only interior location if there is an adjacent man door.

5) Provide access control card readers to avoid unauthorized operation.

10. Emergency Operation for egress:

a. Equip motorized vertical lift gates with on-board UPS system for emergency powered operation.

b. Provide at wall or post mounted “mushroom” button with hinged clear plastic cover to disengage motor operator and automatically open door for emergency egress when button is pressed. Locate the wall or post-mounted interior emergency exit button away from reach through the door:

1) No emergency exit button is required where an adjacent man door is provided with panic hardware.

c. Provide electric lock at bottom bar synchronized with emergency egress and Access Control functions.

11. Remote Monitoring and Control: Provide Remote Interface Terminal Strip inside the door control station for remote monitoring and control of vertical lift door:

a. Terminal blocks shall accept up to #14AWG wire.

b. Wire to left side of terminal blocks. Right side for remote interface terminations by others.

c. Two terminal blocks per monitoring or control.

d. Label blocks as shown in the table below.

e. Point functionality as defined in table below.

f. Wetting voltage nominally 24VDC.

Remote Interface Terminal Strip				
Type	Operation/PLC IO Description	Dry Contact Function		
		NO/NC	Open State	Close State
Status	Open-Maintained	NO	Not fully Opened	Fully Opened
Status	Closed-Maintained	NO	Not fully Closed	Fully Closed
Control	Permissive Command -from LCC or Lenel- (Momentary)	NO	No operation	Allow local door operation
Control	Open Command (Momentary)	NO	No operation	Open door
Control	Close Command (Momentary)	NO	No operation	Close door
Status	Intrusion Alarm (Momentary)	NC	Alarm	No operation

12. Additional Requirements:

a. Weather-stripping for exterior doors:

1) Provide manufacturer's standard track with continuous jamb angles and perimeter seals at head and jambs to achieve weather tight enclosure at jambs.

2) Provide manufacturer's standard replaceable vinyl or resilient rubber door bottom full-length.

PART 3 - EXECUTION

3.01 EXAMINATION

A. Do not begin installation until openings have been properly prepared.

B. Verify wall openings are ready to receive work and opening dimensions and tolerances are within specified limits.

C. Verify electric power is available and of correct characteristics.

3.02 PREPARATION

A. Clean surfaces thoroughly prior to installation.

B. Prepare surfaces using the methods recommended by the manufacturer for achieving the best result under the project conditions.

3.03 INSTALLATION

A. Install steel towers and aluminum vertical lift panels in accordance with approved shop drawings and the manufacturer's printed instructions.

B. Coordinate installation with adjacent work to ensure proper clearances and allow for maintenance.

C. Anchor assembly to wall construction and building framing without distortion or stress.

D. Fit and align door assembly including hardware.

E. Coordinate installation of electrical service. Complete power and control wiring from disconnect to unit components.

F. Instruct Owner's personnel in proper operating procedures and maintenance schedule.

3.04 ADJUSTING

A. Test for proper operation and adjust as necessary to provide proper operation without binding or distortion.

B. Adjust hardware and operating assemblies for smooth and noiseless operation.

3.05 COMMISSIONING

A. Commission doors in accordance with Section 01 91 13 - General Commissioning Requirements, Section 07 08 00 - Commissioning of Building Enclosure, and Section 08 08 00 - Commissioning of Openings.

B. Coordinate with Commissioning (Cx) Authority, Building Envelope Commissioning (BECxA) Authority and Contractor's Commissioning Coordinator.

3.06 CLEANING

A. Clean gates with non-abrasive materials and methods recommended by manufacturer.

B. Touch-up, repair or replace damaged products before Substantial Completion.

END OF SECTION

SECTION 08 71 00

DOOR HARDWARE

PART 1 - GENERAL

1.01 SUMMARY

A. Section includes:

1. Requirements for the following:

a. Hardware as indicated and specified herein for hollow steel, aluminum, and wood doors, including appropriate fasteners and miscellaneous materials required to complete the Work.

b. Hardware for fire-rated and non-rated doors.

c. Electrically operated and controlled hardware.

d. Lock cylinders for doors for which hardware is specified in other sections.

e. Thresholds.

f. Weather stripping, seals and door gaskets.

g. Latch guard plates.

h. Complete hardware schedule preparation. The drawings and specifications are indications of the design intent for the Project. Full provision of an itemized hardware schedule shall be the responsibility of the Contractor.

1.02 REFERENCES

A. This Section incorporates by reference the latest revision of the following documents:

1. American National Standards Institute (ANSI) / International Code Council (ICC):

a. ANSI/ICC A117.1 - American National Standard for Accessible and Usable Buildings and Facilities.

2. American National Standards Institute (ANSI) / Builders Hardware Manufacturers Association, Inc. (BHMA):

a. ANSI/BHMA A156.3 - Exit Devices.

b. ANSI/BHMA A156.6 - Architectural Door Trim.

c. ANSI/BHMA A156.16 - Auxiliary Hardware.

d. ANSI/BHMA A156.18 - Materials and Finishes.

e. ANSI/BHMA A156.22 - Gasketing.

f. ANSI/BHMA A156.23 - Electromagnetic Locks.

g. ANSI/BHMA A156.29 - Exit Locks, Exit Alarms, Alarms for Exit Devices.

h. ANSI/BHMA A156.31 - Electric Strikes and Frame Mounted Actuators.

3. Door and Hardware Institute (DHI):

a. DHI (LOCS) - Recommended Locations for Architectural Hardware for Standard Steel Doors and Frames.

4. National Fire Protection Association (NFPA):

a. NFPA 80 - Standard for Fire Doors and Other Opening Protectives.

b. NFPA 101 - Life Safety Code.

5. National Wood Window and Door Association:

a. NWWDA Industry Standard I.S.1.7 - Hardware Locations for Wood Flush Doors.

1.03 COORDINATION

A. Prior to installation of electronic hardware, arrange conference between Supplier, installers and related trades to review materials, procedures and coordinating related work.

B. Installation Templates: Distribute for doors, frames, and other work specified to be factory prepared. Check Shop Drawings of other work to confirm that adequate provisions are made for locating and installing door hardware to comply with indicated requirements.

C. Systems Integration: Coordinate all door hardware components necessary for completely functional door control and reporting systems.

1. Include manual locking, access control, intrusion detection, and fire alarm activated systems.

2. Coordinate layout and installation of electrified door hardware with power and communication connections required for their operation.

D. Safety and Security: Coordinate door hardware components specified in this Section with Owner's security consultant.

1.04 SUBMITTALS

A. Submit:

1. Hardware Schedules and Product Data:

a. Hardware schedules to be in vertical format, listing each door opening, and organized into "hardware sets" indicating complete designations of every item required for each door opening to function as intended. Note any special mounting instructions or requirements with the hardware schedule. Each schedule to include the following information:

1) Location of each hardware set shall be cross-referenced with on the door schedule on the drawings.

2) Handing and degree of swing of each door.

3) Door and frame sizes and materials.

4) Keying information.

5) Type, style, function, size, and finish of each hardware item.

6) Elevation drawings and operational descriptions for all electrified openings.

7) Name and manufacturer of each hardware item.

8) Fastenings and other pertinent information.

9) Explanation of abbreviations, symbols and codes contained in schedule.

10) Mounting locations for hardware when varies from standard.

11) Certificates of compliance with STC, smoke, and fire-rating requirements.

2. Submit catalog cuts and/or Product Data sheets for all scheduled finish hardware.

3. Submit separate detailed keying schedule for approval.

4. Templates:

a. Furnish a complete list and suitable templates, together with finish hardware schedule to Contractor, for distribution to necessary trades supplying materials to be prepped for finish hardware.

B. Samples:

1. Upon request, samples of each type of hardware in finish indicated shall be submitted. Samples are to remain undamaged and in working condition through submittal and review process. Items will be returned to the Supplier or incorporated into the work within limitations of keying coordination requirements.

2. Electronic Hardware Systems:

a. Provide complete wiring diagrams prepared by an authorized factory employee for each opening requiring electronic hardware, except openings where only magnetic hold-open devices are specified. Provide a copy with each hardware schedule submitted after approval.

b. Provide complete operational descriptions of electronic components listed by opening in the hardware submittals. Operational descriptions to detail how each electrical component functions within the opening incorporating all conditions of ingress and egress. Provide a copy with each hardware schedule submitted for approval.

c. Provide elevation drawings of electronic hardware and systems identifying locations of the system components with respect to their placement in the door opening. Provide a copy with each hardware schedule submitted for approval.

C. Transmit:

1. Qualifications:

a. Architectural Hardware Consultant.

b. Supplier.

2. Samples.

3. Templates.

4. Warranties.

1.05 QUALITY ASSURANCE

A. Qualifications:

1. Contractor to employ an Architectural Hardware Consultant to coordinate all the hardware requirements for the project including electrified hardware. The Consultant should be currently certified by DHI as an Architectural Hardware Consultant (AHC) or as an Electrified Hardware Consultant (EHC).

2. A recognized architectural door hardware Supplier who has maintained an office and has been furnishing hardware in the Project's vicinity for a period of at least two (2) years.

3. Hardware Supplier shall be an authorized factory distributor of all products specified herein.

1.06 DELIVERY, STORAGE AND HANDLING

A. Marking and Packaging:

1. Properly package and mark items according to the approved hardware schedule, complete with necessary screws and accessories, instructions and installation templates for spotting mortising tools. Contractor shall check deliveries against accepted list and provide receipt for them, after which he is responsible for storage and care. Any shortage or damaged good shall be made without cost to the Owner.

2. Packaging of door hardware is the responsibility of the Supplier. As hardware Supplier receives material from various manufacturers, sort and repackage in containers clearly marked with appropriate hardware set and door numbers to match the approved hardware Schedule. Two or more identical sets may be packed in same container.

B. Delivery:

1. Hardware Supplier shall coordinate delivery times and schedules with the Contractor for delivery of all door hardware. Inventory door hardware jointly with representatives of hardware Supplier and hardware installer/Contractor until each is satisfied that count is correct.

2. No keys, other than construction master keys and/or temporary keys are to be packed in boxes with the locks.

3. At time of hardware delivery, door openings Supplier in conjunction with the Contractor shall check in all hardware and set up a hardware storage room.

C. Storage:

1. Provide secure lock-up for door hardware delivered to the Project, but not yet installed. Control handling and installation of hardware items that are not immediately replaceable so that completion of work will not be delayed by hardware losses both before and after installation.

1.07 WARRANTY

A. All items, except as noted below, shall be warrantied in writing by the manufacturer against failure due to defective materials and workmanship for a minimum period of two

(2) years. In the event of product failure, promptly repair or replace item with no additional cost to the owner:

1. Mortise locksets: Five (5) years.

2. Integrated Access Controlled Mortise Locksets: Two (2) years.

3. Electromagnetic locks: Five (5) years.

4. Exit Devices: Five (5) years.

5. Integrated Access Controlled Exit Devices; Two (2) years.

6. Door closers: Twenty (20) years.

7. Securitron (and approved equals) electrified hardware: Lifetime.

8. Hinges and Continuous Hinges: Lifetime.

PART 2 - PRODUCTS

2.01 PERFORMANCE REQUIREMENTS

A. Fire-Rated Openings:

1. Provide door hardware for fire-rated openings that comply with NFPA 80 and requirements of authorities having jurisdiction. Provide only items of door hardware that are listed by Underwriter's Laboratories (UL) or Warnock Hersey (WH) for use on types and sizes of doors indicated.

2. Project requires door assemblies and components that are compliant with positive pressure and S-label requirements. Specifications shall be cross-referenced and coordinated with door manufacturers to ensure that total opening engineering is compatible with UL10C Standard for Positive Pressure Fire Tests of Door Assemblies.

B. Electronic Hardware:

1. The electrical products contained within this specification represent a complete engineered system. If alternate electrical products are submitted, it is the responsibility of the distributor to bear the cost of providing a complete and working system including re-engineering of electrical diagrams and system layout, as well as power transfers and all required electrical components. Coordinate with electrical engineer and electrician to ensure that line voltage and low voltage wiring is coordinated to provide a complete and working system.

2. For each item of electrified hardware specified, provide standardized molex plug connectors to accommodate up to twelve (12) wires. Molex plug connectors shall plug directly into through-door wiring harnesses, frame wiring harnesses, electric locking devices and power supplies.

3. Power supplies are to be provided by the access control subcontractor. Notify Resident Engineer of any proprietary power supply requirements for electronic hardware items provided.

4. For electronic hardware connected to Building Management System, confirm cybersecurity meets requirements of FAT test.

C. Means of Egress Doors:

1. Latches do not require more than 15 lbf to release the latch. Locks do not require use of a key, tool, or special knowledge for operation.

D. Accessibility Requirements: For door hardware on doors in an accessible route, comply with and ANSI/ICC A117.1:

1. Provide operating devices that do not require tight grasping, pinching, or twisting of the wrist and that operate with a force of not more than 5 lbf.

2. Comply with the following maximum opening-force requirements:

a. Interior, Non-Fire-Rated Hinged Doors: 5 lbf applied perpendicular to door.

b. Fire Doors: Minimum opening force allowable by authorities having jurisdiction.

3. Bevel raised thresholds with a slope of not more than 1:2. Provide thresholds not more than 1/2-inch high.

4. Adjust door closer sweep periods so that, from an open position of 90 degrees, the door will take at least 5 seconds to move to a position of 12 degrees from the latch.

5. Adjust spring hinges so that, from an open position of 70 degrees, the door will take at least 1.5 seconds to move to the closed position.

2.02 MANUFACTURERS

A. Obtain each type of finish hardware set (hinges, latch and locksets, access-controlled locks exit devices, access controlled exit devices, door closers, etc.) from a single manufacturer.

2.03 MATERIALS

A. All hardware installed for gates shall be 316 Stainless steel marine grade.

B. Screws and Fasteners:

1. All required screws shall be supplied as necessary for securing finish hardware in the appropriate manner. Thru-bolts shall be supplied for exit devices and door closers where required by code and the appropriate blocking or reinforcing is not present in the door to preclude their use.

C. Hanging Devices:

1. Hinges for Standard Doors:

a. Hinges shall conform to ANSI A156.1 and have the number of knuckles as specified, oil-impregnated bearings as specified with NRP (non-removable pin) feature, at all exterior reverse bevel doors. Unless otherwise scheduled, supply one (1) hinge for every 30 inches of door height, or fraction thereof (*). Hinges shall be a minimum of 4-1/2 inch high and 4- 1/2 inch wide; heavy weight hinges (.180) shall be supplied at all doors:

1) Approved manufacturers: McKinney, Ives, Hager, Best.

2. Continuous Stainless-Steel Hinges:

a. All hinges to be non-handed and of slim barrel design. Hinges to be made of type 304 stainless steel and shall have a concealed Teflon

coated stainless steel pin with twin self-lubricated nylon bearings at each knuckle. Hinges shall be UL listed up to and including 3 hours and shall be available with power transfer cutouts when necessary:

1) Approved Manufacturers: Markar, McKinney, Select, ABH.

3. Heavy Duty Gate Hinges:

a. Heavy Duty Gate Hinges shall be designed to be welded to gates and supports, with greaseable ball bearing movement and designed for supporting a single gate leaf weighing minimum 1200 pounds.

b. Comply with manufacturer's recommendations for weights and location of hinges:

1) Approved Manufacturers': Hardware Source, Crown Industrial, or approved equal.

D. Flush Bolts and Accessories:

1. All manual and automatic flush bolts to be furnished as specified:

a. Approved Manufacturers: Rockwood, McKinney, Trimco.

E. Cylinders and Keying:

1. Construction Cylinders:

a. Manufacturer: To match hardware.

2. Permanent Cylinders:

a. Provide for Sound Transit Link Light Rail Stations. Cylinders shall be high security tested, drill & pick proof, extreme attack configured, patent protected in U.S. and Canada, and include a unique double row of pins:

1) Approved Manufacturer: BiLock.

b. Provide for Parking Garages, Sounder and ST Express facilities. Cylinders shall be high security tested, patent protected in U.S. and Canada, 7-pin interchangeable cores:

1) Approved Manufacturer: Best-KABA Peaks.

3. Keying:

a. All locks and cylinders shall be provided with construction cylinders/cores, for use during the construction phase. All permanent cores shall be keyed to the existing KABA Peaks or BiLock Master key system, per the approved key schedule. All keys shall be serialized. Provide the following quantity of keys:

1) Two (2) change keys per lock.

2) Six (6) master keys per master level.

3) Five (5) construction/temporary keys.

4) Two (2) construction core control keys.

5) Two (2) operational control keys.

4. Cylinder Installation:

a. The general Contractor shall install all construction cylinders/cores at the time of hardware installation.

b. The Contractor shall provide all permanent cylinders/cores to Sound Transit no later than 90 days before install. At no time shall the Contractor be in possession of the final keyed cylinders or keys.

c. The Contractor shall coordinate with Sound Transit for the installation of the final keyed cylinders/cores. Installation of the permanent cylinders/cores will be performed by Sound Transit per the approved key schedule.

F. Locking Devices:

1. Mortise Locksets:

a. All locksets shall be ANSI 156.13 Series 1000, Grade 1 Certified. All functions shall be manufactured in a single sized case formed from 12-gauge steel minimum. The lockset shall have a field-adjustable, with a .125 inch minimum thickness and shall be reversible without opening the lock body. The lockset shall be 2 3/4 inch backset with a 3/4 inch stainless steel latchbolt. The deadbolt shall be a full 1 inch throw made of stainless steel. All strikes shall be non-handed with a curved lip. To ensure proper alignment, all trim, shall be thru-bolted and fully interchangeable between rose and escutcheon designs and shall be the product of one manufacturer.

1) Approved Manufacturers: Best 45H Series, Corbin ML Series, Schlage L series.

2. Electrified Locksets:

a. Mechanical features of electrified locksets shall conform to standards as specified above. Locksets shall be fail-secure unless otherwise specified. Where specified, provide electrified locksets shall be provided with a switch to monitor inside or outside lever handle or signal remote location:

1) Approved Manufacturers: Corbin Russwin, Schlage.

3. Integrated Access Control Locksets and Exit Device Trim:

a. Mechanical features of locksets shall conform to standards as specified above. Locksets shall be fail-secure unless otherwise specified. Locksets shall be provided with a request to exit switch to monitor inside lever handle. Integrated reader to be HID iClass with bit encryption which meets DOT minimum requirements and is compatible with the owners Lenel system. Reader application shall transmit both serial and data information. Provide all necessary cables, door position switches, components, power supplies, battery back-up, relays, firmware updates as necessary for a complete and operational system. Cards to be provided by others.

1) Approved Manufacturers: Corbin/Russwin LP10 Series, Schlage AD400, Best IDH max series.

4. Lockset Strikes:

a. Strikes shall be non-handed and available with curved lip, full lip or ASA type strikes as required. Provide strikes with lip-length required to accommodate jamb and/or trim detail and Projection.

G. Electrified Components:

1. Provide all hardware components necessary for complete, functioning electrically controlled and operated door systems.

2. Electric Strikes:

a. BHMA A156.31; Grade 1; with faceplate to suit lock and frame.

3. Power Transfer Devices:

a. Heavy duty electric power transfer devices to provide a concealed and secure means of transferring electric lock and exit device power and signal wires from the frame to the door.

b. Products to be completely concealed within the door frame.

4. Electromagnetic Locks:

a. Electromagnetic Locks: BHMA A156.23, with electromagnet attached to frame and armature plate attached to door.

b. Full-exterior or full-interior type, as required by application indicated.

H. Electrified Doors:

1. All doors required for the application of electronic locks, remote monitoring, door position switches, etc. which require the door to have wires through the door shall be provided pre-wired with a factory installed quick connect. The use of non-wired conduit in the door is not acceptable.

2. Provide all hollow metal frames receiving electrified hardware with through-frame wiring harness and concealed plug connectors on each end to accommodate up to twelve wires. Coordinate connectors on each end of the wiring harness to plug directly into the electrified hardware and the electric hinge.

I. Exit Devices:

1. Conventional Devices – Modern Push Pull Devices:

a. All exit devices shall be ANSI A156.3, Grade 1 Certified and shall be listed by Underwriters Laboratories and bear the UL label for life safety in full compliance with NFPA 80 and NFPA 101. Coordinate door style dimensions with exit device requirements. Provide request to exit switches and door contacts where integrated access control trim is utilized. Mounting rails shall be formed from a solid single piece of stainless steel, brass or bronze no less than 0.072 inch thick. Push rails shall be constructed of 0.062 inch thick material. Painted shall not be considered heavy duty and is not acceptable. Lever trim shall be available in finishes and designs to match that of the specified locksets.

1) Approved Manufacturer: Corbin, Precision 2000, Von Duprin.

J. Door and Gate Closers:

1. Surface-Mounted Closers – Heavy Duty:

a. All door closers shall be ANSI 156.4, Grade 1 Certified. All closers shall have cast iron bodies, forged steel arms, and separate valves for adjusting backcheck, closing and latching cycles and adjustable spring to provide up to 50 percent increase in spring power. Closers shall be furnished with parallel arms mounting on all doors opening into corridors or other public spaces and shall be mounted to permit 180 degrees door swing wherever wall conditions permit. Closers shall not be installed on exterior or corridor side of doors, where possible install closers on door for optimum aesthetics:

1) Approved Manufacturers: Corbin/Russwin DC6000 , Norton 7500, Best EDH9016, LCN 4000, Stanley QDC100.

b. Swing door Automatic Door Operators- Electromechanical Operators shall be self-contained unit powered by a minimum 3/16 horsepower, permanent-magnet DC motor: through a high torque reduction gear system:

1) Operation: Power opening and spring closing.

2) Operator Type: Low energy; readily convertible to full energy; no tools required to change type.

3) Handing: Non-handed; no tools required to change handing.

4) Capacity: Rated for door panels weighing up to 600 lb.

5) Approved Manufacturers: Assa Abloy, Dorma ED100LE.

2. Surface-Mounted, single action, Spring Hinge Closers:

a. Swing Gate Automatic Closer:

1) Operation: Manual pull to open, single action spring closer.

2) Handing: Non-handed; no tools required to change handing.

3) Capacity: Rated for Gates weighing up to 250 pounds (two spring hinges per leaf).

4) Approved Manufacturers:

a) Assa Abloy, Stanley, and approved equal.

K. Door Trim and Protective Plates:

1. Kick plates shall be .050 gauges and two (2) inches less full width of door, or as specified. All protective plates, door pulls and miscellaneous door trim shall be as shown in the hardware Schedule:

a. Approved Manufacturers: Rockwood, McKinney, Trimco.

2. Wall-mounted Door Stops:

a. Where a door is indicated on the plans to strike flush against a wall, wall bumpers shall be provided. Provide convex or concave design as indicated:

1) Approved Manufacturers: Rockwood, McKinney, Trimco.

3. Latch Guard Plates: Minimum 12-gauge 316 Stainless Steel, unless noted otherwise, with jamb pin. No exposed fasteners:

   a. Provide guard configuration appropriate to door swing and handing coordinated to fit latching hardware.

   b. Provide Latch guard and fasteners recommend by manufacturer for doors in curtain wall and storefront frames.

   c. Approved Manufacturers: Rockwood, McKinney, Hager.

4. Overhead Stops/Holders:

   a. Overhead stops/holders are to be provided. Track, slide, arm and jamb bracket shall be constructed of extruded bronze and shock absorber spring shall be of heavy tempered steel. Overhead stops shall be of non-handed design:

      1) Approved Manufacturers: Rixson, ABH.

L. Gasketing and Thresholds:

1. Provide continuous weather seal on exterior doors. Provide smoke, light, or sound seals on interior doors where indicated or as scheduled. Provide intumescent seals as required to meet UL10C Standard for Positive Pressure Fire Tests of Door Assemblies. Provide only those units where resilient or flexible seal strip is easily replaceable and readily available from stocks maintained by manufacturer.

   a. Smoke Seals: Self- extinguishing silicone, Smoke tested, UL10C.

   b. Intumescent Seals: Fire Rated- Edge Seals- UL10C.

   c. Acoustic Seals: Meeting ASTM E 90.

   d. Automatic Door Bottoms: Meeting the above standards for fire rated and acoustic openings as indicated or scheduled.

2. Door Gasketing: BHMA A156.22; with resilient or flexible seal strips that are easily replaceable and readily available from stocks maintained by manufacturer.

3. Maximum Air Leakage, Exterior Doors: When tested according to ASTM E 283/ E 283M with tested pressure differential of 0.3-inch wg, as follows:

   a. Gasketing on Single Doors: 0.3 cfm/sq. ft. of door opening.

   b. Gasketing on Double Doors: 0.50 cfm per foot of door opening.

4. Acoustical Assemblies:

   a. Provide sound gasketing and thresholds that comply with STC ratings indicated on the Drawings.

   b. Provide in accordance with the requirements of ASTM E 1289 when tested in accordance with ASTM E 90.

5. Smoke-Controlled Assemblies

   a. Provide smoke gasketing at doors in smoke barriers indicated on the Drawings.

b. Provide in accordance with the requirements of NFPA 105 when tested in accordance with UL 1784.

6. Thresholds: Provide threshold units not less than 4 inch wide, formed to accommodate change in floor elevation where indicated, fabricated to accommodate door hardware and to fit door frames. All threshold units shall comply with the Americans with Disabilities Act (ADA):

a. Approved Manufacturers: Pemko, Reese, Zero, National Guard.

M. Door Silencers:

1. Except at smoke-sealed, weather-stripped and acoustic-sealed doors, Resilient rubber, fitted into drilled hole; three on strike side of single door, three on center mullion of pairs, and two on each head of pairs without center mullions.

N. Exit Locks and Exit Alarms:

1. Exit Locks and Alarms: BHMA A156.29, Grade 1.

O. Manual Flush Bolts for Doors Not Used for Egress:

1. Manual Flush Bolts: BHMA A156.16; minimum 3/4-inch throw; designed for mortising into door edge.

P. Automatic and Self-Latching Flush Bolts:

1. Automatic Flush Bolts: BHMA A156.3, Type 25; minimum 3/4-inch throw; with dust-proof strikes; designed for mortising into door edge.

2. Self-Latching Flush Bolts: BHMA A156.3, Type 27; minimum 3/4-inch throw; with dust-proof strikes; designed for mortising into door edge.

Q. Exit Devices and Auxiliary Items:

1. Exit Devices and Auxiliary Items: BHMA A156.3.

R. Power Supplies:

1. Power supplies to be provided as part of the access control system unless otherwise specified.

2.04 ACCESSORIES FOR PAIRS OF DOORS

A. Coordinators: BHMA A156.3; consisting of active-leaf, hold-open lever and inactive-leaf release trigger; fabricated from steel with nylon-coated strike plates; with built-in, adjustable safety release.

B. Carry-Open Bars: BHMA A156.3; prevent the inactive leaf from opening before the active leaf; provide polished brass or bronze carry-open bars with strike plate for inactive leaves of pairs of doors unless automatic or self-latching bolts are used.

C. Astragals: BHMA A156.22.

2.05 METAL PROTECTIVE TRIM UNITS

A. Metal Protective Trim Units: BHMA A156.6; fabricated from 0.050-inch-thick stainless steel; with manufacturer's standard machine or self-tapping screw fasteners.

2.06 FINISHES

A. 630 Satin Stainless Steel finish required unless noted otherwise. Items specified in stainless steel should be provided in stainless steel with no exceptions.

B. The designations used in schedules and elsewhere to indicate hardware finishes are those listed in ANSI/BHMA A156.18 or traditional U.S. finishes shown by certain manufacturers for their products.

C. Provide quality of finish, including thickness of plating or coating (if any), composition, hardness, and other qualities complying with manufacturer's standards, but in no case less than specified by referenced standards for the applicable units of hardware.

D. Where specified hardware shall have an antimicrobial coating which permanently suppresses the growth of bacteria, algae, fungus, mold and mildew applied. The finish shall control the spread and growth of bacteria, mold and mildew and shall be FDA listed for use in medical and food preparation equipment.

PART 3 - EXECUTION

3.01 EXAMINATION

A. Contractor shall ensure that the building is secured and free from weather elements prior to installing interior door hardware. Examine hardware before installation to ensure it is free of defects.

B. Verify that doors and frames are ready to receive work; labeled, fire-rated doors and frames are present and properly installed, and dimensions are as indicated on shop drawings.

C. Verify that electric power is available to power-operated devices and of the correct characteristics.

3.02 INSTALLATION

A. Mount hardware units at heights indicated in the following applicable publications, except as specifically indicated or required to comply with the governing regulations:

1. DHI (LOCS) - Recommended Locations for Architectural Hardware for Standard Steel Doors and Frames.

2. NWWDA Industry Standard I.S.1.7

B. All hardware shall be applied and installed in accordance with best trade practice by an experienced hardware installer. Care shall be exercised not to mar or damage adjacent work.

C. Install each hardware item in compliance with the manufacturer's instructions and recommendations. Where cutting and fitting is required to install hardware onto or into surfaces that are later to be painted or finished in another way, coordinate removal, storage, and reinstallation or application of surface protection. Do not install surface-mounted items until finishes have been completed on the substrates involved.

D. Installer shall install all integrated access control cabling from locks and exit devices thru doors and frame and terminating at junction box (furnished and installed under this contract).

E. Special care shall be taken to coordinate installation of access-controlled doors installed in storefront and curtain wall applications to ensure concealed pathways are provided for cabling within aluminum frames.

F. Thresholds: Set thresholds for exterior doors in full bed of synthetic rubber sealant.

G. Stops: Provide floor stops for doors unless wall or other types of stops are indicated on the door hardware schedule. Do not mount floor stops where they will impede traffic or cause trip hazards.

H. Perimeter Gasketing: Apply to head and jamb, forming seal between door and frame.

I. Do not notch perimeter gasketing to install other surface-applied hardware.

J. Meeting Stile Gasketing: Fasten to meeting stiles, forming seal when doors are closed.

K. Door Bottoms: Apply to bottom of door, forming seal with threshold when door is closed.

3.03 FIELD QUALITY CONTROL

A. The Contractor shall do a final inspection prior to building completion to ensure that all hardware was correctly installed and is in proper working order.

B. Complete commissioning and testing of integrated access control and electrified hardware in accordance with Sound Transit requirements.

C. Refer to specification 08 08 00 for additional Commissioning and testing requirements.

3.04 ADJUSTING, CLEANING, AND DEMONSTRATING

A. Adjust and check each operating item of hardware and each door to ensure proper operation or function of every unit. Replace units that cannot be adjusted to operate freely and smoothly or as intended for the application made.

B. Clean operating items as necessary to restore to proper function and finish of hardware and doors. Adjust door control devices to compensate for final operation of heating and ventilating equipment.

C. Instruct owner's personnel in the proper adjustment and maintenance of door hardware and hardware finishes and usage of any electronic devices.

3.05 PROTECTION

A. Contractor shall protect all hardware, when stored on the construction site ensure that is in in a covered and dry place. Protect exposed hardware installed on doors during the construction phase.

3.06 DOOR HARDWARE GROUPS

A. Functionality of each door is indicated on the Door Schedules and the Security Drawings on the Issued for Construction Drawings.

B. Door hardware sets are as indicated in Hardware Schedule.

END OF SECTION

APPENDICES: (On Following Pages)

1. Appendix A – Hardware Schedule

APPENDIX A - HARDWARE SCHEDULE TEMPLATE

SECTION 08 71 00

MANUFACTURERS ABBREVIATIONS	
AA	Assa Abloy
AR	Adams Rite
BI	Bi Lock
BO	Bommer
CR	Corbin Russwin
LY	Lockey
MA	Makar
MC	McKinney
NA	National
PE	Pemko
RE	Reese
RO	Rockwood
RX	Rixson
SDC	SDC
SN	Securitron
VD	Von Duprin (Allegion)
ZE	Zero

To be completed by the design team

NOTES TO DESIGNER: Complete the hardware schedule by assigning appropriate hardware set #s and components to each door on the project. For doors with electronic components, fill in the sequence of operations. Manufacturer abbreviations are included in the table. Additional Manufacturers and abbreviations may be added as necessary. One example is completed for SET #1 below.

Refer to STRM set 801 for Security Groups. The appropriate Security Group must be designated for each hardware set. The commissioning and testing procedures in Standard Specification 08 08 00 are set by security group. Coordinate with the ST Specification owner for 08 08 00 for Testing and Commissioning Requirements.

EXAMPLE SET #1

Doors: [#]– Security Group [A]

HARDWARE	**MODEL #**	**FINISH**	**MFR**
* Hinges	T4A3386 NRP	*32D* *	MC
1 EPT (Power Transfer Hinge)	TA386-QC8 X 48 inch LEAD WIRE	32D	MC
EM Lock (Storeroom)	ML20905PSA	630	CR
1 Permanent Core	PI2301QC	26D	BL
1 Mortise Cylinder	5361QC X CC (VERIFY CAM)	26D	RO
1 Latch Protector	325	26D	RO
1 Flush Bolt (top)	555-24 inch	26D	RO
1 Flush Bolt (bottom)	555-12 inch	26D	RO
2 Overhead Stops (Surface)	9 SERIES	32D	RO
2 Kick Plates	K1050	32D	RO
1 Threshold	171AX FHSL25	A	PE
2 Gasket	S88D (HEAD & JAMB)		PE
1 Door Sweep	315CN		PE
1 Astragal	357SP X S88D X TB	US9	PE
2 Door Position Switches	DPS-M-GY		SN
Power Supply	Provided by Access Control Integrator		
Card Reader	Provided by Access Control Integrator		

SEQUENCE OF OPERATION:

- Normally locked on the pull side.
- Free egress at all times from the push side.
- Door open position switches (DPS) signal Security Systems when either leaf is open.
- Card Reader (Request to exit device) momentarily unlocks EM lockset (active leaf) and shunts DPS.

***Note For Finish:** Stainless steel is required per Article 2.04, unless otherwise indicated herein.

END OF APPENDICES

SECTION 08 80 00

GLAZING

PART 1 - GENERAL

1.01 SUMMARY

A. Section includes:

1. Requirements for glazing for the following:

a. Curtain wall and storefronts with sealed insulated units.

b. Curtain wall and storefront with single pane windows.

c. Elevator hoist way glazing.

d. Canopy and sloped glazing assemblies.

e. Doors with Vision Glass Inserts.

f. Smoke baffle assemblies.

g. Bird collision deterrent glazing.

h. Bullet-resistant glazing.

1.02 REFERENCES

A. This Section incorporates by reference the latest revisions of the following documents:

1. American Society for Testing and Materials International (ASTM):

a. ASTM C1021 – Standard Practice for Laboratories Engaged in Testing of Building Sealants.

b. ASTM C1036 – Standard Specification for Flat Glass.

c. ASTM C1048 - Standard Specification for Heat-Strengthened and Fully Tempered Flat Glass.

d. ASTM C1172 - Standard Specification for Laminated Architectural Flat Glass.

e. ASTM E1300 - Standard Practice for Determining Load Resistance of Glass in Buildings.

2. American Architectural Manufacturers Association (AAMA):

a. AAMA 800 Voluntary Specifications and Test Methods for Sealants.

3. Code of Federal Regulations (CFR):

a. 16 CFR 21 Part 1201 - Safety Standard for Architectural Glazing Materials.

b. 40 CFR 59 Subpart D - National Volatile Organic Compound Emission Standards for Architectural Coatings.

4. Glass Association of North America (GANA):

a. GANA (GM) Glazing Manual - Glass Association of North America.

5. American Bird Conservancy (ABC):

a. Bird Collision Deterrence Material Threat Factor Reference Standard.

b. Prescriptive Rating Guidelines for Bird-friendly Materials.

6. Underwriters Laboratories (UL):

a. UL 752 - Protection Standards for Bullet Resistant Glass.

B. Definitions

1. Glass Manufacturers: Firms that produce primary glass, fabricated glass, or both, as defined in referenced glazing publications.

2. Glass Thicknesses: Indicated by thickness designations in millimeters according to ASTM C1036.

3. IBC: International Building Code.

4. Laminated glazing: single lite consisting of two or more layers of glass with one or more interlayers as specified herein.

5. Single Pane: Lite consisting of single piece of glass or laminated glass with thickness specified.

6. Interspace: Space between lites of an insulating glass unit.

7. Insulating glass unit is abbreviated “IGU” on the Drawings.

8. Insulated Glass Unit & coating orientation:

a. Surface 1: Exterior surface of outer lite (surface facing outdoors of outboard lite).

b. Surface 2: Interior surface of outer lite (surface facing indoors of outboard lite).

c. Surface 3: Exterior surface of inner lite (surface facing outboard lite).

d. Surface 4: Interior surface of inner lite (surface facing indoors of inboard lite).

1.03 COORDINATION

A. Preinstallation Conference: Conduct conference at Project site:

1. Review and finalize construction schedule and verify availability of materials, Installer’s personnel, equipment, and facilities needed to make progress and avoid delays.

2. Review temporary protection requirements for glazing during and after installation.

1.04 SUBMITTALS

A. Product Data: For each glass product and glazing material indicated.

B. LEED Submittals:

1. Where LEED certification is required by the project, submit the same documentation for approval as required by GBCI as a project submittal. Highlight the relevant LEED information.

2. LEED documentation is to be submitted separately and titled LEED SUBMITTAL.

3. Building Product Disclosure and Optimization credit data: Submit data to support the LEED SUBMITTAL.

C. Samples: Minimum 12 inches square:

1. Two (2) samples of each type of glass indicated.

2. Graffiti-resistant plastic film applied to 1/4-inch clear glass. Leave 3-inch-wide section untreated. Comply with requirements for water and graffiti repellents, as stated elsewhere in the Contract Documents, for graffiti-resistant plastic film material requirements.

3. Smoke baffle components including 12-inch lengths of finished shoe, glazing gasket and cap.

D. Glazing Schedule: List glass types and thicknesses for each size opening and location. Use same designations indicated on Drawings.

E. Delegated-Design Submittal: For glass indicated to comply with performance requirements and design criteria, including analysis data signed and sealed by the qualified professional engineer, registered in the State of Washington, responsible for their preparation.

F. Mock-up: As specified in “Quality Assurance” Article herein.

G. Statement of Qualifications: For Installer.

1.05 QUALITY ASSURANCE

A. Glass:

1. Manufacturer Qualifications for Insulating-Glass Units with Sputter-Coated, Low-E Coatings: A qualified insulating-glass manufacturer who is approved and certified by coated glass manufacturer.

2. Installer Qualifications: A qualified Installer who employs glass Installers for this Project who are certified under the National Glass Association's Certified Glass Installer Program.

3. Glass Testing Agency Qualifications: A qualified independent testing agency accredited according to the NFRC CAP 1 Certification Agency Program.

4. Sealant Testing Agency Qualifications: An independent testing agency qualified according to ASTM C1021 to conduct the testing indicated.

5. Safety Glazing Labeling: Where safety glazing labeling is indicated, permanently mark glazing with certification label of the SGCC, another certification agency acceptable to the Building Code Official, or the manufacturer. Label shall indicate manufacturer's name, type of glass, thickness, and safety glazing standard with which glass complies.

6. Mock-Up: Provide a mock-up for evaluation of surface preparation techniques and application workmanship:

a. Finish areas designated by Resident Engineer.

b. Do not proceed with remaining work until workmanship, color, and sheen are approved.

c. Refinish mock-up area as required to produce acceptable work.

1.06 DELIVERY, STORAGE, AND HANDLING

A. Protect glazing materials according to manufacturer's written instructions. Prevent damage to glass and glazing materials from condensation, temperature changes, direct exposure to sun, or other causes.

B. Comply with insulating-glass manufacturer's written instructions for venting and sealing units to avoid hermetic seal ruptures due to altitude change.

1.07 PROJECT CONDITIONS

A. Environmental Limitations: Do not proceed with glazing when ambient and substrate temperature conditions are outside limits permitted by glazing material manufacturers and when glazing channel substrates are wet from rain, frost, condensation, or other causes:

1. Do not install glazing sealants when ambient and substrate temperature conditions are outside limits permitted by sealant manufacturer or are below 40 deg F (4.4 deg C).

1.08 PRECONSTRUCTION TESTING

A. Preconstruction Adhesion and Compatibility Testing: Test each glass product, tape sealant, gasket, glazing accessory, and glass-framing member for adhesion to and compatibility with elastomeric glazing sealants:

1. Testing is not required if data are submitted based on previous testing of current sealant products and glazing materials matching those submitted.

1.09 WARRANTY

A. Manufacturer's Special Warranty for Laminated Glass: Manufacturer agrees to replace laminated-glass units that deteriorate within specified warranty period. Deterioration of laminated glass is defined as defects developed from normal use that are not attributed to glass breakage or to maintaining and cleaning laminated glass contrary to manufacturer's written instructions. Defects include edge separation, delamination materially obstructing vision through glass, peeling and cracking, and blemishes exceeding those allowed by referenced laminated-glass standard:

1. Warranty Period: Ten years.

B. Special Warranty, Glass Seals: Provide a written warranty signed by the Manufacturer, the installer and the Contractor, agreeing to repair or replace glass sealing materials which have failed to provide airtight and watertight joints for any reason, or which appear to have failed in adhesion, cohesion, abrasion-resistance, migration-resistance, stain- resistance, general durability or other form of apparent deterioration (excluding inherent qualities and limitations clearly specified in the manufacturer’s data which was submitted):

1. Warranty Period: Ten years.

PART 2 - PRODUCTS

2.01 PERFORMANCE REQUIREMENTS

A. General: Installed glazing systems shall withstand normal thermal movement and wind and impact loads (where applicable) without failure, including loss or glass breakage attributable to the following: defective manufacture, fabrication, or installation; failure of sealants or gaskets to remain watertight and airtight; deterioration of glazing materials; or other defects in construction.

B. Delegated Design: Engage a qualified professional engineer, experienced in design of this Work and licensed in the State of Washington, to design glazing and seal drawings.

C. Structural Performance: Glazing shall withstand the design loads within limits and under conditions indicated determined according to the applicable code and ASTM E1300, unless otherwise indicated on the Issued for Construction Drawings:

1. Wind load: positive and negative (inward and outward) wind pressures shall be determined by basic wind speed criteria by code. Minimum pressures, except where code allows for less, shall not be less than 20 psf positive and negative.

2. Temperature change (range): 120 degrees f ambient; 180 degrees f material surfaces. Base calculations on materials actual surface temperature due to both solar heat gain and nighttime sky heat loss.

3. Center deflection: for the following types of glass supported on all four edges, provide thickness required that limits center deflection at of the edge of the glass perpendicular to the glass pane, based on design wind pressure, not to exceed 1/175 of the glass edge length or ¾ inch, whichever is less per Building Code.

D. Glass Thickness: Where glass thickness is indicated, it is a minimum. Provide glass that complies with performance requirements and is not less than the thickness indicated.

E. Safety Glazing: Where safety glazing is indicated, provide glazing that complies with 16 CFR 1201, Category II.

F. Thermal and Optical Performance Properties: Provide glass with performance properties specified, as indicated in manufacturer's published test data, based on procedures indicated below:

1. U-Factors: Center-of-glazing values, according to NFRC 100 and based on LBL's WINDOW 5.2 computer program, expressed as Btu/sq. ft. x h x deg F (W/sq. m x K).

2. Solar Heat-Gain Coefficient (SHGC) and Visible Transmittance (VT): Center-of-glazing values, according to NFRC 200 and based on LBL's WINDOW 5.2 computer program.

3. Visible Reflectance: Center-of-glazing values, according to NFRC 300.

G. Values for thermal and optical performance properties are as specified in “INSULATING GLASS PRODUCTS SCHEDULE” article herein. Where local code requirements conflict, the most stringent requirements apply.

2.02 GLASS TYPES SUMMARY

A. GL-1: 1/4-inch-thick clear tempered safety glass.

B. GL-2: GL-1 with graffiti-resistant film applied to one or two sides as indicated.

C. GL-2A: GL-1 with graffiti-resistant film applied to exposed side and Specular polyester security film applied to interior side at platform signage panel locations.

D. GL-3: 1/2-inch-thick translucent laminated glass:

1. Sloped Glazing and Overhead Canopy Assemblies: White, 65 percent light transmittance.

E. GL-4: 1/2-inch-thick clear laminated glass.

F. GL-5: 1/4-inch-thick clear laminated glass:

1. Vertical Clerestory glazing 12 feet or greater above finished floor.

G. GL-6: Insulated glazing units 1-inch overall thickness.

H. GL-6A: Insulated glazing unit with UV bird-collision deterrent pattern on surface 1.

I. GL-7: GL-6 with graffiti-resistant film applied to one or two sides as indicated.

J. GL-8: Insulated Glazing Unit with bird-collision deterrent, ceramic frit, and anti-graffiti film applied where indicated.

2.03 MATERIALS

A. Thickness: 1/4 inch unless indicated otherwise.

B. Glass Color: Clear, unless otherwise indicated.

C. Strength:

1. Where fully tempered glass is indicated, provide Kind FT heat-treated float glass unless specified otherwise.

D. Comply with published recommendations of glass product manufacturers and organizations below unless more stringent requirements are indicated. See these publications for glazing terms not otherwise defined in this Section or in referenced standards:

1. AAMA Publications: AAMA GDSG-1, "Glass Design for Sloped Glazing," and AAMA TIR A7, "Sloped Glazing Guidelines."

2. IGMA Publication for Sloped Glazing: IGMA TB-3001, "Guidelines for Sloped Glazing."

3. IGMA Publication for Insulating Glass: SIGMA TM-3000, "North American Glazing Guidelines for Sealed Insulating Glass Units for Commercial and Residential Use."

2.04 GLASS PRODUCTS SCHEDULE

A. Float Glass: ASTM C1036, Type I, Quality-Q3, Class I (clear) unless otherwise indicated.

B. Tempered Glass: ASTM C1048; Type I; Quality-Q3; Class I (clear) unless otherwise indicated; of kind and condition indicated:

1. Fabrication Process: By horizontal (roller-hearth) process with roll-wave distortion parallel to bottom edge of glass as installed unless otherwise indicated.

2. For uncoated glass, comply with requirements for Condition A.

3. All tempered glass is to be heat soaked. Provide documentation that all tempered glass has been treated.

C. Laminated Glass:

1. ASTM C1172, kind and thickness as scheduled, Class 1 (clear):

   a. Fully tempered: Kind LFT.

2. Interlayer Material: 0.06-inch polyvinyl butyryl:

   a. Provide thickness not less than 0.06 for sloped glazing canopy assemblies:

      1) Product: Ionoplast by DuPont Glass Laminating Solutions

   b. Color: As indicated:

      1) GL-3: Viracon “Arctic Snow” or approved equal.

      2) GL-4, GL-5: Clear.

3. Laminating Process: Fabricate laminate glass using laminator’s standard heat- plus pressure process to produce glass free from foreign substances and air/glass pockets.

4. Construction:

   a. GL-3, GL-4: 1/4-inch clear glass, interlayer, 1/4-inch clear glass.

   b. GL-5: 1/8-inch clear glass, interlayer, 1/8-inch clear glass.

D. Insulating Glazing Units:

1. GL-6, GL-6A, GL-7: 2 layers clear ¼-inch tempered glass surrounding air space. Total thickness 1 inch. Low-E coating as required to meet performance requirements:

   a. GL-6A: Where bird deterrence is indicated and surface 1 (exterior face) is outside of the touch zone: Provide UV bird-visible pattern complying with ABC, Prescriptive Rating Guidelines for Bird Friendly Materials on surface 1, Low-E coating on surface 2:

      1) Basis of design: Pilkington AviSafe Suncool 70/35.

      2) Pattern Complying with ABC Threat Factor <_ 12.

      3) Overall reflectance of system including anti-graffiti film ≤ 15 percent.

   b. Where both bird deterrence and anti-graffiti film are required by the Contract Documents refer to GL-8.

2. GL-8: 2 layers ¼-inch clear tempered glass surrounding air space with ceramic frit pattern on surface 2 complying with ABC, Prescriptive Rating Guidelines for Bird Friendly Materials; Low-E coating as required to meet performance requirements on surface 3 Total thickness 1 inch. Anti-graffiti film applied where indicated:

   a. Pattern Complying with ABC Threat Factor <_ 30.

   b. Overall reflectance of system including anti-graffiti film <= 15 percent.

   c. Assembly Maximum U factor:

      1) Fixed units: 0.38

      2) Operable units: 0.40

3) Comply with locally adopted building codes where more stringent requirements apply.

d. Assembly Maximum Solar Heat Gain Coefficient (SHGC):

1) 0.40 at units.

2) Comply with locally adopted building codes where more stringent requirements apply.

e. Visual Light Transmittance: 1.1 times SHGC.

3. Bullet- Resistant Glazing:

a. Where indicated on the contract documents, provide bullet-resistant glazing tested and certified per UL 752 - Level 3.

b. Laminated non-splinter glass-clad polycarbonate.

c. Where the thickness of bullet-resistant glazing conflicts with the specified glazing construction, the thickness of the bullet-resistant construction shall govern.

d. Where used as part of an IGU and in aluminum-glazed curtain wall, or storefront systems. the entire system shall be rated per UL 752.

E. Standard Glazing Unit Dimensions: Provide glass units in the following sizes, applicable to the applications indicated:

1. Standard Glazing Unit Sizes for Canopy / Elevator shaft:

a. 23-1/2 by 47-1/2 inches.

b. 29-1/2 by 47-1/2 inches.

c. 47-1/2 by 47-1/2 inches.

d. 33-1/2 by 71-1/2 inches.

2. Standard Glazing Unit Sizes for Windscreen / Elevator Shaft Glazed Assemblies:

a. 33 by 47 inches.

b. 33 by 33 inches.

c. 47 by 47 inches.

2.05 GLAZING ACCESSORIES

A. Expanded Cellular Glazing Tapes: Closed-cell, PVC foam tapes; factory coated with adhesive on both surfaces; and complying with AAMA 800 for the following types:

1. AAMA 810.1, Type 1, for glazing applications in which tape acts as the primary sealant.

B. Sealants:

1. Structural Glazing Sealant: Comply with requirements for structural-sealant- glazed components, as stated elsewhere in the Contract Documents.

2. Use sealants that have a VOC content of 50 grams per liter or less when calculated according to 40 CFR 59, Subpart D (EPA Method 24).

C. Cleaners, Primers, and Sealers: Types recommended by sealant or gasket manufacturer.

D. Setting Blocks: Neoprene, 80 to 90 Durometer shore A hardness; minimum 4 inches long, per GANA Glazing Manual.

E. Spacers: Elastomeric blocks or continuous extrusions with a Shore A durometer hardness required by glass manufacturer to maintain glass lites in place for installation indicated.

F. Shims: Provide aluminum shims as required for use beneath neoprene setting blocks to maintain proper alignment of space bar along sight line.

G. Edge Blocks: Elastomeric material of hardness needed to limit glass lateral movement (side walking).

H. Edge Protection: Provide continuous aluminum bar stock, size as indicated, with clear anodized finish, adhered to edge of glass with structural silicone sealant, to protect the interlayer of laminated glass from moisture.

2.06 GLAZING SURFACE FILMS

A. Comply with requirements for glazing surface films as stated in Section 08 87 00 - Glazing Surface Films.

2.07 FABRICATION OF GLAZING UNITS

A. Fabricate glazing units in standard sizes indicated. Where non-standard sizes are indicated, fabricate glazing units in sizes required to fit openings indicated:

1. Provide units with edge and face clearances, surface conditions, and bite complying with written instructions of product manufacturer and referenced glazing publications, to comply with system performance requirements.

B. Clean-cut or flat-grind vertical edges of butt-glazed monolithic lites to produce square edges with slight chamfers at junctions of edges and faces.

C. Exposed glass edges and corners: Grind smooth and polish.

D. Butt jointed glass panels: Grind smooth and polish glass edges.

2.08 SMOKE BAFFLE ASSEMBLIES

A. Description: Exposed aluminum soffit-mounted shoe with concealed vinyl cap rail for glass, concealed stainless steel bolt through glass and glazing grommets and gaskets. Include soffit anchors sized to support imposed loads. Shoe sized to glass thickness indicated.

B. Glass-to-Glass Joints: 1/2 wide, filled with CRL Water Clear Silicone Sealant.

C. Shoe Finish: Mill finish, unless otherwise indicated.

D. Basis of Design: CRL B5B Series Smoke Baffle by C.R. Laurence Architectural Products.

PART 3 - EXECUTION

3.01 EXAMINATION

A. Examine framing, glazing channels, and stops, with Installer present, for compliance with the following:

1. Manufacturing and installation tolerances, including those for size, squareness, and offsets at corners.

2. Presence and functioning of weep systems.

3. Minimum required face and edge clearances.

4. Effective sealing between joints of glass-framing members.

B. Proceed with installation only after unsatisfactory conditions have been corrected.

3.02 PREPARATION

A. Clean glazing channels and other framing members receiving glass immediately before glazing. Remove coatings not firmly bonded to substrates.

B. Examine glazing units to locate exterior and interior surfaces. Label or mark units as needed so that exterior and interior surfaces are readily identifiable. Do not use materials that will leave visible marks in the completed work.

3.03 GLAZING, GENERAL

A. Comply with combined written instructions of manufacturers of glass, sealants, gaskets, and other glazing materials, unless more stringent requirements are indicated, including those in referenced glazing publications.

B. Protect glass edges from damage during handling and installation. Remove damaged glass from Contract site and legally dispose of off Contract site. Damaged glass is glass with edge damage or other imperfections that, when installed, could weaken glass and impair performance and appearance.

C. Install setting blocks in sill rabbets, sized and located to comply with referenced glazing publications, unless otherwise required by glass manufacturer. Set blocks in thin course of compatible sealant suitable for heel bead.

D. Provide spacers for glass lites where length plus width is larger than 50 inches:

1. Locate spacers directly opposite each other on both inside and outside faces of glass. Install correct size and spacing to preserve required face clearances, unless gaskets and glazing tapes are used that have demonstrated ability to maintain required face clearances and to comply with system performance requirements.

2. Provide 1/8-inch minimum bite of spacers on glass and use thickness equal to sealant width. With glazing tape, use thickness slightly less than final compressed thickness of tape.

E. Provide edge blocking where indicated or needed to prevent glass lites from moving sideways in glazing channel, as recommended in writing by glass manufacturer and according to requirements in referenced glazing publications.

F. Set glass lites in each series with uniform pattern, draw, bow, and similar characteristics.

3.04 TAPE GLAZING

A. Position tapes on fixed stops so that, when compressed by glass, their exposed edges are flush with or protrude slightly above sightline of stops.

B. Install tapes continuously, but not necessarily in one continuous length. Do not stretch tapes to make them fit opening.

C. Place joints in tapes at corners of opening with adjoining lengths butted together, not lapped. Seal joints in tapes with compatible sealant approved by tape manufacturer. Do not remove release paper from tape until right before each glazing unit is installed.

D. Apply heel bead of elastomeric sealant.

3.05 STRUCTURAL SILICONE GLAZING

A. Clean, prime and mask at structural silicone joints during the same work day on which the silicone is applied.

B. Temporarily clamp glass during cure of structural silicone. After sufficient cure, remove clamps and fill any gaps in silicone.

C. Mask glass and aluminum during application of structural silicone. Remove masking immediately after tooling sealant.

D. Seal exterior flush joints at structural silicone conditions with silicone sealant specified herein.

E. Do not apply structural silicone to edges of insulating glass units, or to edges of laminated glass units. Do not adhere to, or place against, the edge of laminated glass unit interlayer, sealants used as weather seals.

3.06 GRAFFITI RESISTANT FILM APPLICATION

A. Comply with requirements for water and graffiti repellents as stated elsewhere in the Contract Documents.

3.07 SMOKE BAFFLE INSTALLATION

A. Install in accordance with Shop Drawings and manufacturer's written instructions.

B. Tool seal glass-to-glass joints and vertical perimeter joints with sealant to uniform profile.

3.08 CLEANING AND PROTECTION

A. Protect glass from contact with contaminating substances resulting from construction operations. If, despite such protection, contaminating substances do come into contact with glass, remove substances immediately as recommended in writing by glass manufacturer.

B. Remove and replace glass that is broken, chipped, cracked, or abraded or that is damaged from natural causes, accidents, and vandalism, during construction period.

C. Wash glass on both exposed surfaces in each area of Contract not more than four (4) days before date scheduled for inspections that establish date of Acceptance. Wash glass as recommended in writing by glass manufacturer.

END OF SECTION

SECTION 08 87 00

GLAZING SURFACE FILMS

PART 1 - GENERAL

1.01 SUMMARY

A. Section includes:

1. Requirements for surface preparation and application of the following:

a. Graffiti-resistant films:

1) New glazing: factory or shop-applied to glazing before installation in frames.

2) Field-Applied to existing glazing assemblies.

b. Privacy Film.

1.02 REFERENCES

A. This Section incorporates by reference the latest revisions of the following documents:

1. American National Standards Institute (ANSI):

a. ANSI Z97.1 - American National Standard for Safety Glazing Materials Used in Buildings - Safety Performance Specifications and Methods of Test.

2. American Society for Testing and Materials International (ASTM):

a. ASTM D1044 - Standard Method of Test for Resistance of Transparent Plastics to Surface Abrasion (Taber Abrader Test).

b. ASTM E84 - Standard Method of Test for Surface Burning Characteristics of Building Materials.

1.03 SUBMITTALS

A. Product Data: Manufacturer's data sheets on each product to be used, including:

1. Preparation instructions and recommendations.

2. Storage and handling requirements and recommendations.

3. Installation methods.

B. LEED Submittals:

1. Where LEED certification is required by the project, submit the same documentation for approval as required by GBCI as a project submittal. Highlight the relevant LEED information.

2. LEED documentation is to be submitted separately and titled LEED SUBMITTAL.

3. Building Product Disclosure and Optimization credit data: Submit data to support the LEED SUBMITTAL.

C. Samples: Provide graffiti-resistant film samples as part of Submittals requirements specified in glazing as stated elsewhere in the Contract Documents.

D. Shop Drawings: Detail installation of film, anchoring accessories, and sealant. Indicate type and location for each type of film to be installed.

E. Manufacturer's Installation Instructions: Indicate special procedures and conditions requiring special attention; cautionary procedures required during application.

F. Test sample, and field inspection reports.

G. Installer Qualification Data: From manufacturer, indicating Applicator complies with requirements.

H. Maintenance Data: Graffiti removal and cleaning instructions, written and video or digital medium showing cleaning procedure, including recommended proprietary products.

1.04 QUALITY ASSURANCE

A. Source Limitations: Obtain all surface film materials through one (1) source from a single manufacturer. Provide secondary materials as cleaners recommended by manufacturer of primary materials.

B. Graffiti-Resistant Plastic Film Installer Qualifications:

1. Single Installer with a minimum of 5 years demonstrated experience in installing products of the same type and scope as specified, as well as trained and approve by the manufacturer for products indicated:

a. Provide a commercial building reference list of five (5) properties where the installer has applied window film. Include the following Information:

1) Name of Building.

2) The name and telephone number of a management contact.

3) Type of glass.

4) Type of film.

5) Account of film installed.

6) Date of completion

2. Mock-Up:

a. Provide mock-up of films with glazing mock-ups as directed in 08 80 00.

1.05 EXTRA MATERIALS

A. Maintenance Materials: Provide extra materials for Owner's maintenance. Materials shall be same quality, model and manufacture as specified materials, in sealed unopened. Containers, with shelf life indicated and instructions for use. Verify quantities with Resident Engineer before delivery:

1. Graffiti-Resistant Film for Glass: Ten percent of quantity installed.

2. Security and Safety film: Ten percent of quantity installed.

3. Privacy Film: Ten percent of quantity installed.

1.06 PROJECT CONDITIONS

A. Maintain environmental conditions (temperature, humidity, and ventilation) within limits recommended by manufacturer for optimum results. Do not install products under environmental conditions outside manufacturer's absolute limits.

B. Weather and Substrate Conditions: Do not proceed with application of film when the following conditions exist, unless otherwise indicated in manufacturer's written instructions:

1. Ambient temperature is less than 40 degrees Fahrenheit or above 100 degrees Fahrenheit.

2. When rain or temperatures below 40 degrees Fahrenheit are predicted for a period of 24 hours, or earlier than three (3) days after surfaces become wet from rainfall or other moisture sources.

3. When substrate is frozen, or at surface temperature of less than 40 degrees Fahrenheit.

4. When winds are sufficient to carry airborne chemicals to unprotected surfaces or adjacent properties or would cause an improper application rate.

1.07 WARRANTY

A. At project closeout, provide to Contracting Agency an executed current copy of the manufacturer's standard limited warranty against manufacturing defect, outlining its terms, conditions, and exclusions from coverage.

B. Anti-graffiti films are warranted for a period of 1 year when installed outdoors and for a period of 10 years when installed indoors.

PART 2 - PRODUCTS

2.01 PERFORMANCE REQUIREMENTS

A. Flammability: Surface burning characteristics when tested in accordance ASTM E84:

1. Flame Spread Index: 25 maximum.

2. Smoke Developed Index: 450 maximum.

B. Abrasion Resistance: Film must have a surface coating that is resistant to abrasion such that, less than 5 percent increase of transmitted light haze will result in accordance with ASTM D 1044 using 50 cycles, 500 grams weight, and the CS10F Calibrase Wheel.

C. Safety/Security Film Impact Performance:

1. Meets ANSI Z97.1 Class B and 16 CFR 1201 Category I 150 ft-lbs. impact resistance.

D. Meets accelerated weathering requirements in accordance with ANSI Z97.1.

2.02 MATERIALS

A. Compatibility: Repellent and coating materials shall be compatible with substrate surfaces and other materials they are in contact with.

B. Maximum VOC Content: Comply with referenced Washington State Air Quality Rules and Laws.

2.03 SACRIFICIAL GRAFFITI-RESISTANT FILM FOR GLASS

A. Description: Graffiti resistant film applied to all exposed glass surfaces in the Touch Zone. Refer to Sound Transit Requirements Manual for definition of Touch Zone:

1. Sacrificial coating composed of three layers of 2-mil polyester (PET) laminated together.

2. Optically-clear and distortion-free coating, which when applied, provides a significant resistance to etching and scratching of underlying surface.

B. Acceptable Product:

1. Vandal Shield, Graffiti Removals, Inc., “VS-1200”.

2. 3M, “Anti-Graffiti 6.”

2.04 ACCESSORIES

A. As recommended or required by film manufacturer.

B. Glass Cleaner: As recommended by film manufacturer.

PART 3 - EXECUTION

3.01 EXAMINATION

A. Verify existing conditions before starting work, including:

1. Surfaces to be coated are dry, clean, and free of efflorescence, oil, or other material detrimental to performance of work.

B. Inspect surfaces in presence of repellent manufacturer's authorized technical representative and Applicator.

C. Do not proceed with treatment application until unsatisfactory conditions have been corrected.

3.02 GRAFFITI-RESISTANT FILM APPLICATION

A. Shop-Applied for New Glazing:

1. Apply film per manufacturer’s instructions in shop, prior to installation in frames.

2. Allow sufficient time in schedule for film to cure prior to installation or transportation to site.

B. Field - Applied Film for Existing Glazing:

1. Preparation:

a. Clean glass of dust, dirt, paint, oil, grease, mildew, mold, and other contaminants that would inhibit adhesion.

b. Immediately prior to applying film, thoroughly wash glass with neutral cleaning solution.

c. Protect adjacent surfaces.

d. Do not begin installation until substrates have been properly prepared.

e. Prepare surfaces using the methods recommended by the manufacturer for achieving the best result for the substrate under the project conditions.

2. Installation:

a. Install film in accordance with manufacturer's instructions, without air bubbles, wrinkles, seams, pinholes, or gaps, as required to achieve specified performance.

b. Cut film edges neatly and square at a uniform distance of 1/8 inch to 1/16 inch of window sealant. Use new blade tips after three to four cuts.

c. Spray the slip solution, composed of one capful of baby shampoo or dishwashing liquid to one gallon of water, on window glass and adhesive to facilitate proper positioning of film.

d. Apply film to glass and lightly spray film with slip solution.

e. Squeegee from top to bottom of window. Spray slip solution to film and squeegee a second time.

f. Bump film edge with lint-free towel wrapped around edge of a five-way tool.

3. Post-Application:

a. Upon completion of film application, allow 30 days for moisture from film installation to dry thoroughly, and to allow film to dry flat with no moisture dimples when viewed under normal viewing conditions.

b. After application of film, wash film using common window cleaning solutions, including ammonia solutions, 30 days after application. Do not use abrasive type cleaning agents and bristle brushes to avoid scratching film. Use synthetic sponges or soft cloths.

3.03 PROTECTION OF FINISHED WORK

A. Protect treated surfaces from scuffing, abrasion and marring from adjacent work.

B. Replace damaged products before Date of Acceptance.

C. Remove labels and protective covers at completion of project.

3.04 SCHEDULE OF APPLICATIONS

A. Anti-Graffiti Films:

1. Apply to glass surfaces within 8 feet of finish floor or grade where surfaces are accessible to general public (touch zone).

2. When height of glass surface exceeds 8 feet, extend film material to top of the next horizontal mullion.

B. Privacy Film:

1. Apply to interior (secure) surfaced of glazing within 8 feet of finish floor which provides a view into security offices, employee areas, as indicated on the Issued for Construction Drawings.

2. When height of glass surface exceeds 8 feet, extend film material to top of the next horizontal mullion.

END OF SECTION

SECTION 08 91 00

LOUVERS

PART 1 - GENERAL

1.01 SUMMARY

A. Section includes:

1. Requirements for the following:

a. Fixed metal louvers, frames, and accessories for wall openings and screen assemblies.

b. Combination fixed and operable metal louvers.

c. Blank-off panels for wall louvers.

d. Insect screens.

1.02 REFERENCES

A. This Section incorporates by reference the latest revisions of the following documents.

1. Air Movement and Control Association International, Inc. (AMCA):

a. AMCA 500-D - Laboratory Methods of Testing Dampers for Rating.

b. AMCA 500-L - Laboratory Methods of Testing Louvers for Rating.

c. AMCA 511 - Certified Program Product Rating Manual for Air Control Devices.

2. American Society for Testing and Materials International (ASTM):

a. ASTM B221 - Standard Specification for Aluminum and Aluminum-Alloy Extruded Bars, Rods, Wire, Profiles, and Tubes.

b. ASTM D1187/D1187M - Standard Specification for Asphalt-Base Emulsions for Use as Protective Coatings for Metal.

c. ASTM E488/E488M - Standard Test Methods for Strength of Anchors in Concrete Elements.

1.03 COORDINATION

A. Coordinate the work of this Section with the work of interfacing systems and materials including, but not limited to:

1. Cladding or masonry joint dimensions, joint alignment layouts, finishes, and attachment details.

2. Sheet metal flashings associated with wall panel and louver systems.

3. Mechanical systems such as HVAC, utilizing louvers for exhaust or intake, for coordination of blank-off panel sizes and locations.

4. Electrical services to motorized devices.

5. Metal stud framing, for coordination of partition wall locations with blank-off panels.

1.04 SUBMITTALS

A. Submit:

1. Shop Drawings: Indicate louver layout plan and elevations, opening and clearance dimensions, tolerances; head, jamb and sill details; blade configuration, screens, blanked out areas required, and frames, and coordinated flashings and sealants for continuity of building envelope.

2. Coordination Drawings: Provide exterior elevations, drawn to scale, on which the following elements shown and coordinated with each other.

3. Product Data: Provide data describing design characteristics, maximum recommended air velocity, design free area, materials and finishes:

a. Clearly illustrate elements, including attachment and bracing members, methods employed to assure performance integrity of the exterior enclosure system, and the component's relationship to surrounding work, including dimensional tolerances and bench mark locations to be met.

b. Show weep paths, gaskets, flashing, sealant, and other means of preventing water intrusion.

c. Wiring Diagrams: For power, signal, and control wiring for motorized operable louvers.

d. Coordinate and submit shop drawings with the following work as stated elsewhere in the Contract Documents:

1) Sheet metal flashing and trim.

2) Glazed aluminum-framed storefronts and curtain walls.

e. Metal wall panels.

f. Louvers.

g. Exterior openings including doors and windows.

h. Sun shading devices.

i. Light fixtures.

j. Penetrations of walls by pipes and utilities.

4. LEED Submittals:

a. Where LEED certification is required by the project, submit the same documentation for approval as required by GBCI as a project submittal. Highlight the relevant LEED information.

b. LEED documentation is to be submitted separately and titled LEED SUBMITTAL.

c. Building Product Disclosure and Optimization credit data: Submit data to support the LEED SUBMITTAL.

5. Samples: Submit two samples 6-inches by 6-inches in size illustrating finish of exterior and interior surfaces.

6. Test Reports: Independent Testing Laboratory reports showing compliance with specified performance criteria.

7. Manufacturer's Certificate: Certify that products meet or exceed specified requirements.

8. Maintenance Data: Include lubrication schedules, and adjustment requirements.

9. Mockup: As specified in “Quality Assurance” Article herein

1.05 QUALITY ASSURANCE

A. Single Source Responsibility: Provide louvers from a single source.

B. Manufacturer Qualifications: Company specializing in manufacturing products of the type specified in this Section, with minimum three (3) years of documented experience.

C. AMCA Seal: Mark units with AMCA Certified Ratings Seal.

D. Mockups: Build mockups to verify to demonstrate aesthetic effects of louvers, integration with surrounding wall finish or cladding system, and set quality standards for fabrication and installation:

1. Build mockup of typical louver, surrounded on all sides by wall finish system. Include typical flashings and trim.

2. Approval of mockups does not constitute approval of deviations from the Contract Documents contained in mockups unless Architect specifically approves such deviations in writing.

3. Mock-up, if approved by Resident Engineer, may remain as part of the Work if undisturbed at time of Substantial Completion.

1.06 PROJECT CONDITIONS

A. Field Measurements: Check actual louver openings by accurate field measurements before fabrication; show recorded measurements on final shop drawings. Coordinate fabrication schedule with construction progress to avoid delay of the Work. Where field measurements cannot be made without delaying the Work, guarantee opening dimensions and proceed with fabrication of louvers without field measurements. Coordinate wall construction to ensure that actual opening dimensions correspond to guaranteed dimensions.

B. Weather Limitations: Proceed with installation only when existing and forecasted weather conditions permit assembly of louvers to be performed according to manufacturers' written instructions and warranty requirements.

1.07 WARRANTY

A. Special Warranty on Panel Finishes: Manufacturer's standard form in which manufacturer agrees to repair finish or replace louvers that show evidence of deterioration of factory- applied finishes within specified warranty period:

1. Exposed Panel Finish: Deterioration includes, but is not limited to, the following:

    a. Color fading more than 5 Hunter units when tested according to ASTM D2244.

    b. Chalking in excess of a No. 8 rating when tested according to ASTM D4214.

    c. Cracking, checking, peeling, or failure of paint to adhere to bare metal.

2. Finish Warranty Period: 20 years from date of Substantial Completion.

PART 2 - PRODUCTS

2.01 PERFORMANCE REQUIREMENTS

A. AMCA Certified: In accordance with AMCA 511.

B. Structural Performance: Design, engineer, fabricate, and install exterior metal wall louvers to withstand the effects of loads and stresses from wind and normal thermal movement, without evidencing permanent deformation of louver components including blades, frames, and supports; noise or metal fatigue caused by louver blade rattle or flutter; and permanent damage to fastener and anchors:

1. Wind Load: Uniform pressures (velocity pressures) indicated on Issued for Construction Drawings, acting inwards or outwards.

2. Deflection Limits: For wind loads, no greater than L/240 of the span.

3. Louver Analysis: Provide louver calculations to verify louver will withstand design wind loads indicated without detrimental effects or deflection:

    a. Include effects of thermal differential between the exterior and interior facings and resistance to fastener pullout.

C. Louver Performance Ratings: Provide louvers complying with requirements specified, as demonstrated by testing manufacturer's stock units identical to those provided, except for length and width according to AMCA 500-L.

D. Seismic Performance: Louvers, including attachments to other construction, shall withstand the effects of earthquake motions determined according to applicable code.

E. Thermal Movements: Normal thermal movement is defined as that resulting from the following maximum change (range) in ambient temperature. Base design calculations on actual surface temperatures of metals due to both solar heat gain and night time sky heat loss:

1. Temperature Change (range): 120 deg F, ambient; 180 deg F, material surfaces 100 degrees Fahrenheit.

F. Air Performance, Water Penetration, and Air Leakage Ratings: Provide louvers complying with performance requirements indicated as demonstrated by testing manufacturers stock units, of height and width indicated, according to AMCA 500-D.

G. UL and NEMA Compliance: Provide motors and related components for motor-operated louvers that are listed and labeled by UL and comply with applicable NEMA standards.

H. Building Envelope Testing:

1. As indicated in Section 01 81 13 - Sustainable Design Requirements, Section 01 91 13 - General Commissioning Requirements, and the “Project Commissioning Plan.”

2.02 MATERIALS

A. Aluminum Extrusions: ASTM B221, Alloy 6063-T5, T-52, or T6.

B. Fasteners: Use types and sizes to suit unit installation conditions:

1. Use Phillips flat-head screws for exposed fasteners unless otherwise indicated.

2. For fastening aluminum, use aluminum or 300 series stainless-steel fasteners.

3. For fastening stainless steel, use 300 series stainless-steel fasteners.

C. Fasteners for Concrete and Masonry: Torque-controlled expansion anchors, made from stainless-steel components, with capability to sustain, without failure, a load equal to four times the loads imposed, for concrete, or six times the load imposed, for masonry, as determined by testing in accordance with ASTM E488/E488M, conducted by a qualified Independent Testing Laboratory:

1. Bituminous Paint: Cold-applied asphalt emulsion complying with ASTM D1187/D1187M.

2.03 FIXED, EXTRUDED-ALUMINUM LOUVERS

A. Horizontal, Continuous-Line, Drainable-Blade Louver for Wall Openings: Drainable-blade louver with blade gutters (drains) capable of collecting and draining water from blades:

1. Basis-of-Design Product: Subject to compliance with requirements, provide Airolite K6774 by The Airolite Company, LLC, or equivalent product by one of the following:

a. Construction Specialties, Inc.

b. Ruskin Company; Tomkins PLC.

c. United Enertech Corp.

d. Greenheck.

2. Louver Depth: as shown.

3. Frame and Blade Nominal Thickness: Not less than 0.081 inch.

4. Prefabricated Sills, Coping or Caps and Jambs: Manufacturer's aluminum extrusions designed for application, finished to match louvers.

5. Insect Screen: As specified.

6. Louver Performance Ratings:

a. Free Area: Not less than 8.35 square feet for 48-inch-wide by 48-inch- high louver.

b. Point of Beginning Water Penetration: Not less than 1075 feet per minute.

c. Air Performance: Not more than 01.16-inch w.g. static pressure drop at point of beginning water penetration intake velocity.

7. Finish: Fluoropolymer coating.

2.04 COMBINATION FIXED/OPERABLE, EXTRUDED-ALUMINUM LOUVERS

A. Horizontal, Combination Louver/Damper, Drainable-Blade Louver, Concealed Actuator: Drainable fixed blades and head member, rear operable blades, and actuator in sill enclosure. Blade gutters (drains) in blades capable of collecting and draining water from blades:

1. Basis-of-Design Product: Subject to compliance with requirements, provide Greenheck EACC-401, or equivalent product by one of the following:

a. Airolite Company, LLC (The).

b. Construction Specialties, Inc.

c. Ruskin Company; Tomkins PLC.

d. United Enertech Corp.

2. Louver Depth: as shown.

3. Frame Nominal Thickness: Not less than 0.125-inch thickness.

4. Blade Nominal Thickness: Not less than 0.081-inch thickness.

5. Prefabricated Sills, Coping or Caps and Jambs: Manufacturer's aluminum extrusions designed for application, finished to match louvers.

6. Seals: Dual-durometer extruded vinyl blade seals; compressible stainless steel jamb seals.

7. Insect Screen: As specified.

8. Louver Performance Ratings:

a. Free Area: As indicated in Contract Documents.

b. Point of Beginning Water Penetration: Not less than 1192 feet per minute.

c. Air Performance: Not less than acceptable velocities for application, occurring at point of beginning water penetration intake velocity.

9. Louver Operation: Provide operable louvers with operating mechanisms to suit louver sizes, and as follows:

a. Motor operation with 110-V, 60-Hz motor and limit switch. Include remote-mounted switches, indicator lights, and terminals for controlling devices.

b. Operator Type: Architect of Record will select from one of the following:

1) Two-position, spring-return application.

2) Two-direction.

10. Finish: Fluoropolymer coating.

2.05 FIXED, EXTRUDED-ALUMINUM LOUVERS FOR SCREEN ASSEMBLIES

A. See drawing elevations for numbering of panels: Horizontal Louver Assembly for Screen Applications: Drainable-blade louver with blade gutters (drains) capable of collecting and draining water from blades:

1. Basis-of-Design Product: Subject to compliance with requirements, provide Airolite SCB601 by The Airolite Company, LLC, or equivalent product by one of the following:

    a. Construction Specialties, Inc.

    b. Ruskin Company; Tomkins PLC.

    c. United Enertech Corp.

2. Product: Mullions visible.

3. Insect Screening: Not required.

4. Blank-Off Panels: Per below and where indicated.

5. Removable Sections: Provide sections of louvers indicated removable for maintenance access. Design devices and fastenings concealed from view, and acceptable to Architect of Record.

6. Finish: Fluoropolymer coating.

2.06 INSECT SCREENS

A. General: Provide insect screen at each exterior louver:

1. Screen Location: Interior face.

2. Screening Type: Insect screening.

B. Secure screen frames to louver frames with stainless-steel machine screws, spaced a maximum of 6 inches from each corner and at 12 inches on center.

C. Louver Screen Frames: Fabricate with mitered corners to louver sizes indicated:

1. Metal: Same kind and form of metal as indicated for louver to which screens are attached.

2. Finish: Mill finish unless otherwise indicated.

3. Type: Non-rewireable, U-shaped frames.

D. Insect Screening Material: Aluminum, 18 x 16 aluminum mesh 0.011 INCH (0.279mm) diameter wire insect screens secured within 0.055 INCH (1.40mm) thick extruded aluminum frames. Frames to have mitered corners and corner locks.

2.07 BLANK-OFF PANELS

A. Insulated Blank-Off Panels: UNO 2 inch laminated panels consisting of an insulating core surfaced on back and front with metal sheets and factory-attached to back of louver:

1. Material: Match louver material, painted black on exterior side; provide where duct connected to louver is smaller than louver frame, sealing off louver area outside duct.

2. Insulating Core: Mineral wool, R-value = 4 per inch.

3. Edge Treatment: Trim perimeter edges of blank-off panels with louver manufacturer's standard channel frames, with corners mitered and with same finish as panels.

4. Seal perimeter joints between panel faces and louver frames with gaskets or sealant.

5. Panel Finish: Same type of finish applied to louvers, but black color on exterior face.

B. Blank-Off Panels: 0.050 inch aluminum sheet and attached to back of louver:

1. Material: Match louver material, painted black on exterior side; provide where duct connected to louver is smaller than louver frame, sealing off louver area outside duct.

2. Edge Treatment: Trim perimeter edges of blank-off panels with louver manufacturer's standard channel frames, with corners mitered and with same finish as panels.

3. Seal perimeter joints between panel faces and louver frames with gaskets or sealant.

4. Panel Finish: Same type of finish applied to louvers, but black color on exterior face.

2.08 FABRICATION

A. Assemble louvers in factory to minimize field splicing and assembly. Disassemble units as necessary for shipping and handling limitations. Clearly mark units for reassembly and coordinated installation.

B. Vertical Assemblies: Where height of louver units exceeds fabrication and handling limitations, fabricate units to permit field-bolted assembly with close-fitting joints in jambs and mullions, reinforced with splice plates:

1. Continuous Vertical Assemblies: Fabricate units without interrupting blade- spacing pattern.

C. Maintain equal louver blade spacing, including separation between blades and frames at head and sill, to produce uniform appearance.

D. Fabricate frames, including integral sills, to fit in openings of sizes indicated, with allowances made for fabrication and installation tolerances, adjoining material tolerances, and perimeter sealant joints:

1. Frame Type: Channel unless otherwise indicated.

E. Include supports, anchorages, and accessories required for complete assembly.

F. Provide vertical mullions of type and at spacings indicated, but not more than recommended by manufacturer, or 72 inches on center, whichever is less.

1. Fully Recessed Mullions: Where indicated, provide mullions fully recessed behind louver blades. Where length of louver exceeds fabrication and handling limitations, fabricate with close-fitting blade splices designed to permit expansion and contraction.

2. Semi-recessed Mullions: Where indicated, provide mullions partly recessed behind louver blades so louver blades appear continuous. Where length of louver exceeds fabrication and handling limitations, fabricate with interlocking split mullions and close-fitting blade splices designed to permit expansion and contraction.

G. Provide subsills made of same material as louvers or extended sills for recessed louvers.

H. Join frame members to each other and to fixed louver blades with fillet welds, threaded fasteners, or both, as standard with louver manufacturer unless otherwise indicated or size of louver assembly makes bolted connections between frame members necessary.

2.09 ALUMINUM FINISHES

A. Exposed Fluoropolymer Coating Finish: Fluoropolymer Coating System FL-2 as stated elsewhere in the Contract Documents.

B. Concealed Aluminum: Manufacturer's standard.

PART 3 - EXECUTION

3.01 EXAMINATION

A. Examine substrates and openings, with Installer present, for compliance with requirements for installation tolerances and other conditions affecting performance of the Work.

B. Verify that prepared openings and flashings are ready to receive work and opening dimensions are as indicated on shop drawings.

C. Verify that field measurements are as indicated.

D. Proceed with installation only after unsatisfactory conditions have been corrected.

3.02 PREPARATION

A. Coordinate shop drawings, diagrams, templates, instructions, and directions for installation of anchorages to be embedded in concrete or masonry construction, and post-installed anchors and fasteners in concrete and framed walls. Coordinate delivery of such items to avoid construction delay.

B. Ensure rough openings are prepped with building envelope components required such as Weather-resistive barriers, liquid-applied flashings, sill flashings and vapor barriers.

3.03 INSTALLATION

A. Install louver assembly in accordance with manufacturer's instructions.

B. Install louvers level, plumb, and at indicated alignment with adjacent work.

C. Install flashings and align louver assembly to ensure moisture shed from flashings and diversion of moisture to exterior.

D. Secure louver frames in openings with concealed fasteners. Provide ethylene propylene diene M-class rubber (EPDM) or Neoprene washers fitted to screws where required to protect metal surfaces and to make a weather-tight connection.

E. Form closely fitted joints with exposed connections accurately located and secured.

F. Provide perimeter reveals and openings of uniform width for sealants and joint fillers, as indicated. Install concealed gaskets, flashings, joint fillers and insulation as louver installation progresses where required to make louver joints weather-tight. Install perimeter sealant and backing rod as stated elsewhere in the Contract Documents.

G. Protect unpainted galvanized and nonferrous-metal surfaces that are in contact with concrete, masonry, or dissimilar metals from corrosion and galvanic action by separating surfaces with isolation pads. Use heavy coat of bituminous paint only when permitted by Architect of Record.

H. Provide waterproof connection between ductwork, louver screen and louver, and provide positive water drainage to exterior of building.

I. Repair finishes damaged by cutting, welding, soldering, and grinding operations. Restore finishes to that no evidence of corrective work remains. Return items which cannot be refinished in field to shop, and make required alterations and refinish entire unit, or provide new units.

3.04 ADJUSTING AND CLEANING

A. Test operable louvers and adjust as needed to produce fully functioning units that comply with requirements.

B. Clean exposed surfaces of louvers and vents that are not protected by temporary covering, to remove fingerprints and soil during construction period. Do not let soil accumulate during construction period.

C. Before final inspection, clean exposed surfaces with water and a mild soap or detergent not harmful to finishes. Thoroughly rinse surfaces and dry.

D. Restore louvers and vents damaged during installation and construction so no evidence remains of corrective work. If results of restoration are unsuccessful, as determined by Resident Engineer, remove damaged units and replace with new units:

1. Touch up minor abrasions in finishes with air-dried coating that matches color and gloss of, and is compatible with, factory-applied finish coating.

END OF SECTION

SECTION 09 21 16

GYPSUM BOARD ASSEMBLIES

PART 1 - GENERAL

1.01 SUMMARY

A. Section includes:

1. Requirements for the following:

a. Metal stud wall framing for gwb assemblies.

b. Metal channel ceiling framing for gwb ceilings.

c. Shaft wall system.

d. Fire-rated wall and ceiling assemblies.

e. Gypsum wallboard.

f. Gypsum Sheathing

g. Cementitious backer board.

h. Joint treatment and accessories.

i. Acoustic insulation and sealant.

j. Delegated design of framing systems.

1.02 REFERENCES

A. This Section incorporates by reference the latest revisions of the following documents:

1. American National Standards Institute (ANSI):

a. ANSI A108.11 - American National Standard Specifications for Interior Installation of Cementitious Backer Units.

b. ANSI A118.9 - American National Standard Test Methods and Specifications for Cementitious Backer Board.

2. American Society for Testing and Materials International (ASTM):

a. ASTM A653 - Standard Specification for Steel Sheet, Zinc-Coated (Galvanized) or Zinc-Iron Alloy-Coated (Galvannealed) by the Hot-Dip Process.

b. ASTM A568/A568M - Standard Specification for Steel, Sheet, Carbon, Structural, and High-Strength, Low-Alloy, Hot-Rolled and Cold-Rolled, General Requirements.

c. ASTM B221 - Standard Specification for Aluminum and Aluminum-Alloy Extruded Bars, Rods, Wire, Profiles, and Tubes.

d. ASTM C475/C475M - Standard Specification for Joint Compound and Joint Tape for Finishing Gypsum Board.

e. ASTM C645 - Standard Specification for Nonstructural Steel Framing Members.

f. ASTM C665-12 Standard Specification for Mineral-Fiber Blanket Thermal Insulation for Light Frame Construction.

g. ASTM C754 - Standard Specification for Installation of Steel Framing Members to Receive Screw-Attached Gypsum Panel Products.

h. ASTM C840 - Standard Specification for Application and Finishing of Gypsum Board.

i. ASTM C919 Standard Practice for Use of Sealants in Acoustical Applications.

j. ASTM C1002 - Standard Specification for Steel Self-Piercing Tapping Screws for the Application of Gypsum Panel Products or Metal Plaster Bases to Wood Studs or Steel Studs.

k. ASTM C1047 - Standard Specification for Accessories for Gypsum Wallboard and Gypsum Veneer Base.

l. ASTM C1177/C1177M - Standard Specification for Glass Mat Gypsum Substrate for Use as Sheathing.

m. ASTM C1396/C1396M - Standard Specification for Gypsum Board.

n. ASTM C1658/C1658M – Standard Specification for Glass Mat Gypsum Panels.

o. ASTM D3273 - Standard Test Method for Resistance to Growth of Mold on the Surface of Interior Coatings in an Environmental Chamber.

p. ASTM E72 - Standard Test Methods of Conducting Strength Tests of Panels for Building Construction.

q. ASTM E119 - Standard Test Methods for Fire Tests of Building Construction and Materials.

r. ASTM E488 - Standard Test Methods for Strength of Anchors in Concrete Elements.

s. ASTM E1190 - Standard Test Methods for Strength of Power-Actuated Fasteners Installed in Structural Members.

3. Gypsum Association (GA):

a. GA-214 – Recommended Levels of Gypsum Board Finish.

b. GA-216 - Application and Finishing of Gypsum Panel Products.

c. GA-219 - Frame Opening Details.

d. GA-226 - Application of Gypsum Board to Form Curved Surfaces.

e. GA-600 - Fire Resistance Design Manual.

1.03 SUBMITTALS

A. Submit:

1. Shop Drawings: Indicate special details associated with fireproofing, acoustic seals, and other unique details. Show size, gauge, and spacing of studs used to comply with specified requirements for steel framing and show all control joints as indicated or required in accordance with ASTM C840.

2. Product Data: Provide data on metal framing, gypsum board, accessories, and joint finishing system. Include all fire rated assembly test pages.

3. Engineering: for Delegated-Design Submittals include analysis data signed and sealed by the qualified professional engineer responsible for their preparation. Provide manufacturer’s data on partition head to structure connectors, showing compliance with requirements. Provie ICC reports on all fasteners.

4. Provide manufacturer's data or engineering calculations on spans, deflection, attachment methods, and bracing, and indicate compliance with code. Product Data: Provide manufacturer's data on partition head to structure connectors, showing compliance with requirements.

5. LEED Submittals:

a. Where LEED certification is required by the project, submit the same documentation for approval as required by GBCI as a project submittal. Highlight the relevant LEED information.

b. LEED documentation is to be submitted separately and titled LEED SUBMITTAL.

c. Building Product Disclosure and Optimization credit data: Submit data to support the LEED SUBMITTAL.

B. Transmit:

1. Test Reports: For all stud framing products that do not comply with ASTM C 645 or C 754, provide independent laboratory reports showing maximum stud heights at required spacing and deflections.

1.04 QUALITY ASSURANCE

A. Single Source Responsibility for Panel Products: Obtain each type of gypsum board and other panel products from a single manufacturer.

B. Single Source Responsibility for Finishing Materials: Obtain finishing materials from the same manufacturer that supplies gypsum board and other panel products.

C. Perform all work of this Section in accordance with ASTM C 840.

D. Applicator Qualifications: Company specializing in performing gypsum board application and finishing, with minimum three years of documented experience.

E. Mock-Up:

1. In advance of the drywall work, construct mock-up of gypsum panel wall/ceiling assemblies to establish finished appearance expectations of the selected finishing and paint system:

a. Locate mock-up(s) as directed by Resident Engineer for representative conditions of a level 3, 4, and 5 finish.

b. Apply paint finishes as specified in Section 09 90 00 -0 Painting and Coatings.

2. The mock-up must be representative of the actual project wall and ceiling configuration(s) and finished lighting to be used in the building.

3. Include examples of finished horizontal and vertical panel joints, wall to ceiling transition condition, control joints, edge conditions at window or door frame, and embedded items such as lighting and wall penetrations such as pipe or conduit.

4. Maintain accepted mock-ups for the duration of construction as the standard for expected quality of work.

5. Accepted mock-ups may remain as part of the completed work if undisturbed at time of substantial completion.

1.05 DELIVERY, STORAGE, AND HANDLING

A. Delivery, identification, storage and handling shall be in accordance with the requirements of ASTM C754.

B. Deliver materials in original packages, containers, or bundles bearing brand name and identification of manufacturer or supplier.

C. Store materials inside under cover and keep them dry and protected against damage from weather, direct sunlight, surface contamination, corrosion, construction traffic, and other causes. Neatly stack gypsum panels flat to prevent sagging.

D. Handle gypsum board to prevent damage to edges, ends, and surfaces. Do not bend or otherwise damage metal corner beads and trim.

1.06 PROJECT CONDITIONS

A. Environmental Conditions, General: Establish and maintain environmental conditions for applying and finishing gypsum board to comply with ASTM C 840 and with gypsum board manufacturer’s recommendations.

B. Ventilation: Ventilate building spaces, to the extent required, for drying joint treatment materials. Avoid drafts during hot dry weather to prevent finishing materials from drying too rapidly.

PART 2 - PRODUCTS

2.01 PERFORMANCE REQUIREMENTS

A. Completed assemblies to comply with ASTM C840 and GA-216.

B. Fire Test Response Characteristics: Where fire-rated gypsum board assemblies are indicated, provide materials and construction identical to those of assemblies tested for fire resistance in accordance with ASTM E 119 by an Independent Testing Laboratory agency acceptable to the authorities having jurisdiction.

C. Fire Resistance Ratings: As indicated by reference to GA file numbers in GA-600 "Fire Resistance Design Manual" or to design designations in UL "Fire Resistance Directory" or

in the listing of another Independent Testing Laboratory acceptable to authorities having jurisdiction:

1. Regulatory Requirements:

    a. Conform to applicable code for fire-rated assemblies as follows:

        1) Fire-Rated Partitions: Listed assembly by UL or GA with required hour ratings as indicated on Drawings.

        2) Head of Fire-Rated Partitions: Listed assembly by UL or GA with required hour ratings as indicated on Drawings.

2.02 MANUFACTURERS

A. Glass Mat Gypsum Board, Gypsum Sheathing; Moisture-Resistant Sheathing:

1. Georgia-Pacific Gypsum Corporation.

2. National Gypsum Company.

3. United States Gypsum Company.

4. CertainTeed.

5. Manufacturers not otherwise listed, subject to compliance with requirements as required by proprietary fire-rated or acoustical assemblies as indicated on the contract documents.

B. Cementitious Backer Board:

1. Custom Building Products.

2. James Hardie.

3. United States Gypsum Company.

C. Metal Support Systems:

1. Scafco.

2. Cemco.

3. ClarkDietrich.

4. Manufacturers not otherwise listed, subject to compliance with requirements as required by proprietary fire-rated or acoustical assemblies as indicated on the contract documents.

2.03 MATERIALS

A. Metal Framing:

1. General: Provide steel framing members complying with the following minimum requirements:

    a. Performance Requirements: Select steel studs and all other members in accordance with the manufacturer's standard load tables and following design pressures and deflections:

        1) At all partitions: 1/360 at 10 pounds per square foot.

2) At suspended and furred ceilings: 1/240 per 10 pounds per square foot.

b. Protective Coating: G40 hot-dip galvanized coating in accordance with ASTM A653.

2. Non-Loadbearing Framing System Components: ASTM C645; galvanized sheet steel, of size and properties necessary to comply with ASTM C754 for the conditions indicated.

a. Exception: The minimum metal thickness and section properties requirements of ASTM C645 are waived provided steel of 40,000 pounds per square inch minimum yield strength is used, the metal is continuously dimpled, the effective thickness is at least twice the base metal thickness, and maximum stud heights are determined by testing in accordance with ASTM E72 using assemblies specified by ASTM C754.

b. Steel Studs and Runners: ASTM C645, with flange edges of studs bent back 90 degrees and doubled over to form 3/16-inch-wide minimum lip (return) and complying with the following requirements for minimum thickness of base (uncoated) metal and for depth:

1) Thickness: As required to comply with performance requirements for horizontal deflection:

a) Depth: As detailed.

c. Steel Rigid Furring Channels: ASTM C645, hat-shaped, depth and minimum thickness of base (uncoated) metal as follows:

1) Depth: 7/8 inch.

2) Thickness: 0.0179 inch, unless otherwise indicated.

d. Furring Brackets: Serrated-arm type, adjustable, fabricated from corrosion-resistant steel sheet complying with ASTM C645, minimum thickness of base (uncoated) metal of 0.0329 inch, designed for screw attachment to steel studs and steel rigid furring channels used for furring.

e. Z-Furring Members: Manufacturer's standard Z-shaped furring members with slotted or non-slotted web, fabricated from steel sheet complying with ASTM A653 or ASTM A568; with a minimum base metal (uncoated) thickness of 25 GA at interior non load bearing locations, face flange of 1-1/4-inch, wall-attachment flange of 7/8 inch, and of depth required to fit insulation thickness indicated.

f. Fasteners for Metal Framing: Provide fasteners of type, material, size, corrosion resistance, holding power, and other properties required to fasten steel framing and furring members securely to substrates involved; complying with the recommendations of gypsum board manufacturers for applications indicated.

3. Sheet Metal Backing/Strapping: Continuous sheet material fabricated from corrosion-resistant steel sheet in widths complying with ASTM C645.

a. Strapping: Provide 16-gauge x 2 inches width strapping at locations indicated on Drawings.

b. Backing: Behind all cabinetry and shelving, provide 16-gauge sheet metal backing, sized to match extent of cabinetry or shelving, inside of walls screwed directly on steel studs before gypsum wallboard is installed. Ensure flat gypsum installation as required by ANSI A108-A4.8. Use “MantisGrip” backing clips where appropriate. www.mantisgrip.com

4. Typical Framing Components:

a. Studs: "C" shaped with flat or formed webs.

b. Runners: U shaped, sized to match studs.

c. Ceiling Channels: C shaped.

d. Furring: Hat-shaped sections, minimum depth of 7/8 inch.

e. Deflection Track: Manufacturer’s deep-leg, U-shaped steel track; unpunched, with unstiffened flanges, of web depth to contain studs while allowing free vertical movement, with flanges designed to support horizontal and lateral loads.

5. Shaft Wall Studs and Accessories: ASTM C645; galvanized sheet steel, of size and properties necessary to comply with ASTM C754 and specified performance requirements.

6. Framing for Suspended and Furred Wallboard Ceilings: Type and size as specified in ASTM C754 for spacing required.

7. Partition Head to Structure Connections: Provide track fastened to structure with legs of sufficient length to accommodate deflection, for friction fit of studs cut short.

B. Gypsum Board

1. GWB-1: 5/8 inch thick with fiberglass mat laminated to both sides and with manufacturer's standard edges. Comply with ASTM C1658 and ASTM C1177/C1177M when used as exterior sheathing.

2. GWB-2: Same as GWB-1 except fire rated. Assemblies Indicated with Fire-Rating: Use type required by indicated tested assembly; if no tested assembly is indicated, use Type X board, UL or WH listed.

3. GWB-3: fiberglass-mat faced moisture and mold-resistant gypsum wallboard as defined in ASTM C1396/C1396M and complying with ASTM C1658. Sizes to minimize joints in place. Mold resistance: ASTM D3273, score of 10. Thickness as indicated on drawings.

4. GWB-4: Gypsum Shaftwall or Coreboard: ASTM C1396/C1396M; Type X or Type C core as required by indicated tested assembly; sizes to minimize joints in place; 1 inch thick; square, tongue and groove, or double beveled edges, ends square cut.

5. CBB-1: Cementitious Backerboard Substrate for Ceramic Wall Tile and Interior Acoustical Cement Plastering:

a. Backerboard: ANSI A118.9; ASTM C1325 High density, cementitious, glass fiber reinforced. 5/8” thick unless noted otherwise.

b. Mesh Tape: 2-inch wide self-adhesive, coated fiberglass mesh tape for joints and corners.

2.04 ACCESSORIES

A. Sound Attenuation Blankets:

1. Walls: Unfaced mineral-fiber blanket insulation produced by combining mineral fibers of glass or slag described below with thermosetting resins to comply with ASTM C665 for Type I (blankets without membrane facing):

   a. Product: Provide one of the following:

      1) Rockwool (Acoustical Fire Batts) AFB Rockwool International.

      2) SAFB (Sound Attenuation Fire Blankets) by Thermafiber division of Owens Corning, Co.

2. Above Ceilings: Semi-Rigid Mineral Wool: ASTM C612, Type IVA, faced on one side with black facing, and with maximum flame-spread and smoke developed indexes of 25 and 50, respectively, pr ASTM E84; passing ASTM E136 for combustion characteristics:

   a. Product: QuietFiber by Aoustiblok, or approved equal product by Rockwool, Owens Corning.

B. Acoustic Sealant: Non-hardening, non-skinning, non-sag, non-staining, paintable latex sealant, for use in conjunction with gypsum board, and complying with ASTM C919, ASTM C834, ASTM E90, ASTM E84 Class A and the following:

1. Products: Subject to compliance with requirements, provide one of the following:

   a. AC-20 FTR Acoustical and Insulation Sealant, Pecora Corp.

   b. SHEETROCK Acoustical Sealant, United States Gyp Co.

   c. Or approved equal.

2. At fire-rated partitions, sealant must be approved for use in the Listed UL or GA Head-of-Wall joint system, in accordance with Article 2.1.

C. Corner Beads, Edge Trim, and Control Joints: Galvanized steel, or plastic, complying with ASTM C1047. Sheet steel zinc-coated by hot-dip process:

1. Shapes indicated below by reference to Fig. 1 designations in ASTM C1047:

   a. Provide metal cornerbead on outside corners, unless otherwise indicated on Drawings.

   b. LC-bead with both face and back flanges; face flange formed to receive joint compound. Use LC-beads for edge trim unless otherwise indicated.

   c. L-bead with face flange only; face flange formed to receive joint compound. Use L-bead where indicated.

   d. One-piece control joint formed with V-shaped slot, with removable strip covering slot opening.

D. Aluminum Accessories: Where indicated, provide manufacturer’s standard extruded aluminum accessories of profile indicated or referenced by manufacturer’s product designations, complying with the following requirements:

1. Aluminum Alloy: Alloy and temper recommended by aluminum producer and finisher for type of finish indicated and with not less than the strength and durability properties of aluminum extrusions complying with ASTM B221 for alloy and temper 6063-T5.

2. Class II Clear-Anodized Finish: AA-C12C22A3 1 (Chemical Finish: cleaned with inhibited chemicals; Chemical Finish: etched, medium matte; Anodic.

E. Joint Materials: ASTM C475 and as recommended by gypsum board manufacturer for project conditions:

1. Joint Tape: Provide paper reinforcing tape, unless otherwise indicated.

2. Setting-Type Joint Compounds for Gypsum Board: Factory-packaged, job-mixed, chemical-hardening powder products formulated for uses indicated:

a. Where setting-type joint compounds are indicated as a taping compound only or for taping and filling only, use formulation that is compatible with other joint compounds applied over it.

b. For pre-filling gypsum board joints, use formulation recommended by gypsum board manufacturer for this purpose.

c. For filling joints and treating fasteners of water-resistant gypsum backing board behind base for ceramic tile, use formulation recommended by the gypsum board manufacturer for this purpose.

d. For topping compound, use sandable formulation.

3. Drying-Type Joint Compounds for Gypsum Board: Factory-packaged vinyl-based products complying with the following requirements for formulation and intended use:

a. Ready-Mixed Formulation: Factory-mixed product.

b. Job-Mixed Formulation: Powder product for mixing with water at Project site.

c. Taping compound formulated for embedding tape and for first coat over fasteners and face flanges of trim accessories.

d. Topping compound formulated for fill (second) and finish (third) coats.

F. Screws: ASTM C1002; self-drilling type unless otherwise noted. Provide corrosion resistant coated steel drill screws in accordance with manufacturer recommendations at all exterior and wet interior locations.

G. Laminating Adhesive: Special adhesive or joint compound recommended for laminating gypsum panels.

H. Fastening Adhesive for Metal: Special adhesive recommended for laminating gypsum panels to steel framing.

I. Anchorage to Substrate: Corrosion resistant tie wire, nails, screws, fasteners, sealants and other metal supports, of type and size to suit application; to rigidly secure materials in place.

J. Cast-In-Place and Post-Installed Anchors in Concrete: Chemical, Expansion, or Cast in place anchors, fabricated from corrosion-resistant materials, with holes or loops for attaching hanger wires, and with capability to sustain, without failure, a load equal to

5 times that imposed by ceiling construction, as determined from testing in accordance with ASTM E488 conducted by an Independent Testing Laboratory.

K. Powder-Actuated Fasteners in Concrete: Fastener system of type suitable for application indicated, fabricated from corrosion-resistant materials, with clips or other accessory devices for attaching hangers of type indicated, and with capability to sustain, without failure, a load equal to 10 times that imposed by ceiling construction, as determined by testing in accordance with ASTM E1190 conducted by an Independent Testing Laboratory.

L. Wire for Hangers and Ties: ASTM A641, Class 1 zinc coating, soft temper. 0.1620- inch (8 gauge) diameter.

M. Hanger Rods: Mild steel and zinc-coated or protected with rust-inhibitive paint.

N. Flat Hangers: Mild steel and zinc-coated or protected with rust-inhibitive paint.

O. Angle-Type Hangers: Angles with legs not less than 7/8 inch wide, formed from 0.0635-inch-thick galvanized steel sheet complying with ASTM A446 Coating Designation 090, with bolted connections and 5/16-inch-diameter bolts.

P. Elastomeric Spray-Applied Membrane: At fire-rated partitions, membrane must be approved for use in the Listed UL or GA Head-of-Wall joint system, in accordance with Article 2.1:

1. CP 672 Fire Spray by Hilti Construction Chemicals.

2. Metacaulk 1200 and Biostop 750 by Rectorseal.

3. SpecSeal AS 200 Elastomeric Spray, by Specified Technologies, Inc.

2.05 FINISHES

A. Gypsum Board:

1. Finish gypsum board to the Levels shown in the schedule at the end of Part 3 for different applications. Finish Levels to comply with GA 214 “Recommended Levels of Gypsum Board Finish”.

2. Finish water-resistant gypsum backing board forming substrate for ceramic tile to comply with ASTM C840 and board manufacturer’s directions for treatment of joints behind tile.

3. Tape, fill, and sand exposed joints, edges, and corners to produce smooth surface ready to receive finishes:

a. Feather coats of joint compound so that camber is maximum 1/32 inch.

4. Fill and finish joints and corners of cementitious backing board as recommended by manufacturer.

PART 3 - EXECUTION

3.01 EXAMINATION

A. Verify that project conditions are appropriate for work of this section to commence. Examine substrates to which gypsum board assemblies attach or abut, installed hollow metal frames, cast-in-anchors, and structural framing with Installer present for compliance with requirements for installation tolerances and other conditions affecting performance of

assemblies specified in this Section. Do not proceed with installation until unsatisfactory conditions have been corrected:

1. Notify Resident Engineer 7 days in advance of date and time when Work, or part of Work, will be ready for ceiling framing observation.

3.02 PREPARATION

A. Ceiling Anchorages: Coordinate installation of ceiling suspension systems with installation of overhead structural assemblies to ensure that inserts and other provisions for anchorages to building structure have been installed to receive ceiling hangers that will develop their full strength and at spacing required to support ceilings:

1. Furnish concrete inserts and other devices indicated to other trades for installation well in advance of time needed for coordination with other construction.

3.03 METAL FRAMING INSTALLATION

A. Shaft Wall:

1. General: Install gypsum board shaft-wall assemblies to comply with performance and other requirements indicated as well as with manufacturer's installation instructions and the following:

a. ASTM C754 for installing steel framing.

2. Do not bridge building expansion joints with shaft-wall assemblies; frame both sides of joints with furring and other support as indicated.

3. Install supplementary framing in gypsum board shaft-wall assemblies around openings and as required for blocking, bracing, and support of gravity and pullout loads of fixtures, equipment, services, heavy trim, furnishings, and similar items that cannot be supported directly by shaft-wall assembly framing:

a. Support elevator hoistway door frames independently of shaft-wall framing assemblies or reinforce assemblies according to assembly manufacturer's instructions.

b. Where handrails are indicated for direct attachment to gypsum board shaft-wall assemblies, provide not less than a 0.0341-inch-thick by 4-inch-wide galvanized steel reinforcement strip, accurately positioned and secured behind not less than 1 gypsum board face layer of 1/2-inch or 5/8-inch thickness.

4. Coordinate gypsum board shaft-wall construction with fireproofing applied to structural elements so both remain complete and undamaged. Patch or replace sprayed-on fireproofing removed or damaged during the installation of shaft-wall assemblies to comply with requirements specified in Section 07 81 00 - Applied Fire Protection.

5. Integrate stair hanger rods with gypsum board shaft-wall assemblies where indicated (and where possible) by locating cavity of assemblies where required to enclose rods.

6. At penetrations in shaft wall, maintain fire-resistance rating of entire shaft-wall assembly by installing supplementary steel framing around perimeter of penetration and fire protection behind boxes containing wiring devices, elevator call buttons, elevator floor indicators, and similar items.

7. Isolate shaft-wall assemblies from building structure at locations indicated to prevent transfer of loading imposed by structural movement. Comply with details indicated on Drawings.

8. Seal gypsum board shaft-walls at perimeter of each section that abuts other work and at joints and penetrations within each section. Install acoustical sealant to withstand dislocation by air pressure differential between shaft and external spaces; comply with manufacturer’s instructions and ASTM C919.

9. Shaft Wall Framing: Comply with manufacturer's installation instructions:

    a. Install studs at spacing required to meet performance requirements.

B. Metal Framing:

1. Metal Framing General: Comply with ASTM C754 and manufacturer's instructions, ASTM C754 and with ASTM C840 requirements that apply to framing installation.

    a. Install supplementary framing, blocking, and bracing at terminations in gypsum board assemblies to support fixtures, equipment services, heavy trim, grab bars, toilet accessories, furnishings, or similar construction. Comply with details indicated and with recommendations of gypsum board manufacturer or, if none are available, with "Gypsum Construction Handbook" published by United States Gypsum Co.

    b. Isolate steel framing from building structure at locations indicated to prevent transfer of loading imposed by structural movement. Comply with details shown on Drawings:

        1) Where building structure abuts ceiling perimeter or penetrates ceiling.

        2) Where partition framing and wall furring abut structure except at floor.

            a) Provide slip- or cushioned-type joints as detailed to attain lateral support and avoid axial loading.

        3) Install elastomeric spray-applied sealant and mineral wool deck flute packing as required at deflection track in accordance with manufacturer's instructions.

    c. Do not bridge building expansion and control joints with steel framing or furring members. Independently frame both sides of joints with framing or furring members as indicated.

    d. Provide anchorage bracing and support designed to meet structural seismic requirements of relevant building code.

2. Suspended Ceilings and Soffits:

    a. Suspend ceiling hangers from building structural members and as follows:

        1) Install hangers plumb and free from contact with insulation or other objects within ceiling plenum that are not part of supporting structural or ceiling suspension system. Splay hangers only where required to miss obstructions and offset resulting horizontal forces by bracing, counter-splaying, or other equally effective means.

2) Where width of ducts and other construction within ceiling plenum produces hanger spacing that interfere with the location of hangers required to support standard suspension system members, install supplemental suspension members and hangers in form of trapezes or equivalent devices. Size supplemental suspension members and hangers to support ceiling loads within performance limits established by referenced standards and requirements of AHJ.

3) Secure wire hangers by looping and wire-tying, either directly to structures or to inserts, screw eyes, or other devices and fasteners that are secure and appropriate for substrate, and in a manner that will not cause them to deteriorate or otherwise fail due to age, corrosion, or elevated temperatures.

4) Secure flat, angle, channel, and rod hangers to structure, including intermediate framing members, by attaching to inserts, screw eyes, or other devices and fasteners that are secure and appropriate for structure as well as for type of hanger involved, and in a manner that will not cause them to deteriorate or fail due to age, corrosion, or elevated temperatures.

5) Do not support ceilings directly from permanent metal forms. Furnish cast-in- place hanger inserts that extend through forms.

6) Do not attach hangers to steel deck tabs.

7) Do not attach hangers to steel roof deck. Attach hangers to structural members.

8) Do not connect or suspend steel framing from ducts, pipes or conduit.

b. Sway-brace suspended steel framing with hangers used for support.

c. Install suspended steel framing components in sizes and at spacing indicated but not less than that required by the referenced steel framing installation standard:

1) Wire Hangers: 4 feet on center.

2) Carrying Channels (Main Runners): 1-1/2 inch, 4 feet on center.

3) Rigid Furring Channels (Furring Members): 16 inches on center.

d. Installation Tolerances: Install steel framing components for suspended ceilings so that cross-furring members or grid suspension members are level to within 1/8 inch in 12 feet as measured both lengthwise on each member and transversely between parallel members.

e. Wire-tie or clip furring members to main runners and to other structural supports as indicated.

f. Grid Suspension System: Attach perimeter wall track or angle where grid suspension system meets vertical surfaces. Mechanically join main beam and cross-furring members to each other and butt-cut to fit into wall track.

g. Install bracing as required at exterior locations to resist wind uplift.

3. Framing for Walls and Partitions:

   a. Install runners (tracks) at floors, ceilings, and structural walls and columns where gypsum board stud assemblies abut other construction.

   b. For STC-rated and fire-resistive-rated partitions seal runners (tracks) to floor and underside of roof deck as indicated in the Listed Assembly per Article 2.01.

   c. Installation Tolerances: Install each steel framing and furring member so that fastening surfaces do not vary more than 1/8 inch from the plane formed by the faces of adjacent framing.

   d. Extend partition framing full height to structural supports or substrates above suspended ceilings, except where partitions are indicated to terminate at suspended ceilings. Cut studs 1/2 inch short of full height. Continue framing over frames for doors and openings and frame around ducts penetrating partitions above ceiling to provide support for gypsum board:

      1) For STC-rated and fire-resistive-rated partitions requiring partitions to extend to the underside of floor/roof slabs and decks or other continuous solid structural surfaces to obtain ratings, install framing around structural and other members extending below floor/roof slabs and decks, as needed, to support gypsum board closures needed to make partitions continuous from floor to underside of solid structure.

   e. Terminate partition framing at suspended ceilings where indicated.

   f. Install steel studs and furring in sizes and at spacing indicated but not less than that required by the referenced steel framing installation standard to comply with maximum deflection and minimum loading requirements specified.

   g. Install steel studs so that flanges point in the same direction and so that leading edges or ends of each gypsum board can be attached to open (unsupported) edges of stud flanges first.

   h. Frame door openings to comply with details indicated, with GA-219, and with applicable published recommendations of gypsum board manufacturer. Attach vertical studs at jambs with screws either directly to frames or to jamb anchor clips on door frames; install runner track section (for cripple studs) at head and secure to jamb studs:

      1) Extend vertical jamb studs through suspended ceilings and attach to underside of floor or roof structure above.

   i. Frame openings other than door openings to comply with details indicated or, if none indicated, in same manner as required for door openings. Install framing below sills of openings to match framing required above door heads.

4. Openings: Reinforce openings as required for weight of doors or operable panels, using not less than double studs at jambs.

5. Standard Wall Furring: Install at masonry walls scheduled to receive gypsum board, not more than 4 inches from floor and ceiling lines and abutting walls. Secure in place on alternate channel flanges at maximum 24 inches on center:

a. Orientation: Horizontal.

6. Blocking: Install supplementary framing, and blocking to support fixtures, equipment services, heavy trim, grab bars, toilet accessories, furnishings, or similar construction.

3.04 GYPSUM BOARD INSTALLATION

A. Comply with ASTM C840 and GA-216. Install to minimize butt end joints, especially in highly visible locations:

1. Gypsum Soffit Board: Install perpendicular to framing, with staggered end joints over framing members or other solid backing.

2. Cementitious Backing Board: Install over steel framing members where indicated, in accordance with ANSI A108.11 and manufacturer's instructions. Curved Surfaces: Apply gypsum board to curved substrates in accordance with GA-226.

3. Moisture Protection: Treat cut edges and holes in moisture resistant gypsum board and exterior gypsum soffit board with sealant.

4. Install ceiling board panels across framing to minimize the number of abutting end joints and avoid abutting end joints in the central area of each ceiling. Stagger abutting end joints of adjacent panels not less than one framing member. Do not install water resistant gypsum backing board at ceiling locations.

5. Install wall/partition board panels to minimize the number of abutting end joints or avoid them entirely. Stagger abutting end joints not less than one framing member in alternate courses of board. At stairwells and other high walls, install panels horizontally with end abutting joints over studs and staggered.

6. Install gypsum panels with face side out. Do not install imperfect, damaged, or damp panels. Butt panels together for a light contact at edges and ends with not more than 1/16 inch of open space between panels. Do not force into place.

7. Locate both edge or end joints over supports, except in ceiling applications where intermediate supports or gypsum board back-blocking is provided behind end joints. Position adjoining panels so that tapered edges abut tapered edges, and field-cut edges abut field-cut edges and ends. Do not place tapered edges against cut edges or ends. Stagger vertical joints over different studs on opposite sides of partitions. Avoid joints at corners of framed openings where possible.

8. Attach gypsum panels to steel studs so that the leading edge or end of each panel is attached to open (unsupported) edges of stud flanges first.

9. Attach gypsum panels to framing provided at openings and cutouts.

10. Form control joints and expansion joints at locations indicated and as detailed, with space between edges of adjoining gypsum panels, as well as supporting framing behind gypsum panels.

11. Cover both faces, of steel stud partition framing with gypsum panels in concealed spaces (above ceilings), except in chase walls that are braced internally:

a. Except where concealed application is indicated or required for sound, fire, air, or smoke ratings, coverage may be accomplished with scraps of not less than 8 square feet in area.

b. Fit gypsum panels around ducts, pipes, and conduits.

12. Space fasteners in gypsum panels according to referenced gypsum board application and finishing standard and manufacturer's recommendations.

13. Tolerances:

    a. Maximum Variation of Finished Gypsum Board Surface from True Flatness: 1/8 inch in 10 feet in any direction.

B. Gypsum Board Application Methods:

1. Single-Layer Application: Install gypsum wallboard panels as follows:

    a. On ceilings, apply gypsum panels prior to wall partition board application to the greatest extent possible and at right angles to framing, unless otherwise indicated. Provide firm bearing for all ends and edges.

    b. On partitions/walls, apply gypsum panels vertically (parallel to framing), unless otherwise indicated, and provide panel lengths that will minimize end joints. Provide firm bearing for all ends and edges.

    c. On Z-furring members, apply gypsum panels vertically (parallel to framing) with no end joints. Locate edge joints over furring members.

2. Double-Layer Application: Install same gypsum wallboard as scheduled for base layers and for face layers:

    a. On ceilings, apply base layer prior to applying base layer on walls/partitions; apply face layers in same sequence. Offset face-layer joints at least 10 inches from parallel base-layer joints. Apply base layers at right angles to framing members unless otherwise indicated.

    b. On partitions/walls, apply base layers and face layers vertically (parallel to framing) with joints of base layers located over stud or furring member and face layer joints offset at least one stud or furring member with base layer joints. Stagger joints on opposite sides of partitions.

    c. On Z-furring members, apply base layer vertically (parallel to framing) and face layer either vertically (parallel to framing) or horizontally (perpendicular to framing) with vertical joints offset at least one furring member. Locate edge joints of base layer over furring members.

3. Wall Tile Substrates: For substrates indicated to receive thin-set ceramic tile and similar rigid applied wall finishes, comply with the following:

    a. Install tile backer board to comply with ANSI Al08.11.

4. Single-Layer Fastening Methods: Apply gypsum panels to supports as follows:

    a. Fasten with screws.

5. Double-Layer Fastening Methods: Apply base layer of gypsum panels and face layer to base layer as follows:

    a. Fasten both base layers and face layers separately to supports with screws.

    b. Fasten base layers with screws and face layer with adhesive and supplementary fasteners.

C. Trim and Accessories:

1. Control Joints: Place control joints consistent with lines of building spaces and as indicated:

    a. Not more than 30 feet apart on walls and ceilings over 50 feet long.

    b. At exterior soffits, not more than 30 feet apart in both directions.

2. Corner Beads: Install at external corners, using longest practical lengths.

3. Edge Trim: Install at locations where gypsum board abuts dissimilar materials. Install edge trim where edge of gypsum panels would otherwise be exposed or semi-exposed. Provide edge trim type with face flange formed to receive joint compound except where other types are indicated:

    a. Install LC-bead where gypsum panels are tightly abutted to other construction and back flange can be attached to framing or supporting substrate.

    b. Install L-bead where edge trims can only be installed after gypsum panels are installed.

D. Joint Treatment:

1. General: Apply joint treatment at gypsum board joints (both directions); flanges of corner bead, edge trim, and control joints; penetrations; fastener heads, surface defects, and elsewhere as required to prepare gypsum board surfaces for decoration and levels of gypsum board finish indicated:

    a. Pre-fill open joints rounded or beveled edges, and damaged areas using setting-type joint compound.

    b. Apply joint tape over gypsum board joints except those with trim accessories having concealed face flanges not requiring taping to prevent cracks from developing in joint treatment at flange edges.

    c. Apply joint tape over gypsum board joints and to trim accessories with concealed face flanges as recommended by trim accessory manufacturer and as required to prevent cracks from developing in joint compound at flange edges.

3.05 CLEANING

A. Promptly remove any residual joint compound from adjacent surfaces.

3.06 PROTECTION

A. Provide final protection and maintain conditions, in a manner suitable to Installer that ensures gypsum board assemblies remain without damage or deterioration at time of Completion.

B. Repair or replace GWB damaged during construction to match the quality and appearance of the original finish.

3.07 SCHEDULES

A. Finish Levels:

1. Finish gypsum board in scheduled areas in accordance with levels defined in ASTM C840, GA-214 and as scheduled below.

2. Level 1: Above finished ceilings concealed from view, for ceiling plenum areas, and where indicated, unless a higher level of finish is required for fire-resistive-rated assemblies and/or sound-rated assemblies.

3. Level 2: Utility areas and where cementitious backing board panels form substrates for tiling, and where indicated.

4. Level 3: Standard finish level unless otherwise noted.

5. Level 4: To be used at buildings in personnel spaces, including offices and crew facilities.

6. Level 5: Use where recommend by gypsum board manufacturer and GA-214 to achieve satisfactory finish on glass-mat faced gypsum, and where required by wall covering and/or tile manufacturer.

    a. Level 5 finish is required for office and crew facilities and public lobbies where satisfactory finish results cannot be achieved with a level 4 finish, as determined via mock-up.

END OF SECTION

SECTION 09 22 16

NON-STRUCTURAL METAL FRAMING

PART 1 - GENERAL

1.01 SUMMARY

A. Section Includes:

1. Requirements for the following:

a. Metal partition, ceiling, and soffit framing for assemblies not containing gypsum board.

b. Interior suspension systems for non-gwb ceilings.

c. Blocking and backing panels.

d. Furring channels and supports for non-gwb finishes.

B. This section does not include:

1. Gypsum board assemblies.

2. Fire-rated assemblies and shaft walls.

3. Load-bearing framing.

1.02 REFERENCES

A. ASTM A641/A641M - Standard Specification for Zinc-Coated (Galvanized) Carbon Steel wire.

B. ASTM A653/A653M - Standard Specification for Steel Sheet, Zinc-Coated (Galvanized) or Zinc-Iron Alloy-Coated (Galvannealed) by the Hot-Dip Process.

C. ASTM C635/635M - Standard Specification for Manufacturer, Performance and Testing of Metal Suspension Systems for Acoustical Tile and Lay-in Panel Ceilings.

D. ASTM C636 - Standard Practice for Installation of Metal Ceiling Suspension Systems for Acoustical Tile and Lay-in Panels.

E. ASTM C645 - Standard Specification for Nonstructural Steel Framing Members.

F. ASTM C754 - Standard Specification for Installation of Steel Framing Members to Receive Screw-Attached Gypsum Panel Products.

G. ASTM E90 - Standard Test Method for Laboratory Measurement of Airborne Sound Transmission Loss of Building Partitions and Elements.

H. ASTM E413 - Classification for Rating Sound Insulation.

I. ASTM E580 - Standard Practice for Installation of Ceiling Suspension Systems for Acoustical Tile and Lay-in Panels in Areas Subject to Earthquake Ground Motions.

1.03 SUBMITTALS

A. Delegated-Design Submittal: For assemblies indicated to comply with performance requirements and design criteria, including analysis data signed and sealed by the qualified professional engineer, currently licensed in the State of Washington, who is responsible for their preparation.

B. Product Data: Provide data describing framing member materials and finish, product criteria, load charts, and limitations. Provide manufacturer's data on partition head to structure connectors, showing compliance with requirements.

C. LEED Submittals:

1. Where LEED certification is required by the project, submit the same documentation for approval as required by GBCI as a project submittal. Highlight the relevant LEED information.

2. LEED documentation is to be submitted separately and titled LEED SUBMITTAL.

3. Building Product Disclosure and Optimization credit data: Submit data to support the LEED SUBMITTAL.

D. Shop Drawings:

1. Indicate required flashings, sealing at openings.

2. Indicate acoustic details.

3. Describe method for securing studs to tracks, splicing, and for blocking and reinforcement of framing connections.

E. Qualification Data: For Installer and design engineer.

F. Manufacturer's Installation Instructions: Indicate special preparation of substrate, installation and attachment methods, and perimeter conditions requiring special attention.

1.04 QUALITY ASSURANCE

A. Designer Qualifications: Professional structural engineer with 5 years of documented experience in design of this work and licensed in the location of the project.

B. Installer Qualifications: Company specializing in performing the work of this section with minimum 5 years of documented experience on projects of similar size and complexity.

1.05 DELIVERY, STORAGE, AND HANDLING

A. As required by the manufacturer for a warrantable installation of the installed products to meet the Performance and Design Criteria.

PART 2 - PRODUCTS

2.01 PERFORMANCE REQUIREMENTS

A. Perform Work in accordance with ASTM C645.

B. Coordinate the placement of components to be installed within stud framing system.

C. Ceiling Assemblies: Coordinate with installation of overhead structure to ensure that inserts and other provisions for anchorages to building structure have been installed to receive hangers at spacing required to support the Work and that hangers will develop their full strength.

D. Design and install framing and furring to limit deflection to the following under point loads of 100 lbs. and uniform loads as noted below psf except where required to withstand greater load. (pressurized shafts and stairwells for example):

1. Maximum Deflection of Vertical Assemblies:

a. Assemblies spanning single floor: Sustained loads of 5 lbf/sq ft with a maximum mid span deflection of 1:240.

b. Assemblies spanning multiple floors: Sustained loads of 7.5 lbf/sq ft with a maximum mid span deflection of 1:240.

2. Maximum Deflection of Horizontal Assemblies: 1:240 deflection under dead loads and wind uplift.

3. Maximum Deflection for assemblies under applied plaster finishes (Portland Cement or Gypsum) and ceramic tile is 1:360. Comply with requirements in ASTM C840 that apply to framing installation for gypsum board assemblies.

4. Use The SSMA Product Technical Information Book to look up the appropriate stud size, spacing and thickness.

E. Ceiling and Soffit Framing:

1. Seismic Requirements:

a. Classification; Confirm to ASTM C635, heavy Duty Classification.

b. Code Compliance: FBC, American Society of Civil Engineers ASCE 7 Section 13 and CISCA Guidelines.

F. STC-Rated Assemblies: For STC-rated assemblies, provide materials and construction identical to those tested in assembly indicated on Drawings, according to ASTM E90 and classified according to ASTM E413 by an independent testing agency.

2.02 MANUFACTURERS

A. Specification is based on products by members in good standing of the Steel Stud Manufacturer's Association.

2.03 FRAMING SYSTEMS

A. Framing Members, General: Comply with ASTM C754 for conditions indicated. Comply with manufacturer’s requirements for height/ span limitations for non-gypsum assemblies:

1. Steel Sheet Components: Comply with ASTM C645 requirements for metal unless otherwise indicated.

2. Protective Coatings: ASTM A653/A653M, G60 and G90, hot-dip galvanized:

a. G60, unless noted otherwise.

b. G90 at exterior conditions and where indicated on the Drawings.

B. Partition Head to Structure Connections: Provide mechanical anchorage devices that accommodate deflection using slotted holes, screws and anti-friction bushings, preventing rotation of studs while maintaining structural performance of partition.

1. Material:

a. Typical: ASTM A653/A653M steel sheet, SS Grade 50, with G40/Z120 hot dipped galvanized coating.

b. Areas Subject to Moisture: ASTM A653/A653M steel sheet, SS Grade 50, with G60/Z180 hot dipped galvanized coating. Areas include exterior or non-conditioned space, shower rooms, locker rooms or other locations subject to regular wetting or high humidity.

C. Studs and Tracks: ASTM C645:

1. Steel Studs and Tracks:

a. Minimum Base-Metal Thickness: 0.0329 inch.

D. Slip-Type Head Joints: Where indicated, provide one of the following:

1. Double-Track System: ASTM C645 top outer tracks, inside track with 2-inch- deep flanges in thickness not less than indicated for studs and fastened to studs, and outer track sized to friction-fit over inner track.

2. Deflection Track: Steel sheet top track manufactured to in accordance with STC details on the Drawings and to prevent cracking of finishes applied to interior partition framing resulting from deflection of structure above:

a. In thicknesses matching those indicated for studs and in widths to accommodate depth of studs.

E. Flat Strap and Backing Plate: Steel sheet for blocking and bracing in length and width indicated:

1. Minimum Base-Metal Thickness: 0.0179 inch.

F. Cold-Rolled Channel Bridging: Steel, 0.0538-inch minimum base-metal thickness, with minimum 1/2-inch- wide flanges.

G. Hat-Shaped, Rigid Furring Channels: ASTM C645.

1. Minimum Base-Metal Thickness: 0.0179 inch.

2. Depth: As indicated on Drawings.

H. Z-Shaped Furring: With slotted or nonslotted web, face flange of 1-1/4 inches, wall attachment flange of 7/8 inch, minimum uncoated-metal thickness of 0.0179 inch, and depth required to fit insulation thickness indicated.

2.04 SUSPENSION SYSTEMS

A. Tie Wire: ASTM A641/A641M, Class 1 zinc coating, soft temper, 0.062-inch- diameter wire, or double strand of 0.048-inch- diameter wire.

B. Wire Hangers: ASTM A641/A641M, ASTM 636, Class 1 zinc coating, soft temper, 0.16 inch in diameter.

C. Carrying Channels (Main Runners): Cold-rolled, commercial-steel sheet with a base-metal thickness of 0.0538 inch and minimum 1/2-inch- wide flanges.

D. Furring Channels (Furring Members):

1. Cold-Rolled Channels: 0.0538-inch uncoated-steel thickness, with minimum 1/2-inch-wide flanges, 3/4 inch deep.

2. Steel Studs and Tracks: ASTM C645:

a. Minimum Base-Metal Thickness: 0.0179 inch

3. Hat-Shaped, Rigid Furring Channels: ASTM C645, 7/8 inch deep or as indicated on the drawings:

a. Minimum Base-Metal Thickness: 0.0179 inch.

E. Grid Suspension System for Ceilings: ASTM C635 ASTM C636, ASTM E580, direct-hung system composed of main beams and cross-furring members that interlock.

F. Blocking and backing panels:

1. Sheet Metal Backing (Blocking): 0.036 inch thick, galvanized. 4-inch minimum width

2. In walls, provide blocking attached to studs as backing and support for wall-mounted items, unless item can be securely fastened to two or more studs or other method of support is explicitly indicated.

3. Where ceiling-mounting is indicated, provide blocking and supplementary supports above ceiling, unless other method of support is explicitly indicated.

4. Specifically, provide non-structural framing and blocking at the following locations:

a. Cabinets and shelf supports.

b. Wall brackets.

c. Handrails.

d. Grab bars.

e. Towel and bath accessories.

f. Wall-mounted door stops.

g. Whiteboards and marker boards.

h. Wall paneling and trim.

i. Joints of rigid wall coverings that occur between studs.

2.05 AUXILIARY MATERIALS

A. General: Provide auxiliary materials that comply with referenced installation standards.

1. Fasteners for Steel Framing: Of type, material, size, corrosion resistance, holding power, and other properties required to fasten steel members to substrates.

2. All accessory materials required by the manufacturer for a warrantable installation of the installed products in a manner that meets the Performance and Design Criteria.

PART 3 - EXECUTION

3.01 EXAMINATION

A. Verify that rough-in utilities are in proper location.

B. Verify existing conditions meet the manufacturer's requirements before starting work.

3.02 INSTALLATION OF STUD FRAMING

A. General: Install all materials in accordance with manufacturer's instructions based on conditions present.

B. Comply with requirements of ASTM C754.

C. Extend partition framing to structure unless noted otherwise:

1. Partitions Terminating at Ceiling: Attach ceiling runner securely to ceiling track in accordance with manufacturer's instructions.

2. Partitions Terminating at Structure: Attach top runner to structure, maintain clearance between top of studs and structure, and connect studs to track using specified mechanical devices in accordance with manufacturer's instructions; verify free movement of top of stud connections; do not leave studs unattached to track.

D. At partitions indicated with an acoustic rating:

1. Provide components and install as required to produce STC ratings as indicated.

2. Place two beads of acoustic sealant (one on either side) between runners and substrate, studs and adjacent construction.

3. Place one bead of acoustic sealant between studs and adjacent vertical surfaces.

4. Acoustic Insulation: Place tightly within spaces, around cut openings, behind and around electrical and mechanical items within partitions, and tight to items passing through partitions.

E. Fit runners under and above openings; secure intermediate studs to same spacing as wall studs.

F. Backing and Blocking: Use steel channels or flat sheets secured to studs minimum 4 inch wide. Provide blocking for support of all wall hung items and equipment.

1. Use sheet metal backing for reinforcement of 16 gauge minimum.

G. Install supplementary framing and bracing at openings and terminations in the work and for support of fixtures, equipment services, heavy trim, grab bars, toilet accessories, furnishings, and similar construction to comply with details indicated and with recommendations of fixture manufacturer.

H. Isolate steel framing from building structure to prevent transfer of loading imposed by structural movement:

1. Where edges of suspended ceilings abut building structure at ceiling perimeters and at penetrations of structural elements.

2. Where partition and wall framing abuts overhead structure.

3. Where studs are installed directly against exterior walls of masonry or concrete, install asphalt felt strips between studs and wall.

3.03 CEILING AND SOFFIT FRAMING

A. Comply with requirements of ASTM C635, ASTM C636, and ASTM E580.

B. Install furring after work above ceiling or soffit is complete. Coordinate the location of hangers with other work.

C. Install furring independent of walls, columns, and above-ceiling work.

D. Acoustical sealant may be used in place of asphalt felt strips between the interior studs and exterior CMU or concrete walls.

E. Securely anchor hangers to structural members or embed in structural slab. Space hangers as required to limit deflection to criteria indicated. Use rigid hangers at exterior soffits.

F. Space main carrying channels at maximum 72 inch on center, and not more than 6 inches from wall surfaces. Lap splice securely.

G. Securely fix carrying channels to hangers to prevent turning or twisting and to transmit full load to hangers.

H. Place furring channels perpendicular to carrying channels, not more than 2 inches from perimeter walls, and rigidly secure. Lap splices securely.

I. Reinforce openings in suspension system that interrupt main carrying channels or furring channels with lateral channel bracing. Extend bracing minimum 24-inches past each opening.

J. Laterally brace suspension system:

1. Sway-brace suspension systems with hangers used for support.

3.04 TOLERANCES

A. Maximum Variation From True Position: 1/8 inch in 10 feet.

B. Maximum Variation From Plumb: 1/8 inch in 10 feet.

C. Level ceiling to a tolerance of 1/1200. For tilted ceilings maintain this tolerance as a "flatness". tolerance.

3.05 PROTECTION

A. Protect installed work as required by the manufacturer to maintain product performance, design criteria and warranty.

END OF SECTION

SECTION 09 67 25

DIELECTRIC EPOXY FLOORING

PART 1 - GENERAL

1.01 SUMMARY

A. Section includes:

1. Requirements for trowel-applied dielectric, epoxy-resin flooring for Traction Power Substation floors.

1.02 REFERENCES

A. This Section incorporates by reference the latest revisions of the following documents:

1. ASTM International (ASTM):

a. ASTM D149 - Standard Test Method for Dielectric Breakdown Voltage and Dielectric Strength of Solid Electrical Insulating Materials at Commercial Power Frequencies.

b. ASTM D695 - Standard Test Method for Compressive Properties of Rigid Plastics.

c. ASTM D4541 - Standard Test Method for Pull-Off Strength of Coatings Using Portable Adhesion Testers.

1.03 COORDINATION

A. Pre-installation Meetings: Conduct conference at Project site. Review methods and procedures related to flooring including, but not limited to, the following:

1. Inspect and discuss condition of substrate and other preparatory work performed by other trades.

2. Review and finalize construction schedule and verify availability of materials, Installer's personnel, equipment, and facilities needed to make progress and avoid delays.

3. Cure time before testing.

1.04 SUBMITTALS

A. Submit:

1. Product Data: Include preparation and installation instructions.

2. Qualification Statements: Installer Certificates signed by manufacturers certifying that installers comply with requirements.

1.05 QUALITY ASSURANCE

A. Installer Qualifications: Engage an installer who is certified in writing by epoxy flooring manufacturer as qualified to install manufacturer's products.

1.06 DELIVERY, STORAGE, AND HANDLING

A. Deliver materials to Project site in supplier's original wrappings and containers, labeled with source's or manufacturer's name, material or product brand name, and lot number if any.

B. Store materials in their original, undamaged packages and containers, inside a wellventilated area protected from weather, moisture, soiling, extreme temperatures, and humidity.

1.07 FIELD/SITE CONDITIONS

A. Ambient Conditions: Comply with manufacturer's written instructions for substrate temperature, ambient temperature, moisture, ventilation, and other conditions affecting flooring installation.

B. Provide permanent lighting or, if permanent lighting is not in place, simulate permanent lighting conditions during flooring installation.

C. Close spaces to traffic during flooring application and for not less than 24 hours after application unless manufacturer specifies a longer period.

PART 2 - PRODUCTS

2.01 PERFORMANCE/DESIGN REQUIREMENTS

A. Provide flooring capable of the following when applied at 1/4 inch thickness:

1. Dielectric Service, in accordance with ASTM D149: 58,000 Vdc.

2. Bond Strength to Concrete in accordance with ASTM D4541: 400 psi minimum.

3. Abrasion Resistance: Not more than 0.5 grams loss when tested with Tabor abrader with 1000 gram load for 1000 cycles.

4. Compressive Strength in accordance with ASTM D695: 8500 psi.

B. Performance of In-Place Flooring: Capable of withstanding testing conditions specified in Section 34 21 16.11 - Traction Power Substation Testing, without arcing or passing current beyond specified limit.

2.02 PRODUCTS MATERIALS

A. Manufacturers:

1. Basis of Design: Hallemite Dielectric Grey Amazite by RBC Industries, Inc., or approved as equal by the Engineer of Records.

B. Description : Dielectric epoxy flooring system.

1. Thickness: 1/4 inch nominal.

2. Color: Manufacturer’s standard grey.

C. Epoxy-Resin Matrix: Manufacturer's standard requirement for use indicated.

D. Aggregates: Silica sand in gradation as required by resin manufacturer.

PART 3 - EXECUTION

3.01 EXAMINATION

A. Examine substrate and area, with Installer present, for compliance with requirements for installation tolerances and other conditions affecting performance of the Work.

B. Proceed with installation only after unsatisfactory conditions, including levelness tolerances, have been corrected.

3.02 PREPARATION

A. Clean substrates of substances, including oil, grease, and curing compounds, that might impair flooring bond. Provide clean, dry, and neutral substrate for flooring application.

B. Seal conduits and drains to prevent the entrance of the epoxy and apply masking to prevent the encapsulation of grounding conductors.

C. Verify that concrete substrates are dry and moisture-vapor emissions are within acceptable levels according to manufacturer's written instructions.

D. Concrete Slabs:

1. Provide sound concrete surfaces free of laitance, glaze, efflorescence, curing compounds, form-release agents, dust, dirt, grease, oil, and other contaminants incompatible with flooring.

a. Shot-blast surfaces with an apparatus that abrades the concrete surface, contains the dispensed shot within the apparatus, and recirculates the shot by vacuum pickup.

b. Repair damaged and deteriorated concrete according to flooring manufacturer's written instructions.

c. Use patching and fill material to fill holes and depressions in substrates according to flooring manufacturer's written instructions.

E. Metal Flooring:

1. Clean metal of oils with suitable approved mineral based cleaner.

2. Grind entire surface to be coated with 36 Grit Grinding Wheel.

3. Clean with solvent to remove products of grinding.

F. Apply masking at stop points and at adjacent surfaces which are not to be coated, so that the flooring will finish at clean lines.

3.03 EPOXY FLOORING INSTALLATION

A. Extent and Location

1. See Traction Electrification Equipment Layout drawings.

B. Place and finish flooring according to manufacturer's written instructions.

C. Ensure that matrix components and fluids from grinding operations do not stain flooring by reacting with divider and control-joint strips.

D. Primer: Apply to flooring substrates according to manufacturer's written instructions.

E. Install epoxy floor coating to a minimum thickness of 1/4 inch as a one piece surface, completely free from cracks and joints, in accordance with manufacturer's instructions. Apply the epoxy to the area shown on the Contract Drawings.

F. Where the edge joins the bare floor, taper the material from the full thickness to the height of the floor over a minimum of a 6-inch wide area.

G. Where the epoxy floor covering meets a wall insulating panel, the floor covering shall completely fill any gap to a minimum thickness of 1/4 inch.

H. Installation Tolerance: Limit variation in flooring surface from level to 1/4 inch in 10 feet; noncumulative.

3.04 FIELD QUALITY CONTROL

A. [Field Testing and Inspection]

3.05 REPAIR

A. Cut out and replace flooring areas that evidence lack of bond with substrate. Cut out flooring areas in panels defined by strips and replace to match adjacent flooring, or repair panels according to manufacturer's written instructions, as approved by Resident Engineer.

B. If flooring fails to provide levels of electrical insulation specified in Section 34 21 16.11 - Traction Power Substation Testing, apply additional layers of epoxy until specified levels are achieved.

END OF SECTION

SECTION 09 96 00

HIGH-PERFORMANCE COATINGS

PART 1 - GENERAL

1.01 SUMMARY

A. Section includes:

1. Requirements for furnishing and applying high performance coating systems in the shop and field on certain items and types of work, as scheduled, including surface preparation, primer coats, intermediate coats, finish coats, field touch-up, and related thinners and associated materials. Coatings used in the systems specified in this Section include:

a. HPC-1: High-Performance Coating for Exposed Concrete and Concrete Unit Masonry: High-build epoxy primer and finish coats.

b. HPC-2: High-Performance Coating for Exposed Primed Structural and Miscellaneous Steel, exposed cast-iron piping including guideway systems exposed to public view: High solids zinc-rich epoxy/acrylic urethane.

c. HPC-3: High-Performance Coating for Exposed Galvanized Structural Steel and Hollow Metal Doors and Frames: High-build aliphatic acrylic polyurethane.

d. HPC-4: High-Performance Coating for Exposed Aluminum Metal: Factory High-performance Fluoropolymer (Polyvinylidene Fluoride or PVDF) coatings with clear top coat.

e. HPC-5: High-Performance Coating to Separate Dissimilar Metals: and where coal tar epoxy is specified in other Sections of the Contract Documents.

f. HPC-6: High-Performance Zinc-rich Primer for field touch-up and spot repair and locations specifically indicated to receive primer only.

g. HPC-7: High-Performance Coating for Exposed Metal for Rail Potential Electrical Isolation: High Solid Epoxy Coating with UV Stable Coating.

h. Other High-Performance Coatings as described in this Section.

1.02 REFERENCES

A. This Section incorporates by reference the current versions of the following documents:

1. American Architectural Manufacturers Association (AAMA):

a. AAMA 605 - Voluntary Specification, Performance Requirements and Test Procedures for Superior Performing Organic Coatings on Aluminum Extrusions and Panels.

2. American Association of State Highway and Transportation Officials (AASHTO):

a. AASHTO M298 - Standard Specification for Coatings of Zinc Mechanically Deposited on Iron and Steel.

3. ASTM International:

a. ASTM B117 - Standard Practice for Operating Salt Spray (Fog) Apparatus.

b. ASTM C1028 - Standard Test Method for Determining the Static Coefficient of Friction of Ceramic Tile and Other Like Surfaces by the Horizontal Dynamometer Pull-Meter Method.

c. ASTM D256 - Standard Test Methods for Determining the Izod Pendulum Impact Resistance of Plastics.

d. ASTM D257 - Standard Test Methods for DC Resistance or Conductance of Insulating Materials.

e. ASTM D523 - Standard Test Method for Specular Gloss.

f. ASTM D695 - Standard Test Method for Compressive Properties of Rigid Plastics.

g. ASTM D790 - Flexural Properties Testing.

h. ASTM D822/D822M - Standard Practice for Filtered Open-Flame Carbon-Arc Exposures of Paint and Related Coatings.

i. ASTM D968 - Standard Test Methods for Abrasion Resistance Organic Coatings by Falling Abrasive.

j. ASTM D2240 - Standard Test Method for Rubber Property—Durometer Hardness.

k. ASTM D2244 - Standard Practice for Calculation of Color Tolerances and Color Differences from Instrumentally Measured Color Coordinates.

l. ASTM D3359 - Standard Test Methods for Measuring Adhesion by Tape Test.

m. ASTM D3361/D3361M - Standard Practice for Unfiltered Open-Flame Carbon-Arc Exposures of Paint and Related Coatings.

n. ASTM D4214 - Standard Test Methods for Evaluating the Degree of Chalking of Exterior Paint Films.

o. ASTM D4541 - Standard Test Method for Pull-Off Strength of Coatings Using Portable Adhesion Testers.

4. MPI – Master Painters Institute Architectural Painting Specification Manual: For application procedures.

5. Society for Protective Coatings (SSPC):

a. SSPC - SP 1 Solvent Cleaning.

b. SSPC - SP 2 Hand Tool Cleaning.

c. SSPC - SP 3 Power Tool Cleaning.

d. SSPC - SP 6 Commercial Blast Cleaning.

e. SSPC - SP COM Surface Preparation Commentary Steel and Concrete Substrates.

1.03 SUBMITTALS

A. Submit complete high performance coating system submittals for all iron and steel work prior to or in conjunction with the steel shop drawings to assure compatibility between steel shop primer and intermediate and finish high performance coatings. This submittal will not be considered complete and acceptable if either product is not compatible with each other.

B. Product Data: Submit data on coating system, including:

1. Manufacturer's name, product name and/or catalog number, and general product category (e.g., "alkyd enamel").

2. MPI product number (e.g.,"MPI #47").

3. Cross-reference to specified coating system(s) product is to be used in; include description of each system.

4. Coating manufacturer's most current technical data sheets on each product showing application procedures, coverage rates and dry mil thicknesses.

5. Additive requirements for Low-Temperature application.

C. Samples: Using approved materials, submit samples of finish coat, illustrating colors, gloss and finishes selected. For each separate color, prepare sample with exposed portions of each successive coat, on required number of 8-inch by 10-inch card stock draw-downs and one 12-inch by 12-inch sample of each color on substrate material matching work to be finished, or sheet metal which shall be representative of the in-place steel substrates. Label samples with color number, name and date. Provide samples of each color as indicated using complete coating system by application method proposed for the finish Work. Submit additional samples if required for approval. Provide samples of both the thermo-curing and air drying PVDF coatings.

D. Mockup for HPC-2 and HPC-3, In Place: Provide a full-size, 10-foot minimum height mockup of an exterior structural column to serve as the standard for the work of this Section. Comply with the following:

1. Application of materials shall be performed using same materials, methods, and procedures to be used throughout the balance of the Work.

2. Mock up shall incorporate specified surface preparation, including field touch-up of welds and abrasions with specified primer, tie/intermediate, as required, and finish top coatings, including Low-Temperature additive as proposed in the finish Work, as applicable.

3. Resident Engineer will direct location and extent of exterior structural steel column to be coated.

4. Notify Resident Engineer in advance of dates and times when mockup shall be completed.

5. Resident Engineer's review and approval of mock up shall include, but not necessarily be limited to:

a. Uniformity in color, gloss, texture, and hide characteristics of high-performance finish.

b. Applicator's ability to provide continuous film of uniform thickness, free from surface imperfections which show evidence of poor workmanship or the coating's inability to be applied in the proposed application method.

6. Obtain Resident Engineer's approval of mockup before starting High-Performance Coatings.

7. If the Resident Engineer determines that mockup does not meet requirements for accepted appearance, repaint using revised methods.

8. Approved mockup may become part of the completed Work, if maintained undisturbed at time of Acceptance.

E. Manufacturer's Installation Instructions: Indicate special surface preparation procedures and perimeter conditions requiring special attention.

F. Manufacturer's Certificate: Certify that products meet or exceed specified requirements.

G. Certification:

1. By manufacturer that all paints and coatings do not contain any of the prohibited chemical specified; GreenSeal GS-11 shall constitute acceptable certification or per LEED certification VOC limit requirements, as applicable.

H. Applicators Quality Control procedures for shop and field painting and coating.

I. Manufacturers and applicators qualifications, per Article 1.06, herein: For all coating systems.

J. Field Quality Control Reports.

K. Maintenance Data: Submit data on cleaning, touch-up, and repair of painted and coated surfaces.

L. Warranties: Provide each warranty listed.

M. LEED Submittals:

1. Where LEED certification is required by the project, submit the same documentation for approval as required by GBCI as a project submittal. Highlight the relevant LEED information.

2. LEED documentation is to be submitted separately and titled LEED SUBMITTAL.

3. Building Product Disclosure and Optimization credit data: Submit data to support the LEED SUBMITTAL.

1.04 MAINTENANCE MATERIAL SUBMITTALS

A. Color Mix Formula: In lieu of extra stock materials, submit a single submittal including the following:

1. Mix formula for each color, in measured increments of 48ths of an ounce.

2. Paint manufacturer, color, and identification number.

3. Manufacturer of base.

4. Five color chips of each color.

5. Location list of where each color was applied.

1.05 QUALITY ASSURANCE

A. Manufacturer Qualifications: Company specializing in manufacturing the products specified in this Section with minimum three years documented experience.

B. Applicator Qualifications: Company specializing in performing the Work of this section with 3 years minimum documented experience; has completed paint applications similar in magnitude to that indicated for this Project; and is acceptable to the manufacturer for all coating systems. Only skilled painters shall be used with 5 years minimum painting experience and 3 years minimum experience using similar opaque aesthetic coating products by similar application methods.

C. Undivided Responsibility: The shop-applied primer applied in related sections may be produced by a different manufacturer than that of the intermediate and top coatings. The intermediate and top coatings shall be produced by a single manufacturer. Application of a High-Performance Coating system using different manufacturer's primer and intermediate and top coat products is acceptable only in the case of the manufacturer of the intermediate and the top coat products accepting undivided responsibility for the quality and durability of the system application by providing the following:

1. Written confirmation, on the manufacturer’s letterhead, of the compatibility of all products used in the High-Performance Coating System.

2. Written assumption of undivided responsibility, by the intermediate and top coat manufacturer, for the entire High Performance Coating system application’s performance, inclusive of primer, intermediate and top coat products.

3. Warranty for High Performance Coating System, as specified in Article 1.08, herein.

D. Pre-Application Conference: Schedule a Readiness Review Meeting to review the work prior to providing the mock up. Conference shall be attended by Applicator, authorized representative of coating manufacturer, Resident Engineer, and other representatives directly concerned with the performance of work. The following major considerations shall be reviewed at conference:

1. Inspect shop-primed steel for undercutting or all other signs of failure.

2. Inspect concrete surfaces for contamination or other conditions detrimental to coating application.

3. Discuss scaffolding and staging requirements.

4. Review surface preparation and cleaning requirements.

5. Review schedule, sequencing, and time lapse between each separate coat. Discuss re-coat time limits as established by manufacturer.

6. Review methods and materials which are to be used for protection of surrounding buildings and to contain over-spray and falling paint spatter.

7. Discuss environmental conditions, including temperature, relative humidity, wind conditions, sun exposure, and presence of air-borne contaminates under which materials may not be applied.

8. Review quality control procedures, which will be employed in determining the daily environmental conditions, containment, and disposal; include a list of those instruments, which will be used.

9. Review forecasted weather conditions, and procedures for coping with unfavorable conditions: tenting, heat, mechanical ventilation, etc.

1.06 PROJECT CONDITIONS

A. Environmental Requirements: During field application or field touch-up comply with the following:

1. Air temperature and substrate temperature and relative humidity shall be within the manufacturer's established limits. Field apply coating only when the temperature of the surfaces to be coated and surrounding air temperature are above 55 degrees Fahrenheit as verified and documented and are expected to remain so until the coating has fully dried or cured, unless other temperature limits are permitted by manufacturer's printed instructions.

2. Do not apply coatings when the following conditions exist unless requirements of paint manufacturer are more restrictive:

   a. If surface and ambient temperature is above 90 degrees Fahrenheit, or below 55 degrees Fahrenheit.

   b. Do not apply coatings in snow, rain, fog or mist, or when air-borne contaminants are high enough to spoil the paint, or when the relative humidity exceeds 85 percent; or at temperatures currently or potentially falling less than 5 degrees Fahrenheit above the dew point; or to damp or wet surfaces, during inclement weather, or during excessively windy weather.

3. Allow wet or damp surfaces to dry thoroughly and attain the temperature and condition specified before proceeding with or continuing coating applications.

4. Work may continue during inclement weather only if areas and surfaces to be coated are enclosed and the temperature and humidity within the area can be maintained with limits specified as above and per the manufacturer during application and curing periods.

5. Field-applied coatings which, in the judgment of the Resident Engineer, are applied under improper conditions or which do not meet quality control standards shall be appropriately removed and reapplied at no additional cost to Sound Transit.

6. Provide lighting level of 80-foot candles measured mid-height at substrate surface.

7. Restrict traffic from area where coating is being applied or is curing.

8. Protection: Protect surrounding areas, buildings, and cars against damage due to cleaning operations and from paint application. Method of protection is at Contractor's option and shall be reviewed with the Resident Engineer prior to starting the Work. Sound Transit will not be responsible for Contractor's selection or method of protection or failure to protect. Protective coverings shall be secured against wind and shall be vented to prevent collection of moisture on covered surfaces.

9. Provide "wet paint" signs as required to protect newly painted surfaces.

10. Any portions of the surrounding areas, which are damaged as a result of Contractor's activities, shall be restored, refinished, and replaced at Contractor's expense.

1.07 DELIVERY, STORAGE & HANDLING

A. Deliver materials to site in sealed, original, labeled containers bearing manufacturer's name, type of material, brand name, color designation, and instructions for mixing and thinning.

B. Store materials when not in actual use in a place specifically assigned for that purpose which is dry and out of direct sunlight. Store materials in a manner so as not to exceed the manufacturer's temperature limitations.

1.08 WARRANTY

A. The warranty for each coating system shall be countersigned by both the coatings manufacturer for materials, and by the applicator for workmanship. Warranty shall cover all components used in the specific combination for each coating system.

B. Correct Defective Work within a 5-year period beyond substantial completion.

C. Warranty: Include coverage for bond to substrate.

PART 2 - PRODUCTS

2.01 PERFORMANCE REQUIREMENTS

A. Performance Requirements for HPC-1, HPC-2, HPC-3, HPC-4, and HPC-8:

1. Provide coating systems that meet the following minimum performance criteria, unless more stringent criteria are specified:

a. Abrasion resistance: 65, when tested in accordance with ASTM D968.

b. Adhesion: No pick-off, when tested in accordance with ASTM D3359 Cross Cut Tape Test.

c. Salt spray resistance: No field blisters, Max 1/32-inch creepage on scribe, when tested in accordance with ASTM B117 five percent Salt-Fog, 1000 hours.

d. Chalking: Maximum rating 8 for colors, 6 for whites, in accordance with ASTM D659.

e. Accelerated Weathering:

1) 60/60 cycle, 500 cycles, in accordance with ASTM D3361/D3361M, with chalk rating between 9 and 10 in accordance with ASTM D4214, and Color Change no more than 10 delta E units in accordance with ASTM D2244, and Gloss Retention of min. 6 0 percent in accordance with ASTM D523.

2) 5000 hours, in accordance with ASTM D822/D822M, with chalk rating of 8 to 10 in accordance with ASTM D4214, and color change of less than 5 delta E units in accordance with ASTM D2244, and 60 percent gloss retention in accordance with ASTM D523.

f. Coating at structural connections:

1) Faying surfaces and interiors of bolt holes for bolted structural steel connection in steel that is coated under this Section shall

receive only primer prior to erection. Primer shall meet or exceed slip coefficient requirements for fully coated connections from AISC for buildings and AASHTO for bridges and tunnels.

2) Provides Class B faying surface of slip-critical joints in accordance with ASTM C1028.

3) Additional requirements:

a) Solids by Volume: Minimum 63 percent.

b) Minium Zinc by weight in cured film: 82 percent.

c) Minimum net weight per gallon: 23 pounds.

B. Performance Requirements for HPC-5:

1. Abrasion resistance: 65, when tested in accordance with ASTM D968.

2. Adhesion: (ASTM D3359) at 14 days: 4A.

3. Salt spray resistance: No field blisters, Max 1/32-inch creepage on scribe, when tested in accordance with ASTM B117 five percent Salt-Fog, 1000 hours.

4. VOC content where used inside the building envelope: < 100 g/L.

C. Performance Requirements for HPC 6:

1. Demonstrated compatibility with HPC-2 and HPC-3 top coatings, and compatibility with existing shop-applied coatings and primers where used as touch-up primer.

2. Must meet requirements of the specified HPC-1, HPC-2, HPC-3, and HPC-4 system when used as touch-up primer.

3. Coating at structural connections:

a. Faying surfaces and interiors of bolt holes for bolted structural steel connection in steel that is coated under this Section shall receive only primer prior to erection. Primer shall meet or exceed slip coefficient requirements for fully coated connections from AISC for buildings and AASHTO for bridges and tunnels.

b. Provides Class B faying surface of slip-critical joints in accordance with ASTM C1028.

c. Solids by Volume: Minimum 63 percent.

d. Minium Zinc by weight in cured film: 82 percent.

e. Minimum net weight per gallon: 23 pounds.

D. Performance Requirements for HPC-7:

1. Provide coating systems that meet the following minimum performance criteria, unless more stringent criteria are specified:

a. Adhesion: > 300 PSI to Metal, when tested in accordance with ASTM D4541.

b. Flexural Strength: >7000 PSI, when tested in accordance with ASTM D790.

c. Hardness: > 84 when tested in accordance with ASTM D2240.

d. Compressive: > 6600 PSI, when tested in accordance with ASTM D695.

e. Electrical Properties: Surface resistivity > 5 Mohm, when tested in accordance with ASTM D257.

f. Impact Strength: > 2.66 ft.lb. /in^2, when tested in accordance with ASTM D256.

g. Tensile Strength: > 2000 PSI, when tested in accordance with ASTM D 638.

h. For outdoor application, the coating must provide UV resistant/ stable.

i. Slip resistant.

j. Properties not affected by deicer.

k. Water resistant.

l. Coatings must be considered noncombustible as defined by NFPA 130 where applied in a manner or to an extent that would present a fire hazard per NFPA 130.

2.02 MANUFACTURERS

A. Subject to compliance with requirements of Quality Assurance Article herein.

B. Paint systems listed are Basis of Design. Other manufacturer's systems are acceptable if approved equal in writing by Sound Transit. Requests for consideration of equal products must include adequate information to demonstrate comparable performance.

2.03 MATERIALS

A. General: Provide complete multi-coat systems formulated and recommended by manufacturer for the applications indicated, in the thicknesses indicated. Number of coats specified does not include filler coats.

B. Maximum volatile organic compound (VOC) content: As limited by applicable regulations of Authority Having Jurisdiction and the Sustainability Checklist or project LEED requirements, whichever is more restrictive.

C. Colors: As indicated in the Contract Documents.

D. Sheen: Finish coats shall have semi-gloss sheen.

E. Coatings: Numbers of Coats and total dry film thicknesses (dft) listed provide a range of acceptable coatings. Apply coats as required to achieve specified dft. Do not exceed maximum dft values.

F. Thinners: Type as supplied or approved by the coating manufacturer. Use thinner only when recommended by the coating manufacturer, and then only in a quantity as indicated on the label.

G. HPC-1:

1. Concrete, Opaque, 2 Coats min.:

a. Tnemec Coatings Co:

1) Two Coats: Enviro-Crete, Series 156 modified Acrylate Elastomer, by Tnemec Company, Inc. Apply to 6-8 mil dry film thickness.

b. PPG:

1) First Coat: Perma-Crete 100 percent Acrylic High Build Interior/Exterior Flat, 4-22XI. 3.2 – 5.8 DFT.

2) Finish Coat: Perma-Crete PITT-FLEX Elastomeric Coating – Smooth, 4-110XI. 5.4- 7.2 DFT.

c. Sherwin Williams:

1) First Coat: Loxon XP.

2) Finish Coat: Loxon XP.

2. Concrete Unit Masonry, Opaque, 3 Coats min.:

a. First Coat:

1) Tnemec 1254 Epoxoblock filler. Apply to 15-25 mil dry film thickness.

2) PPG: Perma-Crete Concrete Block & Masonry Surfacer/Filler, 4-100XI. 8.0- 11.0 DFT.

3) Sherwin Williams: PI Heavy Duty Block Filler.

b. Second Coat:

1) Tnemec Series 156 “Enviro-crete.” Apply to 5-6 mil dry film thickness.

2) PPG: PITT-FLEX Elastomeric Coating – Smooth, 4-110XI. 5.4-7.2 DFT.

3) Sherwin Williams: Loxon XP.

c. Third Coat:

1) Tnemec Series 156 “Enviro-crete.” Apply to 5-6 mil dry film thickness.

2) PPG: PITT-FLEX Elastomeric Coating – Smooth, 4-110XI. 5.4-7.2 DFT.

3) Sherwin Williams: Loxon XP.

H. HPC-2:

1. Type: Zinc Rich Primer/HB Epoxy/Acrylic Polyurethane.

2. Number of Coats: 3 Coats Min.

3. Total Dry Film Thickness: 11-15 mils dft.

4. Surface Preparation: SSPC - SP 6.

5. Primer: Zinc-Rich Urethane Primer, 3 mils dft.:

   a. PPG: Amercoat 68 HS VOC; 2.0-5.0 DFT.

   b. Tnemec Series 90-97 Tneme-Zinc or 394 PerimiPrime.

   c. Sherwin Williams: Corothane I Galva-Pac Zinc (B65G11).

6. Intermediate: High-Build Epoxy, 4 mils dft.:

   a. PPG: Amerlock 2VOC, High Solids Epoxy; 4.0- 8.0 DFT.

   b. Tnemec Series 27 F.C. Typoxy.

   c. Sherwin Williams: Macropoxy 646 B58 Series.

7. Finish: Aliphatic Acrylic Polyurethane, 4 mils dft.:

   a. PPG: Amershield VOC, 3.0-5.0 DFT.

   b. Tnemec Endura-Shield Series 750 UVX.

   c. Sherwin Williams: Acrolon 218 B65 Series.

      1) Low VOC for interior locations: PI WB Acrolon 100 B65 Series.

I. HPC-3:

1. Type: HD Galvanized / Recoatable Epoxy/Hi-Solids Polyurethane, 3 Coats Min. over galvanizing.

2. Total Dry Film Thickness: 11 – 17 mils dft. Over galvanizing.

3. Galvanizing: in accordance with Section 05 05 13 - Shop-Applied Coatings for Metal.

4. Coating Surface Preparation: SSPC - SP 16.

5. Primer: 1 Coat min, Recoatable Epoxy/ Hi-Solids Polyurethane, 3-5 mils dft.:

   a. PPG: Amerlock 400 VOC, High Solids Epoxy; 4.0- 8.0 DFT.

   b. SW: Macropoxy 646 B58 Series.

6. Finish: 2 Coats min., Hi-Solids Aliphatic Acrylic Polyurethane, total 4-6 mils dft.:

   a. PPG: Pitthane Ultra LS Acrylic Aliphatic Urethane, 95-812, 2.0-3.0 DFT.

   b. SW: Acrolon 218. Apply to 2-3 mils dft. per coat.

J. HPC-4:

1. Shop / Factory-Applied Thermocured PVDF Resin Based Coating on prepared substrate: A high performance thermoplastic, organic coating containing a minimum of 70 percent PVDF by weight in the resin system.

2. PVDF Coatings: Apply 3-coat coil coating consisting of 1 coat inhibitive primer, 1 coat PVDF color coating, and 1 coat PVDF clear topcoat.

3. Clean the substrate metal in accordance with manufacturer’s recommendations in the handling and application of the specified product and all compatible primers.

4. The substrate shall be primed in accordance with the manufacturer's recommendations for the substrate material, including chemical conversion coating, if required. Minimum thickness as recommended by the manufacturer for the primer and substrate.

5. Apply and oven-bake the color coat(s) to minimum thickness of 0.8 mil per coat, in accordance with manufacturer's written procedures.

6. Apply and oven-bake clear top coat to minimum thickness of 0.4 mil, in accordance with manufacturer's written procedures.

7. Air-Drying PVDF Resin Based Touch-up Coating: A high performance thermoplastic, organic coating containing a minimum of 70 percent PVDF by weight in the resin system to be used for maintenance and touch-up applications in field:

    a. Apply as touch-up application to shop / factory-applied PVDF finishes.

8. Products:

    a. PPG:

        1) Factory Applied Extrusion Coatings:

            a) PPG UC51742 Primer or Equal, as required by substrate.

            b) Duranar XL Color Topcoat. Dry Film Thickness, ASTM D 7091: 0.20 mil primer coat plus, 1.0 mil color coat and 0.4 mil clear topcoat or Duranar XL clear topcoat, 1.6 mil total minimum thickness three-coat system.

        2) Coil Coatings: PPG Duranar XL, Duranar GR. Dry Film Thickness, ASTM D 7091: 0.15 mil primer coat plus 0.70 mil color coat and 0.45 mil clear topcoat or Duranar GR clear topcoat, 1.3 mil total minimum thickness [three-coat system].

        3) Air Drying PVDF: Coraflon® ADS, or Equal as required by substrate and finish.

    b. Sherwin Williams:

        1) Fluropon 70 percent PVDF.

K. HPC-5:

1. Type: HB Cathodic-protection Epoxy coating, to isolate dissimilar metals, where recommended by envelope system manufacturers, and where coal tar epoxy is indicated elsewhere in the Contract Documents. Two coats, Min. high-build, two-part, SSPC - Paint 16 at locations detailed or where recommended by envelope system manufacturers. Manufacturer listed dry film thicknesses are to be used as a min. dft. for the system.

2. Products:

    a. PPG:

        1) PPG: Sigmashield 880, 6-40 mils DFT per coat.

2) Low VOC for interior locations: Amerlock 2 VOC @ 4-8 mils DFT.

b. Sherwin Williams:

1) Dura-Plate UHS Epoxy: 1 Ct. @ 18-22 mils DFT or 2 coats @ 10-12 mil DFT each.

c. SIKA: Sikaguard-62.

L. HPC-6:

1. Zinc-Rich Urethane Primer: SSPC Paint 40:

a. Number of Coats: 1 Coat min.

b. Total Dry Film Thickness: Match HPC system being repaired, or as required below for primer-only locations.

c. Surface Preparation: as required per Article 3.05: PROTECTION AND TOUCH-UP WORK .

d. Products:

1) PPG: Amercoat 68 HS VOC; 3.0-5.0 DFT.

2) Sherwin Williams: Corothane I Galva-Pac Zinc, 3.5 DFT.

3) Tnemec Series 90-97 Tneme-Zinc.

M. HPC-7:

1. Type: Epoxy and UV stable coating.

2. Number of Coats: Per manufacturer recommendation.

3. Total Dry Film Thickness: Per manufacturer recommendation.

4. Surface Preparation: Per Manufacturer recommendation.

5. Finish coat: Approved for UV protection per manufacturer recommendation.

PART 3 - EXECUTION

3.01 EXAMINATION

A. Verify existing conditions before starting work.

B. Verify that substrate surfaces are ready to receive work as instructed by the coating manufacturer. Obtain and follow manufacturer's instructions for examination and testing of substrates. Coating applicator shall inspect the primed surfaces. Should inspection reveal any signs of primer failure, corrosion on substrate, conditions detrimental to the performance of this work, or window of recoat time has been exceeded, such failure and/or conditions shall be immediately reported to the Contractor. It shall be the Contractor's responsibility to see that the surfaces are put into acceptable condition.

C. Coating applicator shall be required to clean surfaces as hereinafter specified to remove all dust, dirt, and other surface contamination. Commencement of work constitutes acceptance of surfaces and conditions.

D. Cementitious Substrates: Do not begin application until substrate has cured 28 days minimum and measured moisture content is not greater than 16 percent.

E. Masonry: Verify masonry joints are struck smooth and mortar is fully cured.

3.02 SURFACE PREPARATION

A. General:

1. Surface preparations and cleaning procedures shall be in strict accordance with the instructions and specifications of the coating manufacturer and with the requirements herein.

2. Remove substances that would bleed through finished coatings. If not removable, seal surface with shellac.

3. Remove finish hardware, fixture covers, and accessories and store. Protect items that are not removable.

4. Cleaning and Touch-Up for abraded areas in field erection and fabrication shall be completed in conformance with manufacturer’s recommendations.

B. Cleaning of Shop-Primed Surfaces: Thoroughly clean steel surfaces to remove all rust, scale, dirt, grease, and other foreign material from surfaces, connections, bolts, nuts, and areas around welds surface oils and other contaminants. Clean surfaces using power washing equipment and non-phosphate, biodegradable chemical cleaner:

1. Field test on a small area to determine the most effective method (type of nozzle employed, operating pressure, and distance of nozzle from surface) to achieve maximum cleaning results without damaging or etching the existing primer.

2. After washing with cleaner, power wash surfaces thoroughly with fresh water under high pressure to remove all traces of the chemical cleaner.

C. Ferrous Metal:

1. Solvent clean.

2. Remove loose rust, loose mill scale, and other foreign substances hand tools according to SSPC - SP 2 or power tools according to SSPC - SP 3.

3. Protect adjacent surfaces and materials not receiving coating from overspray; mask if necessary to provide adequate protection. Repair damage.

D. Cleaning For Galvanized/Galvannealed Surfaces: Thoroughly clean steel surfaces to remove surface oils and other contaminants in accordance with SSPC - SP 1:

1. Follow manufacturer's additional requirements for the removal of soluble salts as may be required in accordance with SSPC - SP COM.

2. Ensure that all dirt, grease, oil, soil, drawing compounds, and organic compounds are fully removed from the surface prior to priming.

3.03 APPLICATION OF COATINGS

A. Mixing: Mix coating materials in accordance with the manufacturer's instructions and directions. Mix often enough during application to keep the coatings uniform and to ensure complete dispersion of pigment and a uniform composition:

1. Prepare multiple component coatings using all of the contents of the container for each component as packaged by the manufacturer. Mixing of partial kits will not be permitted. Multiple component coatings that have been mixed shall not be used beyond their pot life. Only the components specified and furnished by the manufacturer, including thinner if required, shall be mixed.

2. Intermediate coat primer may be thinned for spray applications, in accordance with manufacturer's most current printed technical data sheet.

3. Accelerator may be used in intermediate coat and finish coat to enable faster cure time during Low Temperature applications when approved by Resident Engineer; use accelerator type as supplied by the manufacturer, and then only in a quantity as indicated on manufacturer's most current printed technical data sheet.

B. Application Method: Apply both intermediate coat and finish coat in a full application method, in accordance with the manufacturer's most current printed technical data sheet. Use techniques best suited for substrate and type of material being applied:

1. Spray Application: Spray painting shall be accomplished with airless spray equipment or conventional spray equipment; pressure settings, application technique, spray tip, mesh filter screens, and mesh tip strainer shall be as recommended by the coating manufacturer for each separate system.

2. Apply each coat within the manufacturer's recommended recoating time periods. Should time period for application be exceeded, Contractor shall then follow manufacturer's most current printed technical data sheet which may include an additional prime coat or scarification at no additional cost to Sound Transit.

3. When applying paint, overlap each pass 50 percent followed by cross-hatch pattern.

4. During application of each coating, remove all foreign material from applicators (brush, rollers or pads) and protect wet surfaces from contamination of air borne dust and debris.

C. Apply each coat of paint as a continuous film of uniform thickness, free from holidays, sags, crawls, pinholes, blisters, unevenness in color, or other evidence of poor workmanship. Repaint thin spots or areas missed in the application and allow to dry before applying next coat of paint. Give special attention to ensure that surfaces, such as edges, corners, crevices, welds and exposed fasteners receive a dry film thickness equivalent to that of flat surfaces:

1. Coverage for paint material is specified for both the minimum and maximum dry film thickness in mils.

D. Maintain Cure Times: Provide full cure times necessary to resist direct contact with moisture. Comply with manufacturer's requirements and Contractor’s approved quality control procedures based on actual site conditions.

E. Priming:

1. Apply primer to all surfaces, unless specifically not required by coating manufacturer. Apply in accordance with coating manufacturer's instructions.

2. Concrete Unit Masonry: Apply masonry filler to thickness required to provide a smooth, monolithic, pinhole-free film surface with a minimum thickness of 30 mils.

F. Intermediate Coats:

1. Repair, and recoat any blisters, runs or sags in primer coat prior to application of intermediate coats.

2. Intermediate coats shall fully cover and hide primer coat.

G. Finish Coats:

1. Repair, and recoat any blisters, runs or sags in previous coats prior to application of finish coats.

2. Finish coats shall fully cover and hide intermediate coat.

3.04 FIELD QUALITY CONTROL

A. Dry Film Thickness Testing: Contractor shall engage the services of a qualified testing and inspecting agency to inspect and test coatings for dry film thickness.

B. Contractor shall touch-up and restore coated surfaces damaged by testing.

C. If test results show that dry film thickness of applied coating does not comply with coating manufacturer's written recommendations or these specifications, Contractor shall repair areas that does not meet quality standards to provide dry film thickness that complies with coating manufacturer's written recommendations and pay for re-testing.

3.05 PROTECTION AND TOUCH-UP WORK:

A. General: Before final acceptance of the Work, Contractor shall repair or re-finish coated surfaces which have been damaged at no additional cost.

B. Areas of chipped, peeled, or abraded coatings shall be hand or power sanded, feathering the edges. Prime and finish coat the areas using the same material as originally scheduled. Depending on the extent of repair and its appearance, an overall finish coat to a natural break point may be required by the Resident Engineer to achieve uniform appearance.

C. Field Repair of Zinc/Epoxy/Urethane Paint Systems:

1. Where damage is limited to the epoxy or urethane coatings, use hand tool cleaning in accordance with SSPC – SP 2 or power tool cleaning, in accordance with SSPC - SP 3, to visibly damaged areas. Feather edges by mechanical means. Spot prime with the epoxy and topcoat with the specified polyurethane.

2. For minor scratches to the polyurethane top coat, clean and scuff sand the damaged area and apply the polyurethane in accordance with manufacturer’s recommendations.

3. Scratches, gouges, and other damaged areas where the substrate is exposed, spot field blast in accordance with SSPC - SP 6. Spot prime with organic zinc, followed by epoxy and urethane in accordance with Contract Specifications.

4. Solvent clean in accordance with SSPC - SP 1.

D. Field Repair of Factory-Applied PVDF Coating Systems:

1. Apply approved air-drying PVDF or other approved touch-up coatings in accordance with manufacturer's instructions, and AAMA 605.2 to thicknesses specified.

2. For minor scratches to the PVDF top coat, clean and scuff sand the damaged area and apply the air-drying PVDF coating in accordance with manufacturer's recommendations.

3. Apply in uniform thickness coats, without runs, drips, pinholes, brush marks, or variations in color, texture, or finish. Finish edges, crevices, corners, and other changes in dimension with full coating thickness.

4. Color and gloss of touch-up coating shall match exactly the color and gloss of the shop-applied coatings.

5. Apply PVDF touch-up coating to achieve a minimum thickness of 1.2 mil, including prime coat.

E. Coat connectors and disturbed surfaces to match adjacent surfaces. Field touchup work shall use the same sequence and thickness of coatings as specified for the original work. Touchup application efforts shall be done in accordance with the recommendations of the coating manufacturer, subject to acceptability to the Resident Engineer.

F. Coated assemblies shall be adequately protected from handling and shipping damage with the use of padded slings, dunnage, separators, tie downs, or other protective devices and methods. Use of bare cables is prohibited.

G. Protect work of this and other trades, whether to be coated or not, against damage from coatings and coating operations. Correct damage by cleaning, repairing, replacing, or recoating as acceptable to the Resident Engineer. Leave affected surfaces in undamaged condition. Touchup areas shall blend with finish coats. Additional touchup or an additional finish coat shall be required if there are visual imperfections, due to touchup work, as determined by the Resident Engineer, when viewed from a distance of 10 feet.

H. Continue protection, repair procedures, and touchup procedures as necessary so that coatings will be in an undamaged condition at the time of Acceptance.

3.06 CLEANING

A. General: During the progress of the work, remove from the project all discarded paint materials, rubbish, cans and rags. Leave premises clean and in orderly condition.

B. Collect waste material which may constitute a fire hazard, place in closed metal containers, and remove daily from site.

C. Clean surfaces immediately of overspray, splatter, and excess material.

D. After coating has cured, clean and replace finish hardware, fixtures, and fittings previously removed.

E. Cleaning: Upon completion of painting work, clean, restore, or replace, to the satisfaction of the Resident Engineer and at no expense to Sound Transit, all surfaces which have been damaged or surfaces which have been splattered.

END OF SECTION

SECTION 10 14 00

SIGNAGE

PART 1 - GENERAL

1.01 SUMMARY

A. Section includes:

1. Requirements for regulatory and facility signage for identification and instructions as required by the Authority having Jurisdiction (AHJ) and as outlined elsewhere in the contract documents, installed as complete integrated system from a single manufacturer.

2. System related signage and equipment tags when specified in system specifications are to be provided by system contractors.

B. Types of signs required by this work include, but are not limited to:

1. Exit Signs: To identity exits and exit access doors.

2. Stairs, Stairway Landings: To identify access, stair number, floor number and existence or absence of roof access.

   Elevator Machine Room Sign: To indicate room is for authorized personnel use only, (WAC 296-96).

3. Room Identification Signs.

4. Identification signs for confined spaces, access points, and other warning signs complying with AHJ.

5. Accessibility Signage: To indicate accessible parking stalls, areas of rescue assistance, loading zones, toilet facilities, and directional signage to accessible facilities.

6. Posting Maximum Room (Occupancy) Capacity: Provide room capacity sign for assembly rooms and individual spaces as indicated.

7. Posting Maximum Platform (Occupancy) Capacity: Provide capacity sign for platform.

C. All sign copy shall be as required by the various codes involved.

D. Types of room required signs shall be as listed in the SIGN SCHEDULE located in the drawings.

E. ST Customer Signage and Systems Operational Signage are not included in this Section.

1.02 REFERENCES

A. This Section incorporates by reference the latest revisions of the following documents:

1. International Code Council, Inc. (ICC):

   a. Codes adopted by AHJ's and associated codes, including State of Washington amendments, as applicable. See Drawings for current code version.

   b. ICC A117.1.

2. Americans with Disabilities Act (ADA):

a. ADA Accessibility Guidelines (ADAAG).

3. American National Standards Institute (ANSI) / American Society of Mechanical Engineers (ASME):

a. ANSI Z535.2 – Environmental and Facility Safety Signs.

4. Washington State Legislature:

a. Washington Administrative Code (WAC).

1.03 SUBMITTALS

A. Submit:

1. Submit for review, before fabrication and after approval by the applicable code authorities, the following items for each type of sign to be provided in the Project:

a. Product Data: Manufacturer's information relating to the materials, finishes, and fasteners used in each type of sign.

b. Shop Drawings: Show type, size, color and thickness of typography, symbols, wording and attachment proposed for each type of sign.

c. Product Schedule: Include location plan showing the exact location for all signs being provided.

B. Transmit:

1. Warranty.

2. Product Data: Manufacturer's information relating to the materials, finishes, and fasteners used in each type of sign.

3. Installer Qualifications.

1.04 QUALITY ASSURANCE

A. Installer Qualifications: An authorized representative of signage manufacturer for installation and maintenance of units required for this Project.

B. For signs supported by or anchored to permanent construction, advise installers of anchorage devices about specific requirements for placement of anchorage devices and similar items to be used for attaching signs:

1. For signs supported by or anchored to permanent construction, furnish templates for installation of anchorage devices.

1.05 DELIVERY, STORAGE AND HANDLING

A. Handle signage in careful manner to prevent damage or marring of sign surfaces or adjacent finishes.

1.06 WARRANTY

A. Manufacturer’s Warranty: Provide (5) five-year limited warranty covering coating degradation, chalking, fading and delamination.

PART 2 - PRODUCTS

2.01 MANUFACTURER/FABRICATORS

A. Signage Manufacturers/Fabricators:

1. ASI.

2. Fast Signs.

3. Tube Art.

4. Or approved equal.

2.02 MATERIALS

A. Paint Colors: Comply with ANSI Z535.2:

1. Colors based on Matthews Paint:

a. Yellow: P4 MP31456.

b. Blue: ADA Blue MP00366.

c. Red: P3 MP00643.

d. Black: Black.

e. White: White.

2.03 MANUFACTURED PRODUCTS

A. All materials shall be new and free from defects upon completion of the Contractor's work. All materials shall be the products of manufacturers or suppliers with an established reputation for regularly engaged in the furnishing of such materials. All of the Contractor's work shall be performed with the highest degree of skill and completed in accordance with the Contract Documents.

B. Signs:

1. Material: Integral colored high impact UV resistant, colorfast, cast acrylic, nominal 1/8 inch thick with square corner and edges.

2. Type: Unframed.

3. Mounting Material: Wall or vertical surface as follows:

a. Interior: Double sided vinyl tape.

b. Exterior: Liquid adhesive as recommended by manufacturer, or mechanical fasteners as approved.

4. Copy Process: Tactile and Braille; photo-etched plastic and laminated to the insert face in one piece. Individually applied characters and Braille strips are expressly disallowed.

5. Copy and Color: Black, Blue, Red or Yellow as indicated in Appendix A SIGNAGE SCHEDULE.

6. Nominal Size: 8 inches by 10 inches, or as noted.

C. Tactile (ADA) And Non-Tactile Plaque Signs Interior Applications:

1. Tactile Signs: Faces shall consist of minimum 5/8-inch text in all caps. Text shall be raised a minimum of 1/32 inch above the surface of the sign panel. Grade 2 Braille shall be provided in a minimum dot height of .025 inch with inset round glass beads. Braille shall be separated .395 inch (10 mm) minimum from any other tactile characters. Adhesive-fixed characters are not acceptable.

2. Cleanability: Signs shall be cleanable with soap detergents and other similar non-abrasive cleaners without damage to the sign surface. Contractor shall provide complete cleaning instructions.

3. Mounting Material: Use foam tape in all interior areas.

2.04 FABRICATION

A. Typography shall comply with code requirements. All lettering shall be executed in such a manner that all edges and corners of the letter forms are correctly spaced, true, clean, and photographically precise and shall accurately reproduce the letter form.

B. Type face shall be Humanist 777 Bold Condensed, unless otherwise noted, upper and lower case, unless otherwise required by code:

1. Letter Spacing: Tracking = 25.

2. Color: Refer to 3.06 SIGNAGE SIGN TYPES for specific letter colors on backgrounds:

a. White letters on Black background.

b. Black letters on Yellow background.

c. White letters on Red background.

d. White letters on Blue background

e. Red letters on yellow background, unless otherwise indicated.

3. ADA Compliant: ICC A117.1.

2.05 SOURCE QUALITY CONTROL

A. Source Limitations: Obtain each sign type through one source from a single manufacturer.

PART 3 - EXECUTION

3.01 INSTALLATION

A. Locate sign units and accessories where indicated, or directed by Resident Engineer using mounting methods of the type described and in compliance with the manufacturer's instructions:

1. Comply with ADAAG and ICC A117.1.

B. Install signs level, plumb, and at the height indicated, with sign surfaces free from distortion or other defects in appearance.

C. Signs shall be detailed to make all edges less vulnerable to prying or removal.

D. All plaque signs shall be flush mounted, leaving no space behind sign, and installed using tamper-proof fasteners.

3.02 REMOVAL

A. Remove construction debris from project.

B. After installation completion, remove temporary coverings and protection to adjacent work areas.

3.03 REPAIR

A. Repair scratches and other damage which might have occurred during installation. Replace components where repairs were made but are still visible to the unaided eye from a distance of 5 feet.

3.04 CLEANING

A. Clean installed products in accordance with manufacturer's instructions prior to Acceptance.

3.05 PROTECTION

A. Coordinate installation with adjacent finish materials in manner not to damage adjacent surfaces.

3.06 SIGNAGE SIGN TYPES

A. Schedule: Refer to Signage Schedule in the Drawings for sizes, locations, and layout of signage types, sign text copy, and graphics.

END OF SECTION

EXAMPLES: (On Proceeding Pages)

1. SIGNAGE TYPES

APPENDICES: (On Proceeding Pages)

1. APPENDIX A - SIGNAGE SCHEUDLE

EXAMPLES: SIGNAGE TYPES

Graphics are for guidance only. Coordinate with local AHJ.

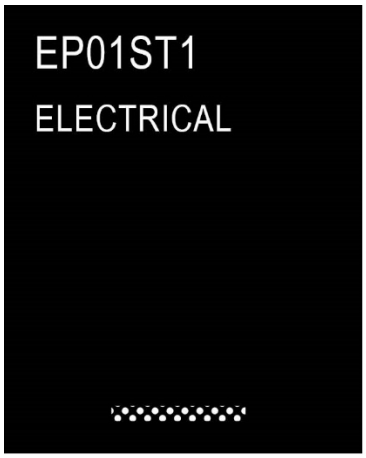

J1.0

Code Room ID

J2.0

J2.2

J2.3

J2.7

Door Closed

J3.0

Restroom ID

J4.0

Stair ID

J4.1

Refuge Area ID

J4.2

Rescue Assistance Area ID

J6.0

Not an exit

J6.1

Exit

J7.0

Occupant Load

(calculation based on NFPA for station platforms)

J7.1

Floor Load

J7.2

Occupant Load

J10.1

Stair Level Sign ID - interior to stairs

J11.0

Non-Storage/ Non-Combustible Materials ID

J13.0

Clean Agent ID

J14.0

Keep Clear

J16.1

J16.2

J16.3

J17.0

Generator Room Diesel Fuel

J18.0

Clearance Bar

END OF EXAMPLES

APPENDIX A

SIGNAGE SCHEUDLE (TO BE COMPLETED BY DESIGN TEAM FOR EACH PROJECT)

ROOM NUMBER	ROOM NAME	SIGN TYPE	NOTES
S03S02	PUBLIC RESTROOM	J3.0	

END OF APPENDIX

SECTION 10 28 00

TOILET AND CUSTODIAL ACCESSORIES

PART 1 - GENERAL

1.01 SUMMARY

A. Section includes:

1. Requirements for the following:

a. Accessories for toilet rooms and utility rooms.

b. Grab bars.

c. Plastic polycarbonate vandal-resistant mirrors for installation in toilets and utility rooms.

B. For non-ST facilities, Sound Transit will provide separate requirements for Toilet and Utility Room Accessories.

1.02 REFERENCES

A. This Section incorporates by reference the latest revision of the following documents:

1. Americans with Disabilities Act Accessibility Guidelines (ADAAG).

2. American National Standards Institute (ANSI):

a. ANSI ICC A117.1 - Accessible and Useable Buildings and Facilities.

b. ANSI Z97.1 - For Safety Glazing Materials Used in Buildings – Safety Performance Specifications and Methods of Test.

3. American Society for Testing and Materials International (ASTM):

a. ASTM A123/A123M - Standard Specification for Zinc (Hot-Dip Galvanized)Coatings on Iron and Steel Products.

b. ASTM A269 - Standard Specification for Seamless and Welded Austenitic Stainless-Steel Tubing for General Service.

c. ASTM A653/A653M - Standard Specification for Steel Sheet, Zinc-Coated (Galvanized) or Zinc-Iron Alloy-Coated (Galvannealed) by the Hot-Dip Process.

d. ASTM A666 - Standard Specification for Annealed or Cold-Worked Austenitic Stainless-Steel Sheet, Strip, Plate, and Flat Bar.

e. ASTM B456 - Standard Specification for Electrodeposited Coatings of Copper Plus Nickel Plus Chromium and Nickel Plus Chromium.

f. ASTM F1178-11 - Standard Specification for Performance of Enameling System, Baking, Metal Joiner Work and Furniture.

1.03 SUBMITTALS

A. Product Data: Provide data on accessories describing size, finish, details of function, attachment methods.

B. LEED Submittals:

1. Where LEED certification is required by the project, submit the same documentation for approval as required by GBCI as a project submittal. Highlight the relevant LEED information.

2. LEED documentation is to be submitted separately and titled LEED SUBMITTAL.

3. Building Product Disclosure and Optimization credit data: Submit data to support the LEED SUBMITTAL.

C. Manufacturer's Installation Instructions: Indicate special procedures and conditions requiring special attention.

D. Manufacturer’s Certificate: Certify that mirrors meet or exceed specified requirements.

1.04 QUALITY ASSURANCE

A. All toilet and utility room accessories are required to comply with Sound Transit’s Design Standards, ADAAG and ANSI/ICC A117.1 and applicable building codes, unless otherwise indicated; in the event of conflicting requirements, comply with the most comprehensive and specific requirements.

1.05 COORDINATION

A. Coordinate accessory locations with other work to prevent interference with clearances required for proper installation, adjustment, cleaning, and servicing of accessories.

1.06 WARRANTY

A. Provide one (1) year warranty that manufacturer agrees to repair or replace toilet accessories that fail in materials or workmanship within specified warranty period excluding finish.

B. Provide five (5) year manufacturer warranty for reflective coating on mirrors and replacement of same.

PART 2 - PRODUCTS

2.01 SYSTEM DESCRIPTION

A. Coordination:

1. Coordinate the work with the placement of internal wall reinforcement and reinforcement of toilet partitions to receive anchor attachments.

2.02 MANUFACTURERS

A. Toilet Accessories, Staff Restrooms:

1. American Specialties, Inc.

2. Bobrick Washroom Equipment, Inc.

3. Bradley Corporation.

4. Zurn.

5. Acorn Engineering Company, Inc.

6. Truebro.

7. Duraclenz.

B. Toilet Accessories, Public Restrooms unless noted otherwise:

1. Duraclenz.

2.03 MATERIALS

A. Accessories - General: Shop assembled, free of dents and scratches and packaged complete with anchors and fittings, steel anchor plates, adapters, and anchor components for installation:

1. Grind welded joints smooth.

2. Fabricate units made of metal sheet of seamless sheets, with flat surfaces.

B. Keys: Provide two (2) keys for each accessory to Sound Transit; master key lockable accessories.

C. Stainless Steel Sheet: ASTM A666, Type 316.

D. Stainless Steel Tubing: ASTM A269, Type 316.

E. Galvanized Sheet Steel: Hot-dipped galvanized steel sheet, ASTM A653/A653M, with G90/Z275 coating.

F. Vandal-Resistant Polycarbonate Mirror: ANSI Z97.1; plastic compound, clear; mirrored coating; silicone abrasion resistant coating for scratch resistance.

G. Fasteners, Screws, and Bolts: Hot-dip galvanized, tamper-proof, security type.

H. Expansion Shields: Fiber, lead, or rubber as recommended by accessory manufacturer for component and substrate.

2.04 ACCESSORIES

A. Toilet Room Accessories:

1. TA-1: Toilet Paper (Roll) Dispenser (TPD): Double roll, surface mounted bracket type, satin finished cast aluminum brackets, eccentric-shaped plastic spindle for 1/2 revolution delivery designed to prevent theft of tissue roll:

a. Basis-of-Design Product: Bobrick, Model No. B2888, or approved equal.

b. Description: Double-roll dispenser.

c. Mounting: Surface-mounted.

d. Capacity: Designed for 4-1/2- or 5-inch- diameter tissue rolls.

e. Material and Finish: Stainless Steel, No. 4 finish (satin).

2. TA-2: Paper Towel Dispenser: Satin-finish stainless steel. Seamless beveled flange:

   a. Manufacturer: Duraclenz or approved equal.

   b. Description: Recessed Convertible Paper Towel Dispenser/Waste Receptacle.

   c. Mounting: Recessed.

   d. Capacity: 12 gallons.

   e. Material and Finish: Stainless Steel, No. 4 finish (satin).

3. TA-3: Soap Dispenser (SD): Liquid soap dispenser, wall-mounted, surface, for with stainless steel cover and horizontal stainless-steel tank and working parts; push type soap valve, check valve, and window gage refill indicator, tumbler lock:

   a. Basis-of-Design Product: Bobrick, Model No. B-4112, or approved equal.

   b. Description: Designed for dispensing soap in liquid or lotion form.

   c. Mounting: Vertically oriented, surface-mounted.

   d. Capacity: 40 oz.

   e. Lockset: Tumbler type.

   f. Refill Indicator: Window type.

4. TA-3A: Soap Dispenser (SD-VR): Automatic foaming soap dispenser, wall-surface mounted, stainless-steel construction, corrosion resistant, hidden cylinder lock.

5. Manufacturer: Duraclenz or approved equal:

   a. Description: Automatic Foaming Soap Dispenser in Protective Case.

   b. Mounting: Vertically oriented, surface-mounted.

   c. Capacity: 1200 ml Pre-packaged foaming soap.

   d. Hardware: Manufacturer's recommended mounting hardware for vandal resistance.

   e. Lockset: Cylinder type, hidden and secure.

   f. Material and Finish: 12-gauge Type 316L Stainless Steel, No. 4 finish (satin).

6. TA-4: Mirrors (MIR): Polycarbonate Vandal-Resistant Mirrors:

   a. Manufacturer: Duraclenz or approved equal.

   b. ANSI Z97.1; plastic compound, clear; mirrored coating; silicone abrasion resistant coating for scratch resistance; stainless steel frame all-around:

      1) Size: 24-inch x 36-inch.

2) Thickness: 0.236-inch.

3) Mirror Adhesive: Chemically compatible with mirror coating and wall substrate.

7. TA-5: Seat Cover Dispenser (SCD): Stainless steel, surface-mounted, reloading by concealed opening at base, tumbler lock:

a. Basis-of-Design Product: Bobrick, Model No. B-221, or approved equal.

b. Mounting: Surface mounted.

c. Minimum Capacity: 250 seat covers.

d. Exposed Material and Finish: Stainless steel, No. 4 finish (satin).

e. Lockset: Tumbler type.

8. TA-6: Grab Bars (GB): Stainless steel, 1-1/2 inches outside diameter, minimum:

a. 0.05-inch wall thickness, nonslip grasping surface finish, concealed flange mounting; 1-1/2 inches clearance between wall and inside of grab bar.

b. Basis-of-Design Product: Bobrick, Model No. B-5806, or approved equal.

c. Mounting: Flanges with concealed fasteners.

d. Material: Stainless steel, 18-gauge thick:

1) Finish: Smooth, No. 4, satin finish on ends and slip-resistant texture in grip area.

e. Outside Diameter: 1-1/4 inches.

f. Configuration and Length: As indicated on Issued for Construction Drawings.

9. TA-7: Surface-Mounted Electric Hand Dryer (EHD):

a. Basis-of-Design Product: Sloan – Xlerator, or approved equal.

b. Description: Surface Mounted, 10 second dry speed, energy efficient.

c. Mounting: Surface mounted.

d. Voltage: 208- 240 volts AC, 1.7 – 5.0 -Amp, 400-1200 Watts, 50/Hz, single phase.

e. Color/Finish: Stainless-steel, brushed finish.

f. Cover Material: One-piece, minimum 16-gauge, Type 304 stainless-steel.

g. Electrical Work Description: Provide wiring, power connection and load testing under work of low-voltage electrical power conduits and cables as stated elsewhere in the Contract Documents.

10. TA-8: Combination Sanitary Napkin/Tampon Vendor (SNV): Stainless-steel:

    a. Basis-of-Design Product: or approved equal.

        1) Surface-mounted: Bobrick Model No. B-47069C, ConturaSeries.

        2) Recessed: Bobrick Model No. B-4706C, ConturaSeries.

    b. Door: Seamless 18-gauge (0.05 inch) door with returned edges and tumbler lock.

    c. Cabinet: Fully welded, 18-gauge (0.05 inch) thick stainless-steel sheet.

    d. Operation: The dispensers shall not require payment for operation.

    e. Identify dispenser's slots without using brand names.

    f. Minimum capacity: 20 napkins and 30 tampons.

11. TA-9: Sanitary Napkin Receptacle Unit (SNR):

    a. Manufacturer: Duraclenz or approved equal:

        1) Heavy gage stainless steel, recessed type, with all-welded construction.

        2) Door shall be 20-gauge (0.38-inch) stainless steel, satin finish with a magnet catch and cable door-swing limiter, removable receptacle.

12. TA-10: Undersink Anti-Burn Protection (UBP): Drain piping and angle valve supply cover insulation for ADA/Barrier-Free Facility compliance:

    a. Basis-of-Design Product: Lav Guard 2 manufactured by Truebro, Inc.; or approved equal.

    b. Material: Anti-microbial, molded, closed cell vinyl covers:

        1) 1/8-inch nominal wall thickness; 70-80 Shore A hardness.

        2) Finish: Smooth, high gloss.

        3) Color: To be selected from manufacturer's standard colors by Resident Engineer.

13. TA-11: Surface Mounted Waste Receptacle (SMWR): Projecting waste receptacle, stainless steel:

    a. Basis-of-Design Product: Bobrick Model No. B-277, or approved equal.

    b. Description: Surface-mounted Waste Receptacle with reusable, heavy-duty waste receptacle liner.

    c. Mounting: Surface-mounted.

    d. Capacity: 12.75 gallons.

    e. Material and Finish: Stainless-steel, No. 4 finish (satin)

B. Utility Rooms Accessories:

1. Combination Utility Shelf/Mop and Broom Holder (MH):

a. Basis-of-Design Product: Bobrick, Model No. B-239 x 34, or approved equal.

b. Description: Unit with shelf, holders, and rod suspended beneath shelf.

c. Length: 34 inches.

d. Material and Finish: Stainless steel, No. 4 finish (satin):

1) Shelf: Not less than 18-gauge (nominal 0.05-inch) thick stainless steel.

e. Hooks: 4, 12-gauge (0.11 inch) stainless steel rag hooks under shelf.

f. Mop/Broom Holders: 3 under shelf.

2.05 FINISHES

A. Stainless Steel: No. 4 satin brushed finish, unless otherwise noted.

B. Chrome/Nickel Plating: ASTM B456, SC 2, satin finish, unless otherwise noted.

C. Baked Enamel: Comply with ASTM F1178-11. Minimum one (1) coat primer and minimum two (2) coats epoxy baked enamel.

D. Galvanizing for Items Other than Sheet: Comply with ASTM A123/A123M; galvanize ferrous metal and fastening devices.

E. Back paint components where contact is made with building finishes to prevent galvanic corrosion.

PART 3 - EXECUTION

3.01 EXAMINATION

A. Verify existing conditions before starting work.

B. Verify exact location of accessories for installation.

C. Verify that blocking, reinforcing plates, and concealed anchors are installed in walls and ceilings.

3.02 PREPARATION

A. Deliver inserts and rough-in frames to site for timely installation.

B. Provide templates and rough-in measurements as required.

C. Clean surfaces to receive accessories. Protect surrounding elements from damage during accessory installation.

3.03 INSTALLATION

A. Install accessories in accordance with manufacturers' instructions.

B. Install plumb and level, securely and rigidly anchored to substrate.

C. Mounting Heights and Locations: As required by accessibility regulations and as indicated on Issued for Construction Drawings.

D. Mirrors:

1. Install mirrors in accordance with manufacturers' recommendations.

2. Set mirror plumb and level, free of optical distortion.

3. Set mirrors with edge clearance free of surrounding construction including countertops or backsplashes.

3.04 ADJUSTING

A. Adjust accessories as required to provide smooth operation and trouble-free servicing.

3.05 CLEANING

A. Remove labels after Work is complete, prior to cleaning.

B. Clean and polish exposed surfaces of accessories using accessory manufacturer's recommended procedures and cleaning agents.

3.06 PROTECTION

A. Provide coverings as required to protect installed accessories.

B. After installation of mirrors, mark pane with an 'X' by using removable plastic tape or paste.

END OF SECTION

SECTION 10 44 00

FIRE PROTECTION SPECIALTIES

PART 1 - GENERAL

1.01 SUMMARY

A. Section includes:

1. Requirements for the following:

a. Fire extinguishers:

1) FE-1: Multipurpose dry chemical for general use, bracket-mounted unless noted otherwise. Size varies by location and travel distance. See ST Requirements Manual set 601 for layout criteria.

2) FE-2: B-C dry chemical for electrical rooms, bracket-mounted unless noted otherwise.

3) FE-3: Carbon Dioxide Type, bracket-mounted unless noted otherwise.

b. Fire extinguisher cabinets:

1) FEC-1: Semi-Recessed Outdoor Cabinet with FE-1.

2) FEC-1a: Surface-Mounted Outdoor Cabinet with FE-1.

3) FEC-2: Fire-rated semi-recessed cabinet with FE-1.

4) FEC-3: Non-rated surface mounted cabinet with FE-2.

5) FEC-4: Fire-rated surface-mounted cabinet with emergency microphone.

c. Emergency responder equipment cabinet (EREC).

d. Accessories.

1.02 REFERENCES

A. This Section incorporates by reference the latest revisions of the following documents:

1. National Fire Protection Association (NFPA):

a. NFPA 10 - Standard for Portable Fire Extinguishers.

2. Underwriters Laboratories Inc. (UL):

a. UL Fire Protection Equipment Directory.

1.03 SUBMITTALS

A. Product Data: For each type of product indicated - Include rating and classification, material descriptions, dimensions of individual components and profiles, and finishes for fire extinguishers, cabinets, and mounting brackets.

B. Product Schedule: For fire extinguishers – Coordinate final fire extinguisher schedule with fire protection cabinet schedule to ensure proper fit and function.

C. Shop Drawings: Indicate cabinet physical dimensions, rough-in measurements for recessed cabinets, wall bracket mounted measurements, and location.

D. Manufacturer's Installation Instructions: Indicate special criteria and wall opening coordination requirements.

1.04 QUALITY ASSURANCE

A. NFPA Compliance: Fabricate and label fire extinguishers to comply with NFPA 10.

B. Single Source Responsibility: Obtain extinguishers and cabinets from a single manufacturer and installer.

C. Fire Extinguishers: Listed and labeled for type, rating, and classification by UL or an Independent Testing Laboratory acceptable to the Authority Having Jurisdiction.

D. Coordination: Verify that cabinets are sized to accommodate type and capacity of extinguishers indicated.

PART 2 - PRODUCTS

2.01 PERFORMANCE REQUIREMENTS

A. Conform to NFPA 10.

B. Provide extinguishers classified and labeled by Underwriters Laboratories Inc. for the purpose specified and indicated.

2.02 MANUFACTURERS

A. Fire Extinguishers:

1. Amerex Corporation.

2. Ansul Incorporated; Tyco International Ltd.

3. Badger Fire Protection; a Kidde company.

4. JL Industries, Inc.

5. Larsen's Manufacturing Co.

6. Potter-Roemer.

7. Pyro-Chem; Tyco Safety Products.

B. Fire Extinguisher Cabinets:

1. JL Industries, Inc.

2. Larsen's Manufacturing Co.

3. Potter-Roemer.

4. Safety One Industries.

2.03 EQUIPMENT

A. Fire Extinguishers:

1. Fire Extinguishers - General: Comply with product requirements of NFPA 10 and applicable codes, whichever is more stringent:

a. Provide extinguishers labeled by Underwriters Laboratories Inc. for the purpose specified and indicated.

2. FE-1 - Multi-purpose Dry Chemical Type Fire Extinguishers:

a. Nominal Size: 10 pounds.

b. UL-rated 4A:40B:C or better.

c. Finish: Red polyester powder coat.

3. FE-2 - Fire Extinguishers for Electrical Rooms: BC Dry Chemical Type Fire Extinguishers:

a. Nominal Size: 5 pounds.

b. UL-rated 10B:C or better.

c. Finish: Red polyester powder coat.

4. FE-3: BC Carbon Dioxide Type extinguisher:

a. Nominal Size: 5 pounds.

b. UL-Rated: 5B:C or better.

c. Finish: Red polyester powder coat.

2.04 MOUNTING BRACKETS

A. Mounting Brackets: Manufacturer's standard galvanized steel, designed to secure fire extinguisher to wall or structure, of sizes required for types and capacities of fire extinguishers indicated.

2.05 CABINETS

A. Fire Extinguisher Cabinets:

1. FEC 1: Outdoor Cabinet:

a. Surface-mounted type with corrosion resistant tub:

1) Basis of design: Safety One Industries: Heavy Duty Outdoor Series Fire Extinguisher Cabinet.

2. FEC-1a: Outdoor Cabinet:

a. Semi-recessed type with corrosion-resistant tub.

b. Basis of design: J.L. Industries Cosmopolitan Series, with W-style door.

c. Trim: 1-1/2-inch projection square return trim.

3. FEC-2: Cabinet Configuration: Semi-recessed type with fire-rated tub:

   a. Basis of design: J.L. Industries Cosmopolitan Series, with W-style door.

   b. Trim: 1-1/2-inch projection square return trim.

   c. Fire-rating: per contract documents.

4. FEC-3: Cabinet Configuration: Surface type with standard tub:

   a. Basis of design: J.L. Industries Cosmopolitan Series, with W-style door.

   b. Trim: 1-1/2 inch wide face.

   c. Door: 0.036 inch thick, reinforced for flatness and rigidity; latch. Hinge doors for 180 degree opening with continuous piano hinge.

   d. Lock and handle: Cylinder lock with cam and safety release to permit opening of door with sharp pull; aluminum or zinc plated handle:

      1) Basis of Design: J.L. Industries "Saf-T-Lok".

5. FEC-4: Cabinet Configuration: Recessed lockable cabinet with fire-rated tub. Cabinet to hold emergency microphone:

   a. Basis of Design: J.L. Industries Cosmopolitan Series, with L-style door.

6. Fire Extinguisher Cabinets, General:

   a. Metal: Formed stainless steel sheet; 0.036-inch-thick base metal. Finish - #4 stainless steel.

   b. Door Glazing: Glass, clear, 1/8 inch thick tempered. Set in resilient channel gasket glazing. Unless otherwise noted.

   c. Cabinet Mounting Hardware: Appropriate to cabinet. Pre-drill for anchors.

   d. Weld, fill, and grind components smooth.

   e. Finish of Cabinet Exterior Trim and Door: No. 4.

   f. Finish of Cabinet Interior: White enamel.

B. Emergency Responder Equipment Cabinets:

1. Cabinet:

   a. 18 Gauge, type 304 stainless steel construction.

   b. Dimensions: 36 inches x 24 inches x 78 inches.

   c. Lock: Coordinate with Sound Transit Operations.

2. Shelves:

   a. 18 Gauge, type 304 stainless steel.

   b. Capacity: 400 lbs. per shelf.

   c. Quantity: (4) adjustable in 2-inch increments.

C. Signage:

1. Provide manufactured code-compliant signage at each fire extinguisher or cabinet location.

PART 3 - EXECUTION

3.01 EXAMINATION

A. Examine fire extinguishers for proper charging and tagging:

1. Remove and replace damaged, defective, or undercharged fire extinguishers.

B. Verify rough openings for cabinets are correctly sized and located.

C. Proceed with installation only after unsatisfactory conditions have been corrected.

3.02 INSTALLATION

A. Install fire extinguishers and mounting brackets in locations indicated and in compliance with requirements of the Authority Having Jurisdiction:

1. Mounting Brackets: Install cabinets plumb and level in wall openings, at height above finished floor to top of fire extinguisher indicated in the drawings.

B. Mounting Brackets: Fasten mounting brackets to surfaces, square and plumb, at locations indicated.

END OF SECTION

SECTION 10 81 13

BIRD CONTROL DEVICES

PART 1 - GENERAL

1.01 SUMMARY

A. Section includes:

1. Requirements for the following:

a. Bird deterrent systems to deter birds from landing and nesting where shown and detailed on the drawings, and in locations as follows:

1) Roof and canopy edges, structural surfaces, ledges, light fixtures, signage and openings to cavities and unoccupied spaces susceptible to birds landing and nesting.

2) Elevated guideway surfaces at the column head / girder connections, joints with elastomeric bearings, and drain holes or other openings into the guideway.

2. System types:

a. BCD-1: Post and Wire.

b. BCD-2: Bird Spikes.

c. BCD-3: Bird Spiders.

d. BCD-4: Bird Netting.

e. BCD-5: Bird Wedges.

f. BCD-6: Bird Coil.

3. Audible bird deterrent system for use during construction.

B. Related content:

1. Sheet metal flashing caps as detailed in Issued for Construction Drawings and specified in Section 07 62 00 - Sheet Metal Flashing and Trim.

1.02 SUBMITTALS

A. Submit:

1. Manufacturer's descriptive product data.

2. Shop Drawings:

a. Provide shop drawings for each bird deterrent system. Indicate typical layout in plan and elevation including dimensions and anchoring provisions, type, design and spacing for each substrate and condition. For BCD-4 Bird Netting, indicate access locations to routinely serviced items behind the bird net.

b. Submit detail drawings of special accessory components not included in manufacturer's product data.

c. Provide drawings showing temporary location and orientation of all audible bird deterrent components.

d. Wiring diagrams and temporary power requirements.

3. Verification Samples:

a. BCD-1: Post and Wire:

1) Wire support posts for approval.

2) Control wire, 6 inches long each.

b. BCD-2: Bird Spikes:

1) 6-inch-long spike strip for approvals.

c. BCD-3: Bird Spiders:

1) Full assembled product for approval.

2) Attachments.

d. BCD-4: Bird Netting:

1) 12-inch square section of netting.

2) Typical cable and connector.

e. BCD-5: Bird Wedges:

1) Assembled wedge including:

a) 4-foot section indicating profile and finish for approval.

b) Slope extender: 4-foot section.

c) End caps, 2 each type.

d) Mounting Clips.

f. BCD-6: Bird Coil:

1) Strip of coil with minimum 3 loops indicating gauge, diameter and finish.

2) Attachment clips.

4. Manufacturer's Installation Instructions: Indicate preparation and installation instructions.

B. Transmit:

1. Manufacturer's Certificate: Certify that products meet or exceed specified requirements.

2. Qualification Statements:

a. Manufacturer.

b. Installer.

1.03 QUALITY ASSURANCE

A. Manufacturer qualifications: Company specializing in manufacturing the products specified in this Section with minimum 3 years documented experience.

B. Installer Qualifications: Company completely familiar with installation of products similar to those required for this Contract.

C. Mock-Up:

1. Install one pin-and-wire assembly representative of each design required on Contract.

2. Where one design may be used for different penetrating items or in different wall constructions, install one assembly for each different combination.

3. If accepted, mock-up may remain as part of the Work. Remove and replace mock-ups that are not accepted.

1.04 DELIVERY, STORAGE AND HANDLING

A. Store and handle materials to avoid damage to products and injury to Installers.

PART 2 - PRODUCTS

2.01 MANUFACTURERS

A. BCD-1: Post and Wire:

1. Basis of Design: Bird B Gone Inc.; Product: “Bird Wire Post and Wire Bird Deterrent”.

2. Nixalite Inc.; Product: “FliteLine Post and Wire Bird Deterrent”.

3. Bird Busters Co.; Product: “Post and Wire Bird Deterrent”.

B. BCD-2: Bird Spikes:

1. Acceptable manufacturers and products:

a. Bird-B-Gone Stainless Steel Bird spikes.

b. Nixalite Inc.; Product: Premium Bird Barrier Spikes.

c. Bird Busters Co.; Product: Stainless Steel Spikes.

B. BCD-3: Bird Spiders:

1. Basis of Design Manufacturer: Bird B Gone Inc; Product: Bird Spider 360.

C. BCD-4: Bird Netting:

1. Bird Barrier America, Inc.: Stealth Net.

2. Bird-B-Gone: Bird Net 2000.

D. BCD-5: Bird Wedges:

1. Basis of Design: Bird B Gone, Inc:; Product: “Bird Slope”.

E. BCD-6: Bird Coil:

1. Basis of Design: Bird Barrier, “Bird-Coil”

F. Construction Period Audible System Manufacturers:

1. Bird-X, Sonic Bird Control, “BirdXPeller PRO”.

2. Bird-B-Gone, “Bird Chase Super Sonic”.

2.02 MANUFACTURED PRODUCTS

A. BCD-1: Post and Wire:

1. Stainless steel posts with flat base minimum 4 inches by 4 inches for adhesive attachment of system to roof membrane substrate.

2. Nylon-coated stainless-steel wire.

3. Stainless steel tension springs.

4. Finish: Natural stainless-steel finish.

B. BCD-2: Bird Spikes:

1. Materials:

a. Spikes: stainless steel.

b. Width of coverage: As required.

c. Number of spikes: Minimum 40 spikes per linear foot.

d. Height of spikes: 4-3/4-inches.

e. Base Strip: Flexible. Base can bend up to 360 degrees.

f. Length: 2 ft. sections.

2. Finish: Natural stainless-steel finish.

C. BCD-3: Bird Spiders:

1. Two-foot diameter with stainless steel arms attached to UV protected polycarbonate base.

2. Material: 316 stainless-steel.

D. BCD-4: Bird Netting:

1. Materials:

a. UV stabilized knotted polyethylene net.

1) Color: black.

b. Flame resistant: 270-degree Fahrenheit melting point.

c. Size: 3/4-inch, heavy duty.

d. Stainless-steel cable framework to support bird netting.

e. Hardware: All metal hardware to be stainless steel.

f. Access zippers for serviced items behind the net.

E. BCD-5: Bird Wedges:

1. Material:

a. Prefabricated sloped U.V. protected outdoor grade PVC plastic.

b. Provide Coordinating slope extenders, end caps.

2. Mounting as determined by manufacturer based on project conditions.

F. BCD-6: Bird Coil:

a. Material: Stainless Steel wire, 4-inch or 5-inch coil diameter.

b. Start and end posts with clips at 1 foot intervals.

G. Construction Period Audible System Manufacturers and Components:

1. Bird-X, Sonic Bird Control, “BirdXPeller PRO”.

2. Bird-B-Gone, “Bird Chase Super Sonic”.

3. Sound unit and speaker(s) for one acre coverage.

PART 3 - EXECUTION

3.01 EXAMINATION

A. Verify that installation surfaces are ready to receive architectural bird control. Do not proceed until unsatisfactory conditions have been corrected.

3.02 INSTALLATION

A. Thoroughly clean the surfaces to receive bird deterrent to be free of bird droppings, nesting materials, rust, peeling paint or other debris.

B. Install architectural bird control in accordance with manufacturer's printed instructions.

C. BCD-1: Post and Wire:

1. Attach bird wire posts to metal roof surfaces or to roof membrane with adhesive product approved by roofing manufacturer.

2. Install bird wire posts at spacing specified in manufacturer's installation instructions, for uniform appearance and without end-to-end gaps.

3. Install wire and tension springs as specified in manufacturer’s installation instructions.

D. BCD-2: Bird Spikes and BCD-3: Bird Spiders:

1. Attach base with spikes to surfaces with adhesive product approved by roofing manufacturer.

2. Follow the contours and angles closely; cut or break away to fit properly.

3. Space materials in accordance with manufacturer's recommendations.

E. BCD-4: Bird Netting:

1. Install bird netting per manufacturer's recommendations.

2. Install perimeter cable system to structure with attachments provided for substrate material.

3. Attach netting to cable system tightly with provided rings.

4. Bird netting shall precisely match the area to be protected, ensuring that birds cannot access the protected zone while seamlessly integrating with the architectural design.

5. The maximum distance between attachments shall be per manufacturer's recommendation; maximum of 24-inches.

6. Locate access zippers for serviced items behind the net.

F. BCD-5: Bird Wedges:

1. Install wedge as recommended by the manufacturer, covering the entire depth of the surface.

2. Follow the contours and angles closely.

3. Use End Caps to close off where open.

G. BCD-6: Bird Coil:

1. Install wedge as recommended by the manufacturer.

H. Audible System during construction:

1. Program recorded bird sounds used in audible control devices to control birds typically found in the Puget Sound Region.

3.03 REMOVAL

A. Remove and decommission temporary audible bird deterrent equipment at Final Acceptance.

3.04 FIELD QUALITY CONTROL

A. Inspect finished installations and make adjustments as necessary.

END OF SECTION

SECTION 11 08 00

COMMISSIONING OF EQUIPMENT

NOTE TO DESIGNER:

SECTIONS WITH BRACKETS. E.G., [TEXT] ARE TO BE MODIFIED OR DELETED IF NOT APPLICABLE. ITALICIZED TEXT PROVIDES INSTRUCTION TO THE DESIGNER TO INCLUDE LANGUAGE ON SPECIFIC TOPICS WHEN APPLICABLE. THE INSTRUCTIONS ARE TO BE DELETED WHEN THE SPECIFICATION IS FINALIZED. LANGUAGE NOT IN BRACKETS IS TO BE USED 'AS IS' WITHOUT MODIFICATION OR WITH AN APPROVED SPECIFICATION MODIFICATION REQUEST.

DESIGNER TO DELETE TEXT ABOVE FOR FINAL SECTION

PART 1 - GENERAL

1.01 SUMMARY

A. Section Includes: Commissioning process requirements for Equipment. *[Designer: For most facilities this is focused on fall-arrest. For Maintenance facilities Industrial Equipment is to be identified and included in this specification.]*

1. Level 1 commissioning activities for Equipment.
2. [Support for Level 2 commissioning activities for Equipment.]
   a. [Designer: Adjust Level 2 scope to reflect addition of Industrial or Special equipment associated with a maintenance facility. Level 2 would include validation of functionality between equipment and interfacing or interlocking functions of other equipment and systems]
3. Support for Level 3 commissioning activities related to Equipment.
4. Support for Level 4 commissioning activities related to Equipment.

1.02 REFERENCES

A. This Section incorporates by reference the latest revisions of the following documents:

1. ASTM International (ASTM):
   a. ASTM E165/E165M Standard Practice for Liquid Penetrant Examination for General Industry.
   b. ASTM E709 Standard Guide for Magnetic Particle Testing.
2. American Welding Society (AWS):
   a. AWS B1.10M/B1.10 Guide for the Nondestructive Examination of Welds.

B. Definitions

1. See general commissioning requirements as stated in the Contract Documents for commissioning definitions.

2. Systems, Equipment, and Components: Where these terms are used together or separately, they shall mean "as-built" systems, equipment, and components.

1.03 COORDINATION

A. See general commissioning requirements as stated in the Contract Documents for general coordination requirements related to commissioning.

B. Coordinate completion of Install Verification forms, by the Quality Control Inspector, as identified in the Contractors Quality Control Inspection and Test Plan

1.04 COMMISSIONING ACTIVITIES

A. Furnish labor and material to accomplish building commissioning as specified as part of general commissioning requirements as stated in the Contract Documents, and in this specification, including:

1. Provide to the Testing and Commissioning Manager preliminary O&M information for use in developing commissioning test procedures.

2. Assist the Testing and Commissioning Manager in developing commissioning activity procedures and data forms submittals for work specified in this Section.

3. Provide information to the Testing and Commissioning Manager needed for control interface wiring diagrams submittals for the work of this Section.

4. Perform Level 1 commissioning activities specified in this Section, including installation verification, static tests, start-up, component tests, equipment tests, systems tests.

5. Operate equipment and systems during commissioning activities as required by the Testing and Commissioning Manager.

6. Perform and document commissioning tests to verify readiness for commissioning test demonstration. Commissioning tests are specified in this specification.

7. Correct issues and repeat commissioning tests when results do not meet acceptance criteria.

8. Commissioning Test Demonstrations: General requirements for commissioning test demonstrations are specified as part of general commissioning requirements as stated in the Contract Documents:

a. Repeat commissioning tests on a sample basis to demonstrate acceptable performance: Level 1 Component, Equipment, and System Commissioning Tests, and for Level 2 Intra-station system interface tests.

b. Record and submit commissioning test demonstration data and issues.

c. Correct issues and repeat commissioning test demonstration when results do not meet Acceptance Criteria.

9. Attend commissioning meetings as requested by the Testing and Commissioning Manager.

10. Report any inconsistencies or issues in system operations or performance.

11. Provide personnel to support commissioning test demonstration specified in this specification as requested by the Testing and Commissioning Manager.

12. In the event that a commissioning test demonstration fails, assist in determining the cause of failure. Make corrections as necessary.

B. Cooperate with Testing and Commissioning Manager to accomplish commissioning work on schedule and in coordination with other trades.

PART 2 - PRODUCTS

2.01 TEST EQUIPMENT

A. Provide test equipment and instrumentation, including consumable supplies, required to execute commissioning activities. Unless noted otherwise, test equipment and instrumentation remain the property of the Contractor.

B. Test weight for fall arrest equipment – 50 percent of maximum design load / anchor rated capacity.

C. Provide proprietary test instruments or tools required by the equipment manufacturer. Provide and operate the proprietary test instruments or tools as required for commissioning work.

PART 3 - EXECUTION

3.01 LEVEL 1 COMMISSIONING ACTIVITIES REQUIREMENTS

A. Level 1 commissioning activities scope: Technical requirements for commissioning of Equipment are specified in this specification.

B. Provide technicians, instrumentation, and tools to perform commissioning activities in accordance with accepted commissioning activity procedures at the direction of the Testing and Commissioning Manager.

C. Scope of Equipment commissioning activities applies to all portions of the Equipment installation described in the test. Where sampling is specified, it applies only to the commissioning test demonstration.

D. Upon approval of product submittals associated with Technical requirements and the scope of Commissioning develop and submit for approval Install Verification Checklist forms for the quality criteria of the Work specified in this specification.

E. Preparation:

1. Certify that Equipment, subsystems, and equipment have been completed, calibrated, and started; and are operating in accordance with Contract Documents.

2. Testing Instrumentation: Install measuring instruments and logging devices to record test data in accordance with accepted commissioning test procedures as directed by the Testing and Commissioning Manager and acceptable to Commissioning Authority.

3. Certify that Equipment instrumentation and control systems have been completed and calibrated; are operating according to the Contract Documents; and that pretest set points have been recorded.

4. Set systems, subsystems, and equipment into operating mode to be tested (e.g., normal shut down, normal auto position, normal manual position, unoccupied cycle, emergency power, and alarm conditions) in accordance with accepted

commissioning test procedures as directed by the Testing and Commissioning Manager.

F. Test all operating modes, interlocks, control responses, and responses to abnormal or emergency conditions, and verify proper response of building automation system controllers and sensors.

G. Perform tests using design conditions whenever possible. If tests cannot be completed because of a deficiency outside the scope of the Equipment system, document the deficiency and report it to Sound Transit. After deficiencies are resolved, reschedule tests.

H. Simulated conditions may need to be imposed using an artificial load when it is not practical to test under design conditions. Provide equipment to simulate loads. Set simulated conditions in accordance with accepted commissioning test procedures as directed by the Testing and Commissioning Manager. Document simulated conditions and methods of simulation. After tests, return settings to normal operating conditions.

I. Request approval to alter set points when simulating conditions is not practical. Request approval to alter sensor values with a signal generator when design or simulating conditions and altering set points are not practical.

J. If tests cannot be completed because of a deficiency outside the scope of the Equipment system, document the deficiency and report it to Sound Transit. After deficiencies are resolved, reschedule tests.

K. Where seasonal testing is specified, complete appropriate initial commissioning tests and documentation within the Construction Period. Schedule and execute seasonal tests when specified conditions are expected.

3.02 LEVEL 1 COMMISSIONING ACTIVITY PROCEDURES

A. Submit level 1 commissioning activity test procedures and data forms for the following types of commissioning activities, requirements for which are specified in this specification:

1. Level 1 commissioning activities:

a. Installation verification.

b. Start-up procedures.

c. Equipment tests.

d. System tests.

2. Example checklists/test forms can be provided upon request.

3.03 LEVEL 1 INSTALLATION VERIFICATION CHECKLIST REQUIREMENTS

A. Scope: Installation verification requirements apply to the following:

1. Roof safety anchors.

2. Fall-arresting systems.

3. [Designer: Review identified systems and add to list or modify as necessary based on location design for fall-arrest systems. Coordinate with Section 11 24 29 – Facility Fall Protection.].

4. [Designer: Review industrial equipment for maintenance facilities and include appropriate list of items].

B. Installation verification checklist forms shall include the following:

1. Organized to prompt the installer to check off quality criteria for each discrete portion of the Work.

2. Identify the system or features to which the installation verification checklist applies at the top of the form.

3. Section for verification of delivery of accepted materials.

4. Section for condition of materials at delivery.

5. Section for verification that installation meets contract documentation and any special installation instructions by respective manufacturer.

6. Space at the end of the form for the Quality Control inspector designated for the scope to review and accept installation verification. QC Inspector must perform Install Verification and verify each element identified in form has been reviewed for conformance with contract documents and in accordance with the Contractors Quality Control Inspection and Test Plan as part of Section 01 45 00 - Quality Assurance/Quality Control.

7. Space at the end of the form for the installer to print their name and company name, fill in the date, and sign or initial.

8. Space to identify the area of work for which the installer is executing the Installation Verification Checklist.

9. Description of the quality criteria as it pertains to the specific work. Include a check-box for each criterion.

10. Example checklists/test forms can be provided upon request.

C. Quality Criteria: Installation verification checklists shall address the following quality criteria:

1. Material, make and model match accepted submittals.

2. Equipment is installed without visible damage.

3. Location is as indicated on drawings.

4. Equipment is accessible for maintenance using safe work practices.

5. There is sufficient space to remove and replace components intact without demolishing other work.

6. Equipment surfaces are clean and free of dust, dirt, oil and other contaminants.

7. Roof safety anchors: Including visual inspections by the contractor in accordance with roof safety anchors field quality control requirements as stated in the Contract Documents.

8. Fall-arresting system: Including comparison with accepted mockups.

D. Fill out and sign installation verification checklists for Equipment while the Work is being installed. The intent is to fill out and sign the installation verification checklist as work proceeds to improve the quality of the installation. Retain completed installation verification checklists on site for review.

E. Before performing a commissioning test, installation verification checklists must be performed and completed by QC inspector designated for the appropriate area specified here in and within the Contractors Quality Control Inspection and Test Plan as part of Section 01 45 00 - Quality Assurance/Quality Control. Submit completed installation verification checklists for work included in the commissioning test.

3.04 LEVEL 1 INSTALLATION VERIFICATION

A. Installation verification checklists are required for the following, minimum:

1. 1108-IV-01 Roof Safety Anchors.

2. 1108-IV-02 Fall-Arresting Systems.

3. [*Designer: Review identified IV's, E and S tests and add or modify as necessary based on location design for fall-arrest systems. Coordinate with Section 11 24 29 - Facility Fall Protection].*

4. [Designer: Review industrial equipment for maintenance facilities and include appropriate list of items].

3.05 LEVEL 1 EQUIPMENT TESTS

A. 1108-E-01: Roof Safety Anchors:

1. System/Equipment to be Tested:

a. Roof safety anchors, including attachment to structure.

2. Functions to be Tested: [Perform the following inspections and tests in accordance with roof safety anchors field quality control requirements as stated in the Contract Documents.

a. Nondestructive Testing.

b. Magnetic Particle Inspection.

c. Liquid Penetrant Inspection.

3. Conditions of the Test:

a. Nondestructive Testing: AWS B1.10M/B1.10.

b. Magnetic Particle Inspection: ASTM E709.

c. Liquid Penetrant Inspection: ASTM E165/E165M.]

[*Designer: Coordinate testing requirements with anchor attachment basis of design and adjust testing references and requirements appropriately]*

4. Acceptable Results:

a. As specified by the listed standards.

3.06 LEVEL 1 SYSTEM TEST (NOT USED)

A. 1108-S-01: Fall-arresting Systems:

1. System/Equipment to be Tested:

a. Fall-arresting systems, including attachment to structure.

2. Functions to be Tested: Perform the following inspections and tests in accordance with fall-arresting systems testing requirements as stated in the Contract Documents:

   a. Load performance.

3. Conditions of the Test:

   a. Load cell tests in accordance with manufacturer's recommendations. Submitted procedure shall identify recommended steps or attach manufacturer's procedures.

4. Acceptable Results:

   a. As specified in accordance with manufacturer's recommendations. Submitted procedure shall identify recommended pass/fail criteria.

3.07 LEVEL 1 TEST REQUIREMENTS MATRIX

	1108-IV-0X	**1108-E-0X**	**1108-S-01**
Roof Safety Anchors	X	X	
Fall-Arresting Systems	X		X

[DESIGNER: ADD OR MODIFY MATRIX AS NECESSARY BASED ON TESTS ADDED OR MODIFIED ABOVE DEPENDING UPON THE LOCATION DESIGN FOR FALL-ARREST SYSTEMS. COORDINATE WITH SECTION 11 24 29]

[DESIGNER: ADD OR MODIFY MATRIX AS NECESSARY BASED ON TESTS ADDED OR MODIFIED ABOVE DEPENDING UPON THE LOCATION DESIGN FOR INDUSTRIAL EQUIPMENT ASSOCIATED WITH A MAINTENANCE FACILITY]

END OF SECTION

EXHIBITS (On Proceeding Pages)

1. EXHIBIT A – Sample Test Form

EXHIBIT A: SAMPLE TEST FORM

☐ First Test ☐ PASS Test Date: _____
☐ Repeat Test ☐ FAIL
☐ Demonstrated Test

OBJECTIVES:

A. Verify that the fall arrest anchors are installed per code, design documents, and special inspector's requirements for welding to building structure.

EQUIPMENT TO BE TESTED:

Equipment ID	Description
N/A	Fall arrest anchors

REFERENCE DOCUMENTS:

Document
Drawings:
Specification Sections:
Submittals:

TEST PRE-REQUISITES:

Activity	Notes	Completed?	
		Yes	No
None		☐	☐
Notes: (1)			

MINIMUM PARTICIPANTS:

Participant	Notes	Required?	
		Yes	No
Installing contractor		☒	☐
3rd-Party load cell testing company		☐	☐
Sound Transit site quality inspector		☒	☐
Notes: (1)			

REQUIRED INSTRUMENTATION AND EQUIPMENT:

Instrument or Equipment						Notes	Provided Instrumentation meets Requirements?	
Type or Sensed Parameter	Manufacturer	Model	Range	Accuracy	Calibration Date/ Next Cal. Due		Yes	No
None				±	/		☐	☐
							☐	☐
Notes: (1)								

CONDITIONS AT TIME OF TESTING:

AREA OF WORK:

Area in Which Work will be Conducted:
Parking garage.
Notes: (1)

ISSUES DISCOVERED AND PROPOSED RESOLUTIONS:

No.	Issue	Proposed Resolution
Notes: (1)		

SIGNATURES:

Company	Printed Name	Signature	Date
Installing Contractor:			
Other Witness:			
Other Witness:			
Notes: (1)			

INSTALLATION VERIFICATION CHECKLIST - GENERAL:

Equipment ID	Conditions of materials at time of delivery is acceptable:	The make and model of the materials and/or equipment matches the product submittals:	The installed materials and/or equipment does not have visible damage, including finishes:	The equipment and/or distribution materials matches the locations shown on the design dwgs:	The equipment and/or distribution materials matches the locations shown on the as-built dwgs:	The manufacturer's recommended and required maintenance clearances are maintained:	Notes	Pass?		Date
								Yes	No	
Garage North Tower Roof Anchors										
East Abutment Roof Anchors										
Garage South Tower Roof Anchors										

Notes:

(1)

INSTALLATION VERIFICATION CHECKLIST

No.	Checklist Item	Notes	Pass?		Date
			Yes	No	
	STRUCTURAL SPECIAL INSPECTIONS				
1.1	Attach the Structural Special Inspector's visual field weld inspection report, associated with the roof anchors, to the back of this form. Verify that there are no adverse observations within the report.				
1.2	Also attach weld work reports for each location, when available.				

Notes:

(1)

END OF EXHIBITS

SECTION 11 24 29

FACILITY FALL PROTECTION

PART 1 - GENERAL

1.01 SUMMARY

A. Section includes:

1. Requirements and specifications for design and installation of the following fall protection systems:

a. Horizontal lifeline fall-arresting cable systems (HLL), including the designing, furnishing, and installing of complete systems, as defined by WAC 296-880, for safe maintenance and access.

a. Horizontal fall protection rail systems, including attachment carriage, attachment plates, joints, corners, system stops, rail, carriage stops and specialty components for exposed and concealed conditions.

b. Wall mounted anchors.

c. Removable concrete detent anchors.

b. Ladder tie off systems.

c. Roof mounted anchor posts.

d. Delegated design and engineering for complete facility fall protection system.

1.02 REFERENCES

A. This Section incorporates by reference the latest revisions of the following documents:

1. Code of Federal Regulations:

a. 29 CFR 1910 - Occupational Safety and Health Standards.

b. 29 CFR 1910.23 – Ladders.

c. 29 CFR 1910.27 - Scaffolds ad Rope Descent Systems.

d. 29 CFR 1910.28 - Duty to have Fall Protection and Falling Object Protection.

e. 29 CFR 1910.29 - Fall Protection Systems and Falling Object Protection - Criteria and Practices.

f. 29 CFR 1910.140 - Personal fall protection systems.

g. 29 CFR 1910.66 - Powered Platforms for Building Maintenance.

h. 29 CFR 1926 - Safety and Health Regulations for Construction.

i. 29 CFR 1926.502 - Fall Protection Systems Criteria and Practices.

j. 29 CFR 1926.1053 – Ladders.

2. American Institute of Steel Construction (AISC):

a. AISC S342L, with Supplement No.1 "Load and Resistance Factor Design Specification for Structural Steel Buildings".

3. American Welding Society (AWS):

a. AWS D1.1 Structural Welding Code – Steel.

b. AWS D1.2 Structural Welding Code – Aluminum.

c. AWS D1.6/D1.6M - Structural Welding Code - Stainless Steel.

d. AWS A2.4 Standard Symbols for Welding, Brazing, Nondestructive Examination.

e. AWS B1.10M/ B1.10 - Guide for the Non-Destructive Examination of Welds.

4. American National Standards Institute (ANSI):

a. ANSI/IWCA I-14 Window Cleaning Safety Standard (International Window Cleaning Association).

b. ANSI/ASSP Z359.1 – The Fall Protection Code.

c. ANSI/ASSP Z359.6 - Specifications and Design Requirements for Active Fall Protection Systems.

d. ANSI/ASSP Z359.7 - Qualification and Verification Testing of Fall Protection Products.

e. ANSI/ASSP Z359.11 - Safety Requirements for Full Body Harnesses.

f. ANSI/ASSP Z359.12 - Connecting Components for Personal Fall Arrest Systems.

g. ANSI/ASSP Z359.15 - Safety Requirements for Single Anchor Lifelines and Fall Arresters for Personal Fall Arrest Systems.

h. ANSI/ASSP Z359.16 - Safety Requirements for Climbing Ladder Fall Arrest System.

i. ANSI/ASSP Z359.18 - Safety Requirements for Anchorage Connectors for Active Fall Protection Systems.

5. American Society for Testing and Materials International (ASTM):

a. ASTM A666 - Standard Specification for Annealed or Cold-Worked Austenitic Stainless-Steel Sheet, Strip, Plate, and Flat Bar.

b. ASTM D1056 - Standard Specification for Flexible Cellular Materials - Sponge or Expanded Rubber.

c. ASTM D2000 - Standard Classification System for Rubber Products in Automotive Applications.

d. ASTM F594 - Standard Specification for Stainless Steel Nuts.

6. Occupational Safety and Health Administration (OSHA):

   a. OSHA 1926.502 - Fall Prevention Systems and Criteria and Practices.

7. Washington Administrative Code (WAC):

   a. WAC 296-876-50010 – Design and Construction – Fixed ladders installed on or after December 1, 2006 (ANSI A14.3).

   b. WAC 296-880 - Unified Safety Standards for Fall Protection.

   c. WAC 296-878 - Safety Standards for Window Cleaning.

B. Definitions:

1. Anchorage: A secure connecting point or a terminating component of a fall protection system or rescue system capable of safely supporting the impact forces applied by a fall protection system or anchorage subsystem.

2. Anchorage Connector: A component or subsystem that functions as an interface between the anchorage and a fall protection, work positioning, rope access, or rescue system for the purpose of coupling the system to the anchorage.

3. Fall Arrest System: A system designed to stop you in the process of a fall, typically including an anchor point or series of anchor points, a safety lanyard or self-retracting lifeline, and a harness.

4. Fall Restraint System: A system designed to keep you from getting close enough to the fall hazard to fall, typically including an anchor point or series of anchor points, a safety lanyard or self-retracting lifeline, and a harness.

5. Fall Protection System: System can be either a fall arrest or a fall restraint system.

6. Lifeline: A component of a fall protection system consisting of a flexible line designed to hang vertically, a vertical lifeline, or connecting to anchorages or anchorage connectors at both ends to span horizontally, a horizontal lifeline.

1.03 SUBMITTALS

A. Submit: Detailed shop drawings showing design and fabrication for complete fall protection systems, signed and sealed by the qualified professional engineer responsible for their preparation licensed to practice in the state of Washington:

1. Include dimensioned layout drawings of a fully designed and fully complete layout of each system and anchor in relation to the supporting structure indicating the locations of all components in the system properly labeled for identification. Show adjacent conditions and illustrate access to architectural, structural, mechanical, electrical, fire, and plumbing elements.

2. Include detailed structural drawings of all anchor connections.

3. Indicate the intended access points for the various fall protection systems.

4. Installation and rigging instructions and all necessary Restrictive and Non-Restrictive Working Usage Notes and General Safety Notes, such as fall arrest of restraint, the number of permitted users.

5. Indicate welds, both shop and field, using standard welding symbols of AWS A2.4. Show the size, length, and type of each weld on drawings. Indicate all mechanical

connections with type and material of fasteners and type of galvanic separation. Include all ICC-ES reports for all fasteners.

B. Submit: Analysis data and calculations signed and sealed by the qualified professional engineer responsible for their preparation licensed to practice in the State of Washington for review by structural engineer, for loads imposed and attachment to structure.

C. Submit: Certified test reports indicating load capacity (static and dynamic) of roof anchors and suspension assemblies.

D. Submit: In addition to the requirements stated elsewhere in the Contract Documents, the Operation and Maintenance Manual shall include the following:

1. Maintenance Procedures: Including maintenance requirements for all equipment. Language requiring periodic inspection, testing or certification by a specific entity is not acceptable.

2. Operations Procedures: Indicating proper use of equipment for safe operation of the system.

3. Parts List: Include all components, listed by system. Include respective serial numbers for each component. If systems are provided at multiple locations or facilities, identify the location where individual components are located.

4. Test Certificate: Indicating completion of proof load testing on installed systems. Include copies of approved system calculations.

5. Product certificate: containing the manufacturer’s serial number, name and part number of each individual component used in the system; manufacturer’s catalog data indicating the sizes, descriptions, capacities, test certifications for qualifications and verifications testing, and other descriptive data showing sufficient detail that the product complies with the contract requirements.

6. Inspection Log Book: Include blank inspection sign-off forms in the Operation and Maintenance Manual. In addition, submit one copy of a complete Inspection Log Book with the "Initial Inspection - Certification for Use" and "Inspection Sign-Off" forms completed.

2. As-Built Drawings and calculations: A copy of as-built drawings, shop drawings, and calculations shall be included in the Operation and Maintenance Manual. As-built drawings shall include layout drawings of each system and anchor in relation to the supporting structure indicating the locations of all components in the system properly labeled for identification. Include structural detail drawings showing all anchor connections. Indicate individual welders' identification on Contract record drawing.

7. Calculations and analysis of anchor strengths, system loads, and maximum fall distance/clearance requirements for future certification reference.

8. Product Data: Material, equipment, and fixture lists. Manufacturer’s catalog data indicating the sizes, descriptions, capacities, test certifications, and other descriptive data showing in sufficient detail that the product complies with the contract requirements. Equipment and performance data including but not limited to lifeline anchors, safety tieback anchors, energy-absorbing devices, body harnesses, lifeline cable.

9. Posted Drawings:, Mount a plastic laminated copy of the as-built shop drawing showing equipment locations and details, and manufacturer’s directions for use, near each exit onto the roof.

E. Transmit: Manufacturer's Instructions: Manufacturer's instructions indicating the manufacturer's recommended method and sequence of installation for the following: lifeline anchors, safety tieback anchors, energy-absorbing devices, body harnesses, and lifeline cable.

F. Transmit: Evidence of Liability Insurance: Provide written documentation in evidence and demonstration of fulfillment of requirements of Article 1.04 C, herein below.

1.04 QUALITY ASSURANCE

A. Manufacturer: specializing in the design, fabrication and installation of fall-arresting lifeline and safety tieback anchor systems having a minimum of 5 years documented experience.

B. Loading and safety assurance: meet the requirements of governing codes and jurisdiction and comply with properly engineered loading and safety criteria for the intended use.

C. Insurance: Manufacturer shall carry specific liability insurance (products and completed operations) in the amount of $2,000,000.00 to protect against product/system failure.

D. Welding: executed by certified welders in accordance with AWS requirements.

E. Engineering Responsibility: Preparation of Shop Drawings, design calculations, and other structural data by a professional engineer registered to practice in the State of Washington with at least ten (10) years of structural design experience who is Qualified under WAC and ANSI Z359 requirements to design fall protection systems:

1. Fall-Arresting System Pre-Approval: Obtain approval of Authority Having Jurisdiction before proceeding.

2. Mock-Up Requirement:

a. Provide mock-up of each type of anchor, tie-back, safety anchor or suspension system to the Resident Engineer for approval.

b. If accepted, mock-up shall represent minimum standard for the Work of this Section.

c. If accepted, mock-up may remain as part of the Work. Remove and replace mock-ups that are not accepted.

1.05 REGULATORY REQUIREMENTS

A. Comply with the following WAC, OSHA and ANSI regulations:

1. WAC 296-880.

2. WAC 296-878.

3. ANSI Z359.1.

4. 29 CFR 1910, Subpart D (Walking and Working Surfaces).

5. Appendix C to 29 CFR 1910 Subpart F (Personal Fall Arrest Systems).

6. "OSHA Ruling on Window Cleaning by Bosun's Chair" Memorandum to Regional Administrators from P. K. Clark, Director, Directorate of Compliance Programs.

7. OSHA 1926.502 Fall Prevention Systems and Criteria and Practices.

1.06 DELIVERY, STORAGE, AND HANDLING

A. Deliver materials in manufacturer's original unopened packaging. Store materials in original protective packaging inside a well-ventilated area protected from weather, moisture, soiling, abrasion, extreme temperatures, and humidity.

1.07 PROJECT CONDITIONS

A. Field Measurements: Verify actual locations of structural framing and other construction contiguous with lifeline and safety tieback anchor system and window-washing suspension anchor system equipment by field measurements before fabrication and indicate measurements on Shop Drawings.

1.08 WARRANTY

A. Extended Correction Period: Correct defective work within a 2-year period commencing on the Date of Substantial Completion.

PART 2 - PRODUCTS

2.01 PERFORMANCE REQUIREMENTS

A. Design fall-arresting lifeline and safety tieback anchor system that will allow the user to walk uninterrupted the entire length of the system and provide secure anchorage to arrest a fall by the users in accordance with standards and regulations/codes. Design system to fully protect the user at all times while in the area of potential fall hazard. Design lifeline system for two simultaneous users. Use safety tieback and suspension anchors that are rated for attachment of a single user. Include all components required to provide a complete and fully operational system.

B. Structural Performance: Provide fall-arresting lifeline and safety tieback anchor system capable of withstanding design loads as required by governing regulations and codes. Where component design loads are specified herein, they represent design minimum requirements. Design the fall arresting lifeline and safety tieback anchor system and window-washing suspension anchor system as specified herein, and all associated connections to conform to the conditions shown on the Issued for Construction Drawings. Ensure that all anchor components conform to proper engineering principles and have been designed by a professional engineer who is legally qualified and registered to practice in the State of Washington where Contract is located and who is experienced in the design of fall arresting and anchoring systems, its application and safety requirements. Sound Transit takes no responsibility for product design, manufacture, delivery and handling, or connection to basic structure. Furnish and install all necessary bracing, ties, anchorage, distribution members, and similar elements in conformance with submitted drawings and calculations.

C. The Engineer retained by the Contractor shall be responsible for verifying that system components are attached in such a manner that their forces cause no distress to the basic structure. The engineer must verify the structural adequacy of the existing structural system under the additional load from the fall protection in accordance with applicable codes. Where necessary, provide additional structural elements to safely distribute forces.

1. Provide submittal to Structural Engineer of record retained by the Contractor for review during submittal process and prior to installation.

2. The installation must not be performed until the submittal is approved by the Resident Engineer.

D. Locate anchorages to suit suspension equipment used on the building with respect to items such as reach, rigging, spacing, roof edge condition, and similar items, including full access to roof mounted equipment.

E. Design all anchor components to provide adequate attachment to the building and suited to current suspended maintenance practices. Ensure compatibility with industry standard equipment. Attachment of anchor post to be mechanically fastened and not welded to building structure.

F. Design system fall-arresting lifeline and safety tieback anchor system and window-washing suspension anchor system to comply with the following structural requirements without damage to underlying structure, detachment, or fracture of anchor assembly:

1. Safety Tieback Anchors: designed to allow the user to connect personal fall arrest equipment and designed with a minimum 2:1 factor of safety and withstand a force of 5000 lbs.

2. Horizontal fall protection rail system designed to allow the user to connect personal fall arrest equipment and designed with a minimum 2:1 factor of safety and to withstand a force of 5000 lbs.

G. Coordinate ladder tie-off and anchor locations such that the worker can connect to the initial anchor or lifeline from the ladder.

H. Other than during suspended work, the worker must be able to navigate the entire fall protection system without switching from one lanyard type to another and without completely disconnecting from protection.

2.02 MANUFACTURERS

A. Accepted Fall-Arresting System Suppliers:

1. Spider Staging Co.

2. Flexible Lifeline Systfems Co.

3. Gravitec Systems, Inc.

4. DBI-SALA.

5. Rooftop Anchor, Inc.

6. UniRail by Uline.

2.03 HORIZONTAL LIFE-LINE FALL RESTRAINT SYSTEM (HLL)

A. Intermediate cable attachment bracket.

B. Marine grade, 8mm stainless steel cable.

C. Lifeline systems connectors, cables and bolts: manufactured from stainless steel: ASTM A666, Type 316. Connectors: OSHA regulation 1926.502.

D. Components:

1. Tension Indicators and Turn-Buckles:

a. Include pretension indicator to verify and adjust correct tension of the lifeline cable.

b. Calculate cable tensions with minimum breaking strength exceeding 8,000 pounds and in conformance to manufacturer's instructions.

2. D-Rings:

a. Exceed minimum breaking strength of 10,000 pounds.

b. Fasten to supporting structure in accordance with the drawing requirements.

c. Include a lock washer under turned elements.

3. In-Line Shock Absorbers:

a. Utilize to dissipate energy generated in a fall and to reduce the end anchorage forces.

b. Exceed minimum breaking strength of 8,000 pounds.

c. Exceed 180-pound allowable normal preset tension.

d. Do not exceed activation threshold of 440 pounds.

e. Shock absorbers shall visually display deployment in the event a load such as a fall has occurred on the system.

4. Cable:

a. 7 X 7 wire rope construction.

b. 5/16-inch (8mm) diameter.

c. Minimum breaking strength of 8,000 lbs.

d. Do not exceed weight of 0.18 pounds/foot.

e. Terminate cable ends with swaged fittings.

5. Intermediate Supports: Design to ensure passage of the pass-through trolley over intermediate anchorage points/posts without being released from the system lifeline.

6. D-ring Storage Cabinet:

a. Wall hanging stainless steel box painted:

1) Exterior of cabinet door: provide signage identifying contents.

2) Interior face of cabinet door: attach instruction for the use of D-rings.

b. Capacity: Provide for each removable D-ring anchor and each removable lifting ring at each location:

1) Include removable flush plug device for each removable anchor, plus 10 percent spares.

c. Finish: As selected by Resident Engineer.

d. Location: As noted on Drawings.

7. Attachment Transfastener/Trolley: Manufacturer's standard stainless steel attachment trolley. Trolley shall allow for easy pass-through of support points without disconnecting from the system:

   a. Minimum tensile strength 3600 lbs.

   b. Provide 4 carriages per system type at each facility.

2.04 HORIZONTAL FALL PROTECTION RAIL SYSTEMS

A. Basis of design: 3M Fall Protection; DBI-SALA® Roofsafe™ Rail System.

B. Components:

1. Rail: Low profile 1-1/4 -inches by 1-1/4-inches aluminum extrusions.

2. Rail Joint: Low profile, aluminum extrusion to connect to rail sections.

3. Corners: Additional bends and forms available to a radius of 7-7/8- inches.

4. System Stops: Manufacturer's standard stops which prevent rails from coming out of end anchorage bracket.

5. Molded Ends: Manufacturer's standard molded ends which protect exposed edge of end rails.

6. Tamper-Proof Carriage Stops: Manufacturer's standard tamper-proof, carriage stops which prevent carriages from coming off the end of the system.

7. Removable Carriage Stops: Manufacturer's standard tamper-proof, carriage stops which prevent carriages from coming off the end of the system but can be removed to allow the carriages to be taken off.

8. Attachment Carriages: Manufacturer's standard aluminum attachment carriage with aluminum, nylon coated wheels. A stainless-steel shackle with carabiner hook which pivots for any angle connection:

   a. Minimum tensile strength 3370 lbs.

   b. Provide 4 carriages per rail length.

2.05 WALL-MOUNTED ANCHORS

A. Manufacturers:

1. Basis of design: Protecta AN111A.

2. 3M Fall Protection.

3. Miller Fall Protection.

B. Component:

1. Stainless steel D-bolt anchor up to 4-inches working thickness, with 5/8-inch diameter bolt with lock washer and nut.

2. Capacity: Each anchorage connector to support 5,000 pounds per worker and shall be designed for fall arrest.

2.06 REMOVABLE CONCRETE DETENT ANCHORS

A. Basis of design:

1. DBI-Sala Concrete Detent Anchor with removable D-ring.

2. Guardian Fall Protection.

B. Component:

1. Concrete detent anchor for hole with reusable detent pin D-ring assembly, socket and cap.

2. Capacity: Each anchorage connector to support a load of 5,000 lbs.

2.07 LADDER TIE-OFF SYSTEM

A. Component:

1. Premanufactured anchor product or custom fabricated steel shape as indicated on Issued for Construction Drawings.

2. Capacity: Each tie-off connector to support a load of 1,800 lbs or applicable codes, whichever is more stringent.

3. Dimensions: To accommodate minimum width for ladder as defined by WAC 296-880.

2.08 ROOF MOUNTED ANCHOR POSTS

A. Component:

1. Roof anchorage points for personal fall protection systems; used exclusively for employee fall protection and independent of any anchorage used to suspend employees or platforms on which employees work:

a. Anchor Type per ANSI/ASSP Z359.18: Type T.

2. Roof anchorage points for primary suspension lines for bosun's chairs used for window washing or facade access.

B. Structural Performance: Provide safety tieback anchors capable of withstanding design loads as required by governing regulations and codes.

2.09 FASTENERS

A. Bolts, Nuts, and Washers: Type 304 or 316, stainless steel:

1. Bolts and Washers: ASTM F593.

2. Nuts: ASTM F594.

B. Exposed Fasteners: As designed by manufacturer to accommodate deck type, structural framing, and design loads.

2.10 FLASHING AND SEALING MATERIALS

A. Non-Expanding Sealing Gaskets: Pre-cut and predrilled, 40 durometer, 1/8-inch, solid neoprene rubber meeting or exceeding ASTM D2000. For sealing under anchor bases.

B. Expanding Compression Gaskets: EPDM or Neoprene rubber meeting or exceeding ASTM D1056 Type I (Closed Cell), Class B or C (Petroleum Resistant).

C. Joint Sealants: Non-skinning butyl sealant or neutral curing silicone sealant as specified in Section 07 92 00 - Joint Sealants. Polyurethane sealant not accepted.

2.11 FABRICATION

A. Fabricate work true to dimension, square, plumb, level and free from distortion or defects detrimental to appearance and performance.

B. Grind off surplus welding material and ensure exposed internal corners have smooth lines.

C. Fabricate system components of the same material unless otherwise indicated.

D. Fabricate anchoring devices as recommended by the manufacturer to provide adequate support for intended use.

E. Fabricate joints in a manner to discourage water accumulation. Provide weep holes to drain all water that could accumulate in the exposed joints.

PART 3 - EXECUTION

3.01 EXAMINATION

A. Examine substrates and conditions for compliance with requirements for installation tolerances and other conditions upon which the work of this Section depends. Report to the Contractor in writing defects in work prepared by other trades and other unsatisfactory site conditions that would cause defective installation of products or cause latent defects in workmanship and function.

1. Proceed with installation only after unsatisfactory conditions have been corrected.

2. Commencement of work shall imply acceptance of prepared work.

3.02 INSTALLATION, GENERAL

A. Install equipment in accordance with approved shop drawings and manufacturer's instructions.

B. Coordinate installation with work of related trades.

C. Install all work true, level, tightly fitted, and flush with adjacent surfaces as required.

D. Deform threads of tail end of anchor studs after nuts have been tightened to prevent accidental removal or vandalism.

E. Lifeline systems and anchors: installed by manufacturer’s authorized, trained, and certified personnel.

F. For requirements for anchors in concrete refer to anchorage to concrete as stated elsewhere in the Contract documents. For other building attachment locations install with mechanical fasteners only.

G. Install anchorage and fasteners in accordance with manufacturer’s recommendations to obtain the allowable working loads published in the product literature and in accordance with these Contract Specifications.

H. Do not load or stress lifeline systems or anchors until all materials and fasteners are properly installed and ready for service.

I. Install all lifeline systems and anchors a minimum of 6 feet from the roof edge, unless noted otherwise on Drawings.

3.03 FIELD ADJUSTING AND INSPECTION

A. Adjust and leave equipment in proper working order.

B. Inspect and test field welds in accordance with AWS B1.10M/ B1.10

3.04 TESTING

A. Test using load cell test apparatus in accordance with manufacturer's recommendations.

1. If no test procedure or pass/fail thresholds are specified by the manufacturer, test in accordance with ANSI Z359.7 - Qualification and Verification Testing of Fall Protection Products.

3.05 CLEANING

A. Unless otherwise indicated, clean metals by washing thoroughly with clean water and soap, rinsing with clean water, and drying with soft cloths.

3.06 TRAINING

A. Provide a minimum of 4 hours of operator training specific to the installed system after system has been installed and proof tested. Provide hands-on training for the users of the system and conduct at the installation site.

3.07 PROTECTION

A. Protect roof mounted horizontal maintenance equipment and accessories from damage during construction period with temporary protective coverings approved by manufacturer. Remove protective covering at time of Substantial Completion.

B. Restore finishes damaged during installation and construction period so no evidence remains of damaged work. Return items that cannot be refinished in the field to the shop; make required alterations and refinish entire unit or provide new units.

3.08 COMMISSIONING

A. Systems in this section will be required to be commissioned per the requirements of Section 01 91 13 – General Commissioning Requirements and Section 11 08 00 – Commissioning of Equipment.

B. Unless specified elsewhere, the sampling rate for commissioning equipment in this section shall be 100 percent.

C. The contractor will be responsible for providing labor and testing equipment to support the commissioning process for this equipment.

END OF SECTION

SECTION 14 08 00

COMMISSIONING OF CONVEYING EQUIPMENT

NOTE TO DESIGNER:

SECTIONS WITH BRACKETS. E.G., [TEXT] ARE TO BE MODIFIED OR DELETED IF NOT APPLICABLE. ITALICIZED TEXT PROVIDES INSTRUCTION TO THE DESIGNER TO INCLUDE LANGUAGE ON SPECIFIC TOPICS WHEN APPLICABLE. THE INSTRUCTIONS ARE TO BE DELETED WHEN THE SPECIFICATION IS FINALIZED. LANGUAGE NOT IN BRACKETS IS TO BE USED 'AS IS' WITHOUT MODIFICATION OR WITH AN APPROVED SPECIFICATION MODIFICATION REQUEST.

DESIGNER TO DELETE TEXT ABOVE FOR FINAL SECTION

PART 1 - GENERAL

1.01 SUMMARY

A. Section Includes:

1. Requirements for commissioning process requirements for Conveying Equipment:

a. Level 1 commissioning activities for Conveying Equipment.

b. Level 2 commissioning activities for Conveying Equipment.

c. Support for Level 3 commissioning activities related to Conveying Equipment.

d. Support for Level 4 commissioning activities related to Conveying Equipment.

1.02 REFERENCES

A. This Section incorporates by reference the latest revisions of the following documents:

1. American Society of Mechanical Engineers (ASME):

a. ASME A17.2 Guide for Inspection of Elevators, Escalators, and Moving Walks – Includes Inspection Procedures for Electric Traction and Winding Drum Elevators, Hydraulic Elevators, Inclined Elevators, Private Resident Elevators, and Escalators and Moving Walks.

2. Washington Administrative Code (WAC).

B. Definitions:

1. See general commissioning requirements as stated in the Contract Documents for commissioning definitions.

2. Systems, Equipment, and Components: Where these terms are used together or separately, they shall mean "as-built" systems, equipment, and components.

1.03 COORDINATION

A. See general commissioning requirements as stated in the Contract Documents for general coordination requirements related to commissioning.

1.04 COMMISSIONING ACTIVITIES

A. Furnish labor and material to accomplish building commissioning as stated in the Contract Documents, and in this specification, including, but not limited to:

1. Provide to the Testing and Commissioning Manager Preliminary Operation and Maintenance information for use in developing commissioning test procedures.

2. Assist the Testing and Commissioning Manager in developing commissioning activity procedures and data forms submittals for work specified in this Section.

3. Provide information to the Testing and Commissioning Manager needed for Control Interface Wiring Diagrams for the work of this Section.

4. Perform Level 1 and Level 2 commissioning activities specified in this Section, including installation verification, static tests, start-up tests, component tests, systems tests.

5. The person or firm installing the equipment shall provide a written checkout procedure and demonstrate that all E/E/PES electrical protective devices operate as intended.

6. Operate equipment and system during Commissioning Tests and Commissioning Test Demonstration specified in this specification.

7. Perform and document Commissioning Tests to verify readiness for Commissioning Test Demonstration. Commissioning Tests are specified in this specification.

8. Correct issues and repeat Commissioning Tests when results do not meet Acceptance Criteria.

9. Commissioning Test Demonstrations: General requirements for commissioning test demonstrations are specified in general commissioning requirements as stated in the Contract Documents.

a. Repeat commissioning tests on a sample basis to demonstrate acceptable performance: Level 1 Component, Equipment, and System Commissioning Tests.

b. Record and submit for approval commissioning test demonstration data and issues.

c. Correct issues and repeat commissioning test demonstration when results do not meet Acceptance Criteria.

10. Attend commissioning meetings as requested by the Testing and Commissioning Manager before and during testing specified in this specification.

11. Report any inconsistencies or issues in system operations or performance.

12. Provide personnel to support Commissioning Test Verification specified in this specification as requested by the Testing and Commissioning Manager.

13. In the event that a Commissioning Test Demonstration fails, assist in determining the cause of failure. Make corrections as necessary.

B. Cooperate with Testing and Commissioning Manager to accomplish commissioning work on schedule and in coordination with other trades.

1.05 QUALITY ASSURANCE

A. Coordinate completion of Install Verification forms, by the Quality Control Inspector, as identified in the Contractors Quality Control Inspection and Test Plan

PART 2 - PRODUCTS

2.01 TEST EQUIPMENT

A. Provide test equipment and instrumentation, including consumable supplies, required to execute commissioning activities. Unless noted otherwise, test equipment and instrumentation remain the property of the Contractor.

B. Provide proprietary test instruments or tools required by the equipment manufacturer. Provide and operate the proprietary test instruments or tools as required for commissioning work.

PART 3 - EXECUTION

3.01 LEVEL 1 COMMISSIONING ACTIVITIES REQUIREMENTS

A. Level 1 commissioning activities scope: Technical requirements for commissioning of Equipment are specified in this specification.

B. Provide technicians, instrumentation, and tools to perform commissioning activities in accordance with accepted commissioning activity procedures at the direction of the Testing and Commissioning Manager.

C. Scope of Equipment commissioning activities applies to all portions of the installation described in the test. Where sampling is specified, it applies only to the commissioning test demonstration.

D. Upon approval of product submittals associated with Technical requirements and the scope of Commissioning develop and submit for approval Install Verification Checklist forms for the quality criteria of the Work specified in this specification.

E. Preparation:

1. Certify that Equipment, subsystems, and equipment have been completed, calibrated, and started; and are operating in accordance with Contract Documents.

2. Testing Instrumentation: Install measuring instruments and logging devices to record test data in accordance with accepted commissioning test procedures as directed by the Commissioning Authority.

3. Certify that Equipment instrumentation and control systems have been completed and calibrated; are operating according to the Contract Documents; and that pretest set points have been recorded.

4. Set systems, subsystems, and equipment into operating mode to be tested (e.g., normal shut down, normal auto position, normal manual position, unoccupied

cycle, emergency power, and alarm conditions) in accordance with accepted commissioning test procedures as directed by the Testing and Commissioning Manager.

F. Test all operating modes, interlocks, control responses, and responses to abnormal or emergency conditions, and verify proper response of building automation system controllers and sensors.

G. Perform tests using design conditions whenever possible. If tests cannot be completed because of a deficiency outside the scope of the Equipment system, document the deficiency and report it to Sound Transit. After deficiencies are resolved, reschedule tests.

H. Simulated conditions may need to be imposed using an artificial load when it is not practical to test under design conditions. Provide equipment to simulate loads. Set simulated conditions in accordance with accepted commissioning test procedures as directed by the Testing and Commissioning Manager. Document simulated conditions and methods of simulation. After tests, return settings to normal operating conditions.

I. Request approval to alter set points when simulating conditions is not practical. Request approval to alter sensor values with a signal generator when design or simulating conditions and altering set points are not practical.

J. If tests cannot be completed because of a deficiency outside the scope of the Equipment system, document the deficiency and report it to Sound Transit. After deficiencies are resolved, reschedule tests.

K. Where seasonal testing is specified, complete appropriate initial commissioning tests and documentation within the Construction Period. Schedule and execute seasonal tests when specified conditions are expected.

3.02 LEVEL 1 AND LEVEL 2 COMMISSIONING ACTIVITY PROCEDURES

A. Submit Level 1 commissioning activity test procedures and data forms for the following types of commissioning activities, requirements for which are specified in this specification:

1. Level 1 commissioning activities:

a. Installation verification.

b. Start-up.

c. System tests.

2. Level 2 commissioning activities:

a. Intra-station system interface tests.

b. [Review identified systems and add to list or modify as necessary based on location design for conveying equipment. Coordinate with Division 14].

3. Example checklists/test forms can be provided upon request.

3.03 LEVEL 1 INSTALLATION VERIFICATION CHECKLIST REQUIREMENTS

A. Scope: Installation verification requirements to the following:

1. [1408-IV-01: Electric Traction Elevators or Hydraulic Elevators].

a. Hoistway, pit, hoistway equipment.

b. Elevator machine room and equipment, including all cable and wire installation and termination.

c. Elevator cab, doors and landing equipment.

d. Complete and provide to owner Alignment Forms included in Appendix:

1) A – Shaft Inspection Verification Form.

2) B - Rail Holdpoint Inspection.

2. 1408-IV-02: Escalators:

a. Escalator wellway, pit and equipment.

b. Escalator machine room and equipment, including all cable and wire installation and termination.

c. Compete and provide to owner Alignment Forms included in Appendix:

1) C - Escalator Truss Bolt Inspection.

2) D - Escalator Center-Line Inspection.

3. [Designer: Adjust IV to reflect Traction or Hydraulic, if location has both add a unique IV and adjust IV numbering. Organize and adjust appendices to reflect equipment to be installed].

B. Installation Verification Checklist forms shall include the following:

1. Organized to prompt the installer to check off quality criteria for each discrete portion of the Work.

2. Identify the system or features to which the Installation Verification Checklist applies at the top of the form.

3. Section for verification of delivery of approved materials.

4. Section for condition of materials at delivery.

5. Section for verification that installation meets contract documentation and any special installation instructions by respective manufacturer.

6. Space at the end of the form for the installer to print their name and company name, fill in the date, and sign or initial.

7. Space at the end of the form for the Quality Control inspector designated for the scope to review and accept installation verification. QC Inspector must perform Install Verification and verify each element identified in form has been reviewed for conformance with contract documents and in accordance with the Contractors Quality Control Inspection and Test Plan as part of Section 01 45 00 - Quality Assurance/Quality Control.

8. Space to identify the area of work for which the installer is executing the Installation Verification Checklist.

9. Description of the quality criteria as it pertains to the specific work. Include a checkbox for each criteria.

10. Example checklists/test forms can be provided upon request.

C. Quality Criteria: Installation Verification Checklists shall address the following quality criteria.

1. Make and model match approved submittals.

2. Equipment is installed without visible damage.

3. Location is as indicated on drawings.

4. Equipment is accessible for maintenance using safe work practices.

5. There is sufficient space to remove and replace components intact without demolishing other work.

6. Power unit is accessible for adjustment, maintenance, and testing, including replacement of components or the entire assembly.

7. Hoistway is accessible for adjustment, maintenance, testing and replacement of fire alarm, fire detection and fire suppression devices and equipment.

8. Locations of fire detection and fire suppression devices and equipment are effective for intended functions.

9. Hoistway shaft penetrations are sealed.

10. Hoistway, equipment room or pits are provided by others per Contract Documents, including dimensions, materials and supporting infrastructure.

D. Fill out, sign, and submit the Installation Verification Checklists for Conveying Equipment weekly while the Work is being installed. The intent is to fill out and sign the Installation Verification Checklist as work proceeds to improve the quality of the installation.

E. Before performing a Commissioning Test, installation verification checklists must be performed and completed by QC inspector designated for the appropriate area specified here in and within the Contractors Quality Control Inspection and Test Plan as part of Section 01 45 00 - Quality Assurance/Quality Control. Submit completed Installation Verification Checklists for work included in the Commissioning Test.

3.04 LEVEL 1 START-UP REQUIREMENTS

A. [1408-SU-01: Electric Traction Elevators or Hydraulic Elevators]:

1. System/Equipment to be Tested:

a. Elevators and associated elevator equipment and controls in accordance with elevator requirements as stated in the Contract Documents.

2. Functions to be Tested:

a. Installation verification and start-up

b. Alignment inspections and verifications included in Appendix:

1) E – Roped Elevator Clearance Verification Form.

2) F – Roped Elevator Safety Test Data Sheet.

3) G – Holed Jack Alignment.

4) H – Holeless Jack Alignment.

5) I - Hydraulic Pressure Tests & Inspections.

6) J – Hydraulic Running Platform Inspection.

7) K – Rupture Valve Calibration.

8) L – Inspection Procedure for Guide Rails and Holeless Jack Alignment.

3. Conditions of the Test:

a. As required by the manufacturer's written installation verification and start-up instructions.

4. Acceptable Results:

a. Manufacturer's criteria are met.

b. Complete and provide Alignment inspection and verification forms for owner records.

5. [Designer: *Adjust SU to reflect Traction or Hydraulic, if location has both add a unique SU and adjust SU numbering. Adjust Appendix organization accordingly]*

B. 1408-SU-02: Escalators

1. System/Equipment to be Tested:

a. Escalators and associated escalator equipment and controls in accordance with escalators requirements as stated in the Contract Documents.

2. Functions to be Tested:

a. Installation verification and start-up.

1) Confirm variable frequency drive settings are set to accommodate the maximum range of nominal voltage fluctuations from utility provider or adjust and record final settings.

b. Alignment inspections and verifications included in Appendix:

1) M – Escalator Step Track Alignment Inspection.

2) N – Escalator Step Chain Track Alignment Inspection.

3) O – Escalator Skirt Alignment Inspection.

4) P – Step Chain Sprocket Alignment Inspection.

5) Q – Escalator Hold Down Track Alignment Inspection.

3. Conditions of the Test:

a. As required by the manufacturer's written installation verification and start-up instructions.

4. Acceptable Results:

a. Manufacturer's criteria are met.

b. Complete and provide Alignment inspection and verification forms for owner records.

3.05 LEVEL 1 SYSTEM TESTING REQUIREMENTS

A. 1408-S-01: Escalators Operation:

1. Escalators Operation as a System, validating operating scenarios and features.

2. Functions to be Tested and Acceptance Criteria:

a. Airborne Noise Control: During normal operation measure noise levels. All DBA readings to be taken 3 feet 0 inches above escalator at any point of its length using the “A”-weighted scale. Measured noise levels relating to escalator equipment and its operation do not exceed 65 dBA [If station is located near highway or similar loud ambient noise source, measured noise levels associated with escalator to be no more than 5 dBA above the measured ambient].

b. Step and Handrail Speed: During normal operation measure step and handrail speed for Unloaded and Loaded conditions in both the upward and downward direction. Loaded condition to be measured by loading a normally operating unit, with a minimum of 10 people, spaced at 1 per step, up to a number representing a person occupying every occupiable step of travel. Load may be simulated using a representative load of 200 pounds per person for 90% of total steps. Step speed must be 100 FPM plus or minus 10 percent under all loading condition (Unloaded and Loaded). (for 20-foot travel, time is no less than 10.9 seconds nor greater than 13.3 seconds) in upward direction and in downward direction. Handrail speed is consistent with step speed. Any difference in speed must not exceed one inch of alignment change between step and handrail over the full length of travel.

c. Brake Operation: Verify deceleration, stopping and holding performance of the brakes during normal operations, and in Unloaded and Loaded conditions. Safely decelerate, stop, and hold rated load in accordance with Code requirements. Brakes stop escalator operating in the down direction at a rate not greater than 3 feet per second per second.

d. Sleep Function: During normal Unloaded conditions, verify unit detects inactivity upon identified parameters and decelerates to a minimum speed allowed. Verify unit re-engages upon detection of approaching user at an acceptable acceleration as indicated in Contract documents or regulated by Labor and Industries. *[Designer: Remove this if not applicable or modify to match parameters defined for Sleep Mode functionality]*

e. Local Control: Verify the use of the key-operated switches and emergency stop buttons located at upper and lower newel or stanchion-mounted operating station to perform the following functions:

1) At upper operating station, start escalator in up direction.

2) At upper operating station, stop escalator.

3) At upper operating station, start escalator in down direction.

4) At upper operating station, stop escalator by using the emergency stop button. When the cover to the button an audible warning signal must be activated. The signal must have a minimum sound intensity of 80 dBA at the button location. Emergency stop button shall cause an alarm at the LCC when activated.

5) At lower operating station, stop escalator.

6) At lower operating station, start escalator in up direction.

7) At upper operating station, stop escalator.

8) At lower operating station, stop escalator by using the emergency stop button. When the cover to the button is pressed an audible warning signal must be activated. The signal must have a minimum sound intensity of 80 dBA at the button location. Emergency stop button shall cause an alarm at the LCC when activated.

B. 1408-S-02: Electric Traction and Hydraulic Elevators Operation:

1. System/Equipment to be Tested:

a. Elevators and associated elevator equipment and controls in accordance with electric traction elevators requirements as stated in the Contract Documents.

b. Elevators and associated elevator equipment and controls in accordance with hydraulic elevators requirements as stated in the Contract Documents.

2. Functions to be Tested:

a. Call and dispatch controls.

b. Lobby and cab position indicators.

c. Proximity detection device operation.

d. Fire alarm response.

e. Elevator car telephone.

f. Elevator alarm.

g. Intercom.

h. Access Card Reader.

i. CCTV.

3. Conditions of the Test:

a. From each floor, call the car to the test floor; dispatch the car to each other station. Verify correct response and function. Verify elevator system-generated message and visual indication properly announces car direction and floor.

b. At each floor, place an object in the path of the closing door and verify safety functionality of door.

c. Observe elevator response to fire alarm condition in normal power mode.

d. Operate telephone according to posted instructions in normal power condition.

e. Operate the elevator alarm button in normal power condition.

f. Operate the intercom in normal power condition.

g. Observe elevator response to fire alarm condition in emergency power mode.

h. Operate telephone according to posted instructions in emergency power condition.

i. Operate the elevator alarm button in emergency power condition.

j. Operate the intercom in emergency power condition.

k. Operate telephone according to posted instructions during fire alarm.

l. Operate the elevator alarm button during fire alarm.

m. Operate the intercom during fire alarm.

n. Verify functionality of card reader.

o. Verify functionality of CCTV.

4. Acceptable Results:

a. Car responds to calls and dispatches appropriately. Doors open and close as required. Arrival signals function as expected.

b. Proximity detection device stops door closure.

c. Elevator responds to fire alarm as required in normal power mode.

d. Telephone connects as required in normal power condition.

e. Elevator alarm is initiated in normal power condition.

f. Intercom communicates as required in normal power condition.

g. Elevator responds to fire alarm as required in emergency power mode.

h. Telephone connects as required in emergency power condition.

i. Elevator alarm is initiated in emergency power condition.

j. Intercom communicates as required in emergency power condition.

k. Telephone connects as required during fire alarm.

l. Elevator alarm is initiated during fire alarm.

m. Intercom communicates as required during fire alarm.

n. [Access card reader allows intermittent floors to be accessed OR access card reader allows access to elevator cab outside of scheduled hours]

o. Elevator Cab Is visible via camera on CCTV system.

C. 1408-S-03: Elevator Airborne Noise Control:

1. System/Equipment to Be Tested:

a. Elevators and associated elevator equipment and controls.

2. Functions to Be Tested:

a. Control of airborne noise generated by elevator operation.

3. Conditions of the Test:

a. With other equipment not operating, and no passengers in elevator, measure sound:

1) 3 feet - 0 inches away from hoistway entrance with elevator in operation.

2) 5 feet - 0 inches off of the floor and 1 foot 0 inches from the wall within the elevator cab.

3) 5 feet - 0 inches away from elevator equipment located in machine room.

4. Acceptable Results

a. Noise levels relating to elevator equipment and its operation do not exceed:

1) 55 dBA continuous and 62 dBA intermittent at hoistway entrance.

2) 55 dBA continuous and 62 dBA intermittent within elevator cab.

3) 80 dBA within elevator machine room.

D. 1408-S-04: Washington State Elevator Inspection Readiness:

1. System/Equipment to be Tested:

a. Elevators and associated elevator equipment and controls in accordance with electric traction elevators requirements as stated in the Contract Documents.

b. Elevators and associated elevator equipment and controls in accordance with hydraulic elevators requirements as stated in the Contract Documents.

2. Functions to be Tested:

a. Readiness for Washington State Elevator Inspection

3. Conditions of the Test:

a. Provide technicians, instrumentation, and tools to perform commissioning tests required for inspection by Labor & Industries or any other AHJ required to put units into operation.

b. Perform the tests that the Washington State Elevator Inspector will require, according to Labor and Industries procedures.

4. Acceptable Results:

a. Performance meets or exceeds Labor and Industries requirements in advance of elevator inspection by the Washington State Elevator Inspector.

3.06 LEVEL 3 INTER-STATION SYSTEM INTERFACE TEST REQUIREMENTS

A. Perform Level 3 testing to ensure the correct exchange of data and communication between the equipment supplied and integration with existing head end systems, including:

1. The CCTV security camera system at the Security Operations Center and LCC.

2. [The software and network at SOC, and the Access Control System equipment provided for the Stations and Parking Garages under this Contract.]

3. Remote monitoring equipment and system furnished by others and coordinated by Sound Transit Vertical Conveyance Operational team.

B. Level 3 Test Support: During the Level 3 testing period, must be coordinated with Sound Transit, and the team of Transit Systems within Operations. Provide adequate personnel to adjust equipment and troubleshoot system failures that might arise. Conduct Level 3 tests with the assistance from Contractor, Construction Management, External Systems Contractors, Operations, and the final design consultant. Systems will be tested together during Level 3 Testing to ensure proper functionality, inter-operability, and reliability of systems necessary for operation.

C. 2808-IIS-01 Security and Communication Elements – Remote Interface:

1. System/equipment to be tested:

a. CCTV Camera inside cab.

b. [Access Card Readers].

c. Remote Monitoring Equipment.

2. Functions to be tested:

a. Video Image from Camera.

b. [Elevator functionality with Card Reader].

c. Remote monitoring information of elevator and escalator operations.

3. Acceptance Criteria:

a. Video image is integrated into head end system and available for viewing at SOC and LCC.

b. [Elevator functions as intended with card reader use:

1) [Stopping on maintenance level floors].

2) [Not allowing entry after hours.]

c. Owner remote monitoring system has visibility to elevator and escalator operation and alarms.

4. [Designer: Determine access card scope and intended sequence for providing access to non-public levels for maintenance personnel and/or securing elevator externally during non-revenue hours if elevator lobby cannot be secured in other means.]

3.07 LEVEL 1, 2 AND LEVEL 3 TEST REQUIREMENTS MATRIX

	1408-IV-0X	1408-ST-0X	1408-SU-0X	1408-C-0X	1408-S-0X	1408-IIS-0X
Electric Traction Elevators	X		X		X	X
Escalators	X		X		X	
Hydraulic Elevators	X		X		X	X

[DESIGNER: ADD OR MODIFY MATRIX AS NECESSARY BASED ON TESTS ADDED OR MODIFIED ABOVE DEPENDING UPON THE LOCATION DESIGN FOR CONVEYING EQUIPMENT]

END OF SECTION

APPENDICES INSPECTION DATA SHEETS TABLE OF CONTENTS

Appendix	Inspection and Alignment Form	Commissioning Designation
A	Shaft Inspection Verification Form	1408-IV-01-A
B	Rail Holdpoint Inspection	1408-IV-01-B
C	Escalator Truss Bolt Inspection	1408-IV-02-C
D	Escalator Center-Line Inspection	1408-IV-02-D
E	Roped Elevator Clearance Verification Form	1408-SU-01-E
F	Roped Elevator Safety Test Data Sheet	1408-SU-01-F
G	Holed Jack Alignment	1408-SU-01-G
H	Holeless Jack Alignment	1408-SU-01-H
I	Hydraulic Pressure Tests & Inspections	1408-SU-01-I
J	Hydraulic Running Platform Inspection	1408-SU-01-J
K	Rupture Valve Calibration	1408-SU-01-K
L	Inspection Procedure for Guide Rails and Holeless Jack Alignment	1408-SU-01-L
M	Escalator Step Track Alignment Inspection	1408-SU-02-M
N	Escalator Step Chain Track Alignment Inspection	1408-SU-02-N
O	Escalator Skirt Alignment Inspection	1408-SU-02-O
P	Step Chain Sprocket Alignment Inspection	1408-SU-02-P
Q	Escalator Hold Down Track Alignment Inspection	1408-SU-02-Q

APPENDIX A

Shaft Inspection Verification Form (rev.2)

Contract#	Elevator#	Date:

MEASUREMENT	LENGTH	WIDTH	OPENINGS		
			Front	Rear	Side
LANDING 1					
LANDING 2					
LANDING 3					
LANDING 4					
PIT DEPTH					
OVERHEAD (Lowest Point of Rafter/Ceiling to the Top Landing Floor)					
TRAVEL #1					
TRAVEL #2					
TRAVEL #3					

DIMENSIONS:	
Field Dimensions	
Shop Drawings Dim.	

DRAINAGE PROVIDED (min. 2 x2 x2 inches)	
Sump Hole	
Gravity Drain	

INSTRUCTIONS:

1. USE THE CHART TO INDICATE ALL FLOOR MARKINGS.
2. LIST THE FLOOR TO FLOOR HEIGHTS.
3. INDICATE WHICH LEVELS SERVED BY THE FRONT/REAR/SIDE ENTRANCES.
4. INDICATE THE PIT DEPTH, OVERALL TRAVEL, AND OVERHEAD HEIGHTS.

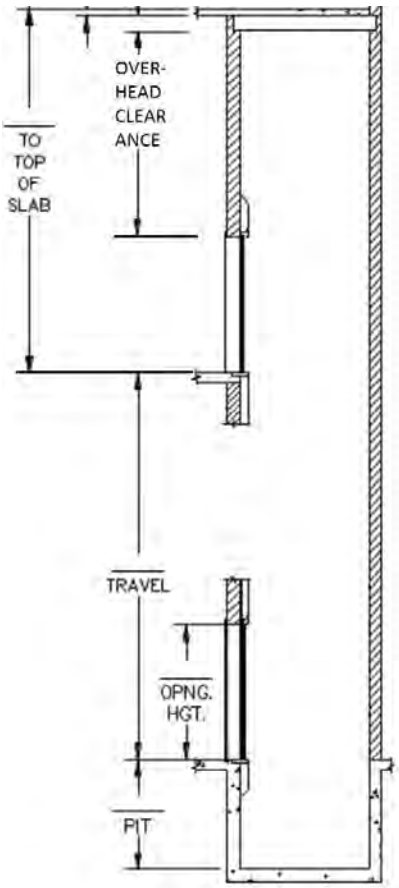

Figure 1- sizes on sketch for illustration purpose only

OBSERVATIONS:

ACCESS OF THE PIT:	
Access by ladder?	
Walk In Access Door?	
Occupied Space below the pit?	
SHAFT STRUCTURE:	
Solid Concrete	
Hollow Masonry	
Solid Filed Masonry	
Metal	

WITNESSED BY:

APPENDIX B

RAIL HOLDPOINT INSPECTION (rev.2)		
CONTRACT#	**ELEVATOR#**	**DATE:**
CHECK RAIL DESIGN BELOW		
A. SIDE POST ◯	B. CORNER POST ◯	C. CANTILEVER ◯

RAIL PLUMB BOB ALIGNMENT

DISTANCE (from plumb bob string)	FACE OF RAIL		Variance (± 1 / 8 inch)	SIDE OF RAIL		Variance (± 1/8 inch)
	RAIL A	RAIL B		RAIL A	RAIL B	
AT BOTTOM BRACKET						
AT 2nd BRACKET						
AT 3rd BRACKET						
AT 4th BRACKET						
AT 5th BRACKET						
AT 6th BRACKET						
AT 7th BRACKET						

RAIL SUPPORT VERIFICATION				DISTANCE BETWEEN GUIDE RAILS		
DISTANCE FROM:	Center to Center of Rail		SHOP DRWG.	MEASUREMENT	FIELD SIZE	SHOP DRWG.
	RAIL A	RAIL B				
PIT FLOOR TO 1st SUPPORT				AT BOTTOM BRACKET		
1st SUPPORT TO 2nd				AT 2nd BRACKET		
2nd SUPPORT TO 3rd				AT 3rd BRACKET		
3rd SUPPORT TO 4th				AT 4th BRACKET		
4th SUPPORT to 5th				AT 5th BRACKET		
5th SUPPORT TO 6th				AT 6th BRACKET		
6th SUPPORT TO 7th				AT 7th BRACKET		

1. Brackets to be pinned at completion of inspection.
2. For cantilever cars, tack weld nut after inspection.
3. Complete sketch from right, specify position of rails and door openings at floors (complete lines where is no openings).

OBSERVATION:

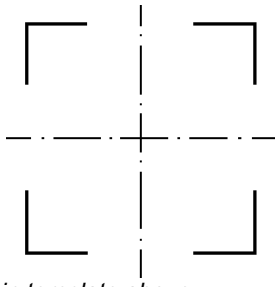

Indicate in template above:
Door Opening & Rails Position

WITNESSED BY:

APPENDIX C

ESCALATOR TRUSS BOLT INSPECTION

CONTRACT#	ESCALATOR#	DATE:
STATION:	MODEL#	

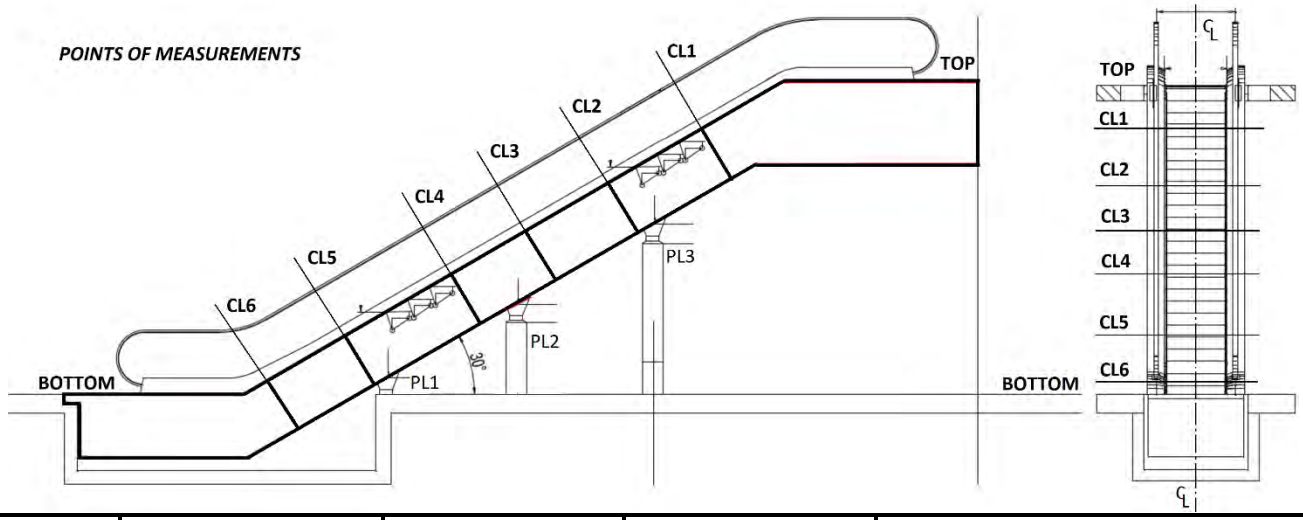

LOCATION	#1 Factory Made Scribe marks line up exactly at truss junction points		#2 Bolts torqued with value of 710 Nm (524 ft-lbf)		#3 Positions of bolt heads and nuts permanently marked	
	Yes	No	Yes	No	Yes	No
CL1						
CL2						
CL3*						
CL4*						
CL5*						
CL6*						

Inspections for locations marked with asterisks to be provided if necessary, depending on number of truss sections.

PROCEDURE:

1. Escalator is positioned in the wellway on the top, intermediate and bottom supports.
2. Verify that all factory made scribe marks line up at truss junction points.
3. Torque wrench calibration shall be confirmed by a valid calibration certificate.
4. All truss bolts shall be pre-tightened prior to the inspection to slightly under the required torque value.
5. The torque wrench shall be set according with manufacturer's requirement of 710 Nm (524 ft-lbf).

Note: Inspections to be performed on all truss connection bolts

WITNESSED BY:	
	Technician Name (Printed)
	Signature
	Date

APPENDIX D

ESCALATOR CENTER-LINE INSPECTION

CONTRACT#	ESCALATOR#	DATE:
STATION:	MODEL#	

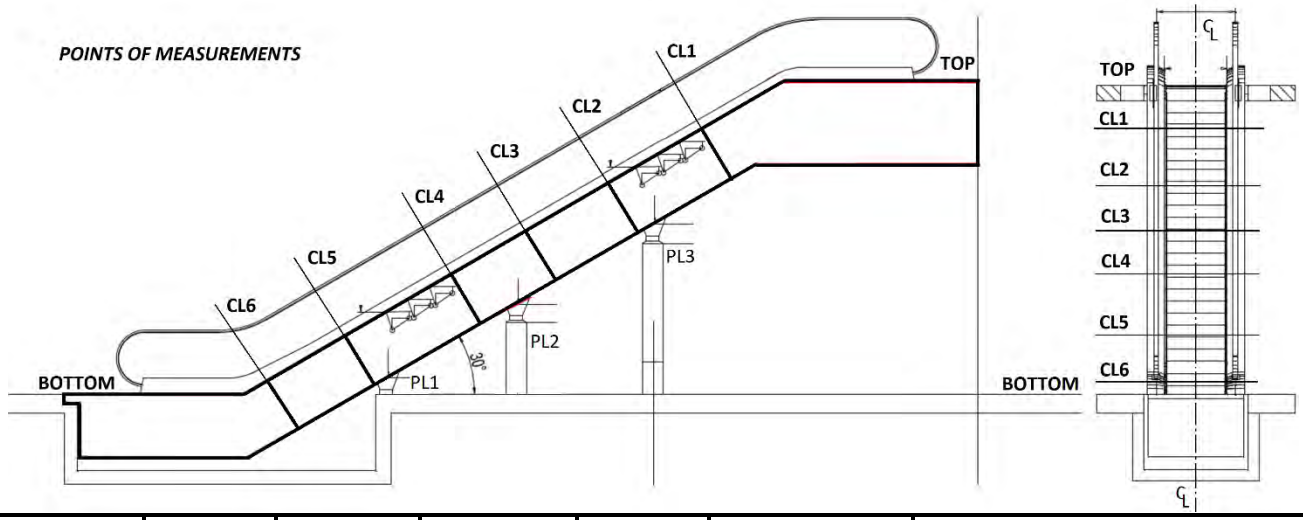

LOCATION	Left of C_L mark	Right of C_L mark	Deviation ±Δ	Confirm Punch of New Mark	Acceptance criteria ± 1.5 mm.	
					Pass	Fail
Top						
CL1						
CL2						
CL3*						
CL4*						
CL5*						
CL6*						
Bottom						

PROCEDURE:

1. Install center-line stanchions at the top and bottom of truss per factory punched center marks.
2. Stretch a piano wire between the stanchions, making taut with a turnbuckle.
3. Drop a brass plumb bob from the piano wire to the factory made scribe marks (CLs) to verify alignment.
4. Place punch mark where plumb bob meets cross member if different from factory mark

Note: Measurements marked with asterisks to be provided if necessary, depending on number of truss sections.

WITNESSED BY:	
	Technician Name (Printed)
	Signature
	Date

APPENDIX E

Roped Elevator Clearances Verification (rev.4)

Contract#	Elevator#	Date:

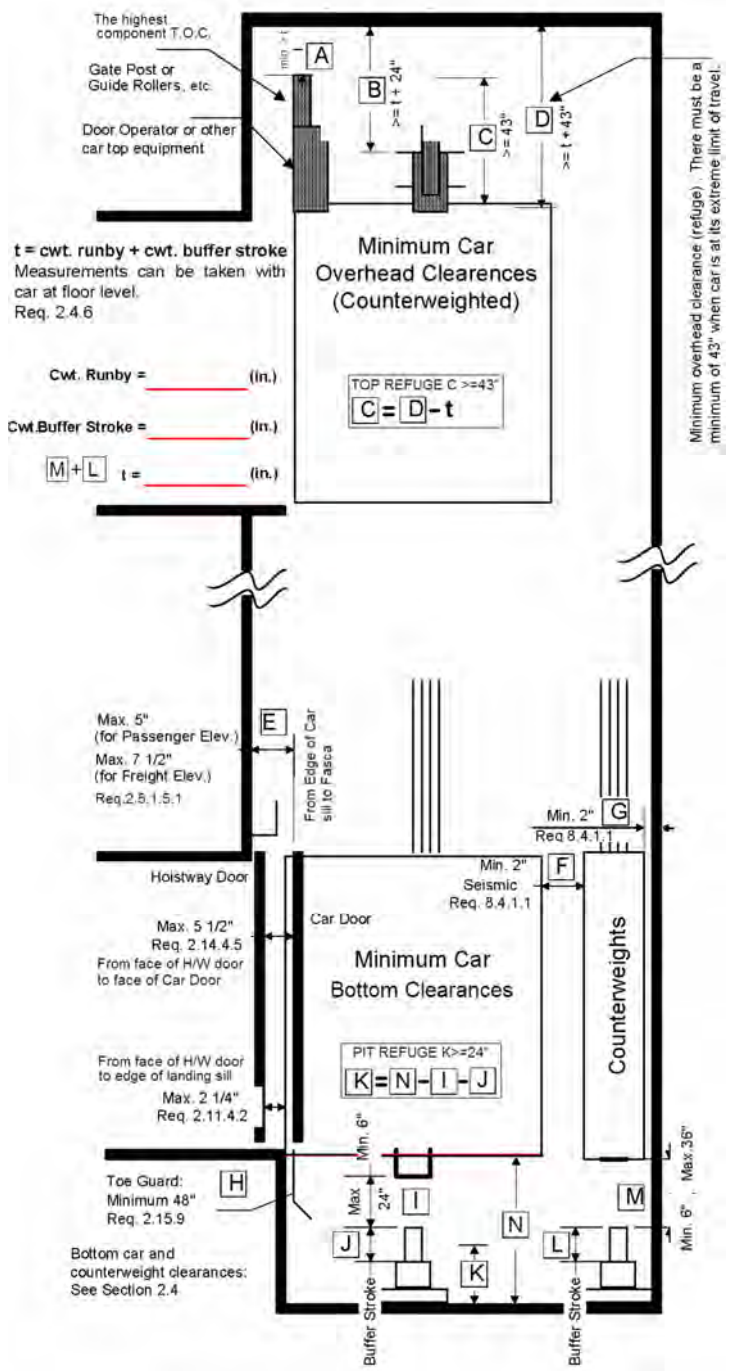

MEASUREMENTS:			
A		Min. > t	
B		Cross Head to Overhead Min. >= t + 24inches	
C		Top Refuge Min. >= 43 inches	
D		Overhead Clearance Min. >= t + 43 inches	
E		5 inches=< for pass. elev. 7 ½ inches=< for freight elev.	
F		Car to Counterweight Min. >= 2inches	
G		To H/W enclosure Min. >=2 inches	
H		Toe Guard Min. >= 48 inches	
I		Car Runby Max. =< 24 inches Min. >= 6 inches	
J		Car Buffer stroke	
K		Pit Refuge Min. >= 24 inches	
L		Cwt. buffer stroke	
M		Cwt. Runby Max. =< 36 inches Min. >= 6 inches	
N		Under Car Clearance	
8.15		Top	Clearance between Car & Landing Sills Min. => ½ inch Max <=1 ¼ inch
		Int.	
		Bot.	

INSPECTED BY:	WITNESSED BY:	

APPENDIX F

ROPED ELEVATOR SAFETY TEST DATA SHEET (rev.4)

Contract#	Elevator#	Date:

Governor Data			Car Designation					
Rated Speed	Car	Cwt	Overspeed Switch(fpm)		Trip Speed (fpm)		Pull Thru (lbf)	
Trip Speed (fpm)			Car	Cwt.	Car	Cwt	Car	Cwt
Slide (in.)								

Type of Safeties:						Max. / Min. Runby (in.)		Oil Buffer Return		Emergency Brake Tests (2.19.3) indicate type below		Pass
A	◯	B	◯	C	◯					◯	Cwt. Safeties	
Slide (in.)		Pull Out (lbf)				Cwt.	Car	Max. 90 seconds		◯	Car	
Car	Cwt.	Car	Cwt.			6” min. 36”max.	6” min. 24”max.	Car	Cwt.	◯	Suspension Means	
										◯	Drive Sheave	

Rated Speed Test (fpm)				Running Clearances nominal measures throughout H/W					Audible Signals	
Empty Car		Full Load								
Up	Down	Up	Down	Sill Clearance ½ “ – 1 ½ “ or ¾ “ – 1 ½ “		Car to H/W from Door Sides(in.)		Car to Cwt. Minimum 2”	Floor Passing Tone	Emerg. Alarm 80 db.
				Front	Rear	Front	Rear			

Door Measurements		
Designation:	Front	Rear
Door Pressure (30 lbs)		
Door Closing Speed (ft./s)		
Car Door Timing (3 sec. ADA req.)		
Hall Door Timing (5 sec. ADA req.)		

Refuge Space				
Top		Bottom (2.4.1.3)		
Minimum Height (43 in.)	H=	(24” x 48”) Area x 24” Height OR (18” x 35”) Area x 42” Height		
D=	W=	H=	D=	W=

Illumination

Minimum FTC						
E-Light 0.2 ftc	Car 20 ftc (ADA)	Pit 10 ftc	M/R 19 ftc	Top Landing 10 ftc	Bot. Landing 10 ftc	Mid. Landing 10 ftc

WITNESSED BY:	

APPENDIX G

HOLED JACK ALIGNMENT FORM (rev.2)

CONTRACT#	ELEVATOR#	DATE:

CHECK BELOW METHOD USED FOR INSPECTION

A. HALO

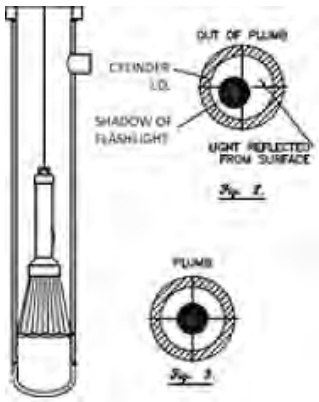

Confirm that distance around the Halo is Evenly Distributed throughout the Entire Length of the Cylinder

circle one

YES	NO

B. PLUMB BOB

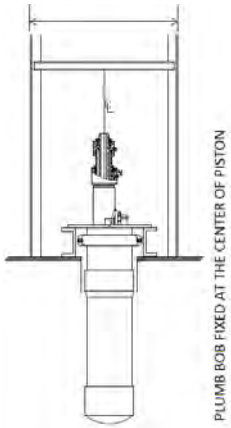

Confirm that Plumb Bob Remained at the Bottom Center of the Cylinder

circle one

YES	NO

Does PVC Liner extend above the floor?

circle one

YES	NO	N/A

Is the base plate of the cylinder secured firmly on floor?

circle one

YES	NO

Is the piston welded or threaded (multi-section)?

circle one

YES	N/A	NO

Is the cylinder welded or threaded (multi-section)?

circle one

YES	N/A	NO

Has the area around the cylinder support been filled-in with concrete?

circle one

YES	N/A	NO

Visually inspect piston surface to verify condition. (Quantity and Depth of score marks if any)

circle one

YES	N/A	NO

Have the welds on the cylinder been grounded flush to the surface?

circle one

Yes	N/A	NO

Has the area between the PVC lining and the steel casing filled with sand?

circle one

YES	N/A	NO

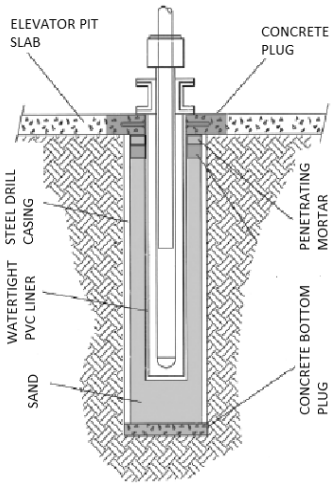

JACK TO RAILS ALIGNMENT VERIFICATION

(rails centerline regarding piston centerline has to be checked)

DISTANCE FROM:	FACE OF RAIL		SHOP DRWG.	SIDE OF RAIL	Variance (± ⅛")	SHOP DRWG.
	RAIL A	RAIL B				
JACK ^{C}L						

OBSERVATION:

WITNESSED BY:

APPENDIX H

HOLELESS JACK ALIGNMENT FORM (rev.2)

CONTRACT#	ELEVATOR#	DATE:

CHECK BELOW METHOD USED FOR INSPECTION

A. LEVEL	◯	OTHER METHOD:
B. PLUMB BOB	◯	

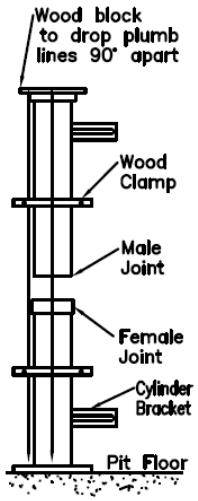

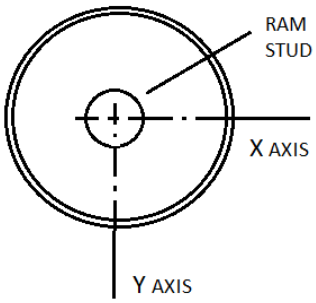

If Plumb Bob is used, check the distance between plumb line along the X and Y axes of the jack cylinder.

CYLINDER	X Axis	Y Axis
TOP		
MIDDLE		
BOTTOM		

Are the jack(s) located as shown on the approved Shop Drawings? (Check Dimensions)

circle one

YES	NO

Is the piston welded or threaded (multi-section)?			Is the cylinder welded or threaded (multi-section)?			Check for proper anchor bolts & torque. Inspect jack to wall/ rails support.		
circle one			*circle one*			*circle one*		
YES	N/A	NO	YES	N/A	NO	PASS	FAIL	N/A

Visually inspect piston surface to verify condition. (Quantity and Depth of score marks if any)			Have the welds on the cylinder been grounded flush to the surface?			Does the base plate of the cylinder secure firmly on floor?		
circle one			*circle one*			*circle one*		
YES	N/A	NO	Yes	N/A	NO	YES	N/A	NO

OBSERVATION:

WITNESSED BY:

APPENDIX I

HYDRAULIC PRESSURE TESTS & INSPECTIONS (rev.2)			
	CONTRACT#	ELEVATOR#	
A. HYDROSTATIC TEST		B. RUPTURE VALVE CALIBRATION	
SPECIFY SECOND DATE IF ANOTHER TEST COMPLETED APART			
A. DATE:		B. DATE:	
WORKING PRESSURE			
(1.5X) WORKING PRESSURE			
STATIC PRESSURE			
STARTING PRESSURE		CALCULATED BYPASS PRESSURE (125 percent to 150 percent of working pressure	
STARTING TIME		RECORDED BYPASS PRESSURE	
ENDING PRESSURE		RUPTURE VALVE TRIP SPEED	
ENDING TIME		Testing Procedure: 1. Adjust car speed to 130 – 140 FPM with full load. 2. Adjust rupture valve to desired trip speed. 3. Perform rupture valve test. 4. Lock and tag rupture valve 5. Reset car speed and confirm it back to normal.	
PSI ± CHANGE (IF ANY)			
PRESSURE GAUGE LOCATION (prior to shut-off valve or after shut-off valve)			

ASME Code Section	INSPECTION/VERIFICATION	*check one*		
		YES	NO	N/A
3.19.4.5	Is pressure gauge with shut-off valve adjacent to hydraulic control valve?			
3.19.4.7	Is tested rupture valve is tagged and sealed?			
3.24.1.1	Is a marking Plate of Working Pressure on the Machine?			
3.24.2.2	Is there a Minimum Level Indication on the tank?			
	Certificate of Calibration for pressure gauge(s) provided			
	Inspect that installed V-belt type is 1(one) piece with 3 grooves			
	Inspect for installed isolation coupling on piping from tank			
	Inspect that ANSI, Schedule 80 seamless piping used for oil line			
	Verify that tank has adequate clearance and access for adding of oil			
	Verify type of control valve installed			
	Verify type of hydraulic oil used			

WITNESSED BY:	WITNESSED BY:

APPENDIX J

Hydraulic Running Platform Inspection (rev.2)

Contract#		Elevator#			Date:
ASME CODE SECT.	**PARAMETER**	**Code Requirements**	**Shop Dwg**	**Field Meas.**	Observation:
	Elevator Rated Speed(fpm)				
3.4.4 3.4.5	Top Runby Clearance	3 inches to 6 inches Min. based on speed 24 inches Max.			
	Cross Head to Overhead Structure (Car to be on Stop Ring)	12 inches Minimum			
3.4.2	Top/Side Refuge Space Clearance (Car to be on Stop Ring)	43 inches Minimum			
5.2.1. 5.2.2.	Bottom Runby Clearance (Car to be on buffer)	3 inches to 6 inches Min. based on speed 24” Max.			
	Bottom Refuge Space Clearance (Car to be on buffer)	24 inches – 24 inches x48 inches 42 inches – 18 inches x35 inches Minimum			
3.4.6.	Door Operator to Overhead Structure (Car to be on Stop Ring)	6 inches Minimum			
8.15 (door inspection module)	Clearance between the Car Sill and the Landing Sill **(LEVEL 1)**	½ inches Min. and 1-¼ inches Max.			
	Clearance between the Car Sill and the Landing Sill **(LEVEL 2)**	½ inches Min. and 1-¼ inches Max.			
	Clearance between the Car Sill and the Landing Sill **(LEVEL 3)**	½ inches Min. and 1-¼ inches Max.			
	Clearance between the Car Sill and the Landing Sill **(LEVEL 4)**	½ inches Min. and 1-¼ inches Max.			

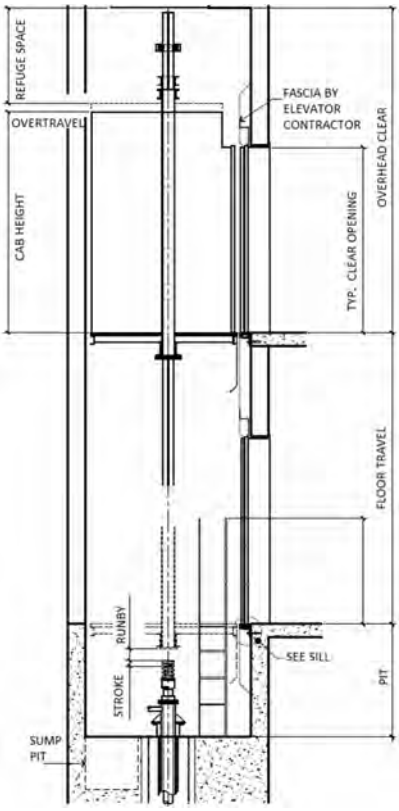

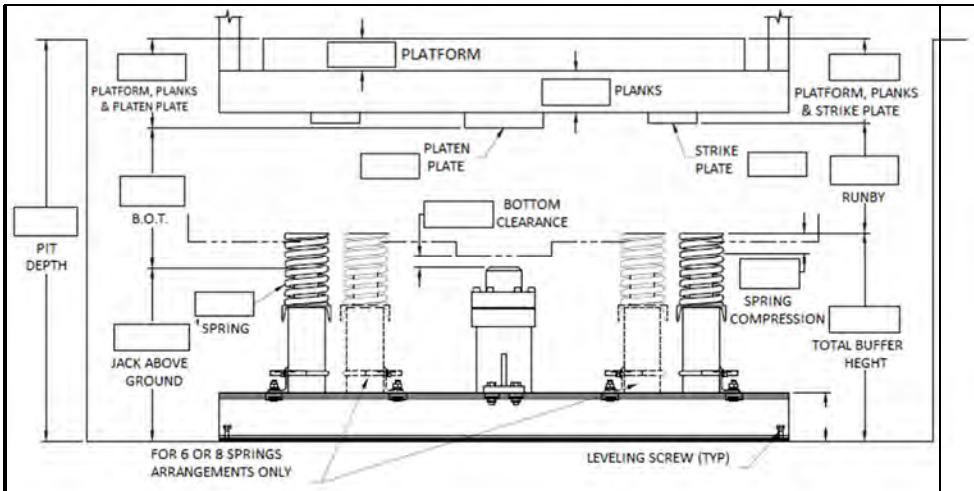

(Note: sizes on sketches for illustration purpose only)

WITNESSED BY:

APPENDIX K

RUPTURE VALVE CALIBRATION (rev.2)		
CONTRACT#	**ELEVATOR#**	**DATE:**

WORKING PRESSURE	
(1.5X) WORKING PRESSURE	
STATIC PRESSURE	
CALCULATED BYPASS PRESSURE (125% to 150% of working pressure)	
RECORDED BYPASS PRESSURE	
RUPTURE VALVE TRIP SPEED	

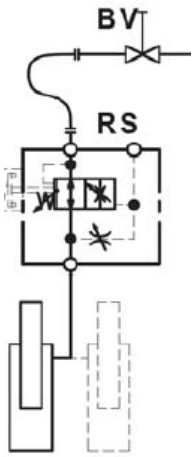

Testing Procedure:

1. Conduct adjustments with a fully loaded car.
2. Adjust car speed to 130 – 140 FPM with full load.
3. Adjust rupture valve to desired trip speed.
4. Perform rupture valve test.
5. Lock and tag rupture valve
6. Reset car speed and confirm it back to normal.

ASME Code Section	INSPECTION/VERIFICATION	*check one*		
		YES	NO	N/A
3.19.4.7	Is tested rupture valve is tagged and sealed?			
3.24.1.1	Is a marking Plate of Working Pressure on the Machine?			
	Certificate of Calibration for pressure gauge(s) provided			

OBSERVATION:

WITNESSED BY:	

APPENDIX L

INSPECTION PROCEDURE FOR GUIDE RAILS & HOLELESS JACK ALIGNMENT (CANTELIEVER ELEVATOR)

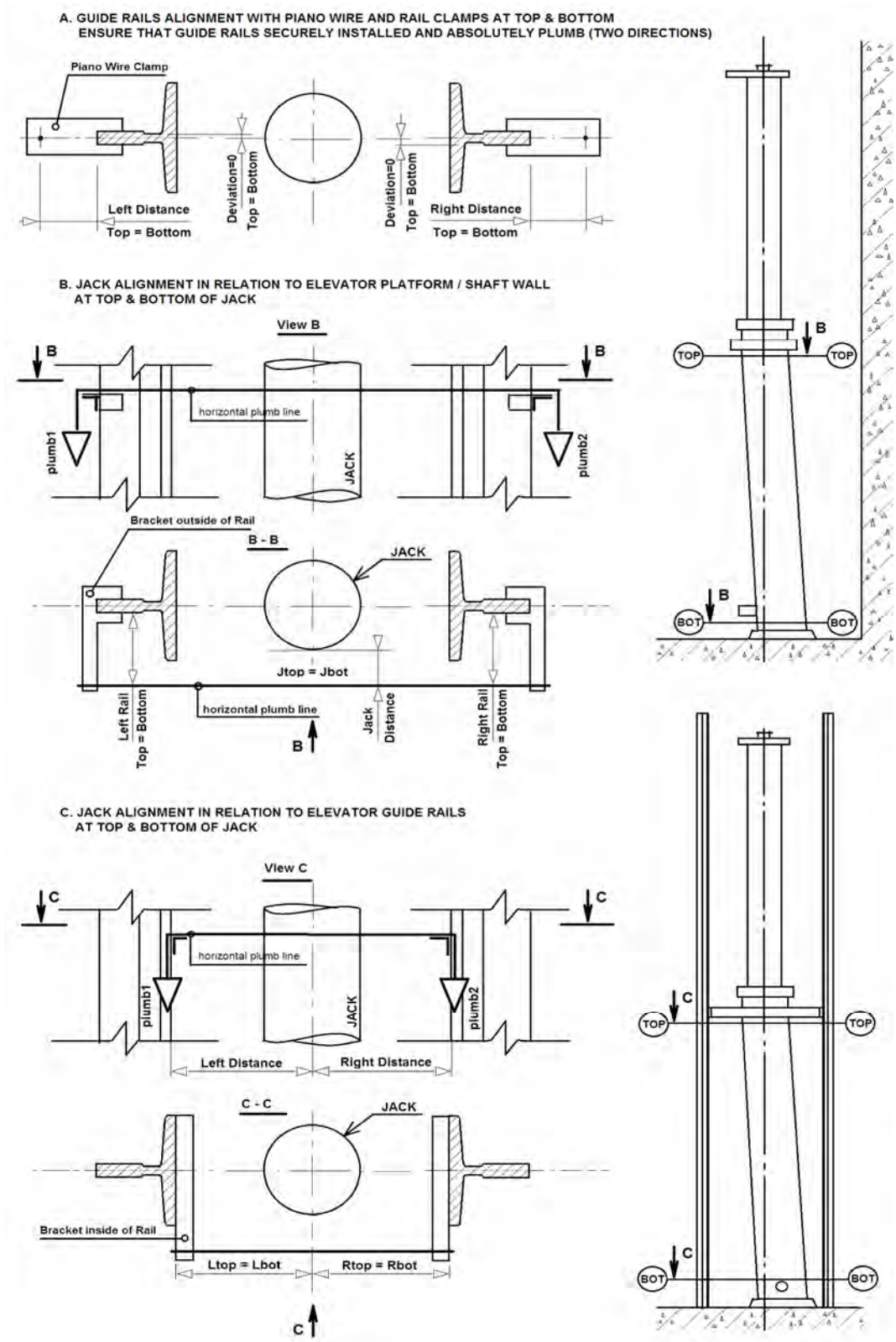

Attachments: 1. WURTEC Rail Alignment Starter Instruction Sheet 2. Approved Rail Hold Point Alignment Inspection Form 3. Approved Holeless Jack Alignment Inspection Form	

APPENDIX M

ESCALATOR STEP TRACK ALIGNMENT INSPECTION

CONTRACT#	ESCALATOR#	DATE:
STATION:	MODEL#	

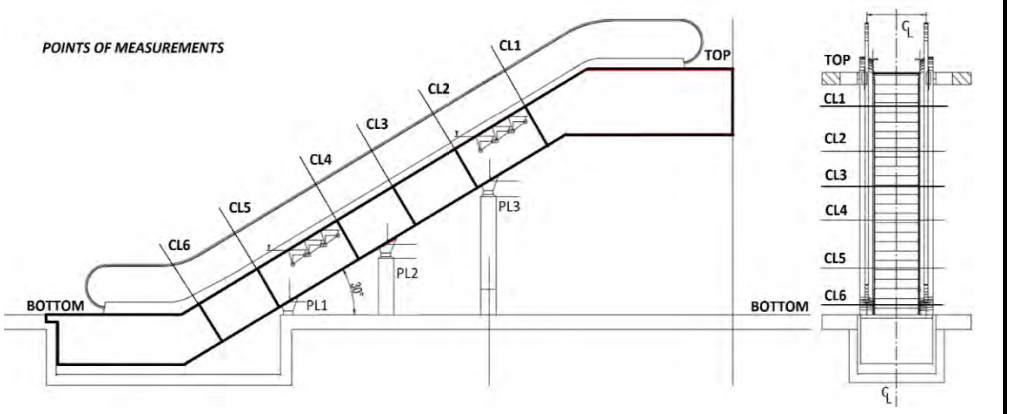

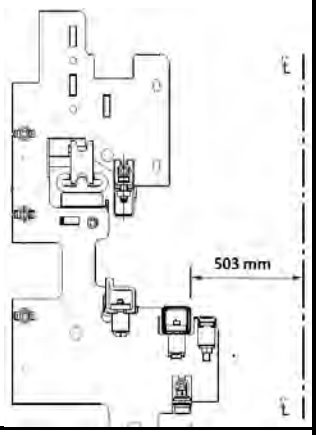

LOCATION	Measurement criteria: 503 mm.		Track Deviation	Acceptance criteria ± 1.5 mm.		Track level within bubble "ring"	
	Left of CL mark	Right of CL mark	±ΔT	Pass	Fail	Pass	Fail
CL1							
CL2							
CL3*							
CL4*							
CL5*							
CL6*							

PROCEDURE:

1. Drop a brass plumb bob from the piano wire to the as-build scribe marks (CLs) if truss center-line alignment does not exceed acceptance criteria.
2. In case when truss center-line alignment for as-build punch marks exceeded acceptance criteria – all tracks' positions shall be corrected before start of track alignment inspection.
3. Measure from inside of track to centerline on each side.
4. Repeat at each truss split along incline.

Note: Measurements marked with asterisks to be provided if necessary, depending on number of truss sections.

WITNESSED BY:	
	Technician Name (Printed)
	Signature
	Date

APPENDIX N

ESCALATOR STEP CHAIN (LIP) TRACK ALIGNMENT INSPECTION

CONTRACT#	ESCALATOR#	DATE:
STATION:	MODEL#	

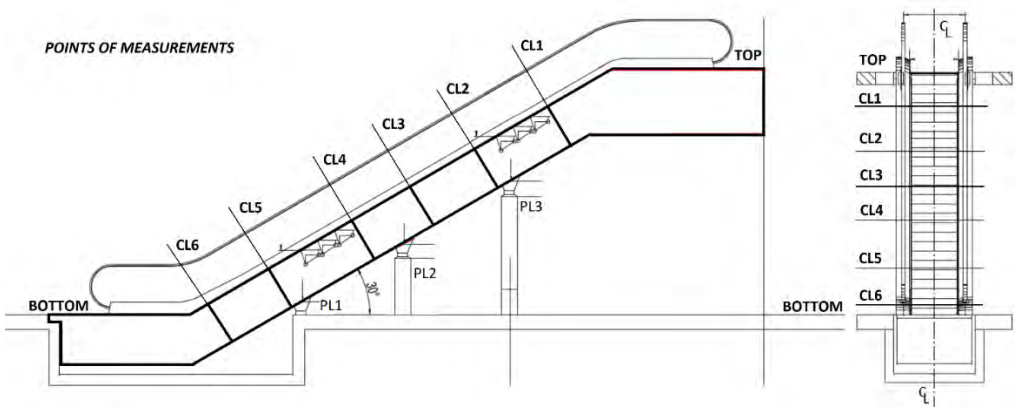

LOCATION	Measurement criteria: 622.5 mm.		Track Deviation	Acceptance criteria ± 1.5 mm.		Track level within bubble "ring"	
	Left of CL mark	Right of CL mark	±ΔT	Pass	Fail	Pass	Fail
CL1							
CL2							
CL3*							
CL4*							
CL5*							
CL6*							

PROCEDURE:

1. Drop a brass plumb bob from the piano wire to the as-build scribe marks (CLs) if truss center-line alignment does not exceed acceptance criteria.
2. In case when truss centerline alignment for as-build punch marks exceeded acceptance criteria – all tracks' positions shall be corrected before start of track alignment inspection.
3. Measure from inside of track to centerline on each side.
4. Repeat at each truss split along incline.

Note: Measurements marked with asterisks to be provided if necessary, depending on number of truss sections.

WITNESSED BY:	
	Technician Name (Printed)
	Signature
	Date

APPENDIX O

ESCALATOR SKIRT ALIGNMENT INSPECTION

CONTRACT#	ESCALATOR#	DATE:
STATION:	MODEL#	

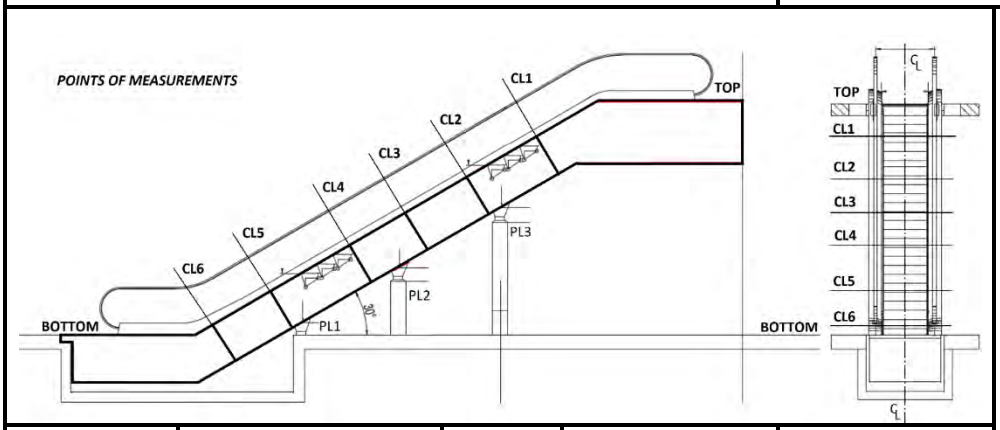

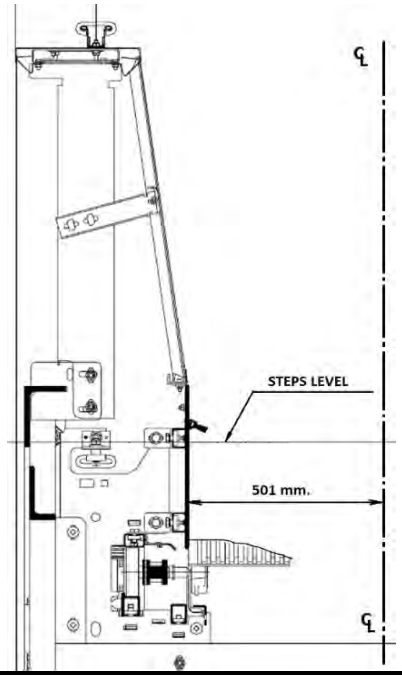

LOCATION	Measurement criteria: 501 mm.		Track Deviation	Acceptance criteria ± 1.5 mm.		Track level within bubble "rings"	
	Left of CL mark	Right of CL mark	±ΔT	Pass	Fail	Pass	Fail
TOP							
CL1							
CL2							
CL3*							
CL4*							
CL5*							
CL6*							
BOTTOM							

PROCEDURE:

1. Drop a brass plumb bob from the piano wire to the as-build scribe marks (CLs) if truss center-line alignment does not exceed acceptance criteria.

1. In case when truss center-line alignment for as-build punch marks exceeded acceptance criteria - track and skirts positions shall be corrected before start of alignment inspection.
2. Measure from inside of skirt board to center-line on each side.
3. Repeat at each truss split along incline.

Note: Measurements marked with asterisks to be provided if necessary, depending on number of truss sections.

WITNESSED BY:	
	Technician Name (Printed)
	Signature
	Date

APPENDIX P

STEP CHAIN SPROCKET ALIGNMENT INSPECTION

CONTRACT#	ESCALATOR#	DATE:
STATION:	MODEL#	

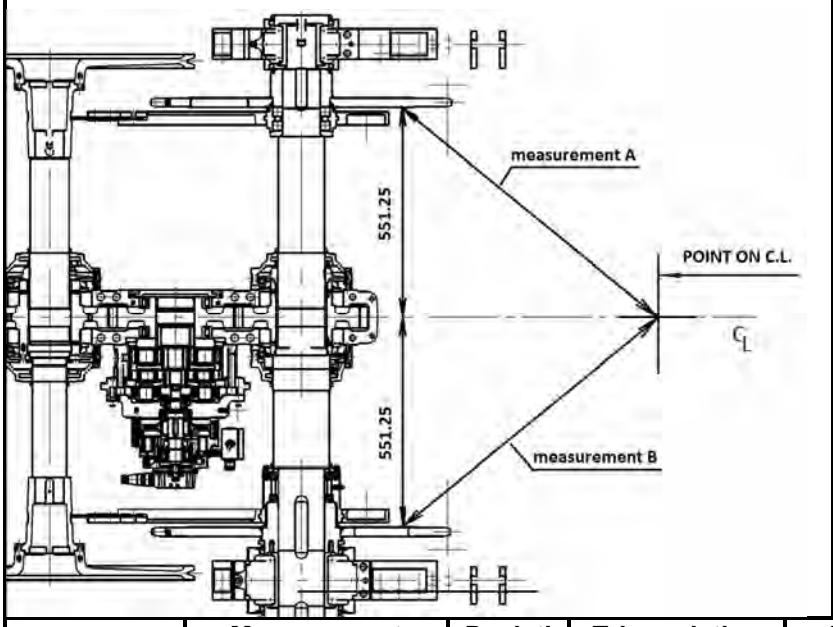

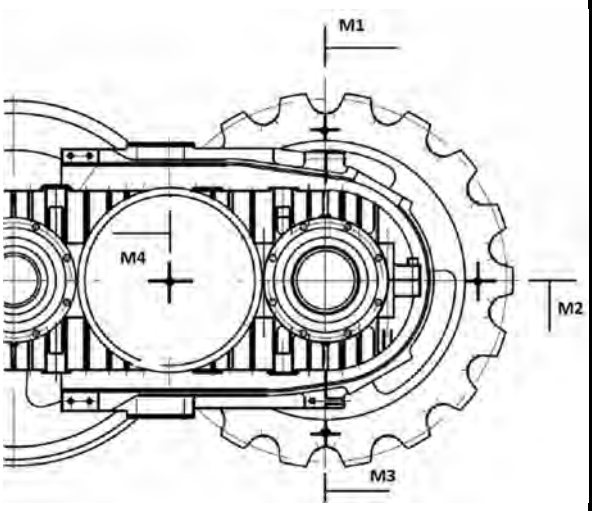

LOCATION	Measurement criteria: 551.25 mm.		Deviation to C.L.	Triangulation measurements (A=B)		Acceptance criteria ± ____ mm.	
	Left of CL mark	Right of CL mark	±ΔM	A	B	Pass	Fail
M1							
M2							
M3							
M4							

PROCEDURE:

1. Drop a brass plumb bob from the piano wire to chosen point on centerline.
2. Mark point on centerline.
3. Using a self-leveling laser centered on piano wire, project beam towards step chain sprocket.
4. Measure from inside of sprocket on each side to the projected centerline.

1. Measure distances “A” and “B” from inside of sprocket to the check mark on center line.
2. Rotate sprocket by 90 degrees at the time and repeat measurements for four consecutive locations M1, M2, M3 and M4

WITNESSED BY:	
	Technician Name (Printed)
	Signature
	Date

STEP CHAIN SPROCKET ALIGNMENT INSPECTION

CONTRACT#	ESCALATOR#	DATE:
STATION:		MODEL#

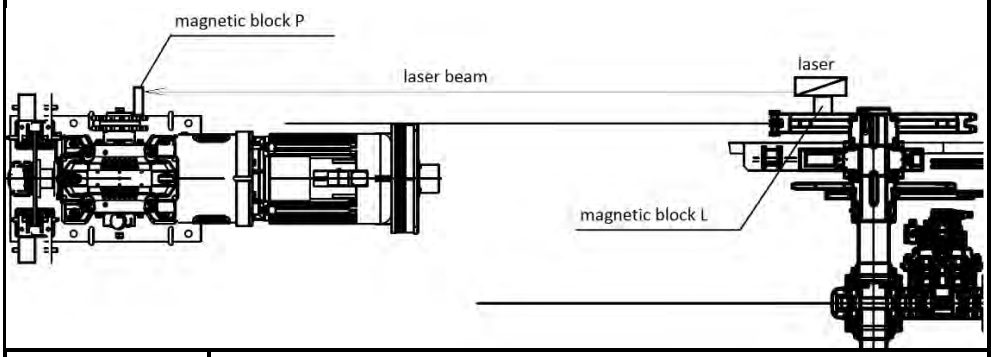

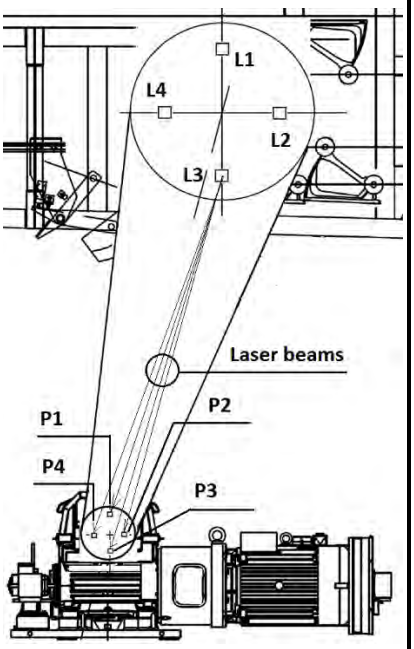

LOCATION	Acceptance criteria ± ____ mm.					
	P1	P2	P3	P4	Pass	Fail
L1						
L2						
L3						
L4						

PROCEDURE:

1.

WITNESSED BY:	
	Technician Name (Printed)
	Signature
	Date

APPENDIX Q

ESCALATOR HOLD DOWN TRACK ALIGNMENT INSPECTION

CONTRACT#	ESCALATOR#	DATE:
STATION:	MODEL#	

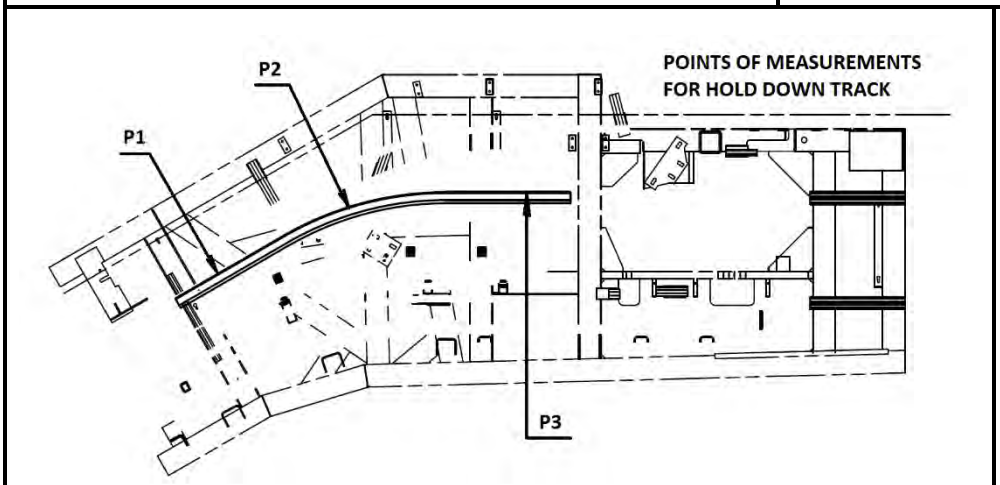

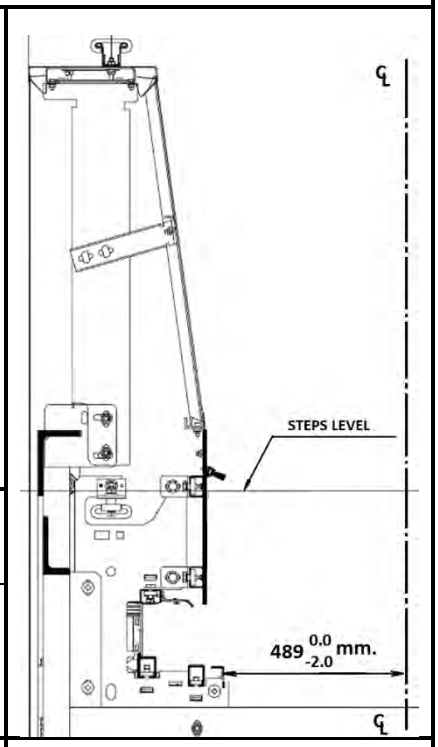

LOCATION	Measurement criteria: 489 mm.		Track Deviation	Acceptance criteria -2.0 mm.		Tacks level within bubble "rings"	
	Left of CL mark	Right of CL mark	±ΔT	Pass	Fail	Pass	Fail
P1							
P2							
P3							

PROCEDURES:

1. Drop a brass plumb bob from the piano wire to the as-build scribe marks (CLs) if truss center-line alignment does not exceed acceptance criteria.
2. In case when truss center-line alignment for as-build punch marks exceeded acceptance criteria - track positions shall be corrected before start of hold down track alignment inspection.
3. Measure from inside of track to centerline on each side (for left and right of centerline).
4. Repeat measurements for total of six points at three locations.

WITNESSED BY:	
	Technician Name (Printed)
	Signature
	Date

END OF APPENDIX

SECTION 14 21 00

ELECTRIC TRACTION ELEVATORS

PART 1 - GENERAL

1.01 SUMMARY

A. Section includes:

1. Requirements for furnishing and installing and providing Maintenance for Gearless Passenger traction elevators as specified and detailed on the Issued for Construction Drawings.

B. Related Work Provided Under Other Sections

1. Hoistway and Pit:

a. Clear, plumb, substantially flush hoistway with variations not to exceed 1 inch at any point.

b. Bevel cants not less than 75 degrees from the horizontal on any rear or sidewall ledges and beams that project or recess 4 inches or more into the hoistway. Not required on hoistway divider beams.

c. Supports at each floor for car and counterweight guide rail fastening. Intermediate car and counterweight guide rail support when floor heights exceed 14 feet 0 inch. Building supports not to deflect more than 1/8 inch under normal conditions, 1/4 inch under seismic conditions.

d. Installation of guide rail bracket supports in concrete. Inserts or embeds, if used, will be furnished under this Section.

e. Wall blockouts and fire rated closure for control and signal fixture boxes that penetrate walls.

f. Cutting and patching walls and floors. Finished floors slope away from elevator doors.

g. Wall pockets and/or structural beams for support of machine, sheave, and dead-end hitch beams. Do not exceed support deflection of 1/1666 of span under static load. Erect from elevator hoistway wall after elevator entrances.

h. Grout around hoistway entrances and sills.

i. Pit access ladder for each elevator.

j. Structural support for car and counterweight buffer impact loads, guide rail loads, and compensation sheave tie-down upthrust.

k. Waterproof pit. Dry sump with flush grate or indirect drain. Provide pump or indirect drain to remove accumulated liquid.

l. Protect open hoistways and entrances during construction in accordance with OSHA Regulations 29 CFR Part 1926.

m. Protect car enclosure, hoistway entrance assemblies, and special metal finishes from damage after installation.

n. Hoistway venting or pressurization to prevent accumulation of smoke and gas as required by Local Building Code.

o. Seal fireproofing to prevent flaking.

2. Machine Room, Control Room and Machinery Spaces:

a. Provide enclosure with access.

b. Self-closing and locking access door.

c. Provide self-closing and locking access door with panic door hardware.

d. Ventilation and heating:

1) Minimum temperature: Maintain minimum temperature of 55 degrees F.

2) Maximum temperature: Maintain maximum temperature of 90 degrees F.

3) Maintain maximum 80 percent relative humidity, non-condensing.

e. Paint walls, ceiling, and floor.

f. Class ABC fire extinguisher.

g. Seal fireproofing to prevent flaking.

h. Fire sprinklers as required by code.

i. Only conduit, wiring, and equipment directly related to the hydraulic elevator allowed in elevator machine rooms.

3. Electrical Service, Conductors, and Devices:

a. Provide lighting and Ground Fault Circuit Interrupter (GFCI) convenience outlets in pit, machine room, and overhead machinery space.

b. Provide conduit from elevator controller to fire alarm system interface in/near the elevator machine room. Coordinate size, number, and location of conduits.

c. Provide three-phase mainline copper power feeder to terminals of each elevator controller in the machine room with protected, lockable OPEN, disconnect switch.

d. Provide single-phase copper power feeder to each elevator controller for car lighting and exhaust blower with individual protected, lockable OFF, disconnect switch.

e. See Section 28 31 00 - Fire Detection and Alarm for fire detection and fire recall.

f. Provide temporary power and illumination to install, test, and adjust elevator equipment.

g. Provide means to manually and automatically disconnect power to affected elevator drive unit and controller prior to activation of machine room overhead fire sprinkler system, and/or hoistway overhead fire sprinkler system. Locate manual shut-off means outside bounds of machine room.

h. When sprinklers are provided in the hoistway, identify all electrical equipment, except seismic protective devices, located less than 4 feet 0 inch above the pit floor for use in wet locations. (ANSI/NFPA 70).

i. Provide power feeders to main control console and firefighters' control panel.

j. Provide power feeder to elevator Public Address (PA) amplifier in the elevator machine room.

k. Provide single-phase power feeders to machine room elevator group control monitor with single-phase, protected, lockable OFF, disconnect switch.

4. Standby Power Provision:

a. Standby power of the same voltage characteristics via normal electrical feeder to run all elevators at full-rated car speed and capacity.

b. Conductor from auxiliary form “C” dry contacts, located in the standby power transfer switch to a designated elevator control panel in each elevator group and/or single elevator unit. Provide time delay of 30-45 seconds for pre-transfer signal in both directions.

c. Standby single-phase power to group controller, and each elevator controller for lighting, exhaust blower, emergency call bell, intercom amplifier, and hoist machine cooling fan.

d. Means for absorbing regenerated power during an overhauling load condition, in accordance with NEC 650-101. Elevator shall employ SCR IBGT drive, presenting a non-linear active load.

e. Provide elevator machine room ventilation or air conditioning per code.to function within the temperature range established by the elevator equipment manufacturer including during standby power modes.

C. Equipment furnished by Sound Transit, installed under this Section:

1. Network Switch.

D. This Section incorporates by reference the latest revisions of the following documents:

1. American Society of Mechanical Engineers (ASME):

a. ASME A17.1 National Safety Code for Elevators and Escalators.

b. ASME A17.2.2 Guide for Inspection of Elevators, Escalators, and Moving Walks.

c. ASME A17.5 Elevator and Escalator Electrical Equipment.

2. American Society of Testing and Materials International (ASTM):

a. ASTM A36 Standard Specification for Carbon Structural Steel.

b. ASTM A167 Standard Specification for Stainless and Heat-Resisting Chromium-Nickel Steel Plate, Sheet, and Strip.

c. ASTM A568 Standard Specification for Steel, Sheet, Carbon, and High-Strength, Low-Alloy, Hot-Rolled and Cold-Rolled, General Requirements.

d. ASTM A1008 Standard Specification for Steel, Sheet, Cold-Rolled, Carbon, Structural, High-Strength Low-Alloy and High-Strength Low-Alloy with Improved Formability, Required Hardness, Solution Hardened, and Bake Hardenable.

e. ASTM A1011 Standard Specifications for Steel, Sheet and Strip, Hot-Rolled, Carbon, Structural, High-Strength Low-Alloy with Improved Formability.

f. ASTM B209 Standard Specification for Aluminum and Aluminum-Alloy Sheet and Plate.

g. ASTM B221 Standard Specification for Aluminum and Aluminum-Alloy Extruded Bars, Rods, Wire, Profiles and Tubes.

3. National Fire Protection Association (NFPA):

a. NFPA No. 70 National Electrical Code.

b. NFPA No. 72 National Fire Alarm Code.

c. NFPA No. 101 Life Safety Code.

d. NFPA No. 130 Standard for Fixed Guideway Transit and Passenger Rail Systems.

4. Federal Standard and NAAMM nomenclature.

5. International Code Council (ICC):

a. International Building Code (IBC) – Applicable to Projects Not Located Within Seattle.

b. IBC Chapter 30 Elevators and Conveying Systems.

6. Institute of Electrical and Electronics Engineers, Inc. (IEEE):

a. IEEE 446 IEEE Recommended Practice for Emergency and Standby Power Systems for Industrial and Commercial Application.

7. American National Standards Institute (ANSI):

a. ANSI Z97.1 Safety and Glazing Materials used in Building Safety.

8. Telecommunications Industry Association (TIA):

a. TIA-568-C.0 Generic Telecommunications Cabling for Customer Premises.

9. Consumer Product and Safety Commission (CPSC):

a. CPSC 16 CRF Part 1201 Safety Standard for Architectural Glazing Materials.

10. Washington Administrative Code (WAC).

11. Occupational Safety & Health Administration (OSHA):

    a. 29 CFR Part 1926, Safety and Health Regulations for Construction.

12. Americans with Disabilities Act of 1990 (ADA):

    a. ADA Accessibility Guidelines (ADAAG).

    b. Code Amendments from local AHJ's including but not limited to; Seattle Building Code (SBC) – Applicable to Projects Located Within Seattle.

    c. SBC Chapter 30 Elevators and Conveying Systems.

13. American National Standards Institute (ANSI):

    a. ANSI Z97.1 American National Standard for Safety Glazing Materials Used in Buildings.

14. Federal Communications Commission (FCC):

    a. EMI Shielding Guidelines.

15. American Welding Society, Inc. (AWS):

    a. AWS A2.4 Standard Symbols for Welding, Brazing, and Nondestructive Examination.

    b. AWS D1.1/D1.1M Structural Welding Code – Steel.

16. International Standards Organization (ISO):

    a. ISO 281-1:1997 Rolling Bearings Dynamic Load Ratings and Rating Life.

E. Definitions:

1. Terms used are defined in the latest edition of the Safety Code for Elevators and Escalators, ASME A17.1.

2. Reference to a device or a part of the equipment applies to the number of devices or parts required to complete the installation.

1.02 SUBMITTALS

A. Pre-revenue Warranty Maintenance Plan:

1. Submit a detailed Pre-revenue Warranty Maintenance Plan.

B. Shop Drawings: Scaled and Fully Dimensioned Layout that includes plans of pit, hoistway, and machine room indicating equipment arrangement, elevation section of hoistway, details of car enclosures, hoistway entrances, and car/hall signal fixtures:

1. Indicate equipment lists, reactions, and design information on layouts.

2. Power Confirmation Sheets: Include motor horsepower, code letter, starting current, full-load running current, and demand factor for applicable motors.

3. Complete control and schematic wiring diagram of the elevator system and subsystems.

4. Elevator controller, including manufacturer's technical data and product data, and interface hardware and software requirements.

5. Within 60 days after Notice to Proceed and before beginning equipment fabrication, submit shop drawings and required material for review.

C. Testing Submittals:

1. Submit fiber optic performance test procedure and results.

D. Product data for Special Elevator Equipment: Submit product catalogs for speakers, cameras, intercom/emergency telephone, Ethernet switch, traveling cable data cables, card reader and door controllers.

E. The Contractor shall submit material safety data and product data sheets for all products used by the Contractor at the site or which may need to be replaced or added to by the maintenance personnel. Such products include but are not limited to greases, oils and paint. The sheets shall have an index listing each product along with application method, approximate quantity required of the product and the component the product is associated with.

F. Finish Material: Submit 3-inch by 12-inch samples of actual finished material for review of color, pattern, and texture of exposed finishes. Compliance with other requirements is the exclusive responsibility of the Contractor.

G. Operation and Maintenance Manuals:

1. In addition to the requirements stated elsewhere in the Contract Documents, include the following as minimums:

a. Printed Instructions explaining all operating features.

b. Complete installation, maintenance, adjustment, removal, and testing instructions and procedures for all elevator equipment and components. All instructions shall be at the adjuster's level and specific to the equipment installed:

1) Include inspection and maintenance standards including wear limits, settings and tolerances.

c. Wiring Diagrams: Include a complete set within each Operation and Maintenance Manual, as well as three individually printed and bound complete sets, of as-installed straight-line wiring diagrams showing the electrical connections of all equipment and all modifications to control circuits, including wiring of safety devices. Furnish a legend sheet with each set of drawings to provide the following information:

1) Name and symbol of each relay, switch, or other apparatus.

2) Location on drawings, drawing sheet number and area, and location of all contacts.

3) Location of apparatus, whether on controller or on car.

4) Sequence of operation of apparatus connected with each elevator.

d. Complete software documentation for all installed equipment, including software updates and or revisions during the progress of the work.

e. Lubricating instructions and schedule, including recommended grade of lubricants.

f. Hoistway cleaning procedures required to meet sign off requirements of L&I.

g. List of Special Tools required for inspection, adjustment, maintenance, repair and testing. Provide special tools to Sound Transit. Special tools shall be the property of Sound Transit and kept in the elevator machine room at all times when not in use.

h. List of recommended spare parts and stock quantities for routine maintenance of the equipment. Include a list of spare parts considered critical and for which long lead time frames (items no available within 48 hours) for acquisition would result in extended equipment down-time.

i. Parts Catalog: Complete parts catalogs listing all replaceable parts including Manufacturer's identifying numbers, current unit price and ordering instructions. Include the complete parts catalog in each Operation and Maintenance Manual, as well as three separate complete printed sets.

j. The Operation and Maintenance Manual shall contain only information related to the equipment installed. Generic information not relevant to the installed equipment shall not be included.

H. Special Tools

1. Provide a complete set of special tools and instruments necessary for troubleshooting and making all adjustments on every part of the elevator installation. Any tools that are designed specifically for tasks associated with elevator inspection, maintenance and repair or that are required for these tasks, are special tools.

2. Diagnostic equipment: Provide all diagnostic test devices complete with instructions, access codes, adjusters' manuals and set-up manuals for adjustment, diagnosis and troubleshooting of elevator system, and performance of routine safety tests.

3. Storage cabinet: Provide and install a lockable metal cabinet in each elevator machine room of suitable size for the storage of special tools and necessary spare parts. Cabinet shall be mounted on legs or a pedestal a minimum of 4 inches off the floor. Cabinet to be keyed to Sound Transit standard keying system.

I. Four sets of neatly tagged keys for all switches and control features properly tagged and marked.

1.03 QUALITY ASSURANCE

A. Comply with most stringent applicable provisions of following Code and/or Authority, including revisions and changes in effect on date of these Specifications:

1. Safety Code for Elevators and Escalators, ASME A17.1

2. Inspectors' Manual, ASME A17.2.1.

3. Elevator and Escalator Electrical Equipment, ASME A17.5.

4. National Electrical Code, NFPA 70.

5. Americans with Disabilities Act (ADA).

6. Local fire jurisdiction.

7. Requirements of SBC with local municipality amendments and all other Codes, Ordinances and Laws within the governing jurisdiction.

8. Life Safety Code, NFPA 101.

9. Washington Administrative Code (WAC).

1.04 DELIVERY, STORAGE, AND HANDLING

A. Deliver material in Manufacturer's original, unopened protective packaging.

B. Store material in original protective packaging. Prevent soiling, physical damage, or moisture damage.

C. Protect equipment and exposed finishes from damage and stains during transportation, erection, and construction.

1.05 WARRANTY MAINTENANCE

A. Pre-revenue Warranty Maintenance:

1. Provide full-service Warranty Maintenance as described in this section. This period shall commence upon installation and extend to the start of Revenue Service:

a. Full-service maintenance shall include standard monthly maintenance, replacement parts, and annual testing.

2. Document completed monthly maintenance during warranty within the installer-provided Maintenance Control Program (MCP) that is kept at all times within the elevator machine room.

3. Provide preventive maintenance, as recommended by the manufacturer and in accordance with all applicable codes, during normal working hours. Systematically examine, adjust, clean, and lubricate equipment, parts, components, and subsystems. Repair or replace defective parts using parts produced by the manufacturer of installed equipment. Maintain elevator machine room, hoistway, and pit in clean condition.

4. Defective is defined to include, but not to be limited to; operation or control system failures, performance below required minimum, excessive wear, unusual deterioration or aging of materials or finishes, unsafe conditions, the need for excessive maintenance, abnormal noise or vibration, and similar unsatisfactory conditions.

5. Exercise each elevator during monthly maintenance visits and document in the MCP. Exercising of equipment shall consist of continuous operation through entire run of hoistway for one hour.

6. All warranty and maintenance work shall be performed by a company that has a current code compliant Maintenance Control Program (MCP) on file with L & I. Warranty maintenance shall meet the MCP criteria as outlined in ASME A17.1 as well as all manufacturer's recommended maintenance.

7. Equipment Manufacturer is responsible for upgrades and revisions of software and documentation of associated revision to the Operations and Maintenance Manual.

8. The Contractor shall document all maintenance and transmit maintenance records to Sound Transit.

B. Extended Warranty Maintenance:

1. Provide Extended Warranty Maintenance for a five-year period commencing at the start of Revenue Service, per Appendix A “Extended Maintenance Services Scope of Work” and as generally described below.

2. Provide full-service preventive maintenance as recommended by the manufacturer and in accordance with all applicable codes, and 24-hour emergency callback service. Systematically examine, adjust, clean, and lubricate equipment, parts, components, and subsystems. Repair or replace parts as necessary using parts produced by the manufacturer of installed equipment. Maintain elevator machine room, hoistway, and pit in clean condition.

3. 24-hour emergency callback service shall comply with the following response times:

a. Service requests placed between 6:00am and 6:00pm: 1 hour.

b. Service requests other hours, weekends, and holidays: 2 hours.

4. Removal of units from beneficial usage for maintenance purposes shall be coordinated with and approved by Sound Transit, unless removal is necessitated for emergency repair or adjustment. Normal preventive maintenance service shall be performed during off-peak operating hours.

5. All units shall be available for use an average of 98.7 percent of property hours of operation over each three-month period during Extended Warranty Maintenance service. This includes allowance for equipment out of service time as the result of callbacks, scheduled preventive maintenance, and repairs. Contractor’s failure to meet this unit availability provision for two consecutive three-month periods for any single elevator or escalator, or group of units, shall trigger an automatic maintenance audit by Sound Transit. Contractor agrees to expeditiously take corrective action in regard to identified deficiencies. Further, Contractor acknowledges Sound Transit’s right to pass cost of said audit to Contractor.

6. All warranty and maintenance work shall be performed by a company that has a current code compliant Maintenance Control Program (MCP) on file with L & I.

7. Equipment Manufacturer is responsible for upgrades and revisions of software and documentation of associated revision to the Operations and Maintenance Manual.

1.06 PERMIT, TEST AND INSPECTION

A. Obtain and pay for permit, license, and inspection fee necessary to complete the installation. Installation will be considered complete when the governing authority of Washington State Department of Labor and Industries has issued a permanent operating permit for each elevator.

B. Perform tests required by the elevator Section of the Washington State Department of Labor and Industries. Perform tests in accordance with procedures described in ASME A17.2.1 inspector’s manual for Electric Elevators and as required by the authorities having jurisdiction in the presence of the Resident Engineer.

C. Contractor is not relieved from furnishing and installing work shown or specified which may be beyond requirements of ordinances, laws, regulations or codes.

PART 2 - PRODUCTS

2.01 MANUFACTURERS

A. Approved Manufacturers:

1. Installers: KONE, Otis, Schindler, TK Elevator or Mid-American or approved equal- must be reviewed and approved by Sound Transit and meet APTA grade requirements.

2. Gearless Machines: Manufacturers standard- KONE, Otis, Schindler, TK Elevator or Mid-American or approved equal- must be reviewed and approved by Sound Transit and meet APTA grade requirements.

3. Control Manufacturers: KONE, Otis, Schindler, TK Elevator or Mid-American or approved equal- must be reviewed and approved by Sound Transit and meet APTA grade requirements.

4. Car Enclosure: KONE, Otis, Schindler, TK Elevator or Mid-American or approved equal- must be reviewed and approved by Sound Transit and meet APTA grade requirements.

5. Hoistway Entrance: KONE, Otis, Schindler, TK Elevator or Mid-American or approved equal- must be reviewed and approved by Sound Transit and meet APTA grade requirements.

2.02 MATERIALS

A. Steel:

1. Sheet Steel (Furniture Steel for Exposed Work): Stretcher-leveled, cold-rolled, commercial quality carbon steel, complying with ASTM A1008, matte finish.

2. Sheet Steel (for Unexposed Work): Hot-rolled, commercial quality carbon steel, pickled and oiled, complying with ASTM A568 and A1011.

3. Structural Steel Shapes and Plates: ASTM A36.

B. Stainless Steel: Type 316 complying with ASTM A167, with standard tempers and hardness required for fabrication, strength and durability. Apply mechanical finish on fabricated work in the locations shown or specified (Federal Standard and NAAMM nomenclature) with texture and reflectivity required to match Resident Engineer's sample. Protect with adhesive-paper covering:

1. Non-directional orbital uniform finish: 80 grit orbital sanding over standard mill plate or shape to produce a uniform non-directional satin finish with 90 percent of mill marks removed to match Resident Engineers visual sample.

C. Aluminum: Extrusions conforming to ASTM B221. Sheet and plate conforming to ASTM B209.

D. Nickel Silver: Extrusions conforming to ASTM B151/151M.

E. Paint: Clean exposed metal of oil, grease, scale, and other foreign matter and factory paint one shop coat of Manufacturer's standard rust-resistant primer. After erection, provide one finish coat of industrial enamel paint. Galvanized metal need not be painted. See Section 09 96 00 - High Performance Coatings.

F. Prime Finish: Clean all surfaces receiving a baked enamel paint finish of oil, grease, and scale. Apply one coat of rust-resistant mineral paint followed by a filler coat over uneven surfaces. Sand smooth and apply final coat of mineral paint.

G. Baked Enamel Finish: Prime finish in accordance with Article 2.02E above. Apply and bake two additional coats of enamel in the selected solid color.

H. Glass: Laminated safety glass, minimum 9/16 inch thick, conforming to ANSI Z97.1 and CPSC 16 CFR Part 1201 and Contract Specifications Section 08 80 00 - Glazing, Article 2.01.

2.03 EQUIPMENT

A. Equipment shall be the same for all contracts except where specifically noted. Where variations occur, each contract shall be specified separately.

B. Elevator Features:

1. Number:

a. As specified and as detailed on the Issued for Construction Drawings.

2. Capacity and Loading Classification:

a. As specified and as detailed on the Issued for Construction Drawings.

3. Speed:

a. Rises greater than 50 feet: 350 feet per minute (fpm).

b. Rises 50 feet or less: 200 feet per minute (fpm).

4. Roping: Manufacturer's standard roping configuration per Issued for Construction Drawings.

5. Supervisory Control: Selective collective, microprocessor-based system, non-proprietary.

6. Motor Control: Variable voltage variable frequency (VVVF), microprocessor based with digital closed loop feedback and automatic stopping.

7. Power Characteristics: 480 volts, 3 phase, 60 hertz.

8. Stops and Openings: As detailed on the Issued for Construction Drawings.

9. Floors Served: As detailed on the Issued for Construction Drawings.

10. Travel: As detailed on the Issued for Construction Drawings.

11. Minimum Clear Inside Car:

a. Geometry Type A: 5 feet 8 inches wide by 7 feet 10 inches deep.

b. Geometry Type B: 7 feet 8 inches wide by 5 feet 3 inches deep.

12. Entrance Size: 4 feet 0 inches wide by 7 feet 0 inches high.

13. Entrance Type: As detailed on the Issued for Construction Drawings.

14. Door Operation: High speed, heavy duty, door operator, minimum opening speed 2.5 feet per second (fps).

15. Door Protection: Infrared, full screen device, with differential timing and nudging and interrupted beam time.

16. Machine: Gearless.

17. Machine Location: As specified and detailed in Issued for Construction Drawings.

18. Safety: Flexible guide clamp - Type B, car only.

19. Guide Rails: Planed steel tees.

20. Buffers: Oil for speeds above 200 fpm, springs or equivalent for speeds that do not exceed 200 fpm.

21. Car Enclosure: As specified and as detailed on the Issued for Construction Drawings. Car ceiling height of 8 feet.

22. Signal Fixtures: Vandal resistant assembly.

23. Registration Lights: Single hall pushbutton riser at each opening. Vandal resistant car and hall pushbuttons:

    a. Hall buttons and control devices shall be NEMA 4.

24. Car Position Indicator: Dual digital with direction arrows.

25. Firefighters' elevator control panel located in Fire Command Center and remote wiring for tunnel stations or where required by local AHJ.

26. Hall Lanterns: At all floors with volume adjustable electronic chime or tone. Sound twice for down direction. Vandal resistant:

    a. Hall lanterns shall be in NEMA 4 enclosures at all locations.

27. Hoistway wiring, conduit and enclosures shall be rated for wet locations.

28. Additional Features:

    a. Roller guides.

    b. Car top inspection station.

    c. Guardrails at car top to meet code requirements for safety.

    d. Firefighters' service, including alternate floor return feature.

    e. Standby power transfer (automatic to main floor) with manual override in fire control panel.

    f. Battery return device if emergency power is not provided per construction documents.

    g. Accessibility and emergency medical services access and signage.

    h. Hinged car return panels arranged for integral car operating panels.

    i. Hoistway access switches.

    j. Hoistway door unlocking device all floors with keyed escutcheon plugs.

    k. Independent service feature.

l. Platform isolation.

m. Load weighing device.

n. Anti-nuisance feature.

o. Tamper resistant fasteners for signal fixture faceplates.

p. Sill support angles.

q. Machine, power conversion unit, and controller sound isolation.

r. Seismic devices in accordance with ASME A17.1, Section 2400.

s. Pad hooks and vinyl-covered pads.

t. Battery pack emergency car lighting. Provide separate constant pressure test button in car service compartment. Illuminate portion of normal car lighting.

u. Signage engraving filled with black paint or approved etching process.

v. Etched stainless steel support signs, interior cab only.

1) Material: Stainless steel, etched copy and icon. Attached to interior elevator walls with VHB and silicone.

2) Thickness: 1/8 inch thick with eased edges.

3) Size: 3-inch x 1-1/4-inch.

4) Braille message: Stainless steel braille beads applied below 1/32-inch raised copy and Grade II braille.

5) Color: Reverse etched stainless steel, negative space is painted black.

w. No visible company name or logo on any equipment viewable by passengers.

x. Auxiliary car operating panel for dual entry elevators.

y. Wiring diagrams, operating instructions, and parts ordering information.

z. System Diagnostic Equipment and instructions: The elevator installation shall be a design that can be maintainable by any licensed elevator maintenance company employing journeymen mechanics, without the need to purchase or lease additional diagnostic devices, special tools, or instructions from the original equipment manufacturer:

1) Provide onsite capability to diagnose faults to the level of individual circuit boards and individual discreet components for the solid-state elevator controller.

2) If the equipment for fault diagnosis is not completely self-contained within the controllers but requires a separate, detachable device, that device shall be furnished to Sound Transit as part of this installation. Such device shall be in possession of and become property of Sound Transit:

a) Installed equipment not meeting this requirement shall be removed and replaced with conforming equipment at no cost to Sound Transit.

aa. Non-proprietary control system and diagnostics provisions.

bb. L&I Elevator Access Box: High Security Fire Key Box by Quality Elevator Products, Inc. Model SKB-2011 or approved equal. Color: Stainless steel #4 finish cover. Custom Label: “ELEVATOR”. Provide Department of Labor & Industries elevator key cylinder. Locate box as shown on drawings. Refer to Architectural drawings for location.

cc. Firefighters' Key Box: Knox-Box Elevator Key Box 1400 Series recessed mount and recessed mounting kit or approved equal. Color: Red. Engrave instructions for use on cover in accordance with Local Fire Authority requirements. Locate box as shown on drawings. Refer to Architectural drawings for location.

dd. Keys for elevator access and car operating panel in the machine room.

C. Car, General:

1. Car Speed: Plus or minus 3 percent of Contract speed under all loading conditions.

2. Car Capacity: Safely lower, stop and hold 125 percent of rated load.

3. Car Stopping Zone: Plus or minus 1/4 inch under all loading conditions.

4. Door Opening Time:

a. Two speed, side opening: 2.7 seconds from start of opening to fully open.

b. Single speed center opening: 1.8 seconds from start of opening to fully open.

5. Door Closing Time:

a. Two speed side opening: 4.5 seconds from start of closing to fully closed.

b. Single speed center opening: 2.8 seconds form start of closing to fully closed.

6. Car Ride Quality:

a. Horizontal acceleration within car during all riding and door operating conditions. Not more than 20 mg peak to peak in the 1-10 Hertz range.

b. Acceleration and Deceleration: Smooth constant and not more than 5 feet/second/second with an initial ramp between 0.5 and 0.75 second.

c. Sustained Jerk: Not more than 8 feet/second/second/second.

7. Airborne Noise: Measured noise level of elevator equipment during operation shall not exceed 50 decibels (dBA) in elevator lobbies. Noise Level in cab shall not exceed 55 dBA for continuous noise or 60 dBA for intermittent noise.

a. Take all dBA readings 5 feet off the floor and 1 foot or more from wall.

D. Car Equipment:

1. Frame: Welded or bolted, rolled or formed steel channel construction to meet load classification requirements.

2. Safety Device: Type B, flexible guide clamp.

3. Platform: Stainless steel frame with ¼ inch stainless steel deck. Design and construct to accommodate load classification requirements. Wood construction not permitted.

4. Guide Shoes: Roller type with three or more spring-dampened, sound-deadening rollers per shoe. Minimum roller diameter 6 inches.

5. Finish Floor Covering: Resin Epoxy flooring: seamless, flexible, resilient flooring system with high solids with colored rubber chips in a troweled mortar system. 1/4-inch thickness. “SofTop” Decorative Flooring by Sherwin Williams or approved equal, with “Shark-Grip” Slip Resistant additive. Color as selected by Resident Engineer from manufacturer’s standard.

6. Sills: Extruded stainless steel without extruded extension between car entrance columns to face of car front return. Cast-in-place concrete between sill and tactile warning surface.

7. Toe Guard: Minimum 14-gauge stainless steel reinforced and braced to car platform, with flat black finish.

8. Doors: Provide as specified for hoistway entrance doors.

9. Finger Guard: Brush type to prevent entrapment during door opening. Provide complete with cover plate to conceal fixings and coordinate with surrounding finishes.

10. Door Hangers: Two-point hanger roller with neoprene roller surface and suspension with eccentric upthrust roller adjustment.

11. Door Track: Bar or formed, cold-drawn removable steel track with smooth roller contact surface.

12. Door Header: Construct of minimum 12-gauge steel, shape to provide stiffening flanges.

13. Door Electrical Contact: Prohibit car operation unless car door is closed within tolerance allowed by Code.

14. Door Clutch: Heavy-duty clutch, linkage arms, drive blocks, and pickup rollers or cams to provide positive, smooth, quiet door operation. Design clutch so car doors can be closed while hoistway doors remain open.

15. Restricted Opening Device: Restrict opening of car doors outside the unlocking zone.

16. Door Operator: High speed, heavy-duty master door operator capable of opening doors at no less than 2.5 fps. Accomplish reversal in no more than 2 and 1/2 inches of door movement. Open doors automatically when car arrives at a floor. Provide solid state door control with closed loop circuitry to constantly monitor and automatically adjust door operation based upon velocity, position, and motor current. Maintain consistent, quiet, and smooth door operation at all floors regardless of door weight or varying air pressure up to 0.5-inch W.C. Basis of Design: GAL MOVFR or approved equal.

17. Door Control Device:

a. 3D Infrared Reopening Device: Must meet ASME A.17.1-2019

b. Black, fully enclosed device with full screen infrared matrix or multiple beams extending vertically along leading edge of each door panel to minimum height of 7 feet – 0 inches above finished floor. Device shall prevent doors from closing and reverse doors at normal opening speed if beams are obstructed while doors are closing, except during nudging operation. In event of device failure, provide for automatic shutdown of car at floor level with doors open.

c. Nudging Operation: After beams of door control device are obstructed for a predetermined time interval (minimum 20.0 to 25.0 seconds), warning signal shall sound and doors shall attempt to close with a maximum of 2.5 foot-pounds kinetic energy. Activation of the door open button shall override the nudging operation and re-open the doors.

d. Interrupted Beam Time: When beams are interrupted during initial door opening, hold door open a minimum of 3.0 seconds. When beams are interrupted after the initial 3.0-second hold open time, reduce time doors remain open to an adjustable time of approximately 1.0 to 1.5 seconds after beams are reestablished.

e. Differential Door Time: Provide separately adjustable timers to vary time that doors remain open after stopping in response to calls.

1) Car Call: Hold open time adjustable between 3.0 and 5.0 seconds.

2) Hall Call: Hold open time adjustable between 5.0 and 8.0 seconds. Use extended hall call time when car responds to coincidental calls.

18. Car Operating Panel:

a. One car operating panel without faceplate consisting of a stainless-steel box containing the operating vandal resistant fixtures, mounted behind the car enclosure swing return panel(s):

1) Panel shall be located as detailed in the Issued for Construction Drawings and as required by entrance type.

b. Suitably identify vandal resistant assemblies including floor buttons, alarm button, door open button, door close button, and emergency stop switch with SCS, Visionmark or Entrada Cast tactile symbols rear mounted. Provide plates in accordance with Local Accessibility Standards including Braille. Locate operating controls no higher than 48 inches above the car floor; no lower than 35 inches for stop device and alarm button.

c. Provide minimum 3/4-inch diameter raised 1/8 inch with square shoulders or flush floor pushbuttons, which illuminate to indicate call registration. Include 5/8-inch-high designation of the floors served directly to the left of the pushbutton. Provide keyswitches to activate floor pushbuttons at intermediate levels. Platform and surface levels to have pushbutton only:

1) Elevator car call buttons shall indicate floor levels consistent with Sound Transit's standard floor identification as follows:

a) P = Platform Level.

b) M = Mezzanine Level (1, 2, 3, etc.).

c) B = Basement Level (1, 2, 3, etc.).

d) S = Surface Level.

d. Provide alarm button at bottom of car operating panel to ring bell located on car, and sound distress signal at control panel. Illuminate button when activated.

e. Provide keyed stop switch with markings to show run and stop located in locked car service compartment.

f. Provide door open button to stop and reopen closing doors or hold doors in open position. Button operable only while car is stopped at floor regardless of special operational features, except firefighters' service.

g. Provide door close button to activate door close cycle. Cycle shall not begin until normal door dwell time for a car call has expired except firefighters' service.

h. Provide locked Firefighters' Emergency Operation Panel:

1) Openable by the same key which operates the Fire Operation switch.

2) Including the following features:

a) Phase II fire access switch.

b) Firefighters' visual indication.

c) Call cancel button.

d) Stop switch, manually operated.

e) Door open button.

f) Door close button.

g) Floors served.

i. Provide seismic indicator jewel.

j. Provide lockable service compartment with recessed flush door. Door material and finish shall match car return panel or car operating panel faceplate. Door shall contain an integral flush window for displaying the elevator-operating certificate. Inside surface of door shall accommodate mounting provisions for certificate:

1) Include the following controls in lockable service cabinet with function and operating positions identified by engraved letters painted black:

a) Inspection switch.

b) Light switch.

c) 2-speed exhaust blower switch.

d) Independent service switch.

e) Constant pressure test button for battery pack emergency lighting.

f) 120-volt, AC, GFCI protected electrical convenience outlet.

g) Card reader override switch.

h) Stop switch.

k. Provide black paint filled, engraved or approved etched signage with size and style approved by the Resident Engineer as follows:

1) Car number on main car operating panel.

2) “No Smoking” on main car operating panel.

3) Car capacity in pounds on service compartment door.

4) Phase II firefighters’ operating instructions on inside face of firefighters’ compartment door.

5) Engrave filled red “Firefighters’ Operation” on outside face of compartment door.

19. Car Top Control Station: In accordance with Code. Control station shall be provided with GFCI protected outlet and work light; include on/off switch and lamp guard. An additional GFCI receptacle shall be mounted at bottom of car. Mount to provide utilization while standing in an upright position.

E. Car Enclosure:

1. Provide complete car enclosure as specified herein and detailed on the Issued for Construction Drawings. Provide the following features:

a. Shell: Reinforced 14-gauge furniture steel. Apply sound-deadening mastic to exterior.

b. Canopy: Reinforced 14-gauge furniture steel with lockable, hinged emergency exit. Interior finish white reflective baked enamel.

c. Front and Rear Return Panels and Integral Entrance Columns: Reinforced 14-gauge non-directional finish stainless steel. Swing entire unit on substantial pivot points (minimum three) for service access to car operating panel(s). Locate pivot points to provide full swing of front return panel without interference with sidewall finish or handrail. Secure in closed position with concealed three-point latching. Provide service compartment with recessed flush cover and cutouts for operating switches.

d. Transom: Reinforced 14-gauge non-directional finish stainless steel full width of enclosure.

e. Car Door Panels: Minimum reinforced 16-gauge non-directional stainless steel. Same construction as hoistway door panels.

f. Base: Non-directional stainless steel with concealed ventilation cutouts. Cutouts to be protected from penetration by debris or liquids.

g. Interior Wall Finish: Non-directional finish stainless steel on aluminum honeycomb panels. As specified and as indicated. Refer to architectural drawings for details of elevator cab interiors including metal and glass panel installations.

h. Ventilation: Two-speed exhaust blower mounted to car canopy on isolated rubber grommets. Man-D-Tec MVS-AA, Model AA with diffuser and grille, or approved equal.

i. Lighting: Provide minimum average 15 foot-candle illumination at car floor utilizing high output LED fixtures. Provide battery standby power for operation. Provide fixtures with wiring and hookup. Coordinate with emergency lighting requirements. Provide emergency lighting integral with portion of normal car lighting system. Include required transformer:

1) All fixtures shall be above the ceiling and not allow removal without special tools. Fixture replacement shall be able to be performed from within the elevator cab by non-elevator maintenance personnel.

j. Suspended Ceiling: Special design as shown in the Issued for Construction Drawings.

k. Handrails: 1-1/2-inch diameter stainless steel tubes.

F. Operation:

1. Simplex Automatic for single elevators, Selective Collective for elevators located in groups:

a. Approved microprocessor-based car and motion control systems as follows including, as a minimum, the features described hereafter:

1) KONE KCM.

2) MCE Motion 4000.

3) Schindler Miconic.

4) Otis Elevonic.

5) Thyssenkrupp TAC 32T.

6) Smartrise.

7) Elevator Controls Corp. Pixel.

b. Register service calls on cars from pushbuttons located at each floor and in each car. Slow down, and automatically stop cars at landings corresponding to registered calls. Make stops at successive floors for each direction of travel irrespective of order in which calls are registered.

c. Use easily re-programmable system software.

d. Required Features:

1) Position Sensing: Reset car position when passing or stopping at each landing.

2) Hall Pushbutton Failure: Multiple power sources and separate fusing for pushbutton risers.

3) Duplicate communication link; all individual car computers.

2. Other Items:

a. Load Weighing: Provide means for weighing car passenger load. Design control system to provide dispatching at main floor in advance of normal intervals when car fills to capacity. Provide hall call by-pass when the car is filled to preset percentage of rated capacity and traveling in down direction. (Field adjustment range: 10 percent to 100 percent.)

b. Anti-Nuisance Feature: If car loading relative to weight is not commensurate with registered car calls, cancel car calls. Systems employing either load weighing or door protective device for activation of this feature are acceptable.

c. Independent Service: Provide controls for operation of each car from its pushbuttons only. Close doors by constant pressure on desired destination floor button or door close button. Open doors automatically upon arrival at selected floor.

d. Elevator Remote Disable: During non-revenue hours, public access to and use of the elevators shall be restricted. Control systems shall permit the Link Control Center (LCC) to shut down elevator usage during non-revenue hours and enable operation during revenue hours.

e. Car-to-Street or Lobby Feature: Provide the means for automatic return to the Street or Lobby level. Return car nonstop after answering pre-registered car calls, and park with doors open until the car is returned to normal operation.

f. Firefighters' Service: Provide equipment and operation in accordance with Code requirements.

g. Automatic Car Stopping Zone: Stop car within 1/4 inch above or below the landing sill. Avoid over-travel or under-travel, and maintain stopping accuracy regardless of load in car, direction of travel, distance between landings, and rope slippage or stretch.

h. Motion Control: Microprocessor based AC variable-voltage, variable frequency with digitally encoded closed-loop velocity feedback suitable for operation specified and capable of providing smooth, comfortable car acceleration, retardation, and dynamic braking. Limit the difference in car speed between full load and no load to not more than plus or minus 3 percent of the Contract speed.

i. Door Operation: Automatically open doors when car arrives at main floor whether car call has been registered or not.

j. Standby Lighting and Alarm: Car mounted battery unit with solid-state charger to operate alarm bell and car emergency lighting. The Battery shall be rechargeable with a minimum five-year life expectancy. Coordinate the location of light fixture with the Resident Engineer. Provide constant-pressure test button in service compartment of car operating panel.

k. Automatic Light and Fan Shut Down: The control system shall evaluate the system activity and automatically turn off the cab lighting and ventilation fan during periods of inactivity. The settings shall be field programmable.

l. Standby Power Transfer: Upon loss of normal power, adequate standby power shall be supplied via the normal electrical feeders to simultaneously start and run all single cars at rated car speed and load:

1) Automatically return cars nonstop to designated floor, open doors for approximately 3.0 seconds, close doors, and park out-of-service. During return operation, car and hall call pushbuttons shall be rendered inoperative. When all cars have returned to the designated floor, all cars shall be designated for automatic operation.

2) Provide separate key-operated selector switch in the firefighters' control panel.

3) Switch labeled STANDBY POWER OVERRIDE with positions marked AUTO and appropriate car numbers. Key shall be same as that used for firefighters' Phase I and II switch, key removable in AUTO position only.

4) Switch shall override automatic return and automatic selection functions and shall cause the manually selected car to operate. Manual selection shall cause car to start and proceed to designated floor and open and close its doors before stand-by power is transferred to the next selected car.

5) Provide STANDBY POWER indicator lights (one per car) in firefighters' control panel. Indicator light illuminates only when corresponding car is selected to automatically or manually operate on standby power.

m. Seismic Operations and Equipment:

1) Provide design, components and operation in accordance with governing code. Provide dual counterweight derailment sensing wires vertically each side of counterweight the entire height of travel. The counterweight frame shall be equipped with four derailment rings. A dual axis seismic switch shall be provided that will activate at no less than 0.15 times gravity in the vertical or horizontal directions. A minimum of one seismic switch shall be provided per single or group of elevators. Counterweight retainer plates shall be bolted; welded plates are not acceptable.

n. Sump High Water Sensor:

1) Provide sump with water sensor tied to a remote alarm and the Building Management System (except for ST Garages as there is no BMS connection at garages) to notify LCC if water has exceeded capacity of sump.

o. Ascending Car Overspeed Protective Device:

1) Provide a device designed to prevent an ascending elevator from striking the hoistway overhead structure. The device shall

decelerate the car with any load up to the rated capacity by applying an emergency brake:

a) The device shall detect an ascending car overspeed condition of not greater than 10 percent higher than the speed that the car governor is set to trip.

b) The device, when activated, shall prevent operation of the car until the device is manually set.

c) The device shall meet the requirements of current code for safety per the WAC.

p. Unintended Car Movement Protective Device:

1) Provide a device to prevent unintended car movement away from the landing when the hoistway doors are not in the closed and locked position and the car doors are not in the closed position:

a) The device shall prevent such movement in the event of failure of the electric driving machine motor, brake, coupling, shaft or gearing, control system, and any other component upon which the speed of the car depends, except the suspension ropes and the drive sheave of the traction machine.

b) The device, when activated, shall prevent operation of the car until the device is manually reset.

c) The device shall meet the requirements of current code for safety per the WAC.

G. Elevator Machine Equipment:

1. Arrange equipment in spaces shown on Issued for Construction Drawings.

2. Gearless Traction Hoist Machine:

a. Traction, gearless type with AC induction or P.M.S.M. ACV^{3}F motor, primary and emergency brakes, drive shaft, and deflector sheave, mounted in proper alignment on an isolated bedplate. Provide bedplate blocking, secondary or deflector sheave frames and overhead beams/sheaves as required by hoist machine location. Provide all standard equipment. Provide the following optional equipment:

1) Brake switch.

2) Sheave guard.

3) Machine bedplate.

4) Foundation bolts and pipe spacers.

5) Manual brake release.

6) VVVF-AC Hoist Motor.

3. Solid State Power Conversion and Regulation Unit:

a. Design unit to limit current, suppress noise, and prevent transient voltage feedback into building power supply. Provide internal heat sink cooling fans for the power drive portion of the converter panels. Conform to recommended practice for Emergency and Standby Power Systems for Industrial and Commercial Applications for line harmonics and switching noise.

b. Isolate unit to minimize noise and vibration transmission. Provide isolation transformers, filter networks, and choke inductors.

c. Suppress solid-state converter noises, radio frequency interference, and eliminate regenerative voltage transients induced into the mainline feeders or the building standby power generator.

d. Supplement direct-current power for the operation of hoist machine brake, door operator, dispatch processor, and signal fixtures from separate static power supply.

4. Encoder: Direct drive, solid-state, optical, digital type. Update car position at each floor and automatically restore after power loss.

5. Controller: UL/CSA labeled:

a. Compartment: Securely mount all assemblies, power supplies, chassis switches, and relays, on a substantial, self-supporting steel frame. Completely enclose equipment with covers.

b. Relay Design: Magnet operated with contacts of design and material to ensure maximum conductivity, long life and reliable operation without overheating or excessive wear. Provide wiping action and means to prevent sticking due to fusion. Contacts carrying high inductive currents shall be provided with arc deflectors or suppressors.

c. Use of SIL (Safety Integrity Level) rated devices for EPD (Electrical Protective Devices) where possible is preferred to traditional positively opened mechanical switches. These devices shall be listed/certified and labeled/marked to a SIL rating in accordance with the applicable requirements of IEC 61508-2 and IEC 61508-3 with a SIL rating equal to or greater than the SIL indicated for the applicable device shown in ASME A17.1.

d. The detection of a dangerous fault (e.g. with diagnostic tests, proof-tests, or by any other means) in SIL rated electrical/electronic/programmable electronic system (E/E/PES, or commonly referred to as "PES") that can tolerate a single fault shall cause the elevator to revert to a known fail-safe condition. Where necessary, to maintain the integrity of the SIL rated PES and maintain the fail-safe condition prior to a second fault that could lead to a dangerous condition, a manual reset shall be required to remove the SIL rated PES from the fail-safe condition.

e. Microprocessor-Related Hardware:

1) Provide built-in noise suppression devices, which provide a high level of noise immunity on all solid-state hardware and devices.

2) Provide power supplies with noise suppression devices.

3) Isolate inputs from external devices (such as pushbuttons) with isolation modules.

4) Design control circuits so that one side of power supply is grounded.

5) Safety circuits shall not be affected by accidental grounding of any part of the system.

6) System shall automatically restart when power is restored.

7) System memory shall be retained in the event of power failure or disturbance.

8) Equipment shall operate properly with a 500 Kilohertz to 1300-Megahertz radio frequency signal, transmitted at a power level of not less than 100 watts Effective Radiated Power (ERP) at a distance of 3 feet.

9) Provide equipment with Electro Magnetic Interference (EMI) shielding within FCC guidelines.

f. Wiring: CSA labeled copper for factory wiring. Neatly route all wiring interconnections and securely attach wiring connections to studs or terminals.

g. Provide controller or machine mounted auxiliary, lockable “off” disconnect if mainline disconnect not in sight of controller and hoist machine.

h. Permanently mark components (relays, fuses, and PC boards) with symbols shown on wiring diagrams.

i. Provide controller or machine mounted auxiliary, lockable off, disconnect if mainline disconnect not in sight of controller and machine.

6. Sleeves and Guards: 4-inch steel angle guards around cable or duct slots through floor slabs or grating. Provide rope and smoke guards for sheaves, cables, and cable slots in machine room and secondary levels. Provide wire mesh infill barrier between hoistway and machine room openings.

7. Machine and Equipment Support Beams: Provide structural steel beams required for direct support of elevator hoist machine, deflector sheaves, overhead sheaves, governor, and dead-end hitch assemblies:

a. Provide bearing plates, anchors, shelf angles, blocking, and embedments for support and fastening of machine beams or equipment to the building structure.

b. Isolate machine and overhead sheave beams to eliminate noise and vibration transmission to building structure.

c. Provide ladders and platforms with handrails and toeboards for overhead sheave access.

8. Governor: Hoist machine manufacturer’s standard, centrifugal-type, car and counterweight driven, with pull-through jaws and bi-directional electrical shutdown switches. Provide required auxiliary supports for attachment to building structure:

a. Governor shall be remote set/automatic reset type.

9. Vibration Isolation: All elevator equipment provided under this Contract, including power conversion unit, controller and their support, shall be mechanically isolated from the building structure and from electrically induced vibration to minimize the

possibility of objectionable noise and vibrations being transmitted to the car, building structure, or occupied areas of building.

10. Sound Isolation:

    a. Noise level relating to elevator equipment and its operation shall not exceed 55 dBA for continuous noise or 80 dBA for intermittent noise in the machine room and cab.

    b. Take all dBA readings 3 feet off the floor and 3 feet from the equipment in machine room.

    c. Take all dBA readings 5 feet off the floor and 1 foot or more from wall in cab.

11. Connection to Remote Monitoring Interface Terminal Cabinet:

    a. Provide conduit and wiring between the elevator controller and the interface terminal cabinet for remote monitoring and control of each car by the Building Management System. See Drawings for Building Management System Elevator Interface Diagram and I/O Points for Typical Equipment:

        1) Receive the following dry contact inputs to effect the following control actions for each car:

            a) Phase 1 Recall – Primary (from fire alarm panel).

            b) Phase 1 Recall – Alternate (from fire alarm panel)

            c) Access control permissive.

            d) Elevator Remote Disable.

        2) Provide normally open dry contacts for each of the following status items for each car:

            a) Elevator Warning Alarm.

            b) Passenger Alarm Pushbutton.

            c) Phase 1 Fire Operation.

            d) Phase 2 Fire Operation.

            e) Elevator door closed.

            f) Independent Service.

            g) Seismic Operation.

            h) Elevator at floor (one contact per floor).

            i) Standby Power Operation.

    b. Provide conduit and wiring between the hoistway sump, high water sensor and the interface terminal cabinet for remote monitoring by the Building Management System:

1) Provide normally open dry contact for each of the following status items for hoistway:

a) Sump High Water Alarm.

H. Hoistway Equipment:

1. Guide Rails: Minimum 15 pounds per foot or heavier, planed steel T-sections of suitable size and weight for the application, structural support spacing, car weight, counterweight, and seismic reactions, with brackets for attachment to building structure. Provide car rail backing and intermediate counterweight tie brackets to meet Code requirements.

2. Buffers, Car, and Counterweight: Oil type for speeds over 200 fpm with blocking and support channels. Provide switch on buffer to limit car speed if buffer is compressed. Provide buffer access ladder and platform.

3. Sheaves: Machined grooves with sealed bearings. Provide mounting means to machine beams, machine bedplate, and car and counterweight structural members.

4. Counterweight: Steel frame with metal filler weights, guided by 5-inch roller guide shoes.

5. Counterweight Guard: Metal guard in pit.

6. Governor Rope Pit-Tensioning Sheave: Mount sheave and frame on pit floor support frame or guide rail. Provide with guides or pivot point to enable free vertical movement and proper tension of cable/tape.

7. Hoist and Governor Ropes:

a. Hoist rope shall be 8 by 19 or 8 by 25 Seale construction, traction steel type. Fasten with staggered length, adjustable, spring isolated shackles.

b. Governor rope to suit manufacturer's specification.

8. Terminal Stopping: Provide normal, final and emergency terminal speed limiting devices. Provide ability to bypass final limit while in inspection mode on car to properly access and maintain the overhead sheaves, beams and governor for Elevators. There will be no secondary platforms or access panels provided for service to the overhead area.

9. Copper Electrical Wiring and Wiring Connections:

a. Conductors and Connections: Copper throughout with individual wires coded and connections on identified studs or terminal blocks. Use no splices or similar connections in wiring except at terminal blocks, control compartments, junction boxes, or condulets. Provide 10 percent spare conductors throughout. Run spare wires from car connection points to individual elevator controllers in the machine room:

1) All wiring within hoistway shall be suitable for wet locations.

b. Conduit: Painted or galvanized steel conduit and duct. Conduit size, 1/2 inch minimum. Flexible conduit not to exceed 36 inches in length. Flexible heavy-duty service cord may be used between fixed car wiring and car door switches for door protective devices.

1) All raceways and wiring mounted on the top of the elevator shall be suitable for wet locations. The routing of the raceways or conduit shall be routed to preclude damage from being stepped on during maintenance. If this is not possible provide steps or other additional protection.

c. Traveling Cables: Type ET flame and moisture-resistant outer cover. Prevent traveling cable from rubbing or chafing against hoistway or equipment within hoistway. Refer to “special elevator equipment” for list for spares to be included in traveling cables.

10. Entrance Equipment:

a. Door Hangers: Two-point hanger roller with neoprene roller surface and suspension with eccentric upthrust roller adjustment.

b. Door Tracks: Bar or formed, cold-drawn removable steel tracks with smooth roller contact surface.

c. Door Interlocks: Operable without retiring cam. Paint interlocks flat black.

d. Door Closers: Spring, spirator, or jamb/strut mounted counterweight type. Design and adjust to ensure the smooth quiet mechanical close of doors.

e. Floor Numbers: Stencil paint 4-inch-high floor designations in contrasting color on inside face of hoistway doors at each landing and adjacent to the leading edge of the door.

I. Special Elevator Equipment: The elevators shall accommodate certain communication subsystem equipment which shall be provided. This equipment and its appurtenances shall be built into the elevator at the factory, unless noted otherwise:

1. CCTV Cameras: Provide and Install 2 cameras for each elevator:

a. Axis P3364 or approved equal.

b. Imaging device: 1/3-inch color CCD 3-9 mm, vari-focal, auto iris lens.

c. Ability to control and monitor video over IP network.

d. Supported protocols: TCP/IP, UDP/IP (unicast, multicast IGMP), UPnP, DNS, DHCP, RTP, NTP.

e. Supported video resolutions: 4CIF, 2CIF, CIF, QCIF.

f. Digital compression: MJPEG, MPEG-4.

g. Web user viewing interface with up to 5 additional simultaneous users.

h. Cameras to support low-light capability.

i. Camera shall be connected by CAT6 to an Ethernet PoE switch located in a Contractor supplied enclosure attached to the elevator cab.

2. CCTV Camera Enclosure: Provide and Install for each CCTV Camera:

a. Install CCTV cameras with protective housings.

b. Mini-dome with integrated camera and lens.

c. Tamper resistant hardware.

d. Rugged, high-impact, puncture-proof, opaque (smoked) dome plastic.

e. NEMA 4X and IP 66.

f. Input voltage: 18 - 30VAC, 24 VAC nominal.

g. Above ceiling dimensions: 2 inches high x 3.5 inches wide, nominal.

h. Below ceiling dimensions: 2.5 inches high x 5.5 inches wide, nominal.

i. Dome diameter: 3.75 inches, nominal.

j. Cable: RJ45-10 connector for 100Base-TX Ethernet.

2. Emergency Communication System: Complying with ASME A17.1 and the U.S. Architectural & Transportation Barriers Compliance Board's "Americans with Disabilities Act (ADA), Accessibility Guidelines (ADAAG)":

a. “Push to Call,” two-way communication instrument in car with automatic dialing, tracking, and recall features with shielded wiring to car controller in machine room. Provide dialer with automatic rollover capability with minimum two numbers:

1) “Push to Call” button or adjacent light jewel shall illuminate and flash when call is acknowledged. Button shall match car operating panel pushbutton design. Provide uppercase “PUSH TO CALL,” “HELP ON THE WAY” engraved signage adjacent to button.

2) Provide “Push to Call” button tactile symbol, engraved signage, and Braille adjacent to button mounted integral with car front return panel.

b. Communication for Deaf, Hard of Hearing and Speech Impaired: On the same car operating panel as the phone pushbutton, provide capability to communicate with and obtain responses from passengers, including those passengers who cannot communicate verbally or hear.

c. Provide display video capability for entrapment assessment.

d. Provide two-way communication between car and machine room.

e. On activation, system dials preprogrammed number of monitoring station and identifies elevator location to monitoring station.

f. System provides two-way voice communication without using a handset and provides visible signals that indicate when system has been activated and when monitoring station has responded.

g. System is contained in flush-mounted cabinet, with identification, and instructions for use.

4. PA Speakers:

a. Provide and install an 8-ohm public address speaker in the car canopy and connect via speaker cabling to Contractor provided PA terminals in the interface terminal cabinet.

b. Provide and install Atlas UKT speakers, 95-8-7 backbox, FAMT-6 adapter plate and 60-8A round satin aluminum finish grill or approved equal.

3. Radio Antenna: Provide mounting provisions for Commprod antenna in the elevator cab ceiling. Antenna to be provided by Emergency Radio Contractor. Provide cabling from the car to the interface terminal cabinet.. The antenna must be installed only if AHJ requires it:

   a. Where AHJ does not require a radio in the cab, designer must confirm there is adequate cell coverage at location of elevator. In the event that there is not adequate cell coverage, radio antenna per above must be provided.

4. For elevators requiring access to non-public floors: Provide and install Lenel 2210 door controller mounted in the NEMA 4X enclosure.

5. For elevators requiring access to non-public floors: Provide and install HID iClass R40 card reader in the elevator cab.

6. Sound Transit-provided PoE Ethernet Switch:

   a. Install ST-provided PoE Ethernet switches.

   b. One switch shall be installed in the elevator cab and the other in the Interface Terminal Cabinet.

   c. Minimum of 8 ports.

   d. At least one fiber port for switch-to-switch connection.

   e. Connect door controller and cameras to the Ethernet switch via CAT6 cable.

   f. The Ethernet switch in the elevator shall be connected to the Ethernet switch in the interface terminal cabinet via Contractor provided fiber optic cable in the travelling cable.

   g. Power for the switch shall be provided from the station's Communications UPS power.

   h. Configuration settings from the Ethernet switch per Sound Transit IT department.

7. Elevator Cab Enclosure: provide a NEMA 4X enclosure, attached to the elevator cab, accessible from inside the cab, sized to install the door controller, Ethernet switch, and fiber distribution panel.

   a. Layout of devices shall provide easy maintenance access.

   b. Provide elevator power to all powered devices in the enclosure.

8. Communications Cabling and Wiring: Provide and install communications systems wiring within the traveling cable from car device to the elevator controller cabinet or the Interface Terminal Cabinet. Land wiring on terminal blocks or connectors specifically made for the intended use. Provide and install conduit between elevator controller and the Interface Terminal Cabinet:

   a. All cabling to be plenum rated and shall be as follows:

1) Elevator cab PoE ethernet switch to elevator machine room ethernet switch: 6-strand plastic (multi-mode), or glass (single mode) fiber optic cable. Terminate all strands of the fiber in an FDP with LC connectors on both ends. Provide patch cords from the FDP to the switches.

2) The fiber cable provided and installed shall be rated to withstand the repeated movement associated with the duty cycle of the elevator (to be noted in product data submittal) while also meeting the Sound Transit performance criteria noted below over the expected life of the traveling cables.

3) Fiber Optic Performance Criteria:

a) Effective Minimum Bitrate (R) is two times the bandwidth (Δf): $R\ \left[\frac{Mb}{s}\right] = 2 * \Delta f\ [MHz]$

b) Attenuation Guidelines:

Glass Fiber	
Wavelength (nm)	**Attenuation Rate (db/km)**
1550	0.25
1625	0.25
Max Loss Budget Calculation	
Max Loss Budget [dB] =	(Length[km] * Attenuation Rate) + (Connector pairs * 0.25 dB) + (Number of splices * 0.25 dB)
Plastic Fiber	
Wavelength (nm)	**Attenuation Rate (db/m)**
650	0.2
Max Loss Budget Calculation	
Max Loss Budget [dB] =	(Length[m] * Attenuation Rate) + (Connector pairs * 2.5 dB) + (Number of splices * 2.5 dB)

h. Testing Requirements:

a) Minimum Effective Bitrate of 2.5 Mb/sec.

4) Losses determined from OTDR testing within the calculated Max Loss Budget.

Example: 100-meter Elevator Traveling Cable Fiber Optic Criteria		
Fiber Material	**Effective Minimum Bitrate**	**dB Max. Loss Budget**

Plastic	2.5 Mb/sec	25.70 dB
Glass	2.5 Mb/sec	1.73 dB

5) Installing contractor shall demonstrate fiber optic performance via witnessed OTDR dB attenuation testing conducted in accordance with TIA-568-C.0 Compliant Fiber Optic Test Procedures. Fiber cable must meet the above performance upon initial testing and throughout the full life of the traveling cables.

6) Installing contractor to conduct testing for bandwidth to determine effective minimum bit rate over the fully connected traveling cable between nearest elevator machine room network connection switch and cab network switch. Regardless of traveling cable length, the Effective Minimum Bitrate of 2.5Mb/sec is required.

7) Test results shall be provided to Sound Transit under Submittals.

d. Paging speaker: One copper pair 16 AWG.

b. Radio Antenna: One super flex 75-ohm coaxial cable.

c. Wiegand cabling from the door controller to the access card reader.

d. CAT6:

1) Elevator cab: from the cameras and door controller to the PoE Ethernet switch.

2) Interface Terminal Cabinet: from the PoE Ethernet switch to RJ45 jacks on the interface terminal cabinet.

e. Instrumentation: Minimum 6 shielded twisted pairs; minimum #18-gauge instrumentation cable.

f. Provide four pairs of spare shielded communication wires in addition to those required to connect specified items. Tag spares in machine room.

2.04 COMPONENTS

A. Hoistway Entrances:

1. Complete entrances bearing UL fire labels.

2. Frames: Stainless steel at all floors. Standard bolted head to jamb connection assemblies fabricated from not less than 14-gauge material. Permanently attach rear mounted Arabic floor designation plates, centerline at 60 inches above finished floor, on both sides of jambs existing. Provide main egress landing plates with Star designation. Braille indications shall be below Arabic floor designation.

3. Door Panels: 16-gauge non-directional finish stainless steel, sandwich construction without binder angles.

a. Provide leading edge of side-opening doors with rubber astragals. Provide a minimum of three gibs per panel; one at leading edge, one at trailing edge and one at center of leaf with gibs in the sill groove entire length of travel.

b. Provide leading edge of center-opening doors with rubber astragals. Provide a minimum of three gibs per panel; one at leading edge, one at trailing edge and one at center of leaf with gibs in the sill groove entire length of travel:

1) Gibs shall be roller type, with three rollers per gib, to reduce kinetic friction effects during hoistway pressure differential events.

c. Elevators with Rated Shaft: Provide safety glass vision panel approximately 4 inches by 20 inches in one panel.

d. Elevators without Rated Shaft: Provide 9/16-inch-thick laminated tempered glass approximately 16 inches by 72 inches in each door panel.

4. Sight Guards: 14-gauge, same material and finish as hoistway entrance door panels. Construct without sharp edges.

5. Sills: Extruded nickel silver.

6. Sill Supports: Structural steel designed to support door sill based upon car loading classification protected from corrosion. Grout under the sill. Five-inch by 5-inch by 1/2-inch hot-rolled structural steel angle, extend full width of hoistway. Fasten to building structure at maximum 18 inches on center. Refer to Issued for Construction Drawings for additional details.

7. Fascia, Toe Guards, and Hanger Covers: 14-gauge furniture steel with Manufacturer's standard finish. Provide fascia, toe guards, and hanger covers for rear entrances. Provide fascia for express hoistway travel.

8. Struts and Headers: Provide for vertical support of entrances and related material.

9. Finish of Frames and Doors: Non-directional finish stainless steel.

B. Hall Control Stations:

1. Pushbuttons: Provide one riser with flush-mounted faceplates. Include pushbuttons for each direction of travel, which illuminate to indicate call registration. Include approved engraved message and pictorial representation prohibiting use of elevator during fire or other emergency situation as part of faceplate. Pushbutton design shall match car operating panel pushbuttons. Provide vandal resistant pushbutton and light assemblies. Circuit boards for hall call station switches shall be conformal coated.

2. Hoistway Door Unlocking Device: Provide unlocking device with locking escutcheon plug in door panel at all floors with finish to match adjacent surface.

3. Hoistway Access Switches: Mount in entrance frame side jamb at top and bottom floors. Provide fixture with faceplate.

4. Faceplate Material and Finish:

a. Hall Lantern: Non-directional stainless steel.

b. Car Position Indicator: Non-directional stainless steel.

c. Lobby Position Indicator: Non-directional stainless steel.

d. Hall Pushbutton Station: Non-directional stainless steel.

e. Hoistway Access Switch: Non-directional stainless steel.

C. Signals:

1. Hall Lantern: Provide at each entrance to indicate travel direction of arriving car. Locate as detailed on Issued for Construction Drawings. Illuminate up or down lights and sound tone twice for down direction travel prior to car arrival at floor. Sound level to be adjustable from 20 to 80 dBA measured at 5 feet in front of hall pushbutton and 3 feet off floor. Illuminate light until the car doors start to close. Provide advanced hall lantern notification to comply with ADA hall call notification time. Minimum 2 and 1/2 inches in the smallest dimension, arrow lenses with faceplates. Provide vandal resistant lantern and light assemblies consisting of series of dots or lines for maximum visibility.

2. Car Position Indicator: Alpha-numeric digital indicator containing floor designations and direction arrows a minimum of 1/2 inch high to indicate floor served and direction of car travel. Locate fixture in each car operating panel. When a car leaves or passes a floor, illuminate indication representing position of car in hoistway. Illuminate proper direction arrow to indicate direction of travel. Provide vandal resistant indicator and light assemblies.

3. Lobby Position Indicator: Alpha-numeric digital indicator containing floor designations and direction arrows a minimum of 1/2 inch high to indicate floor served and direction of car travel. Locate fixture integral with hall lanterns at Plaza level. When a car leaves or passes a floor, illuminate indication representing position of car in hoistway. Illuminate proper direction arrow to indicate direction of travel. Provide vandal resistant indicator and light assemblies.

4. Floor Passing Tone: Provide an audible tone of no less than 20 dBA and frequency of no higher than 1500 Hertz, to sound as the car passes or stops at a floor served.

5. Voice Synthesizer: Provide electronic device with easily re-programmable message and voice to announce car direction, floor, and emergency exiting instructions.

6. Card reader override: Provide conduit and wiring to control panel. Fixtures shall be located as directed by the Resident Engineer. Coordinate size and location.

7. Fire Fighters' Control Panel: Within tunnel stations (or otherwise required by AHJ) locate in the station's Fire Command Center Room. Furnish and install panel and all applicable wiring from each elevator to the fire panel. All supplied conductors shall conform to the requirements of NFPA 130. Associated conduit to be provided by Electrical. Fixture faceplate, No. 4 brushed finish stainless steel, including the following features:

   a. Car position and direction indicator (digital-readout or color SVGA display type). Identify position indicator with car number.

   b. Indicator showing operating status of car.

   c. Wiring to panel. Conduit from closest elevator hoistway of each group by others.

   d. Manual car standby power selection switch and power status indicator.

   e. Two position fire fighter's emergency return switches and indicators with engraved instructions filled with red epoxy paint.

8. Communication Failure: Provide phone line communication failure indicator light and reset keyswitch integral mounted within hall control station located at the primary phase 1 recall landing.

9. Seismic Operations and Equipment 0. Provide design, components, and operation in accordance with ASME A17.1, Part XXIV.

PART 3 - EXECUTION

3.01 EXAMINATION

A. Before installing equipment, examine hoistway and machine room areas. Verify that no irregularities exist that affect execution of work specified. Hoistway and pit to be evaluated and confirmed as sealed and watertight prior to commencing installation of elevator equipment.

B. Do not proceed with installation until work in place conforms to Contract requirements.

3.02 INSTALLATION

A. Install all equipment in accordance with Manufacturer's instructions, referenced Codes, these Contract Specifications and approved submittals.

B. Install machine room equipment with clearances in accordance with referenced Codes and these Contract Specifications.

C. Install all equipment so it may be easily removed for maintenance and repair.

D. Install all equipment for ease of maintenance.

E. Install all equipment to afford maximum accessibility, safety, and continuity of operation.

F. Remove oil, grease, scale, and other foreign matter from the following equipment and apply one coat of field-applied machinery enamel.

1. All exposed equipment and metal work installed as part of this work that does not have architectural finish.

2. Machine room equipment, hoistway equipment including guide rails, guide rail brackets, and pit equipment.

3. Neatly touch up damaged factory-painted surfaces with original paint and color. Protect machine-finish surfaces against corrosion.

3.03 FIELD QUALITY CONTROL

A. Perform tests required by the elevator Section of the Washington State Department of Labor and Industries. Perform tests in accordance with procedures described in ASME A17.2.1 inspector's manual for Electric Elevators and as required by the authorities having jurisdiction in the presence of the Resident Engineer.

B. Contractor is not relieved from furnishing and installing work shown or specified which may be beyond requirements of ordinances, laws, regulations or codes.

C. Work at jobsite will be checked during course of installation. Full cooperation with reviewing personnel is mandatory. Accomplish corrective work required prior to performing further installation.

D. Have Code Authority acceptance inspection performed and complete corrective work.

3.04 ADJUSTING

A. Install rails plumb and align vertically with tolerance of 1/16 inch in 100 feet. Secure joints without gaps and file any irregularities to a smooth surface.

B. Static balance car to equalize pressure of guide shoes on guide rails.

C. Lubricate all equipment in accordance with Manufacturer's instructions.

D. Adjust motors, power conversion unit, brake, controllers, leveling switches, limit switches, stopping switches, door operators, interlocks, and safety devices to achieve required performance levels.

3.05 CLEANING

A. Keep work areas orderly and free from debris during progress of Contract. Remove packaging materials on a daily basis.

B. Remove all loose materials and filings resulting from work.

C. Clean machine room equipment and floor.

D. Clean hoistways, car, car enclosure, entrances, and operating and signal fixtures per submitted procedures as required to meet sign off requirements of L&I.

3.06 DEMONSTRATION

A. General: Furnish labor, materials, and equipment necessary for tests. Notify the Resident Engineer five days in advance when ready for final review of unit or group. Acceptance of installation will be made only after all field-quality control reviews have been completed, identified deficiencies have been corrected, all Sound Transit's information and certificates have been received, and the following items have been completed to satisfaction of Sound Transit:

1. Workmanship and equipment comply with these Contract Specifications.

2. Contract speed, capacity, floor-to-floor, and door performance comply with these Contract Specifications.

3. Performance of following are satisfactory:

a. Starting, accelerating, running.

b. Decelerating, stopping accuracy.

c. Door operation and closing force.

d. Equipment noise levels.

e. Lighting levels.

f. Signal fixture utility.

g. Overall ride quality.

h. Performance of door control devices.

i. Operations of special security operation and floor lock-off provisions.

j. Fiber optic cabling within travelling cables performs to Sound Transit Elevator Traveling Cable Fiber Optic Performance Criteria.

k. Demonstrate CCTV Camera image on computer connected to data cable to Interface Terminal Cabinet.

l. Demonstrate the PA system works by connecting to an amp and broadcasting voice over speaker.

m. Demonstrate phone installation by dialing designated ST control center.

n. Demonstrate each monitoring and control signal to Building Management System at interface Terminal Cabinet.

4. Test Results:

a. In all test conditions, obtain specified speed, performance times, stopping accuracy without re-leveling, and ride quality to satisfaction of the Resident Engineer,

b. Temperature rise in motor windings limited to 120 degrees F above ambient. A full-capacity, 1-hour running test, stopping at each floor for 10 seconds in up and down directions, may be required.

B. Performance Guarantee: Should tests reveal defects, poor workmanship, variance or noncompliance with requirements of specified Codes and/or ordinances, or variance or noncompliance with the requirements of these Specifications, complete corrective work to satisfaction of Resident Engineer at no cost:

1. Replace equipment that does not meet Code or these Specifications requirements.

2. Perform work and furnish labor, materials, and equipment necessary to meet specified operation and performance.

3. Perform and assume cost for retesting required by Governing Code, Authority, and Sound Transit to verify specified operation and/or performance.

C. Field Review Scheduling: Schedule progress and final equipment reviews with the Resident Engineer. Reply promptly, in writing, to corrective work indicated on the Resident Engineer's progress and/or final review reports, indicating status, schedule for completion, and questions.

3.07 TRAINING

A. Provide orientation and training to familiarize Sound Transit operations personnel with the features and operation of the elevator.

1. Include step-by-step instructions for elevator operations, controls and features, including procedures for locking down elevators when not in service.

2. Training shall include complete familiarization of the elevator and elevator machine room, including components installed within the machine room.

3. Provide training materials that detail step-by-step instructions of elevator operations for use in future familiarization training of personnel.

3.08 COMMISSIONING

A. Refer to specifications Section 14 08 00 - Commissioning of Conveying Equipment for further requirements pertaining to the work in this section.

END OF SECTION

SECTION 14 24 00

HYDRAULIC ELEVATORS

PART 1 - GENERAL

1.01 SUMMARY

A. Section includes:

1. Requirements for furnishing and installing and providing Maintenance for hydraulic passenger elevators as specified and detailed in the Issued for Construction Drawings.

B. Related work provided under other sections:

1. Hoistway and Pit:

a. Clear, plumb, and substantially flush hoistway with variations not to exceed 1 inch at any point.

b. Bevel cants not less than 75 degrees with the horizontal on any rear or sidewall ledges and beams that project or recess 4 inches or more into the hoistway. Not required on hoistway divider beams.

c. Supports at each floor for car and counterweight guide rail fastening. Intermediate support when heights exceed 14 feet 0 inch. Building supports not to deflect more than 1/8 inch under normal conditions and 1/4 inch under seismic conditions.

d. Installation of guide rail bracket supports in concrete. Inserts or embeds, if used, will be furnished under this Section.

e. Wall blockouts and fire rated backing for control and signal fixture boxes that penetrate walls.

f. Cutting and patching walls and floors. Finished floors slope away from elevator doors.

g. Opening in hoistway wall or pit wall for hydraulic piping. Trench and backfill underground piping.

h. Erect front hoistway wall after elevator entrances are installed.

i. Grout around hoistway entrances and sills.

j. Provide pit access ladder for each elevator.

k. Provide structural support for car buffer impact loads, guide rail loads, and cylinder loads.

l. Waterproof pit. Dry sump with flush grate. Provide pump or indirect drain to remove accumulated liquid.

m. Protect open hoistways and entrances during construction in accordance with OSHA Regulations.

n. Protect car enclosure, hoistway entrance assemblies, and special metal finishes from damage after installation.

o. Hoistway venting or pressurization to prevent accumulation of smoke and gas as required by Local Building Code.

p. Seal fireproofing to prevent flaking.

2. Machine Room:

a. Provide enclosure with access.

b. Provide self-closing and locking access door with panic door hardware.

c. Provide ventilation, air conditioning and heating as required. Maintain minimum temperature of 55 degrees F, maximum 90 degrees F. Maintain maximum 80 percent relative humidity, non-condensing.

d. Paint walls, ceiling, and floor.

e. Provide class “ABC” fire extinguisher.

f. Seal fireproofing to prevent flaking.

g. Provide fire sprinklers where required by code.

h. Only conduit, wiring, and equipment directly related to the hydraulic elevator are allowed in elevator machine rooms.

3. Electrical Service, Conductors and Devices:

a. Provide lighting and Ground Fault Circuit Interrupter (GFCI) convenience outlets in pit and machine room.

b. Provide conduit from elevator controller to fire alarm system interface in/near the elevator machine room. Coordinate size, number, and location of conduits.

c. Provide three-phase mainline copper power feeder to terminals of each elevator controller in the machine room with protected, lockable “OPEN,” disconnect with auxiliary contacts to allow electrical interlock with battery power lowering unit.

d. Provide single-phase copper power feeder to each elevator controller for car lighting and exhaust blower with individual protected, lockable “OFF,” disconnect switch located in machine room.

e. Provide single-phase copper power feeder to each elevator controller for tank heater, cylinder heat trace system and oil cooler system (min. 20 amps) with individual protected, lockable “OFF”, disconnect switch located in machine room.

f. See Section 28 31 00 - Fire Detection and Alarm for fire detection and fire recall. Provide temporary power and illumination to install, test, and adjust elevator equipment.

g. Provide means to manually and automatically disconnect power to affected elevator pump unit and controller prior to activation of machine room overhead fire sprinkler system, and/or hoistway overhead fire

sprinkler system. Manual shut-off means shall be located outside bounds of machine room.

h. When sprinklers are provided in the hoistway, all electrical equipment, except seismic protective devices, located less than 4 feet above the pit floor shall be identified for use in wet locations (NFPA 70).

i. Provide power feeder to elevator intercom amplifier located in the elevator machine room.

j. Provide power feeder to each elevator controller in machine room for elevator car heating and air conditioning unit.

4. Standby Power Provision:

a. Standby power of the same voltage characteristics via normal electrical feeder to run all elevators at full-rated car speed and capacity.

b. Conductor from auxiliary form “C” dry contacts, located in the standby power transfer switch to a designated elevator control panel in each elevator group and/or single elevator unit. Provide time delay of 30-45 seconds for pre-transfer signal in both directions.

c. Standby single-phase power to group controller, and each elevator controller for lighting, exhaust blower, emergency call bell, intercom amplifier, and hoist machine cooling fan.

d. Means for absorbing regenerated power during an overhauling load condition, in accordance with NEC 650-101. Elevator shall employ SCR IBGT drive, presenting a non-linear active load.

e. Provide elevator machine room ventilation or air conditioning per code.to function within the temperature range established by the elevator equipment manufacturer including during standby power modes.

C. Equipment furnished by Sound Transit, installed under this Section:

1. Network Switch.

1.02 REFERENCES

A. Reference Standards: This Section incorporates by reference the latest revisions of the following documents:

1. American National Standards Institute (ANSI):

a. ANSI Z97.1 For Safety Glazing Materials Used in Buildings – Safety Performance Specifications and Methods of Test.

2. American Society of Mechanical Engineers (ASME):

a. ASME A17.1 Safety Code for Elevators and Escalators Includes Requirements for Elevators, Escalators, Dumbwaiters, Moving Walks, Material Lifts, and Dumbwaiters with Automatic Transfer Devices.

b. ASME A17.2 Guide for Inspection of Elevators, Escalators, and Moving Walks – Includes Inspection Procedures for Electric Traction and Winding Drum Elevators, Hydraulic Elevators, Inclined Elevators, Private Resident Elevators, and Escalators and Moving Walks.

c. ASME A17.5 Elevator and Escalator Electrical Equipment.

3. ASTM International (ASTM):

a. ASTM A36/A36M Standard Specification for Carbon Structural Steel.

b. ASTM A53 Standard Specification for Pipe, Steel, Black and Hot-Dipped, Zinc-Coated, Welded and Seamless.

c. ASTM A167 Standard Specification for Stainless and Heat-Resisting Chromium-Nickel Steel Plate, Sheet, and Strip.

d. ASTM A568/A568M Standard Specification for Steel, Sheet, Carbon, Structural, and High-Strength, Low-Alloy, Hot-Rolled and Cold-Rolled, General Requirements.

e. ASTM A1008/A1008M Standard Specification for Steel, Sheet, Cold-Rolled, Carbon, Structural, High-Strength Low-Alloy, High-Strength Low-Alloy with Improved Formability, Required Hardness, Solution Hardened, and Bake Hardenable.

f. ASTM A1011/A1011M Standard Specifications for Steel, Sheet and Strip, Hot-Rolled, Carbon, Structural, High-Strength Low-Alloy, High-Strength Low-Alloy with Improved Formability, and Ultra-High Strength.

g. ASTM B151 (B151M) Standard Specification for Copper-Nickel-Zinc Alloy (Nickel Silver) and Copper-Nickel Rod and Bar.

h. ASTM B209 Standard Specification for Aluminum and Aluminum-Alloy Sheet and Plate.

i. ASTM B221 Standard Specification for Aluminum and Aluminum-Alloy Extruded Bars, Rods, Wire, Profiles and Tubes.

j. ASTM B418 Standard Specification for Cast and Wrought Galvanic Zinc Anodes.

4. Americans with Disabilities Act of 1990 (ADA):

a. ADA Accessibility Guidelines (ADAAG).

5. Consumer Product and Safety Commission (CPSC):

a. CPSC 16 CFR Part 1201 Safety Standard for Architectural Glazing Materials.

6. Federal Standard and NAAMM nomenclature.

7. International Code Council (ICC):

a. International Building Code (IBC) – Applicable to Projects Not Located Within Seattle.

b. IBC Chapter 30 Elevators and Conveying Systems.

8. Institute of Electrical and Electronics Engineers, Inc. (IEEE):

a. IEEE 446 IEEE Recommended Practice for Emergency and Standby Power Systems for Industrial and Commercial Applications.

9. Telecommunications Industry Association (TIA):

   a. TIA-568-C.0 Generic Telecommunications Cabling for Customer Premises.

10. National Fire Protection Association (NFPA):

   a. NFPA 70 National Electrical Code.

   b. NFPA 72 National Fire Alarm and Signaling Code.

   c. NFPA 101 Life Safety Code.

   d. NFPA 130 Standard for Fixed Guideway Transit and Passenger Rail Systems.

11. Occupational Safety & Health Administration (OSHA):

   a. 29 CFR Part 1926, Safety and Health Regulations for Construction.

12. The Society for Protective Coatings (SSPC):

   a. SSPC SP 6 Commercial Blast Cleaning.

13. Code Amendments from local AHJ's including but not limited to:

   a. Seattle Building Code (SBC) – Applicable to Projects Located Within Seattle.

   b. SBC Chapter 30 Elevators and Conveying Systems.

14. Washington Administrative Code (WAC):

   a. Title 296: Department of Labor and Industries; Chapter 296-96: Safety Regulations and Fees for all Elevators, Dumbwaiters, Escalators, and Other Conveyances.

15. American Welding Society, Inc. (AWS):

   a. AWS A2.4 Standard Symbols for Welding, Brazing, and Nondestructive Examination.

   b. AWS D1.1/D1.1M Structural Welding Code – Steel.

16. International Standards Organization (ISO):

   a. ISO 281-1:1997 Rolling Bearings Dynamic Load Ratings and Rating Life.

B. Definitions:

1. Terms used are defined in the latest edition of the Safety Code for Elevators and Escalators, ASME A17.1.

2. Reference to a device or a part of the equipment applies to the number of devices or parts required to complete the installation.

1.03 SUBMITTALS

A. Submit:

1. Pre-revenue Warranty Maintenance Plan:

a. Submit a detailed Pre-revenue Warranty Maintenance Plan.

2. Shop Drawings: Scaled and Fully Dimensioned Layout that includes plans of pit, hoistway, and machine room indicating equipment arrangement, elevation section of hoistway, details of car enclosures, hoistway entrances, and car/hall signal fixtures.

3. Indicate equipment lists, reactions, and design information on layouts include heat dissipation requirements for machine room and hoist beam load requirements.

4. Power Confirmation Sheets: Include motor horsepower, code letter, starting current, full load running current, and demand factor for applicable motors.

5. Complete control and schematic wiring diagram of the elevator system and subsystems.

6. Elevator controller, including manufacturer's technical data and product data, and interface hardware and software requirements.

7. Within 60 days after Notice to Proceed and before beginning equipment fabrication, submit shop drawings and required material for review.

B. Finish Material: Submit 3-inch by 12-inch samples of actual finished material for review of color, pattern, and texture by Resident Engineer. Compliance with other requirements is the exclusive responsibility of the Contractor. Include signal fixtures, lights, graphics, Braille plates, and mounting provisions.

C. The Contractor shall submit material safety data and product data sheets for all products used by the contractor at the site or which may need to be replaced or added to by the maintenance personnel. Such products include but are not limited to greases, oils and paint. The sheets shall have an index listing each product along with application method, approximate quantity required of the product and the component the product is associated with.

D. Testing Submittals:

1. Submit fiber optic performance test procedure and results.

E. Product Data for Special Elevator Equipment: Submit product catalogs for speakers, cameras, intercom/emergency telephone, Ethernet switch, traveling cable data cables, card reader and door controllers.

F. Operation and Maintenance Manuals:

1. In addition to the requirements stated elsewhere in the Contract Documents, include the following as minimums:

a. Printed Instructions: Three sets of neatly bound instructions explaining all operating features.

b. Complete installation, maintenance, adjustment, removal, and testing instructions and procedures for all elevator equipment and components. All instructions shall be at the adjuster's level and specific to the equipment installed:

1) Include inspection and maintenance standards including wear limits, settings and tolerances.

c. Wiring Diagrams: Include a complete set within each Operation and Maintenance Manual, as well as three individually printed and bound

complete sets, of as-installed straight-line wiring diagrams showing the electrical connections of all equipment and all modifications to control circuits. Furnish a legend sheet with each set of drawings to provide the following information:

1) Name and symbol of each relay, switch, or other apparatus.

2) Location on drawings, drawing sheet number and area, and location of all contacts.

3) Location of apparatus, whether on controller or on car.

4) Sequence of operation of apparatus connected with each elevator.

d. Complete software documentation for all installed equipment, including software updates and or revisions during the progress of the Work.

e. Lubricating instructions and schedule, including recommended grade of lubricants.

f. Hoistway cleaning procedures required to meet sign off requirements of L&I.

g. List of Special Tools required for inspection, adjustment, maintenance, repair and testing. Provide special tools to Sound Transit. Special tools shall be the property of Sound Transit and kept in the elevator machine room at all times when not in use.

h. List of recommended spare parts and stock quantities for routine maintenance of the equipment. Include a list of spare parts considered critical and for which long lead time frames (items no available within 48 hours) for acquisition would result in extended equipment down-time.

i. Parts Catalog: Complete parts catalogs listing all replaceable parts including Manufacturer's identifying numbers, current unit price and ordering instructions. Include the complete parts catalog in each Operation and Maintenance Manual, as well as three separate complete printed sets.

j. The Operation and Maintenance Manual shall contain only information related to the equipment installed. Generic information not relevant to the installed equipment shall not be included.

G. Special Tools:

1. Provide a complete set of special tools and instruments necessary for troubleshooting and making all adjustments on every part of the elevator installation. Any tools that are designed specifically for tasks associated with elevator inspection, maintenance and repair or that are required for these tasks, are special tools.

2. Diagnostic Equipment: Provide all diagnostic test devices complete with instructions, access codes, adjusters' manuals and set-up manuals for adjustment, diagnosis and troubleshooting of elevator system, and performance of routine safety tests.

3. Storage cabinet: Provide and install a lockable metal cabinet in each elevator machine room of suitable size for the storage of special tools and necessary spare

parts. Cabinet shall be mounted on legs or a pedestal a minimum of 4 inches off the floor. Cabinet to be keyed to Sound Transit standard keying system.

H. Four sets of neatly tagged keys for all switches and control features properly tagged and marked.

1.04 QUALITY ASSURANCE

A. Comply with most stringent applicable provisions of the Code or Authority specified in Article 1.02, herein, including revisions and changes in effect on date of these Contract Specifications.

1.05 DELIVERY, STORAGE AND HANDLING

A. Deliver material in Manufacturer's original, unopened protective packaging.

B. Store material in original protective packaging. Prevent soiling, physical damage, or moisture damage.

C. Protect equipment and exposed finishes from damage and stains during transportation, erection, and construction.

1.06 WARRANTY MAINTENANCE

A. Pre-revenue Warranty Maintenance:

1. Provide full-service Warranty Maintenance as described in this section. This period shall commence upon installation and extend to the start of Revenue Service:

a. Full-service maintenance shall include standard monthly maintenance, replacement parts, and annual testing.

2. Document completed monthly maintenance during warranty within the installer-provided Maintenance Control Program (MCP) that is kept at all times within the elevator machine room.

3. Provide preventive maintenance as recommended by the manufacturer and in accordance with all applicable codes, during normal working hours. Systematically examine, adjust, clean, and lubricate equipment, parts, components, and subsystems. Repair or replace defective parts using parts produced by the manufacturer of installed equipment. Maintain elevator machine room, hoistway, and pit in clean condition.

4. Defective is defined to include, but not to be limited to; operation or control system failures, performance below required minimum, excessive wear, unusual deterioration or aging of materials or finishes, unsafe conditions, the need for excessive maintenance, abnormal noise or vibration, and similar unsatisfactory conditions.

5. Exercise each elevator during monthly maintenance visits and document in the MCP. Exercising of equipment shall consist of continuous operation through entire run of hoistway for one hour..

6. All warranty and maintenance work shall be performed by a company that has a current code compliant Maintenance Control Program (MCP) on file with L & I. Warranty maintenance shall meet the MCP criteria as outlined in ASME A17.1 as well as all manufacturer's recommended maintenance.

7. Equipment Manufacturer is responsible for upgrades and revisions of software and documentation of associated revision to the Operations and Maintenance Manual.

8. The Contractor shall document all maintenance and transmit maintenance records to Sound Transit.

B. Extended Warranty Maintenance:

1. Provide Extended Warranty Maintenance for a five-year period commencing at the start of Revenue Service, per Appendix A “Extended Maintenance Services Scope of Work” and as generally described below.

2. Provide full-service preventive maintenance as recommended by the manufacturer and in accordance with all applicable codes, and 24 hour emergency callback service. Systematically examine, adjust, clean, and lubricate equipment. Repair or replace parts as necessary using parts produced by the manufacturer of installed equipment. Maintain elevator machine room, hoistway, and pit in clean condition.

3. 24-hour emergency callback service shall comply with the following response times:

a. Service requests placed between 6:00am and 6:00pm: 1 hour.

b. Service requests other hours, weekends, and holidays: 2 hours.

4. Removal of units from beneficial usage for maintenance purposes shall be coordinated with and approved by Sound Transit, unless removal is necessitated for emergency repair or adjustment. Normal preventive maintenance service shall be performed during off-peak operating hours.

5. All units shall be available for use an average of 98.7% of property hours of operation over each three-month period during Extended Warranty Maintenance service. This includes allowance for equipment out of service time as the result of callbacks, scheduled preventive maintenance, and repairs. Contractor’s failure to meet this unit availability provision for two consecutive three-month periods for any single elevator or escalator, or group of units, shall trigger an automatic maintenance audit by Sound Transit. Contractor agrees to expeditiously take corrective action in regard to identified deficiencies. Further, Contractor acknowledges Sound Transit’s right to pass cost of said audit to Contractor.

6. All warranty and maintenance work shall be performed by a company that has a current code compliant Maintenance Control Program (MCP) on file with L & I.

7. Equipment Manufacturer is responsible for upgrades and revisions of software and documentation of associated revision to the Operations and Maintenance Manual.

1.07 PERMIT, TEST AND INSPECTION

A. Obtain and pay for permit, license, and inspection fee necessary to complete the installation. Installation will be considered complete when the governing authority of Washington State Department of Labor and Industries has issued a permanent operating permit for each elevator.

B. Perform tests required by the elevator Section of the Washington State Department of Labor and Industries. Perform tests in accordance with procedures described in ASME A17.2.1 inspector’s manual for Electric Elevators and as required by the authorities having jurisdiction in the presence of the Resident Engineer.

C. Contractor is not relieved from furnishing and installing work shown or specified which may be beyond requirements of ordinances, laws, regulations or codes.

PART 2 - PRODUCTS

2.01 MANUFACTURERS

A. Approved Manufacturers:

1. Hydraulic Installers: KONE, Otis, Schindler, TK Elevator or Mid-American or approved equal- must be reviewed and approved by Sound Transit and meet APTA grade requirements..

2. Hydraulic Equipment: KONE, Otis, Schindler, TK Elevator or Mid-American or approved equal- must be reviewed and approved by Sound Transit and meet APTA grade requirements..

3. Control Manufacturers: Manufacturers standard controls (non-proprietary) KONE, Otis, Schindler, TK Elevator or Mid-American or approved equal- must be reviewed and approved by Sound Transit and meet APTA grade requirements..

B. Car Enclosure: KONE, Otis, Schindler, TK Elevator or Mid-American or approved equal- must be reviewed and approved by Sound Transit and meet APTA grade requirements. Hoistway Entrance: KONE, Otis, Schindler, TK Elevator or Mid-American or approved equal- must be reviewed and approved by Sound Transit and meet APTA grade requirements.

C. Steel:

1. Sheet Steel (Furniture Steel for Exposed Work): Stretcher leveled, cold rolled, commercial quality carbon steel, complying with ASTM A1008, matte finish.

2. Sheet Steel (for Unexposed Work): Hot rolled, commercial quality carbon steel, pickled and oiled, complying with ASTM A568 and A1011.

3. Structural Steel Shapes and Plates: ASTM A36.

D. Stainless Steel: Type 316 complying with ASTM A167, with standard tempers and hardness required for fabrication, strength, and durability. Apply mechanical finish on fabricated work in the locations shown or specified (Federal Standard and NAAMM nomenclature) with texture and reflectivity required to match Resident Engineer's sample. Protect with adhesive-paper covering:

1. Non-directional orbital uniform finish: 80 grit orbital sanding over standard mill plate or shape to produce a uniform non-directional satin finish with 90 percent of mill marks removed to match Resident Engineers visual sample.

E. Aluminum: Extrusions conforming to ASTM B221; sheet and plate conforming to ASTM B209.

F. Nickel Silver: Extrusions conforming to ASTM B151/151M.

G. Paint: Clean exposed metal parts and assemblies of oil, grease, scale, and other foreign matter and factory paint one shop coat of rust resistant primer. After erection, provide one finish coat of industrial enamel paint. Galvanized metal need not be painted.

H. Prime Finish: Clean all metal surfaces receiving baked enamel paint finish of oil, grease, and scale. Apply one coat of rust resistant primer followed by a filler coat over uneven surfaces. Sand smooth and apply final coat of primer.

I. Baked Enamel Finish: Prime finish in accordance with Article 2.02F, herein. Apply and bake three additional coats of enamel in the selected solid color.

J. Glass: Laminated safety glass, minimum 9/16 inch thick, conforming to ANSI Z97.1 and CPSC 16 CFR Part 1201.

2.02 EQUIPMENT

A. Equipment shall be the same for all contracts except where specifically noted. Where variations occur, each contract shall be specified separately.

B. Elevators:

1. Number:

a. As specified and as detailed on Issued for Construction Drawings

2. Capacity and Loading Classification:

a. As specified and as detailed on Issued for Construction Drawings

3. Speed: 125 feet per minute.

4. Operational Control: Selective collective, microprocessor-based system.

5. Motor Control: Single speed AC with SCR soft start with closed transition.

6. Power Characteristics: 480 Volts, 3 Phase, 60 Hertz.

7. Stops and Openings: As specified and as detailed on Issued for Construction Drawings.

8. Floors Served: As specified and as detailed on Issued for Construction Drawings.

9. Travel: As specified and as detailed on Issued for Construction Drawings.

10. Minimum Clear Inside Car:

a. Geometry Type A: 5 feet 8 inches wide by 7 feet 10 inches deep.

b. Geometry Type B: 7 feet 8 inches wide by 5 feet 3 inches deep.

11. Entrance Size: 4 feet 0 inches wide by 7 feet 0 inch high.

12. Entrance Type: As detailed in Issued for Construction Drawings.

13. Door Operation: High-speed, heavy duty, master door operator, minimum opening speed 2.5 feet per second.

14. Door Protection: Infrared, full screen device, with differential timing and nudging and interrupted beam time.

15. Machine: Hydraulic pump.

16. Hydraulic Type: In Ground Hydraulic (unless conditions require hole-less - dual telescoping jacks- to be approved by ST.)

17. Hydraulic Jack Assembly:

a. See Article 2.02.H.3 herein.

18. Machine Room: As specified and as detailed on Issued for Construction Drawings.

19. Guide Rails: Planed steel tees.

20. Buffers: Spring.

21. Car Enclosure: As specified and as detailed on Issued for Construction Drawings Car ceiling height of 8 feet.

22. Signal Fixtures: Vandal resistant assembly.

23. Registration Lights: Single hall pushbutton riser. Single car operating panel per entrance. Vandal-resistant car and hall pushbuttons.

    a. Hall buttons and control devices shall be NEMA 4.

24. Position Indicator: Dual digital with direction arrow.

25. Hall Lanterns: At all floors with volume adjustable electronic chime or tone. Sound twice for down direction. Vandal resistant:

    a. Hall lanterns shall be NEMA 4 enclosures at all locations.

26. Hoistway wiring, conduit and enclosures shall be rated for wet locations.

27. Additional Features:

    a. Car roller guides.

    b. Car top inspection station.

    c. Guardrails at car top to meet code requirements for safety.

    d. Firefighters' service, including alternate floor return feature.

    e. Battery pack standby power provision.

    f. Accessibility and emergency medical services access and signage.

    g. Hinged car return panels arranged for integral car operating panels.

    h. Hoistway access switches.

    i. Hoistway door unlocking device. All floors with locking escutcheon plugs.

    j. Independent service feature.

    k. Platform isolation – jack to bolster connection(s).

    l. Firefighters' elevator control panel located in Fire Command Center Room and remote wiring for tunnel station or where required by local AHJ.

    m. Tamper resistant fasteners for signal fixture faceplates.

    n. Sill support angles.

    o. Hydraulic pump unit and controller sound isolation.

    p. Seismic safety valve.

    q. Pad hooks and vinyl-covered pads.

    r. Battery pack emergency car lighting. Provide separate constant pressure test button in car service compartment. Illuminate portion of normal car lighting.

s. No visible company name or logo on any equipment viewable by passengers.

t. Auxiliary car operating panel for dual entry elevators.

u. Wiring diagrams, operating instructions, and parts ordering information.

v. System Diagnostic Equipment and instructions: The elevator installation shall be a design that can be maintainable by any licensed elevator maintenance company employing journeymen mechanics, without the need to purchase or lease additional diagnostic devices, special tools, or instructions from the original equipment manufacturer:

1) Provide onsite capability to diagnose faults to the level of individual circuit boards and individual discreet components for the solid-state elevator controller.

2) If the equipment for fault diagnosis is not completely self-contained within the controllers but requires a separate, detachable device, that device shall be furnished to Sound Transit as part of this installation. Such device shall be in possession of and become property of Sound Transit:

a) Installed equipment not meeting this requirement shall be removed and replaced with conforming equipment at no cost to Sound Transit.

w. L&I Elevator Access Box: High Security Fire Key Box by Quality Elevator Products, Inc. Model SKB-2011 or approved equal. Color: Stainless steel #4 finish cover. Custom Label: “ELEVATOR”. Provide Department of Labor & Industries elevator key cylinder. Locate box as shown on drawings. Refer to Architectural drawings for location.

x. Firefighters' Key Box: Knox-Box Elevator Key Box 1400 Series recessed mount and recessed mounting kit or approved equal. Color: Red. Engrave instructions for use on cover in accordance with Local Fire Authority requirements. Locate box as shown on drawings. Refer to Architectural drawings for location.

y. Keys for elevator access and car operating panel in the machine room.

z. Signage engraving filled with black paint or approved etching process.

28. Etched stainless steel support signs, interior cab only:

a. Material: Stainless steel, etched copy and icon. Attached to interior elevator walls with VHB and silicone.

b. Thickness: 1/8 inch thick with eased edges.

c. Size: 3-inch x 1-1/4-inch.

d. Braille message: Stainless steel braille beads applied below 1/32-inch raised copy and Grade II braille.

e. Color: Reverse etched stainless steel, negative space is painted black.

C. Car - General:

1. Car Speed: plus or minus 10 percent of contract speed under all loading condition.

2. Car Capacity: Safely lower, stop and hold up to 125 percent of rated load.

3. Car Stopping Zone: plus or minus 1/4 inch under any loading condition.

4. Door Opening Time: Seconds from start of opening to fully open:

    a. Two speed, side opening: 2.7 seconds.

    b. Single speed, center opening: 1.8 seconds.

5. Door Closing Time: Seconds from start of closing to fully closed:

    a. Two speed, side opening: 4.0 seconds.

    b. Single speed, center opening: 2.8 seconds.

6. Car Ride Quality

    a. Horizontal acceleration within car during all riding and door operating conditions.

    b. Not more than 20 mg peak to peak in the 1 10 Hertz range.

    c. Acceleration and Deceleration: Smooth constant and not more than 5 feet/second/second with an initial ramp between 0.5 and 0.75 second.

7. Sustained Jerk: Not more than 8 feet/second/second/second.

8. Pressure: For in ground systems fluid system components shall be designed and factory tested for 500 psi. Maximum operating pressure shall be 400 psi. For hole-less dual telescoping jacks, pressure to be designed per the conditions and manufacturers operating requirements- coordinate with ST.

9. Noise and Vibration Control:

    a. Airborne Noise: Measured noise level of elevator equipment and its operation shall not exceed 50 dBA in elevator lobbies.

    b. Noise level in cab shall not exceed 55 dBA for continuous noise or 60 dBA for intermittent noise under any condition including door operation and car ventilation exhaust blower on its highest speed:

        1) All dBA readings to be taken 5 feet off the floor and 1 foot from the wall using the “A”-weighted scale.

        2) Vibration Control: All elevator equipment provided under this Contract, including power unit, controller, oil supply lines, and their support shall be mechanically isolated from the building structure and electrically isolated from the building power supply and to each other to minimize the possibility of objectionable noise and vibrations being transmitted to occupied areas of the building.

    c. Limit noise level in the machine room relating to elevator equipment and its operation to no more than 80 DBA:

        1) All DBA readings to be taken 3 feet off the floor and 3 feet from the equipment using the “A”-weighted scale.

D. Car Equipment:

1. Frame: Welded or bolted, rolled or formed steel channel construction to accommodate load classification requirements.

2. Platform: Constructed of stainless-steel frame with 1/4-inch stainless steel deck. Design and construct to accommodate load classification requirements. Wood construction not permitted.

3. Guide Shoes: Roller type with three or more spring dampened, sound-deadening rollers per shoe. Guide shoes to be designed for the load classification requirements.

4. Finish Floor Covering: 1/4-inch-thick resin epoxy flooring with high solids with colored rubber chips in a troweled mortar system. “SoftTop” Decorative Flooring by General Polymers or approved equal, with “Shark-Grip” Slip Resistant additive to meet coefficient of friction. Color as selected by the Resident Engineer from the manufacturer’s standard.

5. Sills: Extruded stainless steel without extruded extension between car entrance columns to face of car front return. Cast-in-place concrete between sill and tactile warning surface.

6. Toe Guard: Minimum 14-gauge stainless steel, reinforced and braced to car platform, with random orbital finish.

7. Doors: Provide as specified for hoistway entrance doors.

8. Door Hangers: Two-point hanger roller with neoprene roller surface and suspension with eccentric up thrust roller adjustment.

9. Door Track: Bar or formed, cold-drawn removable steel track with smooth roller contact surface.

10. Door Header: Construct of minimum 12-gauge steel, shape to provide stiffening flanges.

11. Door Electrical Contact: Prohibit car operation unless car door is closed within tolerance allowed by Code.

12. Door Clutch: Heavy-duty clutch, linkage arms, drive blocks, and pickup rollers or cams to provide positive, smooth, quiet door operation. Design clutch so car doors can be closed while hoistway doors remain open.

13. Restricted Opening Device: Restrict opening of car doors outside the unlocking zone.

14. Door Operator: High speed, heavy-duty, master door operator capable of opening doors at no less than 2.5 feet per second. Accomplish reversal in no more than 2-1/2 inches of door movement. Open doors automatically when car arrives at a floor. Provide solid state door control with closed loop circuitry to constantly monitor and automatically adjust door operation based upon velocity, position, and motor current. Maintain consistent, quiet, and smooth door operation at all floors regardless of door weight or varying air pressure. Basis of Design: GAL MOVFR or approved equal.

15. Door Control Device:

    a. 3D Infrared Reopening Device: Must meet ASME A.17.1-2019 Black, fully enclosed device. Full screen infrared matrix or multiple beams extending

vertically along edge of each leading door panel to minimum height of 7 feet above finished floor. Device shall prevent doors from closing and reverse doors at normal opening speed if beams are obstructed while doors are closing, except during nudging operation. If device fails, provide for automatic shutdown of car at floor level with doors open.

b. Nudging Operation: After beams of door control device are obstructed for a predetermined time interval (minimum 20.0-25.0 seconds), warning signal shall sound and doors shall attempt to close with a maximum of 2.5 foot-pounds kinetic energy. Activation of the door open button shall override the nudging operation and reopen the doors.

c. Interrupted Beam Time: When beams are interrupted during initial door opening, hold door open a minimum of 3.0 seconds. When beams are interrupted after the initial 3.0 second hold open time, reduce time doors remain open to an adjustable time of approximately 1.0-1.5 seconds after beams are reestablished.

d. Differential Door Time: Provide separately adjustable timers to vary time that doors remain open after stopping in response to calls:

1) Car Call: Hold open time adjustable between 3.0 and 5.0 seconds.

2) Hall Call: Hold open time adjustable between 5.0 and 8.0 seconds. Use hall call time when car responds to coincidental calls.

16. Car Operating Panel

a. One car operating panel without faceplate, consisting of a metal box containing the operating vandal resistant fixtures, mounted behind the car enclosure swing return panel(s):

1) Panel shall be located as detailed in the Issued for Construction Drawings and as required by entrance type.

b. Suitably identify vandal resistant assemblies including floor buttons, alarm button, door open button, door close button and emergency stop switch with SCS, Visionmark or Entrada Cast Tactile symbols recessed flush mounted. Configure plates in accordance with Local Accessibility Standards, WAC 296-96-02495, including Braille. Locate operating controls no higher than 48 inches above the car floor; no lower than 35 inches for stop device and alarm button.

c. Provide minimum 3/4-inch diameter raised floor pushbuttons that illuminate to indicate call registration. Include 5/8-inch high designation of the floors served directly to the left of the pushbutton. Provide keyswitches to activate floor pushbuttons at intermediate levels. Platform and surface levels to have pushbutton only:

1) Elevator car call buttons shall indicate floor levels consistent with Sound Transit's standard floor identification as follows:

a) P = Platform Level.

b) M = Mezzanine Level (1, 2, 3, etc.).

c) B = Basement Level (1, 2, 3, etc.).

d) S = Surface Level.

d. Provide alarm button at bottom of car operating panel to ring bell located on car, and sound distress signal at control panel. Illuminate button when activated.

e. Provide keyed stop switch with markings to show “run” and “stop.” Locate in locked service compartment.

f. Provide “door open” button to stop and reopen closing doors or hold doors in open position. Button operable only while car is stopped at a floor regardless of special operational features, except firefighters’ service.

g. Provide “door close” button to activate door close cycle. Cycle shall not begin until normal door dwell time for a car call has expired, except firefighters’ service.

h. Provide locked Firefighters’ Emergency Operation Panel, openable by the same key which operates the Fire Operation switch. Including the following features:

1) Phase II fire access switch.

2) Firefighters’ visual indication.

3) Call cancel button.

4) Stop switch, manually operated.

5) Door open button.

6) Door close button.

7) Floors served.

i. Provide firefighters’ telephone jack with bezel matching adjacent controls.

j. Provide lockable service compartment with recessed flush door. Door material and finish shall match car return panel or car operating panel faceplate. Door shall contain an integral flush window for displaying the elevator-operating certificate. Inside surface of door shall accommodate mounting provisions for certificate.

k. Include the following controls with function and operating positions identified by engraved signage painted black:

1) Inspection switch.

2) Light switch.

3) 2-speed exhaust blower switch.

4) Independent service switch.

5) Constant pressure test button for battery pack emergency lighting.

6) 120-volt, AC, GFCI protected electrical convenience outlet.

7) Stop switch.

l. Provide black paint filled (except as noted), engraved, or approved etched signage as follows with approved size and font:

1) Car number on main car operating panel.

2) “No Smoking” on main car operating panel.

3) Car capacity in pounds on service compartment door.

4) Phase II firefighters’ operating instructions on inside face of firefighters’ compartment door.

5) Engrave filled red “Firefighters’ Operation” on outside face of compartment door.

17. Car Top Control Station: In accordance with Code. Control station shall be provided with GFCI protected outlet and work light; include on/off switch and lamp guard. An additional GFCI receptacle shall be mounted at bottom of car. Mount to provide utilization while standing in an upright position.

E. Car Enclosure:

1. Provide complete car enclosure as specified herein and detailed on Issued for Construction Drawings. Provide the following features:

a. Shell: Reinforced 14-gauge furniture steel. Apply sound deadening mastic to exterior.

b. Canopy: Reinforced 14-gauge furniture steel with lockable, hinged emergency exit. Interior finish white reflective baked enamel.

c. Front and Rear Return Panels and Integral Entrance Columns: Reinforced 14-gauge non-directional finish stainless steel. Swing entire unit on substantial pivot points (minimum three) for service access to car operating panel(s). Locate pivot points to provide full swing of front return panel without interference with sidewall finish or handrail. Secure in closed position with concealed three-point latching. Provide service compartment with recessed flush cover and cutouts for operating switches.

d. Transom: Reinforced 14-gauge non-directional finish stainless steel full width of enclosure.

e. Car Door Panels: Minimum reinforced 16-gauge non-directional finish stainless steel. Same construction as hoistway door panels.

f. Base: Non-directional stainless steel with concealed ventilation cutouts. Cutouts to be protected from penetration by debris or liquids.

g. Interior Wall Finish: Non-directional finish stainless steel on aluminum honeycomb panels. As specified and as indicated. Refer to architectural drawings for details of elevator cab interiors including metal and glass panel installations.

h. Ventilation: Two speed exhaust blower mounted to car canopy on isolated rubber grommets. Man-D-Tec MVS-AA,, Model AA with diffuser and grille or approved equal.

i. Lighting: Provide minimum average 15 foot-candle illumination at car floor utilizing high output LED fixtures. Provide battery standby power for

operation. Provide fixtures with wiring and hookup. Coordinate with emergency lighting requirements. Provide emergency lighting integral with portion of normal car lighting system. Include required transformer:

1) All fixtures shall be above the ceiling and not allow removal without special tools. Fixture replacement shall be able to be performed from within the elevator cab by non-elevator maintenance personnel.

j. Suspended Ceiling: Special design as shown in the Issued for Construction Drawings.

k. Handrails: 1-1/2-inch diameter stainless steel tubes.

F. Operation:

1. Simplex Automatic for single elevators, Selective Collective for elevators located in groups:

a. Approved microprocessor-based, group dispatch, car and motion control systems as follows including, as a minimum, the features described hereafter:

1) MCE Motion 2000.

2) Schindler Miconic HX.

3) Otis Elevonic.

4) Thyssenkrupp TAC 32.

5) Smartrise.

6) Elevator Controls Corp, Pixel.

b. Operate cars as a group, capable of balancing service and providing continuity of group operation with one or more cars removed from the system.

c. Register service calls on cars from pushbuttons located at each floor and in each car. Slow down, and automatically stop cars at landings corresponding to registered calls. Make stops at successive floors for each direction of travel irrespective of order in which calls are registered except when bypassing hall calls to balance and improve overall service; stop only one car in response to particular hall call. Assign hall calls to specific cars, and continually review and modify these assignments to improve service. Simultaneous to initiation of slowdown of a car for a hall call, cancel that call. Render hall pushbutton ineffective until car doors begin to close after passenger transfer. Cancel car calls in the same manner. Give priority to coincidental car and hall calls in car assignment.

d. Operate system to meet changing traffic conditions on a service demand basis. Include provisions for handling traffic, which may be heavier in either direction, intermittent or very light. As traffic demands change, automatically and continually modify group and individual car assignment to provide the most effective means to handling traffic conditions. Assign hall calls to individual cars, continually review and update assignments; provide means to sense long wait hall calls and preferentially serve them; give priority to coincidental car and hall calls in hall call assignment and accomplish direction reversal without closing and reopening doors.

e. Use easily re-programmable system software. Design basic algorithm to optimize service based on equalizing system's response to registered hall calls and equalizing passenger trip time to shortest possible time.

f. Required Features:

1) Dispatch Protection: Backup dispatching shall function in the same manner as the primary dispatching.

2) Delayed Car Removal: Automatically remove delayed car from group operation.

3) Position Sensing: Reset car position when passing or stopping at each landing.

4) Hall Pushbutton Failure: Multiple power sources and separate fusing for pushbutton risers.

5) Duplicate communication link: All group and individual car computers.

2. Do not reverse car direction until all car calls have been answered or until all hall calls ahead of car and corresponding to direction of car travel have been answered.

3. Illuminate appropriate pushbutton to indicate call registration. Extinguish light when call is answered.

4. Other Items:

a. Low-Oil Control: In the event oil level is insufficient for travel to the top floor, provide controls to return elevator to the main level and park until oil is added.

b. Independent Service: Provide controls for operation of each car from its pushbuttons only. Close doors by constant pressure on desired destination floor button or door close button. Open doors automatically upon arrival at selected floor.

c. Auto Operation: Provide field adjustable intermittent automatic operation, to be set initially for once every 3 hours through the entire run of the hoistway. Cycling shall be the full 24 hours each day throughout the year (or can be field adjusted). During such trips, elevator doors shall not open at any landing. Should a landing hall call be registered during auto operation the elevator shall stop auto operation and immediately respond to the hall call.

5. Firefighters' Service: Provide equipment and operation in accordance with Code requirements.

6. Automatic Stopping Zone: Stop car within 1/4 inch above or below the landing sill. Avoid overtravel/undertravel, and maintain stopping accuracy regardless of load in car, direction of travel, or distance between landings.

7. Motion Control: AC type with unit valve suitable for operation specified and capable of providing smooth comfortable acceleration and deceleration. Limit the difference in speed between full load and no load to not more than plus or minus 10 percent of the Contract speed.

8. Door Operation: Automatically open door when car arrives at main floor whether car call has been registered or not.

9. Standby Lighting and Alarm: Car mounted, battery unit with solid state charger to operate alarm bell and car emergency light fixture. Battery to be rechargeable with minimum 5-year life expectancy. Coordinate location of light fixture with Resident Engineer. Provide constant pressure test button in service compartment of car operating panel. Provide lighting integral with portion of normal car lighting system. Include required transformer.

10. Battery Lowering Device: Where emergency power is not provided, upon loss of normal power, provide controls to automatically lower the car(s) nonstop to the lowest landing. Upon arrival at the lowest landing, the elevator doors shall open automatically and remain open until regular door time has expired. The elevator shall then become deactivated. The standby power source shall be provided via 12-volt DC battery units installed in machine room, including solid-state charger and testing means mounted in a common metal container. Battery to be rechargeable lead-acid or nickel-cadmium with a 10-year life expectancy.

11. Provide standby battery power for cab fans. Battery and fans shall provide complete cab air change per minute for a minimum of 1 hour. Upon restoration of normal power, the elevator shall automatically resume normal operation.

12. Automatic Light and Fan Shut Down: The control system shall evaluate the system activity and automatically turn off the cab lighting and ventilation fan during periods of inactivity. The settings shall be field programmable.

13. Elevator Remote Disable: During non-revenue hours, public access to and use of the elevators shall be restricted. The elevators shall be provided with control systems to permit the Link Control Center (LCC) to shut down elevators during non-revenue hours and enable operation during non-revenue hours.

14. Sump High Water Sensor:

    a. Provide sump with water sensor tied to a remote alarm and the Building Management System. System to notify LCC if water has exceeded capacity of sump- Bus Rapid Transit stations and garages exclude.

G. Elevator Machine Equipment:

1. Arrange equipment in spaces shown on Issued for Construction Drawings.

2. Pump Unit: Assembled unit consisting of dry or submersible positive displacement pump, induction motor, master-type control valves combining safety features, holding, direction, bypass, stopping, manual lowering functions, shut off valve, oil reservoir with protected vent opening, oil level gauge, outlet strainer, drip pan, muffler, and all mounted on isolating pads.. When dry pump units are used, enclose entire unit with removable sheet steel panels lined with sound-absorbing material. Provide closed transition SCR soft start. Design unit for 120 upstarts per hour.

3. Pumping Unit Control Valve: The control valve shall be manifold with up, down and check valve sections. A control section including solenoid valves will direct the main valve and control up and down starting, transition from full speed to leveling speed, up and down stops, pressure relief and manual lowering. Down speed and up and down leveling shall be controlled at the main valve sections. All of these functions shall be fully adjustable for maximum smoothness and to meet Contract conditions. The manual lowering feature will permit lowering the elevator at slow speed in the event of power failure or for adjusting purposes.

4. Tank Heater: The tank shall be provided with a temperature sensor which continuously monitors the oil temperature and transmits this information to the controller. Provide a removable thermostatically controlled (min. 500 W) screwed on heater.

5. Oil Cooling System: The oil cooler shall be capable of removing 20,000 BTU/Hour and be provided with an adjustable thermostat. The unit shall be provided with a 10-micron filter in the oil line with a restriction sight glass with bypass in case of plugged filter. The unit shall be capable of being separated into two parts, a fan section and a pump section which can be remotely mounted from one another. The units shall be located in the elevator machine room so as not to inhibit access and maintenance of the elevator equipment.

6. Encoder: Direct drive, solid state or magnetic tape, absolute positioning.

7. Controller: UL/CSA labeled:

   a. Compartment: Securely mount all assemblies, power supplies, chassis switches, and relays, on a substantial, self-supporting steel frame. Completely enclose equipment with covers. Provide means to prevent overheating.

   b. Relay Design: Magnet operated with contacts of design and material to ensure maximum conductivity, long life, and reliable operation without overheating or excessive wear. Provide wiping action and means to prevent sticking due to fusion. Contacts carrying high inductive currents shall be provided with arc deflectors or suppressors.

   c. Use of SIL (Safety Integrity Level) rated devices for EPD (Electrical Protective Devices) where possible is preferred to traditional positively opened mechanical switches. These devices shall be listed/certified and labeled/marked to a SIL rating in accordance with the applicable requirements of IEC 61508-2 and IEC 61508-3 with a SIL rating equal to or greater than the SIL indicated for the applicable device shown in ASME A17.1.

   d. The detection of a dangerous fault (e.g. with diagnostic tests, proof-tests, or by any other means) in SIL rated electrical/electronic/programmable electronic system (E/E/PES, or commonly referred to as "PES") that can tolerate a single fault shall cause the elevator to revert to a known fail-safe condition. Where necessary, to maintain the integrity of the SIL rated PES and maintain the fail-safe condition prior to a second fault that could lead to a dangerous condition, a manual reset shall be required to remove the SIL rated PES from the fail-safe condition.

   e. Microprocessor Related Hardware:

      1) Provide built-in noise suppression devices that provide a high level of noise immunity on all solid-state hardware and devices.

      2) Provide power supplies with noise suppression devices.

      3) Isolate inputs from external devices (such as pushbuttons) with opto-isolation modules.

      4) Design control circuits so that one side of power supply is grounded.

5) Safety circuits shall not be affected by accidental grounding of any part of the system.

6) System shall automatically restart when power is restored.

7) System memory shall be retained in case of power failure or disturbance.

8) Equipment shall operate properly with a 500 kHz to 1300 MHz radio frequency signal, transmitted at a power level of not less than 100 watts Effective Radiated Power (ERP) at a distance of 3 feet.

9) Equipment shall be provided with Electro Magnetic Interference (EMI) shielding within FCC guidelines.

f. Wiring: CSA labeled copper for factory wiring. Neatly route all wiring interconnections and securely attach wiring connections to studs or terminals.

g. Provide controller or machine mounted auxiliary, lockable “off” disconnect if mainline disconnect not in sight of controller and pump unit.

h. Permanently mark components (relays, fuses, and PC board,) with symbols shown on wiring diagrams.

i. Provide reduced voltage motor starting circuits with solid-state motor starter.

8. Muffler: Provide in discharge oil line near pump unit. Design shall dampen and absorb pulsation and noise in the flow of hydraulic fluid.

9. Piping and Oil: Provide piping, connections, and oil for the system. All piping to be ASTMA53, Grade B, seamless schedule 80 steel or better. All piping shall have threaded/welded fittings except that a mechanical coupling shall be provided at the discharge of the power unit and at the connection to the safety valves in the pit. Mechanical fittings shall be Victaulic Type 77, with grade T gaskets or approved equal. Buried piping shall be secondarily contained with watertight Schedule 40 PVC sleeves between elevator machine room and pit. Thermostatically controlled heat tracing and insulation shall be provided for all piping which is exposed to the outdoors, or which is indicated to be insulated on the Issued for Construction Drawings. A minimum of two sound isolation couplings shall be provided between the pump unit and oil line and the oil line and jack unit. Provide isolated pipe stands or hangers as required.

10. Connection to Remote Monitoring Interface Terminal Cabinet:

a. Provide conduit and wiring between the elevator controller and the interface terminal cabinet for remote monitoring and control of each car by the Building Management System:

1) Refer to Electrical drawings for interface terminal cabinet locations.

2) Receive the following dry contact inputs to effect the following control actions for each car:

a) Phase 1 Recall – Primary (from fire alarm panel).

b) Phase 1 Recall – Alternate (from fire alarm panel).

c) Access control permissive.

d) Elevator Remote Disable.

3) Provide normally open dry contacts for each of the following status items for each car:

a) Elevator Warning Alarm.

b) Passenger Alarm Pushbutton.

c) Phase 1 Fire Operation.

d) Phase 2 Fire Operation.

e) Elevator door closed.

f) Independent Service.

g) Elevator at floor (one contact per floor).

b. Provide conduit and wiring between the hoistway sump, high water sensor and the interface terminal cabinet for remote monitoring by the Building Management System:

1) Provide normally open dry contact for each of the following status items for hoistway:

a) Sump high water alarm

H. Hoistway Equipment:

1. Guide Rails: Planed steel T-sections of suitable size and weight for the application, structural support spacing, car weight, and seismic reactions, with brackets for attachment to building structure.

2. Buffers: Spring type with blocking and supports.

3. Hydraulic Jack Assembly:

a. In Ground Hydraulic:

1) Seamless steel pipe. Design head to receive unit-type packing and provide means to collect oil at cylinder head and return automatically to oil reservoir.

2) Provide secondary containment/cylinder protection.

b. Plungers:

1) Polished seamless steel tubing or pipe.

2) If plunger length exceeds 24 feet – 0 inches, provide two or more sections not exceeding 16 feet – 0 inches in length, or coordinate installation of longer unit at the jobsite.

3) Join sections by internal threaded couplings.

4) Multiple section jack units shall be factory polished while assembled and marked.

5) Isolate plunger from car frames.

c. Jack Support and Fluid Shut-Off Valves:

1) Provide steel pit channels to support jack assembly and transmit loads to building structure.

2) Provide intermediate stabilizers as required.

3) Provide manual on/off valves in oil lines adjacent to pump unit and jack units in pit.

d. Well Hole and Casing:

1) Well hole is to be provided by Elevator Contractor. No additional compensation will be allowed for unforeseen conditions of any kind or spoil removal.

2) Install steel outer casing minimum 18" diameter.

3) Install Schedule 80 watertight sleeve over jack assembly for secondary containment prior to installing jack assembly into the outer casing. Extend PVC sleeve through pit floor slab to underside of jack support beams and seal with non-permeable membrane. Seal well opening at the pit floor with hydraulic quick setting cement. Provide PVC vision/access ports.

4) Volume of PVC sleeve shall be capable of containing 110% of system fluid capacity plus jack assembly.

e. Overspeed Valves:

1) Provide a pressure sensitive, mechanically actuated, seismic safety valve.

2) Connect valve directly to jack assembly inlet.

f. Hole-less Assembly-Seamless steel pipe. Two hydraulic cylinders designed to stand upright on the pit floor on either side of the car. Design head to receive unit-type packing and provide means to collect oil at cylinder head and return automatically to oil reservoir. The cylinder shall be finished with rust-inhibiting air-dry enamel. Apply two coats by brush, or spray according to manufacturer’s recommendations.

g. Each cylinder shall have a machined steel flange at the upper end and a heavy steel bulkhead at the lower end.

h. A packing gland with guide bearing, wiper ring and packing especially designed for the hydraulic elevator service shall be mounted at the top of each cylinder along with an oil collector ring and drain hole. The plunger seals shall be urethane cup design with integral wipers or approved equal. Replace the packing glands after all construction is completed.

i. Provide a thermostatically controlled insulated heat tracing assembly on each cylinder to maintain the operating temperature of the oil within acceptable manufacturer’s operating range. Provide product details, ambient operating temperature guidelines and design drawings for review and approval.

j. Plungers: Polished seamless steel tubing or pipe. The plunger surface shall be a minimum of 20 micro inches RMS and shall not exceed 35 micro-inches RMS for the entire plunger length in engagement with the cylinder seals. A stop ring electrically welded to the plunger to positively prevent the plunger from leaving the cylinder. If plunger length exceeds 24 feet, provide two or more sections not exceeding 16 feet in length, or coordinate installation of longer unit at the jobsite. Join section by internal threaded couplings. Multiple section jack units shall be factory polished while assembled and marked for proper future reassembly. Isolate plunger from car frame(s). Each piston in multi-stage jacks to have individual head bearings and packing gland assemblies.

k. Equalization: Provide direct mechanical means of equalizing position and speed of plungers. If speed and position of cylinders are not synchronized the elevator shall self-correct by auto-lowering to lowest floor and restarting. If after two attempts to readjust the position and or speed the plungers are not synchronized the elevator shall shut down.

l. Auxiliary Guides: Plungers shall be provided with an auxiliary guide means as per the manufacturer's recommendations to maintain the alignment of the jack assembly.

4. Jack Support and Fluid Shut-Off Valve(s): Provide steel pit channels and support beams (if required) to support jack assembly and transmit loads to building structure. Provide intermediate stabilizers as required. Provide manual on/off valve(s) in oil line(s) adjacent to pump unit and jack unit(s) in pit adjacent to jack unit(s). Provide a pipe rupture valve; it shall be located as close as possible to the cylinder inlet. In the event of failure in the pipe line or where the down speed exceeds allowable limits, the rupture valve shall close, bringing the car to a smooth stop.

5. Normal Terminal Stopping Devices: According to Code.

6. Copper Electrical Wiring and Wiring Connections:

a. Conductors and Connections: Copper throughout with individual wires coded and connections on identified studs or terminal blocks. Use no splices or similar connections in wiring except at terminal blocks, control compartments, junction boxes, or conduits. Provide 10 percent spare conductors throughout. Run spare wires from car connection points to individual elevator controllers in the machine room. Provide four pairs of spare shielded communication wires in addition to those required to connect specified items. Tag spares in machine room.

1) All wiring within hoistway shall be suitable for wet locations.

b. Conduit: Painted or galvanized steel conduit and duct. Conduit size, 1/2 inch minimum. Flexible conduit not to exceed 36 inches in length. Flexible heavy duty service cord may be used between fixed car wiring and car door switches for door protective devices:

1) All raceways and wiring mounted on the top of the elevator shall be suitable for wet locations. The routing of the raceways or conduit shall be routed to preclude damage from being stepped on during maintenance. If this is not possible provide steps or other additional protection.

c. Traveling Cables: Type ET flame and moisture resistant outer cover. Prevent traveling cable from rubbing or chafing against hoistway or

equipment within hoistway. Refer to “special elevator equipment” for list for spares to be included in traveling cables.

I. Entrance Equipment

1. Door Hangers: Two-point hanger roller with neoprene roller surface and suspension with eccentric up thrust roller adjustment.

2. Door Tracks: Bar or formed, cold drawn removable steel tracks with smooth roller contact surface.

3. Door Interlocks: Operable without retiring cam. Paint interlocks flat black.

4. Door Closers: Spring, spirator, or jamb/strut mounted counterweight type. Design and adjust to ensure the smooth quiet mechanical close of doors.

5. Floor Numbers: Stencil paint 4-inch-high floor designations in contrasting color on inside face of hoistway doors at each landing and adjacent to the leading edge of the door.

J. Special Elevator Equipment: The elevators shall accommodate communication subsystem equipment which shall be provided by the Contract. This equipment and its appurtenances shall be built into the elevator at the factory, unless noted otherwise:

1. CCTV Cameras: Provide and Install two cameras for each elevator:

a. Axis P3364-VE or approved equal.

b. Imaging device: 1/3-inch color CMOS 3-9 mm, vari-focal, auto iris lens.

c. Ability to control and monitor video over IP network.

d. Supported protocols: TCP/IP, UDP/IP (unicast, multicast IGMP), UPnP, DNS, DHCP, RTP, NTP.

e. Supported video resolutions: 4CIF, 2CIF, CIF, QCIF.

f. Digital compression: MJPEG, MPEG-4.

g. Web user interface with up to five simultaneous users.

h. Cameras to support low-light capability.

i. Camera shall be connected by CAT6 to an Ethernet PoE switch located in a Contractor supplied enclosure attached to the elevator cab.

2. CCTV Camera Enclosure: Provide and Install for each CCTV Camera:

a. Install CCTV cameras with protective housings.

b. Mini-dome with integrated camera and lens.

c. Tamper resistant hardware.

d. Rugged, high-impact, puncture-proof, opaque (smoked) dome plastic.

e. NEMA 4X and IP 66.

f. Input voltage: 18 - 30VAC, 24 VAC nominal.

g. Above ceiling dimensions: 2 inches high by 3.5 inches wide, nominal.

h. Below ceiling dimensions: 2.5 inches high by 5.5 inches wide, nominal.

i. Dome diameter: 3.75 inches, nominal.

j. Cable: RJ45-10 connector for 100Base-TX Ethernet.

3. Emergency Communication System: Complying with ASME A17.1 and the U.S. Architectural & Transportation Barriers Compliance Board's "Americans with Disabilities (ADA), Accessibility Guidelines (ADAAG)":

a. "Push to Call," two-way communication instrument in car with automatic dialing, tracking, and recall features with shielded wiring to car controller in machine room. Provide dialer with automatic rollover capability with minimum two numbers.

1) "Push to Call" button or adjacent light jewel shall illuminate and flash when call is acknowledged. Button shall match car operating panel pushbutton design. Provide uppercase "PUSH TO CALL," "HELP ON THE WAY" engraved signage adjacent to button.

2) Provide "Push to Call" button tactile symbol, engraved signage, and Braille adjacent to button mounted integral with car front return panel.

b. Communication for Deaf, Hard of Hearing and Speech Impaired: On the same car operating panel as the phone pushbutton, provide capability to communicate with and obtain responses from passengers, including those passengers who cannot communicate verbally or hear.

c. Provide display video capability for entrapment assessment.

d. Provide two-way communication between car and machine room.

e. On activation, system dials preprogrammed number of monitoring station and identifies elevator location to monitoring station.

f. System provides two-way voice communication without using a handset and provides visible signals that indicate when system has been activated and when monitoring station has responded.

g. System is contained in flush-mounted cabinet, with identification, and instructions for use.

4. PA Speakers:

a. Provide and install an 8-ohm public address speaker in the car canopy and connect via speaker cabling to Contractor provided PA terminals in the interface terminal cabinet.

b. Provide and install Atlas UKT speakers, 95-8-7 backbox, FAMT-6 adapter plate and 60-8A round satin aluminum finish grill or approved equal.

5. Radio Antenna: Provide mounting provisions for Commprod antenna in the elevator cab ceiling. Provide cabling from the car to the interface terminal cabinet. The antenna must be installed only If AHJ requires it:

a. Where AHJ does not require a radio in the cab, designer must confirm there is adequate cell coverage at location of elevator. In the event that there is not adequate cell coverage, radio antenna per above must be provided.

6. For elevators requiring access to non-public floors: Provide and install Lenel 2210 door controller mounted in the NEMA 4X enclosure.

7. For elevators requiring access to non-public floors: Provide and install HID iClass R40 card reader in the elevator cab.

8. ST-provided PoE Ethernet Switch:

    a. Install ST-provided PoE Ethernet switches.

    b. One switch shall be installed in the elevator cab and the other in the Interface Terminal Cabinet.

    c. Minimum of eight ports.

    d. At least one fiber port for switch-to-switch connection.

    e. Connect door controller and cameras to the Ethernet switch via CAT6 cable.

    f. The Ethernet switch in the elevator shall be connected to the Ethernet switch in the Interface Terminal Cabinet via Contractor provided fiber optic cable in the travelling cable.

    g. Power for the switch shall be provided from station's Communications UPS power.

    h. Configuration settings from the Ethernet switch per Sound Transit IT department.

9. Elevator Cab Enclosure: provide a NEMA 4X enclosure, attached to the elevator cab, accessible from inside the cab, sized to install the door controller, Ethernet switch, and fiber distribution panel:

    a. Layout of devices shall provide easy maintenance access.

    b. Provide elevator power to all powered devices in the enclosure.

10. Communications Cabling and Wiring: Provide and install communications systems wiring within the traveling cable from car device to the elevator controller cabinet or the Interface Terminal Cabinet located. Land wiring on terminal blocks or connectors specifically made for the intended use. Provide and install conduit between elevator controller and the Interface Terminal Cabinet:

    a. All cabling to be plenum rated and shall be as follows:

        1) Elevator cab PoE ethernet switch to elevator machine room ethernet switch: 6-strand plastic (multi-mode), or glass (single mode) fiber optic cable. Terminate all strands of the fiber in an FDP with LC connectors on both ends. Provide patch cords from the FDP to the switches.

        2) The fiber cable provided and installed shall be rated so that it can withstand the repeated movement associated with the duty cycle of the elevator (to be noted in product data submittal) while also meeting the Sound Transit performance criteria noted below over the expected life of the traveling cables.

        3) Fiber Optic Performance Criteria:

a) Effective Minimum Bitrate (R) is two times the bandwidth (Δf): R [Mb/s] =2* Δf [MHz]

b) Attenuation Guidelines:

Glass Fiber	
Wavelength (nm)	**Attenuation Rate (db/km)**
1550	0.25
1625	0.25
Max Loss Budget Calculation	
Max Loss Budget [dB] =	(Length[km] * Attenuation Rate) + (Connector pairs * 0.25 dB) + (Number of splices * 0.25 dB)
Plastic Fiber	
Wavelength (nm)	**Attenuation Rate (db/m)**
650	0.2
Max Loss Budget Calculation	
Max Loss Budget [dB] =	(Length[m] * Attenuation Rate) + (Connector pairs * 2.5 dB) + (Number of splices * 2.5 dB)

b. Testing Requirements

1) Minimum Effective Bitrate of 2.5 Mb/sec.

2) Losses determined from OTDR testing within the calculated Max Loss Budget.

Example: 100-meter Elevator Traveling Cable Fiber Optic Criteria		
Fiber Material	**Effective Minimum Bitrate**	**dB Max. Loss Budget**
Plastic	2.5 Mb/sec	25.70 dB
Glass	2.5 Mb/sec	1.73 dB

3) Installing contractor shall demonstrate fiber optic performance via witnessed OTDR dB attenuation testing conducted in accordance with TIA-568-C.0 Compliant Fiber Optic Test Procedures. Fiber cable must meet the above performance upon initial testing and throughout the full life of the traveling cables.

4) Installing contractor to conduct testing for bandwidth to determine effective minimum bit rate over the fully connected traveling cable between nearest elevator machine room network connection switch

and cab network switch. Regardless of traveling cable length, the Effective Minimum Bitrate of 2.5Mb/sec is required.

5) Test results shall be provided to Sound Transit under Submittals.

c. Paging speaker: One copper pair 16 AWG.

d. Radio Antenna: One super flex 75-ohm coaxial cable.

e. Wiegand cabling from the door controller to the access card reader.

f. CAT6:

1) Elevator cab: from the cameras and door controller to the PoE Ethernet switch.

2) Interface Terminal Cabinet: from the PoE Ethernet switch to RJ45 jacks on the interface terminal cabinet.

g. Instrumentation: Minimum 6 shielded twisted pairs; minimum #18-gauge instrumentation cable.

h. Provide four pairs of spare shielded communication wires in addition to those required to connect specified items. Tag spares in machine room.

2.03 COMPONENTS

A. Hoistway Entrances:

1. Complete entrances bearing UL fire labels.

2. Frames: stainless steel at all floors. Standard bolted head to jamb connection assemblies fabricated from not less than 14-gauge material. Permanently attach rear mounted Arabic floor designation plates, centerline at 60 inches above finished floor, on both sides of jambs existing. Provide main egress landing plates with Star designation. Braille indications shall be below Arabic floor designation.

3. Track support 3/16-inch-thick steel track support plate shall extend between and be bolted to the vertical steel struts with a minimum of two bolts each end.

4. Door Panels: 16-gauge random orbital finish stainless steel, sandwich construction without binder angles.

a. Provide leading edges of side opening doors with rubber astragals. Provide a minimum of three gibs per panel, one at leading edge, one at trailing edge and one at center of leaf with gibs in the sill groove their entire length of travel.

b. Elevators in Rated Shaft: Provide safety glass vision panel approximately 4 inches by 20 inches in one panel of each door.

c. Elevators in Non-Rated Shaft: Provide 9/16-inch-thick laminated tempered glass approximately 16 inches by 72 inches in each door panel

5. Sight Guards: 14-gauge, same material and finish as hoistway entrance door panels. Construct without sharp edges.

6. Sills: Extruded nickel silver.

7. Sill Support Angles: Structural steel designed to support doorsill, based upon car loading classification protected from corrosion. Provide grout under the sill. Five-inch by 5-inch by 1/2-inch hot-rolled structural steel angle, extend full width of hoistway. Fasten to building structure at maximum 18 inches on center. Refer to Issued for Construction Drawings for additional details.

8. Fascia, Toe Guards, and Hanger Covers: 14-gauge furniture steel with Manufacturer's standard finish. Provide fascia, toe guards, and hanger covers for rear entrances. Provide fascia for express hoistway travel.

9. Struts and Headers: Provide for vertical support of entrances and related material.

10. Finish of Frames and Doors: Random orbital finish stainless steel.

B. Hall Control Stations:

1. Pushbuttons: Provide one riser with flush-mounted faceplates. Include pushbuttons for each direction of travel, which illuminate to indicate call registration. Include approved engraved message and pictorial representation prohibiting use of elevator during fire or other emergency situation as part of faceplate. Pushbutton design shall match car operating panel pushbuttons. Provide vandal resistant pushbutton and light assemblies. Circuit boards for hall call station switches shall be conformal coated.

2. Hoistway Door Unlocking Device: Provide unlocking device with a locking escutcheon in door panel plug at all floors, with finish to match adjacent surface.

3. Hoistway Access Switches: Mount in entrance frame side jamb at top and bottom floors. Provide fixture with faceplate.

4. Faceplate Material and Finish:

a. Hall Lantern: Non-directional stainless steel.

b. Car Position Indicator: Non-directional stainless steel.

c. Lobby Position Indicator: Non-directional stainless steel.

d. Hall Pushbutton Station: Non-directional stainless steel.

e. Hoistway Access Switch: Non-directional stainless steel

C. Signals:

1. Hall Lantern: Provide at each entrance to indicate travel direction of arriving car. Locate as detailed on Issued for Construction Drawings. Illuminate up or down lights and sound tone twice for down direction travel prior to car arrival at floor. Sound level to be adjustable from 20 80 dBA measured at 5 feet - 0 inches in front of hall pushbutton and 3 feet 0 inches off floor. Illuminate light until the car doors start to close. Provide advanced hall lantern notification to comply with ADA hall call notification time. Minimum 2-1/2 inches in the smallest dimension, arrow lenses with faceplates. Provide vandal resistant lantern and light assemblies consisting of series of dots or lines for maximum visibility.

2. Car Position Indicator: Alpha-numeric digital indicator containing floor designations and direction arrows a minimum of 1/2 inch high to indicate floor served and direction of car travel. Locate fixture in each car operating panel. When a car leaves or passes a floor, illuminate indication representing position of car in hoistway. Illuminate proper direction arrow to indicate direction of travel. Provide vandal resistant indicator and light assemblies.

3. Lobby Position Indicator: Alpha-numeric digital indicator containing floor designations and direction arrows a minimum of 1/2 inch high to indicate floor served and direction of car travel. Locate fixture integral with hall lanterns at Plaza level. When a car leaves or passes a floor, illuminate indication representing position of car in hoistway. Illuminate proper direction arrow to indicate direction of travel. Provide vandal resistant indicator and light assemblies.

4. Floor Passing Tone: Provide an audible tone of no less than 20 decibels and frequency of no higher than 1500 Hz, to sound as the car passes or stops at a floor served.

5. Voice Synthesizer: Provide electronic device with easily re-programmable message and voice to announce car direction, floor, and emergency exiting instructions.

6. Card reader override: Provide conduit and wiring to control panel. Fixtures shall be located as directed by the Resident Engineer. Coordinate size and location.

7. Fire Fighters' Control Panel: Within tunnel stations (or otherwise required by AHJ) locate in the station's Fire Command Center Room. Furnish and install panel and all applicable wiring from each elevator to the fire panel. All supplied conductors shall conform to the requirements of NFPA 130. Associated conduit to be provided by Electrical. Fixture faceplate, No. 4 brushed finish stainless steel, including the following features:

   a. Car position and direction indicator (digital readout or color SVGA display type). Identify position indicator with car number.

   b. Indicator showing operating status of car.

   c. Wiring to panel. Conduit from closest elevator hoistway of each group by others.

   d. Two position fire fighter's emergency return switches and indicators with engraved instructions filled with red epoxy paint.

8. Communication Failure: Provide phone line communication failure indicator light and reset keyswitch integral mounted within hall control station located at the primary phase 1 recall landing.

2.04 SEISMIC OPERATIONS AND EQUIPMENT

A. Provide design, components, and operation in accordance with ASME A17.1, Part XXIV.

PART 3 - EXECUTION

3.01 EXAMINATIONS

A. Prior to beginning installation of equipment, examine hoistway and machine room areas. Verify that no irregularities exist that affect execution of work specified. Hoistway and pit to be evaluated and confirmed as sealed and waterproofed prior to commencing installation of elevator equipment.

B. Do not proceed with installation until work in place conforms to Contract requirements.

3.02 INSTALLATION

A. Install all equipment in accordance with manufacturer's instructions, referenced Codes, these Specifications and approved submittal.

B. Install machine room equipment with clearances in accordance with referenced Codes and these Specifications.

C. Install all equipment so it may be easily removed for maintenance and repair.

D. Install all equipment for ease of maintenance.

E. Install all equipment to afford maximum accessibility, safety, and continuity of operation.

F. Replace or refurbish all material to meet performance requirements outlined in this Section prior to station operation. There will be an extended period of time from the point that the elevators are installed to the final acceptance and station normal operation.

G. Remove oil, grease, scale, and other foreign matter from the following equipment and apply one coat of field-applied machinery enamel:

1. All exposed equipment and metal work installed as part of this work that does not have architectural finish.

2. Machine room equipment, hoistway equipment including guide rails, guide rail brackets, and pit equipment.

3. Neatly touch up damaged factory-painted surfaces with original paint and color. Protect machine-finish surfaces against corrosion.

3.03 FIELD QUALITY CONTROL

A. Perform tests required by the elevator Section of the Washington State Department of Labor and Industries. Perform tests in accordance with procedures described in ASME A17.2.1 inspector's manual for Electric Elevators and as required by the authorities having jurisdiction in the presence of the Resident Engineer.

B. Contractor is not relieved from furnishing and installing work shown or specified which may be beyond requirements of ordinances, laws, regulations or codes.

C. Work at jobsite will be checked during course of installation. Full cooperation with reviewing personnel is mandatory. Accomplish corrective work required prior to performing further installation.

D. Have Code Authority acceptance inspection performed and complete corrective work.

3.04 ADJUSTMENTS

A. Install rails plumb and align vertically with tolerance of 1/16 inch in 100 feet - 0 inches. Secure joints without gaps and file all irregularities to a smooth surface.

B. Static balance car to equalize pressure of guide shoes on guide rails.

C. Lubricate all equipment in accordance with manufacturer's instructions.

D. Adjust motors, valves, controllers, leveling switches, limit switches, stopping switches, door operators, interlocks, and safety devices to achieve required performance levels.

3.05 CLEANING

A. Keep work areas orderly and free from debris during progress of Contract. Remove packaging materials on a daily basis.

B. Remove all loose materials and filings resulting from work.

C. Clean machine room equipment and floor.

D. Clean hoistways, car, car enclosure, entrances, and operating and signal fixtures per submitted procedure as required to meet sign off requirements of L&I.

3.06 DEMONSTRATION

A. General: Furnish labor, materials, and equipment necessary for tests. Notify Resident Engineer 5 days in advance when ready for final review of unit or group. Final acceptance of installation will be made only after all field quality control reviews have been completed, identified deficiencies have been corrected, all Sound Transit's information and certificates have been received, and the following items have been completed to satisfaction of Resident Engineer.

1. Workmanship and equipment comply with these Specifications.

2. Contract speed, capacity, floor to floor, and door performance comply with these Specifications.

3. Performance of following are satisfactory:

a. Starting, accelerating, running.

b. Decelerating, stopping accuracy.

c. Door operation and closing force.

d. Equipment noise levels.

e. Lighting levels.

f. Signal fixture utility.

g. Overall ride quality.

h. Performance of door control devices.

i. Operations of special security operation and floor lock-off provisions.

j. Demonstrate CCTV Camera image on computer connected to data cable to Interface Terminal Cabinet.

k. Demonstrate that PA system works by connecting to an amp and broadcasting voice over speaker.

l. Demonstrate phone installation by dialing designated ST control center.

m. Demonstrate each monitoring and control signal to Building Management System at Interface Terminal Cabinet.

4. Test Results:

a. In all test conditions, obtain specified speed, performance times, stopping accuracy without re-leveling, and ride quality to satisfaction of the Resident Engineer.

b. Temperature rise in motor windings limited to 120 degrees F above ambient. A full-capacity, 1-hour running test, stopping at each floor for 10 seconds in up and down directions, may be required.

B. Performance Guarantee: Should tests reveal defects, poor workmanship, variance or noncompliance with requirements of specified Codes and/or ordinances, or variance or noncompliance with the requirements of these Specifications, complete corrective work to satisfaction of Resident Engineer at no cost:

1. Replace equipment that does not meet Code or these Specifications requirements.

2. Perform work and furnish labor, materials, and equipment necessary to meet specified operation and performance.

3. Perform and assume cost for retesting required by Governing Code, Authority, and Sound Transit to verify specified operation and/or performance.

C. Field Review Scheduling: Schedule progress and final equipment reviews with Resident Engineer. Reply promptly, in writing, to corrective work indicated on Resident Engineer's progress and/or final review reports, indicating status, schedule for completion, and questions.

3.07 TRAINING

A. Provide orientation and training to familiarize Sound Transit operations personnel with the features and operation of the elevator.

1. Include step-by-step instructions for elevator operations, controls and features, including procedures for locking down elevators when not in service.

2. Training shall include complete familiarization of the elevator and elevator machine room, including components installed within the machine room.

3. Provide training materials that detail step-by-step instructions of elevator operations for use in future familiarization training of personnel.

3.08 COMMISSIONING

A. Refer to specifications Section 14 08 00 Commissioning of Conveying Equipment for further requirements pertaining to the work in this Section.

END OF SECTION

SECTION 14 31 00

ESCALATORS

PART 1 - GENERAL

1.01 SUMMARY

A. Section includes:

1. Requirements for furnishing and installing heavy duty escalators as specified and as detailed on the Issued for Construction Drawings, including maintenance as described herein.

B. Related Work Specified Elsewhere:

1. Wellway and Pit:

a. Clear, plumb, wellway with variations not to exceed 1 inch at any point.

b. Floor pockets and/or structural beams for support of escalator truss at each end and at intermediate locations as shown on the Issued for Construction Drawings. Support beam deflection shall not exceed 1/1666 of span under static load.

c. Fire resistive enclosure of escalator truss including ends, sides, and bottom in ceiling plenum.

d. Patching and finishing around escalator landing plates after installation.

e. Cladding and finishing of exposed truss surfaces.

f. Waterproof pit. All escalator pits shall be provided with indirect drains to prevent accumulation of water.

g. Protect open wellways during construction in accordance with OSHA regulations.

h. Protect escalator truss, steps, landing plates, balustrades, handrails, and special metal finishes from damage.

i. Venting or other means to prevent accumulation of smoke and gas in escalator truss as required by Local Building Code.

j. Fire sprinklers in accordance with local Code requirements with protective guards.

2. Electrical Service, Conductors, and Devices:

a. Light with guard and Ground Fault Circuit Interrupter (GFCI) convenience outlet in each pit and machine room space. Provide wet label fixtures.

b. Three-phase mainline copper power feeder to terminals of each escalator controller in the remotely located control cabinet or room with protected, lockable OFF, disconnect switch.

c. Three-phase copper power feeder with protected, lockable OFF disconnect located in machine room or cabinet for combined combplate and truss heater circuit.

d. The contractor shall arrange and pay for three-phase temporary power with the same characteristics as the permanent power to be made available to the installer at the time of the setting of the truss. Permanent power shall be made available for testing.

e. Single phase copper power feeder to each remote escalator control cabinet heaters with individual protected, lockable OFF, disconnect switch located in machine room space.

f. Single phase copper power feeder to each lower end and upper end escalator pit for balustrade and combplate lighting with individual protected, lockable OFF, disconnect switch located in machine room space.

C. Structural Requirements:

1. The installer shall provide escalator truss mounting angles and intermediate truss supports with attachments, sized as required to install escalators into wellway structural support system shown on the contract drawing.

2. Escalator intermediate support points shall be provided by the installer where indicated on drawings. Details and calculations shall be submitted by the escalator installer for approval by the owner.

3. Reaction loads shall be indicated on Issued for Construction Drawings.

4. Seismic designs shall be based on actual story drift data from the building's structural engineer.

5. Seismic calculations shall be based on the design loadings in this document.

6. Brake load per APTA Requirements:

a. Static brake load (load per step on the total number of exposed steps on the incline) shall be: 1000 mm step: 306kg(674lb).

b. Dynamic brake load (load per step running in the down direction on exposed steps on the incline) shall be: 1000 mm step: 145kg(320lb).

7. Step Load:

a. Step, step chain and motor duty load shall be a minimum step load per step of 1000 mm step: 145 kg(320lbs.).

D. Environmental Requirements:

1. Escalators shall be capable of operating with fully specified performance capability while exposed to the following climatic and environmental conditions:

a. Exterior installations: All escalators shall be treated as being outdoors and designed to meet the requirements of exterior installations. Escalators shall be designed to operate while exposed to the natural elements of weather, including sunlight, rain, slush, snow and ice; all conditions of relative humidity while exposed to salt, deicing chemicals, airborne dust, and debris, and corrosive elements; and a dry-bulb temperature range of -10 to 105 ºF.

1.02 REFERENCES

A. This Section incorporates by reference the latest revisions of the following documents:

1. American Society of Mechanical Engineers (ASME):

   a. ASME A17.1 Safety Code for Elevators and Escalators.

   b. ASME A17.2.3 Guide for Inspection of Elevators, Escalators and Moving Walks.

   c. ASME A17.5 Elevator and Escalator Electrical Equipment.

2. American Society for Testing and Materials International (ASTM):

   a. ASTM A36 Standard Specification for Carbon Structural Steel.

   b. ASTM A167 Standard Specification for Stainless and Heat-Resisting Chromium-Nickel Steel Plate, Sheet, and Strip.

   c. ASTM A568 Standard Specification for Steel, Sheet, Carbon, and High-Strength, Low-Alloy, Hot-Rolled and Cold-Rolled, General Requirements.

   d. ASTM A1008 Standard Specification for Steel, Sheet, Cold-Rolled, Carbon, Structural, High-Strength Low-Alloy and High-Strength Low-Alloy with Improved Formability.

   e. ASTM A1011 Standard Specification for Steel, Sheet and Strip, Hot-Rolled, Carbon, Structural, High-Strength Low-Alloy with Improved Formability.

   f. ASTM B209 Standard Specification for Aluminum and Aluminum-Alloy Sheet and Plate.

   g. ASTM B221 Standard Specification for Aluminum and Aluminum-Alloy Extruded Bars, Rods, Wire, Profiles and Tubes.

3. National Fire Protection Association (NFPA):

   a. NFPA 70 National Electrical Code.

   b. NFPA 101 Life Safety Code.

   c. NFPA 130 Standard for Fixed Guideway Transit and Passenger Rail Systems.

4. National Electrical Manufacturers Association (NEMA):

   a. Standards Publication No 250-1979. Enclosures for Electrical Equipment.

5. Local AHJ Code Amendments including but limited to:

   a. Seattle Building Code (SBC).

6. American Welding Society (ANSI/AWS):

   a. ANSI/AWS D1.1 Structural Welding Code-Steel.

   b. ANSI/AWS A2.4 Standard Symbols for Welding, Brazing, and Nondestructive Examination.

7. Occupational Safety & Health Administration (OSHA):

a. 29 CFR Part 1926, Safety and Health Regulations for Construction.

8. Americans with Disabilities Act of 1990 (ADA):

a. 28 CFR Part 36. ADA Standards for Accessible Design.

9. National Association of Architectural Metal Manufacturers (NAAMM):

a. AMP 555-92. Code of Standard Practice for the Architectural Metal Industry.

10. Washington Administrative Code (WAC):

a. Title 296: Department of Labor and Industries; Chapter 296-96: Safety Regulations and Fees for all Elevators, Dumbwaiters, Escalators, and Other Conveyances.

11. APTA Heavy Duty Guidelines:

a. APTA RT-EE-RP-001-02 REV 3-Heavy Duty Escalator Design Guidelines.

B. Definitions:

1. Terms used are defined in the latest edition of ASME A17.1, Safety Code for Elevators and Escalators.

2. Reference to a single device or part of the equipment applies to the full number of devices or parts required to complete the installation as specified.

3. Machine room refers to the upper pit of each respective escalator.

4. Approved Equal means that it has been reviewed and approved by Sound Transit to meet the requirements of the specifications and Sound Transit Requirements Manual.

1.03 SUBMITTALS

A. Submit:

1. Pre-revenue Warranty Maintenance Plan.

a. Submit a detailed Pre-revenue Warranty Maintenance Plan.

2. Construction Work Plan for delivery and installation of escalators.

3. Shop Drawings: A scaled and fully dimensioned layout Including: Plan of pit, wellway, indicating equipment arrangement and elevation section of wellway, including Escalator intermediate support points indicated on drawing with all supporting details and calculations.

4. Product information shall be submitted with an index listing each product, along with the application method of the product, approximate quantity of product per escalator, and the component the product is applied to or associated with. Include all elements manufactured by others to be included in the escalator:

a. Location of lower and upper working points, proposed attachment for escalator truss to entrance structure, intermediate support details, thermal

expansion joint, load reactions, rated capacity and speed, handrail details, and machine room space and access.

b. Location of major mechanical and electrical components within truss, electric interface connections, and drainage connections.

c. Electrical layouts showing location of truss lighting, light switches, light fixtures, maintenance receptacles, and safety devices.

d. Schematic and electrical wiring diagrams of power distribution and control systems, including wiring of safety devices and interface connections for remote surveillance for each typical escalator, or group of escalators.

e. Location of operating panel in upper and lower-end balustrades. Show following items:

1) Stop button.

2) Start and direction selection switch.

f. Show location of following items:

1) Outline of escalator truss in profile and plan.

2) Elevation of escalator balustrade.

3) Vertical section through balustrade.

4) Truss midway between working points.

5) Reaction loads and location.

6) Truss stanchion.

7) Track system and supports.

8) Drive system.

9) Step nosing radius at upper and lower ends.

10) Drive chains and gear train.

11) Step chain or step links (including chain pitch, step and trailer wheels).

12) Step assembly (including axle, step tread, frame and riser).

13) Handrail system (including profile, guides, drive and tension device).

14) Support details with vibration isolation (including upper, lower, intermediate and slip joint), balustrade deck cover, interior panels, skirt panels and their moldings.

15) Safety switches and operating devices.

16) Motor and emergency brakes.

17) Floor plates.

18) Speed governor.

19) Metal gauges and identification of finishes.

20) Radial, vertical and horizontal dimensions required for manufacture, and positions of lower and upper working points.

21) Attachment of truss to structure.

22) Major mechanical and electrical components within truss.

23) Drainage and electrical interfaces.

24) Hand and finger guards.

25) Ceiling intersection guards.

26) Vibration isolation.

27) Passenger instruction signs.

28) Emergency stop button; and operating panel in upper and lower balustrades (including stop button, start and direction selection switches, and fault finder receptacle).

29) All bearing ratings, identification and catalog numbers shall be provided.

30) A complete schematic diagram shall be provided for the controller and all electrical devices.

31) Certificate holder: including but not limited to, test certificates for step chain shall be provided for approval.

g. Engraved conveyance number.

h. Power Confirmation Sheets: Include motor horsepower, code letter, starting current, full-load running current, and demand factor for applicable motors.

i. Balustrade elevation: Facsimile outline of escalator balustrade in elevation.

j. Balustrade Section: Vertical section taken completely through balustrade and truss midway between working points.

k. Escalator cladding: Vertical section taken completely through escalator cladding, handrail, and decking at mid-flight at upper and lower deck where handrail and decking are level or parallel to floor.

l. Relationship to adjacent work including modifications of details, dimensions, and configuration for elements to accommodate selected products for Work of this Section.

m. Use AWS symbols for defining type, size, and length of welds. Indicate which welds are to be performed in shop and which welds are to be performed in field.

5. Finish Material: Submit samples of actual finished material for review of color, pattern and texture by Resident Engineer. Compliance with other requirements is the exclusive responsibility of the Contractor:

a. Type 316 stainless steel.

b. Lighting fixtures.

c. Skirt brush device including attachment means.

6. Operations and Maintenance Manuals:

a. In addition to requirements stated elsewhere in the Contract Documents, the Operations and Maintenance Manual shall include the following:

1) Neatly bound sets of written information necessary for proper operation, maintenance and adjustment of equipment. Generic information that does not pertain to the equipment installed shall not be included in the manual. Include the following as minimums:

a) Complete instructions regarding operation and maintenance of the specific equipment and components installed, including disassembly and assembly of drive system, handrail drive assembly and track system:

i) Include a complete functional description of each component of the escalator and complete procedures and step-by-step guide for maintenance, repair and overhaul. Instructions shall be at the adjuster's level and include all necessary measurements, including clearance, gap and torque readings.

ii) Include complete, illustrated, exploded views of all assemblies and a complete, illustrated, exploded view for identifying all system parts.

iii) Include operating instructions specific to each escalator, including location, function and operation of all controls, gauges, indicators and switches, as well as emergency procedures.

b) Complete nomenclature of replaceable parts, part numbers, current cost and warehouse location. If the product source is another vendor, then the installer shall include the name and address of the other vendor.

c) Sample copies of a preventive maintenance chart specific to the installed equipment and components.

d) Descriptions of safety devices.

e) Safety rules, tests and procedures, including testing of all systems and subsystems.

f) Procedures and settings for adjusting safety switches, brake, handrail tension, handrail chain drive tension, step chain tension, track system, and mechanical components, including pictorials. Include all recommended measurement values such as torque and pressure.

g) Instructions for removing the floor plate, replacing comb segments, and removing and installing steps and interior panels.

h) Troubleshooting techniques:

i) Include a full and complete list of fault and error codes for each escalator.

i) Detailed lubrication and cleaning schedule indicating weekly, monthly, quarterly, semiannual and annual lubrication; and a description of each lubrication point, lubrication type and specification. In addition, a laminated lubrication chart shall be mounted on the controller cabinet and shall include lubrication instructions including recommended grade of lubricants.

j) List of special tools required for escalator inspection, adjustment, maintenance and repairs.

k) List of recommended spare parts and stock quantities for routine maintenance of the equipment. Include a list of spare parts considered critical and for which long lead time frames for acquisition would result in extended equipment down-time.

l) Control and schematic electrical wiring diagrams of the controller, including wiring of safety devices to connections with remote indication and control panels for each escalator and group of escalators.

m) Electrical layout showing placement of lighting, light switches, receptacles, light fixtures, disconnect switches and convenience outlets in the truss envelope and pits.

n) Complete detailed drawings and wiring diagram of escalator fault finding device and connection to annunciator panel.

o) Interface drawing that indicates all related devices.

p) As-Built drawings shall be provided with the Operations and Maintenance Manuals. As-built drawings shall include the same items as indicated in Construction Submittals/Shop Drawings with all items updated to final as-built condition.

q) Straight-line wiring diagram of as-installed escalator circuits, with index of location and function of components, shall be provided with the Operation and Maintenance Manuals. In addition, mount installation wiring diagrams on panels, racked, or similarly protected, in escalator machine room space. Provide one complete reproducible master set rolled and in a protective drawing tube. Maintain with additions of all subsequent changes during the Warranty and Extended Maintenance periods. These diagrams are Sound Transit's property.

r) Detailed Warranty Maintenance and Revenue Service Maintenance programs, showing functions to be performed and their scheduled frequency.

7. 4 sets of neatly tagged keys for all switches and control features to be handed over to ST with Operations Manual:

   a. All escalators within the same facility shall be keyed identically.

8. Special Tools:

   a. Provide, for each escalator installed, a complete set of all special tools required for escalator maintenance.

   b. Diagnostic equipment: Provide diagnostic test device complete with instructions, access codes, adjuster's manuals, and set-up manuals for adjustment, diagnosis and troubleshooting, and performance of routine safety tests.

B. Transmit:

1. Provide electronic file of all escalator programs and a printed program list.

2. Welder certifications and qualified welding procedures and necessary documentation, as required in, Metal Fabrications for review and acceptance. See Section 05 05 23 - Metal Fastening for required welding submittals/ transmittals and requirements. Including the following information:

   a. Product Data.

   b. Welding Electrodes (including Mill Certifications).

   c. Welding Records and Data.

   d. Inspections and Test Reports.

   e. Submit Weld Inspector Qualifications and NDT Personnel Qualifications.

3. Test Procedures.

4. Certificates and Test Reports - Written certified reports for required tests, recording dates performed, test method, test results, interpretation of results, and recommended action. Include Certificate and Test Reports for following:

   a. Manufacturer's certificate of rated load test.

   b. Manufacturer's certificate for the chain breaking load.

   c. Contractor's standard field test and data report.

   d. Certificate of inspection by the Washington State Department of Labor and Industries

   e. Operating permit issued by the Washington State Department of Labor and Industries

5. Product Data:

   a. Transmit Material Safety Data Sheets (MSDS).

b. Catalogue Cut Sheets of all products identified in Part 2 Products

c. All source testing results, mill certifications, certificate of material origin (for buy America requirements) and certifications of compliance.

1.04 SOURCE QUALITY CONTROL

A. Compliance with Regulatory Agency: Comply with most-stringent applicable provisions of the Code and/or Authority outlined in Article 1.02, herein, including revisions and changes in effect on date of these Contract Specifications.

B. Welding shall be performed in accordance with the requirements of the AWS. Welders shall produce evidence of current certification by the AWS. Source welding inspection and testing shall be performed.

C. Factory Visit:

1. ST may elect to visit the factory where the escalator is being manufactured.

2. The escalator shall be tested in the factory with the controller to be shipped with the escalator prior to shipping and successful compliance with test shall be provided to ST. If ST chooses to visit the factory, they shall observe the steps and chain in operation and test selected devices.

1.05 DELIVERY, STORAGE, AND HANDLING

A. When escalator manufacturing process is complete and facility access is complete, deliver escalators and equipment to Work site in manufacturer's unopened protective packaging.

B. Transport, handle, and store materials in manner to ensure preservation of material quality and fitness for incorporation in Work. Store material in a manner to facilitate inspection and prevent damage.

C. Erection equipment is subject to review and acceptance by the Resident Engineer upon delivery to Work site. If equipment is deemed by the Resident Engineer to be unacceptable or hazardous to personnel and property, promptly bring to acceptable condition, or remove from Work site. Obtain approval from the Resident Engineer for use of heavy moving and erection equipment supported by station structures prior to use.

D. Protect equipment and exposed finishes during transportation, erection, and construction.

1.06 WARRANTY MAINTENANCE

A. Pre-revenue Warranty Maintenance:

1. Provide full-service Maintenance. This period shall commence upon installation and extend to the start of Revenue Service:

a. Full-service maintenance shall include standard monthly maintenance, replacement parts, below and annual testing.

2. Provide preventive maintenance and callback service during normal working hours. Systematically examine, adjust, clean, and lubricate equipment. Repair or replace defective parts using parts produced by the manufacturer of installed equipment. Maintain escalator control space at upper landing, wellway and pit in clean condition. Defective is defined to include, but not to be limited to; operation or control system failures, performance below required minimum, excessive wear, unusual deterioration or aging of materials or finishes, unsafe conditions, the need for excessive maintenance, abnormal noise or vibration, and similar unsatisfactory conditions.

3. Exercise each escalator during monthly maintenance visits. Exercising of equipment shall consist of continuous operation for one hour. Direction of travel shall be reversed each month.

4. All warranty and maintenance work shall be performed by a company that has a current code compliant Maintenance Control Program (MCP) on file with L & I. Warranty maintenance shall meet the MCP criteria as outlined in ASME A17.1 as well as all manufacturer's recommended maintenance.

5. Equipment Manufacturer is responsible for upgrades and revisions of software and documentation of associated revision to the Operations and Maintenance Manual.

6. The Contractor shall document all maintenance and transmit maintenance records to Sound Transit.

B. Extended Warranty Maintenance:

1. Provide Extended Warranty Maintenance for a five-year period commencing at the start of Revenue Services per Appendix A "Extended Maintenance Services Scope of Work" and as generally described below:

a. Submit detailed Extended Maintenance and Revenue Service program, showing functions to be performed and their scheduled frequency.

2. Provide full-service preventive maintenance as recommended by the manufacturer and in accordance with all applicable codes, and 24-hour emergency callback service. Systematically examine, adjust, clean, and lubricate equipment. Repair or replace defective parts using parts produced by the manufacturer of installed equipment. Maintain escalator control space, wellway and pit in clean condition.

3. Removal of units from beneficial usage for maintenance purposes shall be coordinated with and approved by Sound Transit, unless removal is necessitated for emergency repair or adjustment. Normal preventive maintenance service shall be performed during off-peak operating hours.

4. All units shall be available for use an average of 98.7 percent of property hours of operation over each three-month period during Warranty Maintenance service. This includes allowance for equipment out of service time as the result of callbacks, scheduled preventive maintenance, and repairs. Contractor's failure to meet this unit availability provision for two consecutive three-month periods for any single elevator or escalator, or group of units, shall trigger an automatic maintenance audit by Sound Transit. Contractor agrees to expeditiously take corrective action in regard to identified deficiencies. Further, Contractor acknowledges Sound Transit's right to pass cost of said audit to Contractor.

5. All warranty and maintenance work shall be performed by a company that has a current code compliant Maintenance Control Program (MCP) on file with L & I.

6. Equipment Manufacturer is responsible for upgrades and revisions of software and documentation of associated revision to the Operations and Maintenance Manual.

1.07 PERMIT, TEST AND INSPECTION

A. Obtain and pay for permit, license, and inspection fee necessary to complete the installation. Installation will be considered complete when the governing authority of Washington State Department of Labor and Industries has issued a permanent operating permit for each escalator.

PART 2 - PRODUCTS

2.01 MANUFACTURERS

A. Approved Manufacturers:

1. KONE.

2. Schindler.

3. Thyssenkrupp.

4. Otis.

5. Mid American.

6. Or Sound Transit approved equal- must be reviewed and approved by Sound Transit and meet APTA grade requirements.

2.02 MATERIALS

A. General:

1. All escalators shall consist of a corrosion resistant truss assembly (galvanized), step-drive units, steps and step chains, driving machine and controller, safety devices, comb and deck plates, handrails and deck trim, newels and balustrades, balustrade lights, and other accessories and appurtenances. The sides and underside of the truss, exterior of the escalator, and machinery spaces shall be enclosed.

2. No wood or wood products shall be used in escalators.

B. Steel:

1. Sheet steel (Furniture Steel for Exposed Work): Stretcher-leveled, cold-rolled, commercial-quality carbon steel, complying with ASTM A1008, matte finish.

2. Sheet Steel (for Unexposed Work): Hot-rolled, commercial-quality carbon steel, pickled and oiled, complying with ASTM A568 and A1011.

3. Structural Steel Shapes and Plates: ASTM A36.

C. Stainless Steel: Type 316 complying with ASTM A167, with standard tempers and hardness required for fabrication, strength and durability. Apply mechanical finish on fabricated work in the locations shown or specified, (Federal Standard and NAAMM nomenclature), with texture and reflectivity required to match Resident Engineer's sample. Protect with adhesive-paper covering.

1. Shapes and bars: ASTM A-276, type 304 or 316, A-554 for tubes.

2. Plate, sheet and strip: ASTM A-240, type 316 for exterior installations.

3. Non-directional orbital uniform finish: 80 grit orbital sanding over standard mill plate or shape to produce a uniform non-directional satin finish with 90 percent of mill marks removed to match Resident Engineers visual sample.

D. Aluminum: Extrusions conforming to ASTM B221; sheet and plate conforming to ASTM B209:

1. Casings and extrusions: Commercial mill finish.

E. Galvanizing:

1. Sheet steel: ASTM A653 as applicable. Coating designation G185.

2. Other galvanizing: ASTM A123, ASTM A153, ASTM A385 or ASTM A386, as applicable.

3. Galvanizing touch-up: Zinc dust coating, MIL-P-21035 or MIL-P-26915.

F. Fasteners:

1. Fasteners shall be compatible with materials being fastened. Fasteners shall be furnished with self-locking nuts or retaining rings (spring washers, toothed disks).

2. Fasteners shall be equal to or of greater corrosion resistance than the most corrosion resistant metals being fastened.

G. Corrosion Protection:

1. After welding, the truss shall be hot dipped galvanized with a coating in accordance with ASTM A90. A 100-percent zinc thermal spray coating to ASNI/AWS C. 18-93 is an acceptable alternative.

2. Cast metal parts such as gear housings, chain sprockets and return station half circles shall be painted with a rust inhibitor primer coat after preparation by sandblasting.

3. Steel parts that are not specified to be galvanized shall be painted to meet High Performance Coating requirements. Bright or uncoated axles, shafts, etc., shall be protected by zinc chromate or chrome plating.

H. Paint: Clean exposed metal of oil, grease, scale, and other foreign matter and factory paint one shop coat of manufacturer's standard rust-resistant primer. After erection, provide one finish coat of industrial enamel paint. Galvanized metal need not be painted.

I. Prime Finish: Clean all surfaces receiving a baked enamel finish of oil, grease, scale, and other foreign matter. Apply one coat of rust-resistant mineral paint followed by a filler coat over uneven surfaces. Sand smooth and apply final coat of mineral paint.

J. Baked Enamel: Prime in accordance with Article 2.02E above. Apply and bake three additional coats of enamel in the selected solid color.

K. All equipment and metalwork installed as a part of this Work, which does not have special architectural finish and which is exposed in the wellway, shall be thoroughly cleaned of oil, grease, scale, and other foreign matter and given one coat of field-applied machinery enamel. Damaged factory-painted surfaces shall be neatly touched up with original paint and color.

L. All natural metals shall be stretcher-leveled, re-squared sheets. All surfaces shall be smooth and without waves.

2.03 EQUIPMENT

A. General Operation

1. Escalators shall be heavy duty escalators suitable for public transit. The escalator design shall incorporate finishes, materials and components to deter and resist vandalism.

2. All escalators supplied within this contract shall be the products of a single manufacturer.

3. Escalators shall be designed for the following conditions:

   a. Hours of operation shall be considered as 24 hours per day, 7 days per week.

   b. Direction of travel shall be considered as either direction, and unit shall be up-and-down reversible. Unit shall be capable of reversing the direction of traveling without significant adjustments or maintenance activity.

   c. Escalator components shall be designed based on the design loads as defined herein, following applied duty cycle during operation:

      1) Three hours with 100 percent design load.

      2) Six hours with 50 percent design load.

      3) Eleven hours with 25 percent design load.

B. Escalator Features:

1. Number: As specified and detailed on the Issued for Construction Drawings.

2. Size: 48 inches wide (40-inch step).

3. Speed: 100 feet per minute (fpm).

4. Maintenance Speed: <= 25 fpm.

5. Rise: As noted on Issued for Construction Drawings.

6. Floors Served: As specified and detailed on the Issued for Construction Drawings.

7. Angle of Inclination: 30 Degrees.

8. Operation:

   a. Escalators in Pairs: Reversible under full load as defined by ASME A17.1.

   b. Single Escalators: Reversible under full load as defined by ASME A17.1.

9. Drive Motor Gear Box: worm or helical.

10. Balustrade Finish: Non-directional stainless steel.

11. Deck Configuration: High.

12. Deck Finish: Non-directional stainless steel.

13. Molding and Trim: Match deck finish.

14. Skirt Panels: Satin finish Stainless steel with anti-friction coating applied.

15. Handrail Color: Black with white inserts.

16. Step Tread and Riser: Cleated and meshed with adjacent step with tread demarcation inserts, tread sides and nosing.

17. Upper Track Radius: 8 feet 6-inch radius.

18. Lower track radius: 6 feet, 6.75-inch radius.

19. Demarcation Color: Yellow.

20. Power Supply: 480 Volts, 3 phase, 60 hertz.

21. Additional Features:

    a. Step demarcation lighting.

    b. Emergency stop buttons.

    c. Caution signs at each landing.

    d. Floor intersection guards.

    e. Truss extensions.

    f. Floor Landing Plates and Landing Plate Extensions as required at adjacent escalators.

    g. Truss and Combplate heaters (480V).

    h. Combplate lighting.

    i. Skirt/balustrade Lighting.

    j. Fault finder mounted in inner deck or at stop switch location.

    k. Intermediate supports located as detailed.

    l. Balustrade mounted passenger detection sensor for sleep mode. Bollard mounted beam type detection sensors are not acceptable.

    m. Oil Water Separator.

    n. Power supply provided as detailed in the Issued for Construction Drawings. Provide a junction box and conduit as needed based on a power supply located at the lower end of the escalator. Power source should be independent and dedicated and not tied to any other system or associated equipment that could interfere with the running of the unit or cause a shutdown.

    o. Anti-slide devices on decks when the outer edge of the deck is 8 inches or greater from the edge of the handrail, or on adjacent escalators when the unobstructed distance between the edge of facing handrails is 12 inches or greater. Anti-slide devices to be a minimum 2 inches diameter by 1 inch height stainless steel with concealed mounting.

    p. Stainless steel frame with polycarbonate glazing for mounting escalator operating permit. One per escalator.

    q. High water level sensor/switch.

22. Performance:

    a. Step Speed: Unit shall be capable of operating at Contract speed under all loading conditions in either direction of travel.

1) Rated speed shall not exceed 100 fpm. The no-load-to-full-load speed shall not exceed 4 percent of the rated speed.

b. Handrail Speed: Consistent with step speed.

c. Provide sleep mode functionality:

1) Provide variable frequency drives (VFD) for reversible escalators in pairs.

2) Provide variable frequency drives for single up-only escalators.

23. Operation:

a. Each unit shall be capable of operating smoothly and quietly at rated speed with synchronized step and handrail operation and speed in either direction of travel.

b. Each unit shall be provided with all controls, programming and equipment necessary to meet the following sleep sequence of operations:

1) Detection sensors at each landing shall continually monitor for passengers boarding and leaving the escalator:

a) Detection of approaching passengers shall occur sufficiently in advance of boarding to allow the escalator to reach full operating speed prior to a passenger walking at normal speed (270 ft/min) reaches the combplate.

2) If no passenger is detected for greater than 3 times the amount of time necessary to transfer a passenger between landings (adjustable), the escalator shall enter a sleep mode:

a) Sleep: Variable Frequency Drive (VFD) ramps escalator speed down to a minimum speed not less than 10 ft/min:

i) The deceleration rate shall not exceed 1.0 ft/sec/sec.

3) Upon detection of a boarding passenger the VFD ramps the escalator speed up 100 ft/min.:

a) The acceleration rate shall not exceed 1.0 ft/sec/sec.

b) The rated speed shall not be exceeded.

4) If a passenger is detected approaching against the direction of escalator travel at the egress landing, the VFD shall ramp the escalator up to rated speed and sound the alarm at the approaching landing before the passenger reaches the combplate.

5) Upon failure of the passenger detection sensor the escalator shall default to continuous operation at rated speed.

24. Seismic Features:

a. Provide slip joints pinned and as designed by a Structural Engineer registered in the State of Washington. Provide sliding assembly based on actual story drift and approved by Sound Transit:

1) The slip joint slide bearings shall not use grease for lubrication.

b. Provide seismic switch to disable escalator if a seismic event occurs. Locate beneath soffit at lower end, or other approved remote location, outside of truss.

25. High Water Sensor:

a. Water level sensors shall be provided in the bottom pit within the truss envelope of each escalator and incorporated into the safety circuit. High water shall stop the escalator and prevent it from being started. When the water level goes down the escalator shall automatically start without reset

26. Remote Stop Features:

a. Provide capability for future implementation of remote stop audible alarm, delay and controlled deceleration as prescribed in NFPA 130 Sections 5.5.2.1.

C. Machine Room Equipment:

1. General: The controller shall be located remotely as indicated in the Issued for Construction Drawings. The limit of wire length between the upper pit of the escalator and the escalator controller is 325 ft.

2. Driving Machine: Worm geared or helical spur gear reduction unit coupled directly to drive motor.

a. V-belt and tooth belt drives shall not be acceptable.

b. Head shaft bearings shall be rated for ABMA L10 200,000 hours.

3. Gear Box Requirements:

a. Gear bearings shall be rated with an ABMA L10 life of 200,000 hours and housed in an oil-tight, dust-proof case. The case shall provide a convenient method of draining the oil.

b. Synthetic lubricants shall be used.

c. Rotating parts shall be provided with a means for lubrication and retention of lubricants.

d. Sealed bearings shall be used.

e. Exposed, moving drive elements shall be protected by metal housings, which shall provide access for lubrication of components.

f. A low oil sensor shall be provided to prohibit starting of the escalator on automatic operation with low oil in the gear case.

4. Fault Finder: Provide fault-locating instrumentation to monitor supply voltage, drive unit, wheels, drive chains, step chains, safety circuits, emergency brake lubrication oil, up thrust switch, handrail entry, broken handrail, skirt switch, top and bottom step chain, or step-link switch, combplate, under/over speed switch, low lubricant level indication, and emergency stop switch. Permanently install fault-finding equipment at each escalator. Provide display to indicate trouble code in outer deck at readily visible location. Design to resist vandalism.

a. Drive Motor: Three-phase, operating at no greater than 1200 revolutions per minute (rpm). The motors shall be totally enclosed with external cooling fins.

b. Design motors to operate in confined, unvented spaces. Motor insulation Class F or greater.

1) Provide heater as required to meet manufacturer's temperature requirements.

c. Motor starting: Incorporate reduced current starting.

5. Brake Requirements

a. Operation: Safely decelerate, stop, and hold rated load in accordance with Code requirements.

1) For escalators operating in the down direction, application of the brakes shall not cause the escalator to stop at a rate greater than 3 feet/second/second.

b. Motor brake:

1) The brake coil shall be insulated to Class F.

2) A monitor shall be provided, and if brake lining becomes insufficient for safe usage, restart of the escalator shall be prevented.

c. Step Band Lock

1) A step band lock shall be manually applied and mechanically engaged to prevent movement of linkages while the escalator is disconnected from its power supply.

2) An electrical interlock that shall prevent escalator drive motors from starting while the step band lock is engaged shall be provided.

6. Controller: Provide manufacturer's standard PLC. Controller shall be capable of all features and modes of operation as specified herein. Wire to identify terminal block studs. Identifying symbols or letters identical to those on wiring diagrams permanently marked adjacent to each component on the controller. Enclose all components in a lockable steel cabinet located in a non-public space outside of the escalator pits. Provide mainline circuit breaker and means to protect against overload and single phasing. Provide Washington State Department of Labor & Industries conveyance number and escalator number on controller cover:

a. The escalator controller shall have one dedicated serial port, which supports RS-232-C signals. It shall be accessible in ladder logic and provide support for point-to-point and slave SCADA communication protocol systems. Alternatively, it must be usable for programming purposes or for access to remote programmers.

b. The escalator control equipment shall contain diagnostic capabilities as required for the ease of complete maintenance. The diagnostic system shall be an integral part of the controller, capable of storing the last 99 safety device faults and provide user-friendly interaction between the service person and the controls. All such systems shall be free from

decaying circuits that must be periodically reprogrammed by the manufacturer:

1) A permanently mounted full-color view panel capable of providing fault and operating data shall be mounted external to the pit and protected from moisture.

2) Troubleshooting capabilities shall include the ability to easily identify a single activated switch in a circuit that may include multiple switches.

c. Switchgear and controller shall be mounted in NEMA 4X cabinets with strip heaters and labeled terminal strips.

d. Each control cabinet shall be provided with an integral heat exchanger capable of dissipating built up heat released from the associated controller and drive.

e. Every escalator shall be clearly and permanently marked on the controller with rated load and speed, braking torque, manufacture serial number, manufactured date, and the designated owner identification. Duplicate data plates for all motors, brakes and switches shall be mounted and labeled on the inside of the escalator controller.

7. Operating Devices:

a. Escalators shall have the provisions to be remotely stopped by the LCC. Appropriate conductors and controls shall be provided for future implementation but not connected until directed by Sound Transit. This functions solely as future proofing for possibility of greater connectivity.

b. Controls and Safety Devices - Operating controls:

1) Escalators shall be provided with a soft start feature to prolong the life of components.

2) Escalators shall have key-operated switches, accessible at both upper and lower landings, located on the exterior deck above the newel base. Alternate locations may be used subject to approval by Sound Transit.

3) Each keyed switch shall be clearly and permanently labeled, including starting and direction selection where escalators are reversible.

4) Interlocks shall be provided to bring the escalator to a smooth stop, in either direction of travel, before a change of direction may be made for reversible escalators.

5) The key switch shall be keyed to manufacturer's standard key system.

8. Control Switchgear (Main): The main control switchgear of an escalator shall contain at least the following devices:

a. Lockable main switch thermal and magnetic motor protection starter for up and down travel, hour counter, auxiliary contactors, phase failure device, phase sequence monitor and ground fault monitor.

b. The indication shall be locked automatically. Reset shall be done by a separate switch installed in the controller. The emergency stop shall not be locked.

c. All terminals shall have identification markings, and all cables shall be provided with cable markers.

d. Relays shall be provided with visual indication that they are energized.

9. Step Drive Assembly: Direct or indirect drive. Machine sprockets at each side over which step chains or step chain rollers: pass and transmit motion from machine to steps. If indirect chain drive is used between machine and drive sprocket, provide emergency brake on drive assembly to automatically set if drive chain fails. Provide roller-type sealed bearings.

10. Stop Switch: Conform to Code:

11. Remote Monitoring Interface: Provide an interface terminal strip mounted within the escalator controller for remote monitoring and control of each escalator by the Building Management System (BMS).

a. Terminal strip shall be of sufficient size to receive all points specified below with additional space for future expansion of 4 points minimum.

b. Terminal blocks: Accept No.14 AWG.

c. Receive the following dry contact inputs to effect the following control actions for each escalator:

1) Remote Stop.

d. Provide normally open dry contacts for each of the following status items for each escalator:

1) Escalator Running/Off.

2) Escalator Traveling Up/Down.

3) Escalator Fail.

4) Escalator Emergency Stop Button.

5) Seismic operation.

6) Truss heater.

7) Combplate heater.

e. Provide conduit and wiring between the escalator pit, high water sensors and the interface terminal strip for remote monitoring by the Building Management System.

1) Provide normally open dry contact for the following status item for the pit:

a) Sump High Water Alarm:

Interface Terminal Strip				
Term Block Label	Type	Operation	Dry Contact Function	
			Opened	Closed
S1A S1B	Status	Maintained	Not Running	Running
S2A S2B	Status	Maintained	Traveling Up	Traveling Down
S3A S3B	Alarm	Maintained	Failed	Not Failed
S4A S4B	Status	Maintained	OK	Seismic Operation
S5A S5B	Alarm	Maintained	Truss Heater	OK
S6A S6B	Alarm	Maintained	Pit High Water Level	OK
S7A S7B	Alarm	Maintained	Emergency Stop Button	OK
C1A C1B	Control	1 Second Closure	No Operation	Remote Stop

D. Wellway Equipment:

1. Truss: Steel truss to safely carry entire load of escalator, including all components, all cladding, full-capacity live load and weight of exterior truss with a factor of safety according to Code. Engineer truss to carry the exterior cladding material according to design assuming a dead load of 10 psf. Provide clearly identified exterior cladding support attachment locations on exposed sides and bottom of the entire length of truss. Provide fire resistant galvanized sheet metal exterior cladding at manufacturer's factory:

   a. The deflection of the loaded truss shall not exceed one-thousandth of the span under code required live load.

   b. In addition, design truss to carry the weight of Sound Transit provided signs and their associated structural support at located as shown on the contract documents. Assume a dead load of 250 pounds for each sign located as shown on the contract documents.

   c. Permanent identification shall be provided on the truss for the centerline at both ends of the escalator and in both transition curves.

   d. Permanent mark reflecting track system working point distances shall be provided at both ends of the escalator trusses.

   e. Field splices, connections and shims:

      1) Field splices shall be rigid and non-deforming and shall maintain alignment.

      2) Field modification shall not compromise the required paint and corrosion protection.

      3) All shims shall be type 304 stainless steel.

      4) Support shims shall not exceed 2 inches.

2. Truss Extensions: Provide truss extensions at upper and/or lower landings as required and/or as shown in Issued for Construction Drawings. End support locations will not be adjusted to accommodate installer's equipment.

3. Noise Control: Provide sound isolation within truss as required to limit noise levels relating to escalator equipment and its operation to no more than 65 Decibels (dBA), measured 3 feet above escalator at any point of its length.

4. Vibration Control: The support angles at both ends of the main truss shall be mounted on isolation pads to prevent trans-mission of noise and vibration to the building structure. Readjustment of the escalator alignment shall be possible at any time by means of jack bolts at the supports. An adjustable intermediate support with isolation shall be provided.

5. Drip Pans: Minimum 1/8-inch galvanized steel drip pans of oil-tight construction beneath pit, machine room, and entire length of trusses. Ensure drip pan is of sufficient strength to withstand the weight of maintenance personnel. Ensure pan extends full inside length and it's wide enough to collect oil drips, water, dirt and anything dropped through the tracks; slope to drain. Provide suitable drains with grease trap at base of each oil pan with removable access plate to sump.

6. Oil Water Separator: For all outdoor or partially outdoor escalators, provide wellway with an oil water separator located at the lower pit.

7. Step Tracks:

   a. Construct from steel. Bolt sections of track, including transitions, to facilitate maintenance and replacement if required. Factory install and align track sections, including transitions, to ensure smooth, quiet operation of running gear under all conditions. Form a fully independent assembly consisting of the individual track section, together with transition section, step chain tension carriage, main drive shaft and handrail drive shaft.

   b. Tracks shall retain steps and running gear safely under load requirements and at the highest speed specified.

   c. Sections of track shall be assembled together for easy removal and replacement of defective sections. The system shall be adjustable. Connecting of track sections by welding is not acceptable.

   d. Design of mechanical components shall provide for easy installation and removal without the dismantling of parts of the structure.

   e. The tracks shall be properly supported on trusses to provide correct alignment and smooth transition on return stations. The rolling surface of the passenger side tract shall be a minimum thickness of 1/8 inch, return side track shall be a minimum thickness of 5/64 inch.

   f. The guiding system for the step chains and step wheels shall be of zinc plated or galvanized steel profiles with smooth and even running surfaces and with the joints cut diagonally to the running direction. The guide profiles shall not be welded together at the joints.

   g. A second, continuous guiding profile shall be provided above the step chain rollers so that the step chains are positively guided in the area of the escalator open to passengers.

8. Step Chains: Steel links with hardened pins connecting adjacent steps and engaging drive sprockets. Provide synthetic composition roller assemblies with sealed bearings. Provide escalator design that permits chain inspection and operation while unit is running with steps removed:

a. Step chain shall be water resistant, low lubrication or lube free, endless, roller-type with one on each side of the step.

b. Step chains shall be heat treated steel construction, supported at intervals by linkage wheels.

c. A means to prevent steps from coming into physical contact with one another and to prevent chains from sagging or buckling shall be provided.

d. A means to maintain constant distance between step axles shall be provided.

e. An automatic tensioning device to maintain tension under load and to compensate for wear shall be provided. The device shall be located within the truss at the lower end.

f. Step chain tensioning device:

1) The step chain tensioning device shall be of a design that keeps the step chains at the correct tension.

2) A pointer and scale shall be required provided to gauge step chain tensioning and wear.

3) Bearings, if used, shall be rated ABMA L10, 200,000.

g. A means to maintain constant distance between step axles shall be provided.

h. Step chains shall be constructed to permit removal of segments as may be required for replacement purposes at a minimum of ever six-axle section. Each escalator shall have at least two one-axle sections.

i. Support wheels spaced to distribute load and to guide linkage throughout the run shall be provided. Rollers shall be constructed of polyurethane material, with a diameter sufficient to provide reliability, maintainability, smoothness of motion and to operate within the noise level requirements specified. The chain rollers shall have polyurethane tires, sealed bearings and diameters of not less than 4 inches... They shall require no additional lubrication. The wheels, hubs and bearings shall have an L10 rating of 100,000 hours:

1) Wheels shall be affixed to permit rapid replacement.

j. Each pair of step chains shall be a matched set within manufacturing tolerances. Only precision, roller fishplate chains of high-grade heat-treated steel shall be used as step chains.

k. Step chain and chain pins shall have a surface pressure at engaging points that shall not exceed 30 N/mm2 (3,450 psi). This is to be based on the step loads as defined in the step chain load requirement.

l. The safety factor shall be a minimum of 6.

m. A shielding device shall be provided to protect chain, track guides and rollers against water, dirt and debris.

n. Step chain lubrication requirements:

1) All parts, requiring lubrication other than sealed items, shall be designed for an automatic or remote lubricating system. The system shall operate only when the escalator is running, and the amount of lubrication shall be fully adjustable. A reservoir with a low-oil signal shall be connected to the controller, and a minimum capacity capable of providing the OEM's required lubrication for one month of operation based on the specific operating hours for this installation, shall be provided.

2) System shall be positive acting, located in the escalator pit.

3) A reservoir level indication shall be provided where lubricants are contained within housings, supply tanks and larger filler cups.

4) A means to maintain lubricant viscosity shall be provided when required.

o. Bearings:

1) Sealed bearings shall be used where possible.

2) Bearings requiring manual lubrication shall be furnished with fittings to accommodate the use of a pressure gun for lubrication.

3) Self-lubricating bearings or material other than ball or roller type.

4) Manual lubrication points shall be easily accessible and available.

9. Step Chain Tension Carriage: Spring tensioning device to take up chain slack and maintain constant tension.

10. Step Assembly: Single piece die-cast aluminum, fastened to the step chain axles. Provide cleated treads and risers. Cover the underside of Steps with sound-deadening material.

a. The steps shall carry the load under maximum concentric and eccentric loading conditions without failure.

b. Die-cast aluminum steps shall not have more than 0.3 percent copper content.

c. The Steps shall be designed to mesh with the combplates.

d. Step and various attachments shall permit removal of steps without disturbing the balustrades or decking.

e. The design shall permit the running of the drive without steps for convenience in cleaning and inspection.

f. Steps shall be constructed so as to be driven by step linkages to step or step rollers.

g. Step rollers shall have polyurethane tires in hubs, sealed roller bearings and a diameter of no less than three inches. Step rollers shall not require

any additional lubrication and must be rated for severe, heavy-duty service. Step roller bearings shall have an L10 rating of 100,000 hours.

h. Safety demarcation lines or strips shall be provided in step treads to assist demarcation between treads when they are level at top and bottom landings. Provide contrasting color demarcation lines (yellow) on back edge and sides of treads.

i. The entire assembly shall be treated with not less than one coat of zinc chromate primer or iron phosphate and one coat of power coated enamel for corrosion resistance.

j. Washers and nuts shall be provided as follows:

1) Tap bolts: Lock washers.

2) Through bolts: Lock nuts or approved equal.

11. Safety Devices: Escalator safety devices shall comply with code requirements and include a safety brake activated if the step chains break or the step chain tension drops below a predetermined level; a power supply cutoff to stop the escalator if it overspeeds by some fixed percentage, provision for automatic stopping if the direction of travel is accidentally reversed; and provision for automatic stopping if the treads are separated from the comb plate or the interior skirt panels by a predetermined amount.

a. Use of SIL (Safety Integrity Level) rated devices for EPD (Electrical Protective Devices) where possible is preferred to traditional positively opened mechanical switches. These devices shall be listed/certified and labeled/marked to a SIL rating in accordance with the applicable requirements of IEC 61508-2 and IEC 61508-3 with a SIL rating equal to or greater than the SIL indicated for the applicable device shown in ASME A17.1.

b. The detection of a dangerous fault (e.g. with diagnostic tests, proof-tests, or by any other means) in SIL rated electrical/electronic/programmable electronic system (E/E/PES, or commonly referred to as "PES") that can tolerate a single fault shall cause the escalator to revert to a known fail-safe condition. Where necessary, to maintain the integrity of the SIL rated PES and maintain the fail-safe condition prior to a second fault that could lead to a dangerous condition, a manual reset shall be required to remove the SIL rated PES from the fail-safe condition.

c. Safety devices include-but are not limited to-those required by ASME A17.1 and those listed below:

1) Broken Step-Chain or Step Link Device: A broken step chain or step link device shall be provided to cause the interruption of power to the drive machine if a step chain or step link breaks.

2) Broken Drive Chain Device: When the driving machine is connected to the main drive shaft by a chain, a device shall be provided to cause the application of the brake on the main drive shaft if the drive chain breaks.

3) Skirt Obstruction Device: A device shall be provided to open the power circuit to the escalator driving machine motor and brake should an object become wedged between the step and the skirt

panel as the step approaches either the upper or the lower landing.

4) Heavy duty skirt brushes mounted on the visible side of the skirting with tamper resistant brackets.

5) Reversal Stop Device: A device shall be provided to open the power circuit to the driving machine motor and operate the brake in case of accidental direction reversal while the escalator is operating in the ascending direction.

6) Automatic stop tied to fire alarm.

7) Step up-thrust.

8) Handrail speed.

9) Missing step.

10) Step level.

11) Handrail entry.

12) Combplate impact, and:

a) Step demarcation UL rated lights suitable for wet locations.

13) Lockable stop switch or disconnect shall be provided in both pits of escalators.

14) A switch shall prevent operation of the escalator if any part of the landing plates are not in place.

15) Speed Governor: A speed governor shall be provided to cause the interruption of power to the driving machine if the speed of the steps exceeds more than 40 percent above the rated speed.

16) Slide Prevention Device: Surface projections shall be provided on the surface of the outer decks between escalators or adjacent to walls to discourage patrons from sliding down the channels.

12. Electrical Wiring:

a. Conductors: Copper throughout with individual wires coded and all connections identified on studs or terminal blocks. Type SO cable may be utilized for wiring conducting 30 Volts or less, in accordance with NEC 620-621.

b. Conductors: 31 Volts rms or greater. Provide conduit, junction boxes, connections, and mounting means in accordance with requirements of Section 26 05 33, Raceways and Boxes for Electrical Systems. Provide painted or galvanized steel or aluminum conduit. Conduit size minimum 3/8 inch. Do not use flexible conduit exceeding 18 inches in length.

c. Galvanized rigid pipe and/or liquid tight flexible metal conduit shall be used in the truss. Liquid tight flexible metal conduit must be CSA/UL approved.

d. LSHF (low-smoke, halogen free) wiring shall be used where commercially available throughout the escalator installation.

e. In Class 2 circuits, SO cord may be used in lengths not to exceed 3 feet.

f. Liquid tight flexible metal conduit must be CSA/UL approved.

g. PVC may not be used in the escalator installation.

h. All fixtures shall be NEMA 4 where exposed to moisture.

13. Motors:

a. The driving motors shall be AC induction motors with starters. Voltage 480 VAC, three phase, frequency 60 Hz.

b. The motors shall be totally enclosed with external cooling fins.

c. The motor protection class shall be equivalent to IP55 insulation group F.

d. Driving motors and motor switchgear shall provide a smooth start.

2.04 COMPONENTS

A. Handrails

1. Design handrails for outdoor use. The handrail shall be a composite of either vulcanized rubber or an approved equal with a synthetic fabric slider and shall be constructed with a steel cable tension member providing a minimum strength of 25 kN over the splice area. Provide white inserts in black handrail, at least one insert shall be visible at all times at the end returns of the handrail.

a. Handrails shall receive their motion from the main escalator drive through direct gearing and drive shaft or drive chains, so that the handrail and steps operate at the same speed in each direction of travel. Driving and guiding wheels shall have a groove to accept the wedge on the underside of the handrail. The handrail shall have a V-shape wedge.

b. A means to take up handrail slack using a tensioning device, where required, shall be located within escalators. In addition, a method of releasing the device for repair or removal of handrails shall be provided.

c. Newels shall be designed and constructed so that the handrail will return into the newel end at a point inconspicuous and difficult for passengers to reach.

d. Newel sheaves shall be provided at the upper and lower newels.

e. The handrail drive system and guides shall be designed and installed so that the handrail cannot be thrown off or disengaged while running and special design attention shall be given to the area where the handrail passes from the drive system to the guides.

f. Handrail rollers shall have sealed bearings rated at ABMA L10, 100,000 hours.

g. Friction drive sheaves and idlers shall be designed and positioned so that lubricant cannot reach the surface of the handrail. Marking and spotting of the handrail by drive equipment shall not be permitted. Provide sealed bearings rated at ABMA L10, 100,000 hours.

h. Handrail guides shall be:

1) Continuous on the exposed portion of the handrails.

2) Constructed of type 316 stainless steel.

3) Shall not be subject to corrosion nor pitting.

4) Shall have a polished or specially coated permanent finish to minimize frictional wear to the under surface of the handrail.

5) On the unexposed portion, guiding shall be by adjustable rollers having sealed.

i. Handrail gearbox, if provided, shall have bearings rated at ABMA L10, 200,000 hours.

B. Balustrade:

1. Panels shall be a minimum of 1/8 inch solid type 316 stainless steel and backing panels, where used, shall be noncombustible and are subject to owner approval. Glass balustrades are not permitted.

2. Balustrades shall have no sharp edges or pinch points.

3. Panels shall be constructed, when practical, in equal lengths for interchangeability.

4. Panels shall be attached to permit easy removal for inspection, lubrication and adjustment of safety devices.

5. Panels shall be sized so that no more than two people are required to remove a panel, and without the aid of special handling equipment.

6. Requirements for exposed panel fasteners (where used): Panels shall be fastened to their respective supports or mating portions with tamperproof flathead machine screws.

7. When the framework to which panels are fastened is less than 1/4 inch thick, steel backup plates with a minimum 1/4-inch thickness shall be added. These plates shall have tapped holes or clearance holes where necessary.

8. Provide anti-slide devices on adjacent surfaces between escalators, stairs, or between escalator and walls to meet code.

9. Skirt Panels: Install to maintain clearance of step treads to skirt of not more than 3/16 inch. Extend skirt panel beyond combplates and wrap around base of newel. Panel reinforcing: Suitable for moist environment.

   a. Skirt panels shall be a minimum of 1/8 inch thick solid type 316 stainless steel.

10. Deck Boards: Abut all deck section to one another to provide a smooth surface-to-surface connection with butt joint transition, top and bottom, and horizontal to inclined sections.

   a. Decking shall be a minimum of 1/8 inch thick solid type 316 stainless steel, identical in finish to balustrade.

   b. Decking between escalators shall be designed to support a live load of 175 lb./ft^2 without permanent deformation.

c. Paneling, decking and other enclosures shall be supported on a steel frame.

11. Finishes:

a. Interior Panels: Non-directional finish stainless steel reinforced vertical panels with section joints vertical to escalator incline, flush inclined panel from skirt to handrail guide above.

b. Skirt Panels: Non-directional finish stainless steel.

c. Outer Deck: Non-directional finish stainless steel.

12. Trim and Moldings: Manufacturer's standard finish.

13. Floor Intersection Guards: Provide clear Plexiglas intersection guards at floor penetrations as required according to Code.

14. Extended Newels: Align newels of adjacent escalators at upper and lower landings.

C. Landings:

1. Flat Steps: Provide upper and lower landings with a minimum of three flat steps.

2. Combplates Assembly: Aluminum or other alloy provided with non-slip surface. Provide removable comb sections. Combplates shall provide a visual contrast with the steps either by color, pattern or texture. Provide combplate lighting in skirt panel on both sides of units at both upper and lower landings.

a. Complete assemblies of wear-resisting, noncorrosive metal material with exposed anti-slip surfaces shall be fabricated.

b. A separate switch for vertical and horizontal detection shall be provided.

c. Comb plate sections shall be removable to permit ease of replacement.

d. Provisions for lateral and vertical fine adjustments shall be provided so that cleats of step treads pass between comb teeth with minimum clearances.

e. Provide heaters for comb plate assemblies to eliminate buildup of ice.

f. Provide step demarcation lights at lower and upper ends of escalator immediately outbound of the combplate.

3. Landing Plates: Extruded or die-cast aluminum in a ribbed pattern transverse to the escalator axis. Ribs shall be designed to provide maximum traction and finished to match combplates. Extend plates from combplates to equipment access plates at upper and lower ends. Extend plates full width of truss. At locations where two escalators are adjacent, provide separate landing plates designed to allow adjacent escalators to remain operational while work is being performed only one escalator.

a. Shall have type 316 stainless steel frames at floor openings, designed to be supported on truss heads.

b. Shall be reinforced, as necessary, to be rigid and able to withstand a live load of 250 lb. /feet^2 with zero permanent deformation.

c. Shall have exposed portions constructed of material and finish to harmonize with steps and combplates.

4. Equipment Access Plates: Aluminum or other alloy with non-slip surface. Provide removable access plates to provide for entry into equipment spaces at upper and lower ends. Cover entire truss openings with plates. Match access plate to material and finish of adjacent landing plates. Provide landing plate and access floor plate without visible manufacturers name or logo.

D. Signal and Control Fixtures

1. Provide upper and lower newel or stanchion-mounted operating stations. Mount on right side when facing unit. Match deck finish. Identify Function and operating positions of switches and buttons with engraved characters that are readily visible from a standing position. Include the following at each station:

a. Red emergency stop button. Cover the button with a transparent cover that can be readily lifted or pushed aside. When the cover is moved, ensure an audible warning signal is activated. Ensure the signal has a minimum sound intensity of 80 dBA at the button location. Engrave the cover EMERGENCY STOP; MOVE COVER or equivalent legend (for example LIFT COVER); and PUSH BUTTON. EMERGENCY STOP in letters not less than 1/2 inch high. Engrave other required wording in letters not less than 3/16 inch high. Ensure the cover is self-resetting.

1) Provide emergency stop buttons at upper and lower landings; stop/start buttons inaccessible to the public on site; and a status monitoring control panel that may be remotely monitored in the LCC.

2) Emergency stop buttons shall cause an alarm at the LCC when activated.

b. Key switch to start unit.

c. Key directional control switch.

1) Each keyed switch shall be clearly and permanently labeled, including starting and direction selection.

d. Interlocks shall be provided to bring the escalator to a smooth stop, in either direction of travel, before a change of direction may be made.

e. Engraved Washington State Department of Labor & Industries conveyance number and escalator number.

E. Skirt/Balustrade Lighting

1. Provide LED skirt or balustrade panel lighting along entire path of travel on both sides of the unit.

a. Elongated round fixtures composed of multiple LED lights and protective cover.

1) Combplate light fixture or similar.

2) Fixtures spaced at 1-foot nominal interval.

3) Lighting shall provide a minimum of 1 foot candle (FC) at all points along entire path of travel, at tread level under emergency conditions.

2.05 ACCESSORIES

A. Signs:

1. Landing Signs: Provide caution signs at top and bottom landings according to Code, engraved plate with material and finish to match decking.

B. Key box:

1. Provide a keybox with hooks suitable for storing all escalator keys. Locate within Fire Command Center room.

a. All keys necessary for access, resetting or technical adjustment of escalators shall be included.

PART 3 - EXECUTION

3.01 EXAMINATION

A. Site Verification of Conditions

1. Prior to beginning the installation of equipment, examine wellway and pit areas. Verify that no irregularities exist that would affect quality of execution of work specified.

2. Do not proceed with installation until work in place conforms to Contract requirements.

3.02 INSTALLATION

A. Install all equipment in accordance with Manufacturer's instructions, referenced codes, Contract Specifications, and approved Submittals.

B. Install all equipment for ease of maintenance.

C. Install all equipment to afford maximum accessibility, safety, and continuity of operation.

D. Replace or refurbish all material to meet performance requirements outlined in these Contract Specifications prior to station turnover for normal operation. There will be an extended period of time from the point that the escalators are installed to the final acceptance and station revenue service operation.

E. Remove oil, grease scale, and other foreign matter from the following equipment and apply one coat of field-applied machinery enamel.

1. All exposed equipment and metal work installed as part of this work that does not have architectural finish.

2. Machine room equipment and truss.

3. Neatly touch up damaged factory-painted surfaces with original paint and color. Protect machine-finish surfaces against corrosion.

F. Coordinate access and escalator work with work of other trades for proper time and sequence to avoid construction delays. Use benchmarks, lines, and levels designated by Contractor to ensure dimensional coordination of Work.

G. Warp finish floor to level with the escalator floor plates but do not lay floor around escalator openings until escalator has been installed. Coordinate as required for installation.

H. Inspect site and verify embedded items are provided and correctly installed.

I. In event of notice of delay for access to Work, site storage at Contractor's facility will be required.

3.03 FIELD QUALITY CONTROL

A. Perform tests required by the Elevator Section of the Washington State Department of Labor and Industries. Perform tests in accordance with procedures described in ASME A17.2 Inspector's manual for Electric Elevators and Escalators and as required by the authorities having jurisdiction in the presence of the Resident Engineer.

B. Work at the jobsite will be checked during the course of installation. Full cooperation with reviewing personnel is mandatory. Accomplish corrective work required prior to performing further installation.

C. Have Code Authority acceptance inspection performed and complete corrective work.

3.04 ADJUSTING

A. Track alignment: Re-align factory installed tracks if required to ensure continuous four-point contact with step and chain rollers. Secure joints without gaps and file irregularities to a smooth surface.

B. Lubricate all equipment in accordance with Manufacturer's instructions.

C. Adjust motors, brakes, controllers, stopping switches, and safety devices to achieve required performance levels.

D. Adjust brakes and controlled descent devices to stop escalator with variable load without toppling passengers. Drive machine brakes shall stop the down running escalator at a rate no greater than 3 feet/second/second.

E. Adjust handrail speed to coincide with step speed.

3.05 CLEANING

A. Keep work areas orderly and free from debris during progress of Contract. Remove packaging materials on a daily basis.

B. Remove all loose materials and filings resulting from work.

C. Clean machine room equipment, truss interior, and pit.

D. Clean balustrades, deck boards, skirt panels, operating and signal fixtures, and trim.

E. Before Substantial Completion, remove all protective coverings and wrapping.

3.06 DEMONSTRATION

A. General: Furnish labor, materials, and equipment necessary for tests. Notify Resident Engineer five days in advance when ready for final review of each escalator unit or group. Final Acceptance of installation will be made only after all field quality control reviews have

been completed, identified deficiencies have been corrected, all Sound Transit's information and certificates have been received, and the following items have been completed to satisfaction of the Resident Engineer. Coordinate with Section 14 08 00 - Commissioning of Conveying Equipment, on commissioning requirements.

1. Workmanship and equipment: Comply with these Contract Specifications.

2. Contract speed and performance comply with these Contract Specifications.

3. Performance of following is satisfactory:

    a. Starting and running.

    b. Controlled descent.

    c. Stopping.

    d. Equipment noise levels.

    e. Signal and operating devices.

    f. Overall ride quality.

    g. Handrail speed.

    h. Safety devices.

4. Test Results:

    a. In all test conditions, obtain specified speed, handrail speed, controlled descent performance, stopping, ride quality, and operation noise levels to satisfaction of the Resident Engineer.

    b. Temperature rise in windings limited to 50 degrees C above ambient.

B. Personnel, Equipment, and Instruments: Furnish personnel, equipment, and instruments to perform required tests. The following instruments may be necessary to complete the tests:

1. Multi-meter.

2. 500-volt Megger.

3. Alternating current voltmeter and ammeter.

4. Celsius-calibrated thermometers (two minimum).

5. Precision tachometer.

6. Decibel meter for noise test.

7. Test weights for brake test.

C. Operating Tests:

1. Overspeed Protection Device: Test by operating at rated speed, tripping overspeed device manually.

2. Handrail-Tension Device: Test manually.

3. Broken Drive Chain Devices: Test by operating at rated speed, tripping broken chain device manually.

4. Insulation-Resistance Test: Test safety circuit and motor winding circuit at 500 volts. Minimum resistance to ground: 1 megohm.

5. Running Test: Submit certified copy of type test based on Item 320.6 of ASME A17.2.3 - Guide for Inspection of Elevators, Escalators and Moving Walks.

6. Demonstrate functionality of all remote monitoring and control terminations at ITC.

7. Sleep Mode: Test by verifying that the escalator meets the specified sequence of operations.

D. Field Review Scheduling: Schedule progress and final equipment reviews with the Resident Engineer. Reply promptly, in writing, to corrective work indicated on the Resident Engineer's progress and/or final review reports, indicating status, schedule for completion, and questions, diagnosis, and troubleshooting of escalator system.

3.07 TRAINING

A. Provide 2–4-hour sessions of onsite training for Sound Transit representatives in the proper use, operations and daily maintenance of escalators. The training shall:

1. Review emergency provisions, including emergency access and procedures to be followed at the time of failure in operation and other building emergencies.

2. Train ST personnel in normal procedures to be followed in checking for sources of operational failures or malfunctions.

3. Train Sound Transit personnel in escalator startup inspection requirements in accordance with ANSI A17.1 Section 8.6.11.6.1 through 8.6.11.6.4

4. Provide written documentation and instructional materials describing operational procedures covered during training for Sound Transit use in training future personnel.

END OF SECTION

SECTION 21 05 00

COMMON WORK RESULTS FOR FIRE SUPPRESSION

PART 1 - GENERAL

1.01 SUMMARY

A. Section includes:

1. Requirements for complete Fire Protection systems indicated on the drawings and this division's specifications. The Contract Documents and General Requirements of the specification are a part of this division of the specification.

1.02 REFERENCES

A. This Section incorporates by reference the latest revisions of the following documents:

1. Authorities Having Jurisdiction (AHJ) Current Fire Code and Building Code.

2. International Code Council (ICC):

a. International Building Code (IBC).

b. International Fire Code (IFC).

3. National Fire Protection Association (NFPA):

a. NFPA 13 Standard for the Installation of Sprinkler Systems.

b. NFPA 14 Standard for the Installation of Standpipe and Hose Systems.

c. NFPA 24 Standard for Installation of Private Fire Service Mains and Their Appurtenances.

B. Definitions:

1. Finished Spaces: Spaces other than mechanical and electrical equipment rooms, furred spaces, pipe chases, unheated spaces immediately below roof, space above ceilings, unexcavated spaces, crawlspaces, and tunnels.

2. Exposed, Interior Installations: Exposed to view indoors. Examples include finished occupied spaces and mechanical equipment rooms.

3. Exposed, Exterior Installations: Exposed to view outdoors or subject to outdoor ambient temperatures and weather conditions. Examples include rooftop locations.

4. Concealed, Interior Installations: Concealed from view and protected from physical contact by building occupants. Examples include above ceilings and in chases.

5. Concealed, Exterior Installations: Concealed from view and protected from weather conditions and physical contact by building occupants but subject to outdoor ambient temperatures. Examples include installations within unheated shelters.

1.03 SUBMITTALS

A. Submit:

1. Drawings:

a. Drawings are diagrammatic, indicating the general arrangement of systems and work. Examine the architectural drawings for exact location of fixtures and equipment. Where they are not definitely located, obtain this information from the Resident Engineer.

b. Follow drawings in laying out work and check drawings of other trades to verify spaces in which work will be installed. Maintain maximum headroom. If space conditions appear inadequate, notify the Resident Engineer before proceeding with the work. Make reasonable modifications in the work without extra cost as needed to prevent conflict with work of other trades and for proper execution of the work.

2. Product Data: For each type of product indicated.

3. Valve Schedule: Submit valve schedule organized by location and piping system using MS Word, 8.5 x 11 inches portrait orientation with title, headers, rows, and columns to serve as a maintenance reference. Tabulate valve type, valve-identification number, location. Identify system control valves that are intended for emergency shut-off and similar special using a column or “flag” in the margin of schedule. Furnish copies in riser rooms in a wall-mounted record box and submit with maintenance manuals.

4. Samples: Submit samples of each color, lettering style, and other graphic representation required for each identification material or system.

5. Documentation:

a. Provide as-built drawings of all building plans in accordance to Division 01 As-Built Documents specification. As-Built drawings must include as a minimum the location and performance data on each piece of equipment, general configuration of pipe distribution system, including sizes, and water design flow rates of the actual installation. As-Built drawings must also incorporate any work which deviates from the contract drawings, including changes resulting from addenda, Requests for Information, and Change Orders. Neatly draft changes on clean “hard copy” drawings to show the work clearly in the actual locations as built.

6. Operating Instructions:

a. Provide operating and maintenance instructions in accordance with Section 01 78 23 - Operation and Maintenance Data.

7. The training of the appropriate maintenance staff for each equipment type and/or system must include, as a minimum, the following:

a. System/Equipment overview (what it is, what it does and which other systems and/or equipment does it interface with).

b. Review of the available operations and maintenance (O&M) materials in accordance with Section 01 78 23 - Operation and Maintenance Data.

c. Review of the Record Drawings on the subject system/equipment, including valve schedules and zone distribution.

d. Hands-on demonstration of all normal maintenance procedures, normal operating modes, and all emergency shutdown and startup procedures.

1.04 QUALITY ASSURANCE

A. Material and Work:

1. Materials and equipment required for the work must be new and must be furnished, delivered, erected, installed, connected, and finished in every detail; and must be selected and arranged to fit properly into the building spaces. Where no specific kind or quality of material is given, an article as approved by the Resident Engineer must be provided.

2. Furnish the services of an experienced superintendent, who must be constantly in charge of the work.

3. Equipment and materials must be installed with the approval of the Resident Engineer in accordance with the recommendations of the manufacturer. This includes the performance of such tests as the manufacturer recommends.

B. Accessibility:

1. Install the work with adequate clearances throughout the project, including being responsible for the sufficiency of the size of shafts, chases, double partitions, and suspended ceilings. Such spaces and clearances must be kept to the minimum size required.

2. Locate all equipment that must be serviced, operated, or maintained in fully accessible positions. Minor deviations from drawings may be made to allow for better accessibility and any change must be approved by the Resident Engineer.

3. The Fire Protection Subcontractor must provide the General Contractor the exact locations of access panels for each concealed valve, or other device requiring service. Access panels will be provided and installed by the General Contractor and as specified in the other divisions of the specifications. Submit locations of these panels to the General Contractor in sufficient time to be installed in the normal course of work.

1.05 DELIVERY, STORAGE, AND HANDLING

A. Deliver materials and equipment in original, sealed containers or packages in an undamaged condition complete with labels and instructions for handling, storing, unpacking, protection and installing.

B. Deliver pipes and tubes with factory-applied end caps. Maintain end caps through shipping, storage and handling to prevent pipe end damage and corrosion, and to prevent entrance of dirt, debris, and moisture.

1.06 PROJECT CONDITIONS

A. Electrical Connections:

1. The power wiring and control wiring associated with fire suppression elements must be coordinated and provided by the Contract. Motors and equipment must be provided for current characteristics as indicated on the electrical drawings and be coordinated within the Contract to ensure proper function.

2. Provide control and electrical wiring details including power supply connections for any dry systems and accessories (including air compressors) requiring power and

control or any electrically activated valves that require interface with control systems.

B. Cutting and Patching:

1. Provide drilling, coring, cutting, and patching necessary to install the work specified in this division. Patching must match adjacent surfaces.

2. No structural members must be cut or core drilled without the approval of the Resident Engineer. Do not damage or endanger any portion of the project or work of the Owner or any other separate contractor by drilling, coring, cutting, patching, excavating, and backfilling.

3. Inform the General Contractor and other subcontractors affected of requirements for cutting and patching.

C. Boxes, Sleeves, and Chase:

1. Inform the General Contractor of requirements for boxes, sleeves, and chases. The General Contractor must set boxes, sleeves, and chases. Furnish General Contractor with the boxes and sleeves and be responsible for informing General Contractor of required location.

1.07 WARRANTY

A. The warranty disregards shorter time limits by any manufacturer of equipment provided.

B. Make all necessary adjustments and corrections during first year of operation. The fact that the Resident Engineer was present during any construction does not relieve the Contractor from responsibility for defects discovered after completion of the work.

PART 2 - PRODUCTS

2.01 COMPONENTS

A. Pipe Markers:

1. General Requirements for Manufactured Pipe Markers: Provide preprinted, color-coded, precoiled or self-adhesive pipe markers.

2. Pretensioned Pipe Markers: Precoiled, semirigid plastic formed to cover full circumference of pipe and to attach to pipe without fasteners or adhesive.

3. Self-Adhesive Pipe Markers: Printed plastic with contact-type, permanent-adhesive backing.

4. Pipe Markers Contents: Include identification of piping service using industry best practice terminology such as “fire protection” and “dry standpipe”:

a. Application: Supply, feed and crossmain pipes 2-1/2 inches and larger.

b. Lettering Size: At least 1-1/2 inches high.

c. Pipe Label Color Schedule:

1) Fire Suppression Piping:

a) Background Color: Red.

b) Letter Color: White.

B. Pipe, Tube and Fittings:

1. Refer to water-based fire suppression systems and clean agent fire suppression specifications for pipe, tube, and fitting materials and joining methods.

2. Pipe Threads: ASME B1.20.1 for factory-threaded pipe and pipe fittings.

C. Joining Material:

1. For special joining materials not listed below refer to water-based fire suppression systems and clean agent suppression system specifications..

2. Pipe-Flange Gasket Materials: ASME B16.21, nonmetallic, flat, asbestos-free, 1/8-inch maximum thickness unless thickness or specific material is indicated.

3. Solder Filler Metals: ASTM B32, lead-free alloys. Include water-flushable flux according to ASTM B813.

4. Brazing Filler Metals: AWS A5.8, BCuP Series or BAg1, unless otherwise indicated.

5. Welding Filler Metals: Comply with AWS D10.12M/D10.12.

D. Mechanical Sleeve Seals:

1. Description: Modular sealing element unit, designed for field assembly, to fill annular space between pipe and sleeve.

2. Sealing Elements: EPDM interlocking links shaped to fit surface of pipe. Include type and number required for pipe material and size of pipe.

3. Pressure Plates: Stainless steel. Include two (2) for each sealing element.

4. Connecting Bolts and Nuts: Stainless steel of length required to secure pressure plates to sealing elements. Include one for each sealing element.

5. See Section 21 05 17 – Sleeves and Sleeve Seals for Fire Piping for additional requirements.

E. Sleeves:

1. Galvanized-Steel Sheet: 0.0239-inch minimum thickness; round tube closed with welded longitudinal joint.

2. Steel Pipe: ASTM A53/A53M, Type E, Grade B, Schedule 40, galvanized, plain ends.

3. Cast Iron: Cast or fabricated "wall pipe" equivalent to ductile-iron pressure pipe, with plain ends and integral waterstop, unless otherwise indicated.

4. Stack Sleeve Fittings: Manufactured, cast-iron sleeve with integral clamping flange. Include clamping ring and bolts and nuts for membrane flashing:

a. Underdeck Clamp: Clamping ring with set screws.

5. See Section 21 05 17 – Sleeves and Sleeve Seals for Fire Piping for additional requirements.

F. Escutcheons

1. Description: Manufactured wall and ceiling escutcheons and floor plates, with an ID to closely fit around pipe, tube, and insulation of insulated piping and an OD that completely covers opening.

2. One-Piece, Deep-Pattern Type: Deep-drawn, box-shaped brass with polished chrome-plated finish.

3. One-Piece, Cast-Brass Type: With set screw:

a. Finish: Polished chrome plated.

4. Split-Casting, Cast-Brass Type: With concealed hinge and set screw:

a. Finish: Polished chrome plated.

G. Grout:

1. Description: ASTM C1107/C1107M, Grade B, non-shrink and nonmetallic, dry hydraulic-cement grout:

a. Characteristics: Post-hardening, volume-adjusting, nonstaining, noncorrosive, nongaseous, and recommended for interior and exterior applications.

b. Design Mix: 5000 pounds per square inch, 28-day compressive strength.

c. Packaging: Premixed and factory packaged.

2. See Section 21 05 17 – Sleeves and Sleeve Seals for Fire Piping for additional requirements.

PART 3 - EXECUTION

3.01 INSTALLATION

A. Cooperation with Other Trades:

1. Give full cooperation to other trades and furnish in writing to other trades, with copies to the Resident Engineer, any information necessary to permit the work of all trades to be installed satisfactorily and with the least possible interference or delay.

2. Where Fire Protection work will be installed close to, or interfere with other trades' work, coordinate with other trades to make a satisfactory adjustment. If work is installed before coordinating with other trades, or if it causes any interference with work of other trades, make the necessary changes in the work to correct the conditions.

3. Furnish to other trades necessary templates, patterns, setting drawings and shop details for the proper installation of work and for coordinating adjacent work. This includes participation and support of any Building Information Modeling efforts associated with this contract.

B. Piping Systems:

1. Contract Drawing, schematics, and diagrams indicate general location and arrangement of piping systems. Indicated locations and arrangements were used to size pipe and calculate friction loss, expansion, pump sizing, and other design considerations. Install piping as indicated unless deviations to layout are approved on Coordination Drawings.

2. Install piping in concealed locations, unless otherwise indicated and except in equipment rooms and service areas.

3. Install piping indicated to be exposed and piping in equipment rooms and service areas at right angles or parallel to building walls. Diagonal runs are prohibited unless specifically indicated otherwise.

4. Install piping above accessible ceilings to allow sufficient space for ceiling panel removal.

5. Install piping to permit valve servicing.

6. Install piping at indicated slopes.

7. Install piping free of sags and bends.

8. Install piping for dry-pipe and preaction systems to fully drain and not trap water at expansion joints.

9. Install fittings for changes in direction and branch connections.

10. Install piping to allow application of insulation, when applicable.

11. Select system components with pressure rating equal to or greater than system operating pressure.

12. Install escutcheons for penetrations of finished walls, ceilings, and floors.

13. Install sleeves for pipes passing through concrete and masonry walls, gypsum board partitions, and concrete floor and roof slabs.

14. Aboveground, Exterior-Wall Pipe Penetrations: Seal penetrations using sleeves and mechanical sleeve seals. Select sleeve size to allow for 1-inch annular clear space between pipe and sleeve for installing mechanical sleeve seals:

    a. Install steel pipe for sleeves smaller than 6 inches in diameter.

    b. Install cast-iron "wall pipes" for sleeves 6 inches and larger in diameter.

    c. Mechanical Sleeve Seal Installation: Select type and number of sealing elements required for pipe material and size. Position pipe in center of sleeve. Assemble mechanical sleeve seals and install in annular space between pipe and sleeve. Tighten bolts against pressure plates that cause sealing elements to expand and make watertight seal.

15. Underground, Exterior-Wall Pipe Penetrations: Install cast-iron "wall pipes" for sleeves. Seal pipe penetrations using mechanical sleeve seals. Select sleeve size to allow for 1-inch annular clear space between pipe and sleeve for installing mechanical sleeve seals:

a. Mechanical Sleeve Seal Installation: Select type and number of sealing elements required for pipe material and size. Position pipe in center of sleeve. Assemble mechanical sleeve seals and install in annular space between pipe and sleeve. Tighten bolts against pressure plates that cause sealing elements to expand and make watertight seal.

16. Fire-Barrier Penetrations: Maintain indicated fire rating of walls, partitions, ceilings, and floors at pipe penetrations. Seal pipe penetrations with firestop materials and systems as required by the Contact.

17. Install floor plates for piping penetrations of equipment-room floors. Install floor plates with ID to closely fit around pipe, tube, and insulation of piping and with OD that completely covers opening.

18. Verify final equipment locations for roughing-in.

19. Install flexible expansion joints where indicated on drawings and where piping crosses building seismic joints. Install vertical support hanger within 4 pipe diameters on each side of the flexible joints and seismic joint. Brace each hanger longitudinally and transversely. Install vertical support at 180-degree return bend.

C. Equipment:

1. Install equipment to allow maximum headroom unless specific mounting heights are not indicated.

2. Install equipment level (pitched for dry-pipe and preaction systems to drain) and plumb, parallel and perpendicular to other building systems and components in exposed interior spaces, unless otherwise indicated.

3. Install fire suppression equipment to facilitate service, maintenance, and repair or replacement of components. Connect equipment for ease of disconnecting, with minimum interference to other installations. Extend grease fittings to accessible locations.

4. Install equipment to allow right of way for piping installed at required slope.

D. Padlock and Chain System at Standpipe Isolation Valves:

1. For standpipe isolation valves not wired for tamper switches, provide chain and breakaway padlock at each valve.

2. Valves must be locked in the open position unless otherwise indicated in the drawings.

3. Padlocks must be keyed to ST standard: Master Model 500KABRKLH, UNSPSC 46171501.

4. Chain must be secured tightly around the standpipe so that chain does not hang loose. Padlock must be located to be fully accessible.

E. Construction:

1. Join pipe and fittings according to the following requirements.

2. Ream ends of pipes and tubes and remove burrs. Bevel plain ends of steel pipe.

3. Remove scale, slag, dirt, and debris from inside and outside of pipe and fittings before assembly:

a. Threaded Joints: Cut threads full and clean using sharp dies. Ream threaded pipe ends to remove burrs and restore full ID. Join pipe fittings and valves as follows:

1) Apply appropriate tape or thread compound to external pipe threads unless dry seal threading is specified.

2) Damaged Threads: Do not use pipe or pipe fittings with threads that are corroded or damaged.

4. Soldered Joints: Apply water-flushable flux, unless otherwise indicated, to tube end. Construct joints using lead-free solder alloy.

5. Brazed Joints: Construct joints using copper-phosphorus brazing filler metal.

6. Threaded Joints: Thread pipe with tapered pipe threads according to ASME B1.20.1. Cut threads full and clean using sharp dies. Ream threaded pipe ends to remove burrs and restore full ID. Join pipe fittings and valves as follows:

a. Apply appropriate tape or thread compound to external pipe threads unless dry seal threading is specified.

b. Damaged Threads: Do not use pipe or pipe fittings with threads that are corroded or damaged.

c. Damaged Threads: Do not use pipe sections that have cracked or open welds.

7. Welded Joints: Refer to water-based fire suppression and clean agent fire suppression systems for welded joints.

8. Flanged Joints: Select appropriate gasket material, size, type, and thickness for service application. Install gasket concentrically positioned. Use suitable lubricants on bolt threads.

F. Pipe Connections: Make connections according to the following, unless otherwise indicated:

1. Wet Piping Systems: Install dielectric coupling and nipple fittings to connect piping materials of dissimilar metals.

2. Underground, Exterior-Wall Penetrations: Install dielectric couplings and isolate flange gaskets for all underground piping connections the above piping. Coordinate locations and installation with corrosion control systems.

G. Concrete Bases:

1. Anchor equipment to concrete base according to equipment manufacturer’s written instructions and according to Authority having Jurisdiction and Concrete Division 03 Anchorage to Concrete Specifications.

a. Construct concrete bases of dimensions indicated, but not less than 4 inches larger in both directions than supported unit with chamfer edges.

b. Install dowel rods to connect concrete base to concrete floor as shown on Issued for Construction structural drawings.

c. Install Type 304 stainless steel expansion anchors for supported equipment that extends through concrete base, and anchor into structural concrete floor. Provide dielectric insulation between dissimilar metals.

d. Place and secure anchorage devices. Use supported equipment manufacturer's setting drawings, templates, diagrams, instructions, and directions furnished with items to be embedded.

e. Install anchor bolts to elevations required for proper attachment to supported equipment.

f. Install anchor bolts according to anchor-bolt manufacturer's written instructions.

g. Use minimum 4,000-psi, 28-day compressive-strength concrete.

h. Coordinate locations and installation with corrosion control systems.

3.02 PREPARATION FOR IDENTIFICATION INSTALLATION

A. Clean piping and equipment surface of substances that could impair bond of identification devices, including dirt, oil, grease, release agents, and incompatible primers, paints, and encapsulants.

B. Coordinate installation with piping painting, insulation and heat trace installation as required.

3.03 IDENTIFICATION

A. Equipment Signage/Label Installation

1. See Section 21 11 00 - Water-Based Fire Suppression Systems for fire sign and label requirements for water-based fire suppression systems.

2. Install or permanently fasten labels on each major item of fire suppression equipment.

3. Locate equipment labels where accessible and visible.

4. For clean agent and other fire protection systems provide warning signs, equipment signs and labels in accordance with the International Fire Code, NFPA 2001, and other applicable standards:

a. All signage and labels must be secured with fasteners, adhesive, or other approved means as outlined in this specification.

b. All signs exposed to moisture, varying temperatures and sunlight must be designed to perform in the environment.

c. Valve/Equipment Labels:

5. Label Content:

a. Include equipment's Contract Drawing designation or unique equipment number, Contract Drawing numbers where equipment is indicated (plans, details, and schedules).

b. Information indicating the type of valve or equipment, and area served, when fire department interface is expected and when required by codes and standards.

6. Material and Thickness: Multilayer, multicolor, phenolic engraved white lettering on red background, 1/8 inch thick, and having predrilled holes for attachment hardware if the label is to be mounted with fasteners.

7. Identification: Provide the unique identifying number complying with Sound Transit standards and requirements.

8. Minimum Label Size: Length and width vary for required label content, but not less than 2-1/2 inches by 3/4 inch.

9. Minimum Letter Size: 1 inch and proportionately larger lettering for greater viewing distances. Include secondary lettering (e.g. identification number) two-thirds to three-fourths the size of principal lettering.

10. Fasteners: Stainless-steel rivets or stainless-steel self-tapping screws.

11. Adhesive: Contact-type permanent adhesive, compatible with label and with substrate.

B. Pipe Marker Installation:

1. Locate pipe marker where piping is exposed or above accessible ceilings in finished spaces; machine rooms; accessible maintenance spaces such as shafts, tunnels, and plenums; and exterior exposed locations as follows:

a. Near each valve and device.

b. Near each branch connection, excluding short takeoffs for sprinklers.

c. Near penetrations through walls, floors, ceilings, and inaccessible enclosures.

d. At access doors, manholes, and similar access points that permit view of concealed piping.

e. Near major equipment items and other points of origination and termination.

f. Spaced at maximum intervals of 50 feet along each run. Reduce intervals to 25 feet in areas of congested piping and equipment.

g. On piping above removable acoustical ceilings. Omit intermediately spaced labels.

3.04 CLEANING

A. Promptly remove waste material and rubbish caused by the work. At the Completion of the work, clean the dirt and debris from the fire suppression installation, including equipment, and piping.

END OF SECTION

SECTION 21 05 17

SLEEVES AND SLEEVE SEALS FOR FIRE PIPING

PART 1 - GENERAL

1.01 SUMMARY

A. Section Includes:

1. Requirements for the following:

a. Sleeves.

b. Stack-sleeve fittings.

c. Sleeve-seal systems.

d. Sleeve-seal fittings.

e. Grout.

1.02 REFERENCES

A. This Section incorporates by reference the latest revisions of the following documents:

2. ASTM International (ASTM):

a. ASTM A53.

b. ASTM E84/E814.

c. ASTM A377.

d. ASTM A-653.

e. ASTM A-888.

f. ASTM C1107.

3. Underwriter Laboratories (UL):

a. UL (FRD) – Fire Resistance Directory.

1.03 SUBMITTALS

A. Transmit:

1. Product Data: For each type of product indicated (Submittals shall be reviewed by Plumbing and Structural DOR for applicability.)

PART 2 - PRODUCTS

2.01 MATERIALS

A. Sleeves:

1. Cast-Iron Wall Pipe Sleeves: ASTM A377, Cast or fabricated of cast or ductile iron and equivalent to ductile-iron pressure pipe, with plain ends and integral waterstop unless otherwise indicated.

2. Cast Iron Pipe sleeves: ASTM A-888 Cast Iron pipe with plain ends.

3. Galvanized-Steel Wall Pipes: ASTM A 53/A 53M, Schedule 40, with plain ends and welded steel collar; zinc coated or equal corrosion inhibitor coating as approved by the Resident Engineer.

4. Galvanized-Steel-Pipe Sleeves: ASTM A53/A 53M, Type E, Grade B, Schedule 40, zinc coated, with plain ends.

5. Galvanized-Steel-Sheet Sleeves: ASTM A653, 0.0239-inch minimum thickness; round tube closed with welded longitudinal joint.

B. Grout:

1. Standard: ASTM C 1107/C 1107M, Grade B, post-hardening and volume-adjusting, dry, hydraulic-cement grout.

2. Characteristics: Nonshrink productrecommended by the manufacturer for interior and exterior use, as applicable.

3. Design Mix: 5000-psi, 28-day compressive strength.

4. Packaging: Premixed and factory packaged.

2.02 MANUFACTURED PRODUCTS

A. Stack-Sleeve Fittings:

1. Manufacturers: Subject to compliance with requirements, available manufacturers offering products that may be incorporated into the Work include, but are not limited to, the following:

a. Jay R. Smith Mfg. Co.

b. Wade.

c. Zurn.

2. Description: Manufactured, cast-iron sleeve with integral clamping flange. Include clamping ring, bolts, and nuts for membrane flashing:

a. Underdeck Clamp: Clamping ring with setscrews.

B. Sleeve-Seal Systems:

1. Manufacturers: Subject to compliance with requirements, available manufacturers offering products that may be incorporated into the Work include, but are not limited to, the following:

a. Advance Products & Systems, Inc.

b. CALPICO, Inc.

c. The Metraflex Company.

d. Pipeline Seal and Insulator, Inc.

e. Link-Seal - GPT an EnPro Industires, Inc.

2. Description: Modular sealing-element unit, designed for field assembly, for filling annular space between piping and sleeve:

a. An assembly consisting of a stainless steel frame, a compression mechanism, and insert modules for pipe, duct, and tubing.

b. Comply with F- and T-ratings as required by local codes, code official, and as tested in accordance with ASTM E814 or UL1479.

c. Sealing Elements: EPDM-rubber interlocking links shaped to fit surface of pipe. Include type and number required for pipe material and size of pipe.

d. Designs must be water and gas tight to 14.5 psi:

1) Seals shall be asbestos free, lead free, halogen free.

2) Pressure Plates: Stainless steel.

3) Connecting Bolts and Nuts: Stainless steel of length required to secure pressure plates to sealing elements.

C. Sleeve-Seal Fittings:

1. Manufacturers: Subject to compliance with requirements, available manufacturers offering products that may be incorporated into the Work include, but are not limited to, the following:

a. HoldRite.

b. The Metraflex Company.

c. Pipeline Seal and Insulator, Inc.

2. Description: Manufactured plastic, sleeve-type, waterstop assembly made for imbedding in concrete slab or wall. Unit has plastic or rubber waterstop collar with center opening to match piping OD.

PART 3 - EXECUTION

3.01 SLEEVE INSTALLATION

A. Install sleeves for piping passing through penetrations in floors, partitions, roofs, and walls. Provide appropriate waterproofing when penetrating exterior envelope.

B. For sleeves that will have sleeve-seal system installed, select sleeves of size large enough to provide 1-inch annular clear space between piping and concrete slabs and walls. Sleeves shall be two inches larger than proposed pipe diameter:

1. Sleeves are not required for core-drilled holes.

C. Install sleeves in concrete floors, concrete roof slabs, and concrete walls as new slabs and walls are constructed.

1. Permanent sleeves are not required for holes in slabs formed by molded-PE or -PP sleeves.

2. Cut sleeves to length for mounting flush with both surfaces:

a. Exception: Extend sleeves installed in floors of mechanical equipment areas or other wet areas 2 inches above finished floor level.

3. Using grout, seal the space outside of sleeves in slabs and walls without sleeve-seal system.

D. Install sleeves for pipes passing through interior partitions:

1. Cut sleeves to length for mounting flush with both surfaces.

2. Install sleeves that are large enough to provide 1/4-inch annular clear space between sleeve and pipe or pipe insulation.

3. Seal annular space between sleeve and piping or piping insulation; use joint sealants appropriate for size, depth, and location of joint. Comply with applicable codes and standards requirements for joint sealants.

E. Fire-Barrier Penetrations: Maintain indicated fire rating of walls, partitions, ceilings, and floors at pipe penetrations. Seal pipe penetrations with firestop materials and systems as required by the Contract. Comply with applicable codes and standards requirements for firestopping.

3.02 STACK-SLEEVE-FITTING INSTALLATION

A. Install stack-sleeve fittings in new slabs as slabs are constructed:

1. Install fittings that are large enough to provide 1/4-inch annular clear space between sleeve and pipe or pipe insulation.

2. Secure flashing between clamping flanges for pipes penetrating floors with membrane waterproofing. Comply with requirements applicable codes and standard for flashing.

3. Install section of pipe to extend sleeve to 2 inches above finished floor level.

4. Extend sleeve fittings below floor slab as required to secure clamping ring if ring is specified.

5. Using grout, seal the space around outside of stack-sleeve fittings.

B. Fire-Barrier Penetrations: Maintain indicated fire rating of floors at pipe penetrations. Seal pipe penetrations with firestop materials and systems as required by the Contract. Comply with applicable codes and standards requirements for firestopping.

3.03 SLEEVE-SEAL-SYSTEM INSTALLATION

A. Install sleeve-seal systems in sleeves in exterior concrete walls above and below grade and slabs-on-grade at service piping entries into building.

B. Select type, size, and number of sealing elements required for piping material and size and for sleeve ID or hole size. Position piping in center of sleeve. Center piping in penetration, assemble sleeve-seal system components, and install in annular space between piping and sleeve. Tighten bolts against pressure plates that cause sealing elements to expand and make a watertight seal.

C. Fire-Barrier Penetrations: Maintain indicated fire rating of wall, floor at pipe penetrations. Seal pipe penetrations with firestop materials as required by the Contract. Comply with applicable codes and standards requirements for firestopping.

3.04 SLEEVE-SEAL-FITTING INSTALLATION

A. Install sleeve-seal fittings in new walls and slabs as they are constructed.

B. Assemble fitting components of length to be flush with both surfaces of concrete slabs and walls. Position waterstop flange to be centered in concrete slab or wall.

C. Secure nailing flanges to concrete forms.

D. Using grout, seal the space around outside of sleeve-seal fittings.

E. Fire-Barrier Penetrations: Maintain indicated fire rating of wall, floor at pipe penetrations. Seal pipe penetrations with firestop materials and systems as required by the Contract. Comply with applicable codes and standards requirements for firestopping.

3.05 SLEEVE AND SLEEVE-SEAL SCHEDULE

A. Use sleeves and sleeve seals for the following piping-penetration applications:

1. Concrete structural elements (Not covered elsewhere in sleeve and sleeve-seal schedule):

a. Piping Smaller Than NPS 6: Cast Iron pipe sleeves.

b. Piping NPS 6 and Larger: Cast Iron pipe sleeves.

2. Exterior Concrete Walls above Grade:

a. Piping Smaller Than NPS 6: Cast-iron wall pipe sleeves with sleeve-seal system:

1) Select sleeve size to allow for 1-inch annular clear space between piping and sleeve for installing sleeve seal system.

b. Piping NPS 6 and Larger: Cast-iron wall pipe sleeves-seal system:

1) Select sleeve size to allow for 1-inch annular clear space between piping and sleeve for installing sleeve seal system.

3. Exterior Concrete Walls below Grade:

a. Piping Smaller Than NPS 6: Cast-iron wall pipe sleeves with sleeve-seal system:

1) Select sleeve size to allow for 1-inch annular clear space between piping and sleeve for installing sleeve-seal system.

b. Piping NPS 6 and Larger: Cast-iron wall pipe sleeves with sleeve-seal system:

1) Select sleeve size to allow for 1-inch annular clear space between piping and sleeve for installing sleeve-seal system.

4. Concrete Slabs-on-Grade:

a. Piping Smaller Than NPS 6: Cast-iron wall pipe sleeves with sleeve-seal system:

1) Select sleeve size to allow for 1-inch annular clear space between piping and sleeve for installing sleeve-seal system.

b. Piping NPS 6 and Larger: Cast-iron wall pipe sleeves with sleeve-seal system:

1) Select sleeve size to allow for 1-inch annular clear space between piping and sleeve for installing sleeve-seal system.

5. Concrete Slabs above Grade:

a. Piping Smaller Than NPS 6: Galvanized-steel-pipe sleeves Stack-sleeve fittings.

b. Piping NPS 6 and Larger: Galvanized-steel-pipe sleeves Stack-sleeve fittings.

6. Interior Partitions:

a. Piping Smaller Than NPS 6: Galvanized-steel-pipe sleeves.

b. Piping NPS 6 and Larger: Galvanized-steel-sheet sleeves.

END OF SECTION

SECTION 21 08 00

COMMISSIONING OF FIRE SUPPRESSION

NOTE TO DESIGNER:

SECTIONS WITH BRACKETS. E.G., [TEXT] ARE TO BE MODIFIED OR DELETED IF NOT APPLICABLE. ITALICIZED TEXT PROVIDES INSTRUCTION TO THE DESIGNER TO INCLUDE LANGUAGE ON SPECIFIC TOPICS WHEN APPLICABLE. THE INSTRUCTIONS ARE TO BE DELETED WHEN THE SPECIFICATION IS FINALIZED. LANGUAGE NOT IN BRACKETS IS TO BE USED 'AS IS' WITHOUT MODIFICATION OR WITH AN APPROVED SPECIFICATION MODIFICATION REQUEST.

DESIGNER TO DELETE TEXT ABOVE FOR FINAL SECTION

PART 1 - GENERAL

1.01 SUMMARY

A. Section Includes:

1. Requirements for commissioning process requirements for includes automatic sprinkler systems, standpipe systems, fire suppression related heat tracing/insulation, clean agent suppression systems including releasing systems, pre-action sprinkler systems, fire extinguishers, and fire pumps:}:

a. Level 1 commissioning activities for Fire Suppression.

b. Level 2 commissioning activities for Fire Suppression.

c. [Support for Level 3 commissioning activities related to Fire Suppression].

d. [Support for Level 4 commissioning activities related to Fire Suppression].

[Designer: Level 3 and 4 commissioning activities are not included in this standard specification and need to be added if any tests are necessary.]

B. Definitions

1. See general commissioning requirements (Section 01 91 13 – General Systems Testing and Commissioning Requirements).

2. Command: When used in the description of a commissioning activity, command means to use the station human machine interface (HMI) for the building management system (BMS) to control systems, equipment, and components.

3. Systems, Equipment, and Components: Where these terms are used together or separately, they mean "as-built" systems, equipment, and components.

4. Human Machine Interface (HMI): Equipment, software, and functional programming at the locations shown on the Plans and as specified in the requirements of field control system as required in the Contract.

1.02 COORDINATION

A. See general commissioning requirements (Section 01 91-13 – General Systems Testing and Commissioning Requirements) for general coordination requirements related to commissioning. Some Level 1 and all Level 2 activities require coordination with other trades.

B. Tests observed by the AHJ (e.g., fire department) may be conducted concurrently but pre-testing must be performed to ensure the system is ready and will pass inspection.

1.03 COMMISSIONING ACTIVITIES

A. Commissioning work includes: Work furnishes labor and material to accomplish building commissioning to comply with the general commissioning requirements as required by the Contact and this specification, including:

1. Provide to the Testing and Commissioning Manager preliminary O&M information for use in developing commissioning test procedures.

2. Testing and Commissioning Manager Develop commissioning activity checklists, procedures and data forms submittals for work specified in this Section.

3. Provide information to the Testing and Commissioning Manager needed for control interface wiring diagrams submittals for the work of this Section.

4. Perform Level 1 commissioning activities specified in this Section, including installation verification, static tests, start-up, component tests, equipment tests, systems tests.

5. Perform Level 2 commissioning activities specified in this Section, including intra-station system interface tests.

6. Provide support for Level 3 commissioning activities, including jointly with the communications system contractor field testing points in the interface terminal strips, being present during level 3 testing with adequate labor and support personnel to adjust equipment and troubleshoot system failures that might arise. When material or equipment provided by this Division is found to conflict with specified criteria, adjust or replace said material or equipment, with the assistance of manufacturer as needed.

7. Provide support for Level 4 commissioning activities, including providing adequate labor and support personnel to adjust equipment and troubleshoot system failures that might arise during pre-revenue testing.

8. Operate equipment and system during commissioning activities as required by the Testing and Commissioning Manager.

9. Perform and document commissioning tests to verify readiness for commissioning test demonstration. Commissioning tests are specified un this specification.

10. Correct issues and repeat commissioning tests when results do not meet acceptance criteria.

11. Commissioning Test Demonstrations: General requirements for commissioning test demonstrations must comply with the general commissioning requirements,

Level 1 and Level 2 commissioning activity commissioning test demonstrations as required by the Contract:

a. Repeat commissioning tests on a sample basis to demonstrate acceptable performance: Level 1 Component, Equipment, and System Commissioning Tests, and for Level 2 Intra-station system interface tests.

b. Record and submit commissioning test demonstration data and issues.

c. Correct issues and repeat commissioning test demonstration when results do not meet Acceptance Criteria.

12. Attend commissioning meetings as requested by the Testing and Commissioning Manager.

13. Report any inconsistencies or issues in system operations or performance.

14. If a commissioning test demonstration fails, assist in determining the cause of failure. Make corrections, as necessary.

B. Support the Testing and Commissioning Manager to accomplish commissioning work on schedule and in coordination with other trades.

1.04 QUALITY ASSURANCE

A. Coordinate completion of Install Verification forms, by the Quality Control Inspector, as identified in the Contractors Quality Control Inspection and Test Plan.

PART 2 - PRODUCTS

2.01 TEST EQUIPMENT

A. Provide test equipment and instrumentation, including consumable supplies, required to execute commissioning activities. Unless noted otherwise, test equipment and instrumentation remain the property of the Contractor.

B. Provide proof of calibration of test equipment. Test equipment must be calibrated within one (1) year of use. A sticker from the calibration laboratory must be affixed to the test equipment indicating date of calibration.

C. Provide proprietary test instruments or tools required by the equipment manufacturer. Provide and operate the proprietary test instruments or tools as required for commissioning work.

PART 3 - EXECUTION

3.01 LEVEL 1 AND 2 COMMISSIONING ACTIVITIES REQUIREMENTS

A. Technical requirements for commissioning of Fire Suppression are included in this specification.

B. Provide technicians, instrumentation, and tools to perform commissioning activities in accordance with accepted commissioning activity procedures at the direction of the Testing and Commissioning Manager.

C. Scope of Fire Suppression commissioning activities applies to all portions of the Fire Suppression installation described in the test.

D. Upon approval of product submittals associated with the technical requirements and the scope of Commissioning develop and submit for approval Install Verification Checklist forms for the quality criteria of this specification.

E. Preparation:

1. Certify that Fire Suppression, subsystems, and equipment have been completed, calibrated, and started; and are operating in accordance with Contract Documents.

2. Testing Instrumentation: Install measuring instruments and logging devices to record test data in accordance with accepted commissioning test procedures as directed by the Testing and Commissioning Manager.

3. Certify that Fire Suppression instrumentation and control systems are completed and calibrated; operating according to the Contract Documents; and that pretest set points are recorded.

4. Set systems, subsystems, and equipment into operating mode to be tested (e.g., normal shut down, normal auto position, normal manual position, unoccupied cycle, emergency power, and alarm conditions) in accordance with accepted commissioning test procedures as directed by the Testing and Commissioning Manager.

F. Coordinate with GC and other parties for testing alarms and for safe discharge of water to ensure job site safety, prevent damage to landscape, and prevent debris from obstructing drains. Test all operating modes, interlocks, control responses, responses to abnormal or emergency conditions, and verify proper response of building automation system controllers and sensors.

G. Perform tests using design conditions whenever possible.

H. Simulated conditions may need to be imposed using an artificial load when it is not practical to test under design conditions. Provide equipment to simulate loads. Set simulated conditions in accordance with accepted commissioning test procedures as directed by the Testing and Commissioning Manager. Document simulated conditions and methods of simulation. After tests, return settings to normal operating conditions.

I. Request approval to alter set points when simulating conditions is not practical.

J. Request approval to alter sensor values with a signal generator when design or simulating conditions and altering set points are not practical.

K. If tests cannot be completed because of a deficiency outside the scope of the Fire Suppression system, document the deficiency and report it to Sound Transit. After deficiencies are resolved, reschedule tests.

L. Where seasonal testing is specified, complete appropriate initial commissioning tests and documentation within the Construction Period. Schedule and execute seasonal tests when specified conditions are expected.

M. Commissioning documents must include testing requirements as required by the Contract, adopted codes and standards and the criteria outlined in this specification.

3.02 LEVEL 1 AND LEVEL 2 COMMISSIONING ACTIVITY PROCEDURES

A. Submit a single (combined) commissioning document (checklists, procedures, forms) for all Level 1 commissioning activities as outlined below for each system type for review and approval as outlined in Section 01 91-13 – General Systems Testing and Commissioning Requirements. The document must be broken up into sections with each activity a separate section with a specific sub header. Completed sections for each activity group (IV, ST, SU, C, E and S) must be submitted upon completion:

1. Level 1 commissioning activities:

   a. Installation verification (IV).

   b. Static tests (ST).

   c. Start-up procedures (SU).

   d. Component tests (C).

   e. Equipment tests (E).

   f. System tests (S).

2. Level 1 system types include:

   a. Automatic sprinkler systems (wet, dry, preaction) including compressors,

   b. [Guideway standpipe systems (manual dry and semiautomatic)].

   c. Building/station standpipe system (manual wet and manual dry).

   d. [Fire suppression system heat tracing/insulation].

   e. [Clean agent detection system].

   f. Fire extinguishers.

   g. [Fire pumps].

3. Level 2 commissioning activities:

   a. Clean Agent System smoke dampers Control.

   b. Clean Agent System HVAC Interface via BMS.

   c. [Clean Agent Communication with FAS].

   d. Sprinkler system waterflow and tamper interface with FAS.

   e. [Fire Pump Interface with FAS].

   f. [Control of tunnel deluge valves via FAS].

   g. [Other Intra-station system interface tests].

3.03 LEVEL 1 INSTALLATION VERIFICATION CHECKLIST REQUIREMENTS

A. Installation verification checklist forms must include the following:

1. Organization to prompt the installer to check off quality criteria for each discrete portion of the Work.

2. Identify the location and commissioning activity number at the top of the form.

3. Section for verification of delivery of accepted materials

4. Section for condition of materials at delivery

5. Section for description of installation steps. Include manufacturer's installation instructions.

6. Space at the end of the form for the installer to print their name and company name, fill in the date, and sign or initial.

7. Space at the end of the form for the Quality Control inspector designated for the scope to review and accept installation verification. QC Inspector must perform Install Verification and verify each element identified in form has been reviewed for conformance with contract documents and in accordance with the Contractors Quality Control Inspection and Test Plan as part of Section 01 45 00 – Quality Assurance / Quality Control.

8. Space to identify the area of work for which the installer is executing the Installation Verification Checklist

9. Description of the quality criteria as it pertains to the specific work. Include a checkbox for each criterion.

10. Example checklist/test form can be provided upon request.

B. Quality Criteria: Installation verification checklists must address the following quality criteria:

1. Record and ensure the equipment, wire, and cable make and model match accepted submittals.

2. Equipment is installed without visible damage.

3. Equipment is clean and free of debris.

4. Location is as indicated on drawings.

5. Equipment is accessible for maintenance using safe work practices.

6. There is sufficient space to remove and replace components intact without demolishing other work.

7. Installation in accordance with accepted shop drawings, pipeline layout drawings, support and seismic design submittal, manufacturers' requirements, and contract documents.

C. Fill out and sign installation verification checklists for Equipment while the Work is being installed. Fill out and sign the installation verification checklist as work proceeds to improve the quality of the installation. Retain completed installation verification checklists on site for review.

D. Before performing a commissioning test, installation verification checklists must be performed and completed by QC inspector designated for the appropriate area specified here in and within the Contractors Quality Control Inspection and Test Plan as part of Section 01 45 00 - Quality Assurance / Quality Control. Submit completed installation verification checklists for work included in the commissioning test.

3.04 LEVEL 1 INSTALLATION VERIFICATION

A. Installation verification checklists are required for the following, minimum:

1. 2108-IV-01 Heat Tracing for Fire Suppression, including:

    a. Heating cable installation, securement, termination.

    b. Heater trace circuit controller.

    c. Remote temperature sensor.

2. 2108-IV-02 Fire Suppression Systems Insulation, including:

    a. Insulation material installation.

    b. Sealants.

    c. Jackets.

    d. Securements.

    e. Tests and inspections in accordance with the requirements of fire suppression systems insulation as required by the Contract Documents.

3. 2108-IV-03 Water-Based Fire Suppression, including:

    a. Above and underground piping.

    b. Couplings.

    c. Mechanical fittings.

    d. Threaded fittings.

    e. Alarm test valve.

    f. Gate valves.

    g. Backflow preventer.

    h. Forward flow test outlets.

    i. Ball valves.

    j. Butterfly control valves.

    k. Isolation valves.

    l. Post indicator valve and tamper switch.

    m. Check valves.

    n. Dry-pipe valves/Wet-pipe riser assembly/Deluge valves.

    o. Compressors and air maintenance devices.

    p. Flow/Pressure/Tamper switches.

    q. Automatic drain valves.

r. Automatic air/vacuum valves.

s. Drain valves/Drum drips.

t. Air Vent valves/Pressure relief valves.

u. Seismic expansion joints.

v. Sprinkler heads.

w. Fire hose valves/Fire hose valve cabinets.

x. Fire department connections.

y. Anchors/Supports/Bracing.

4. 2108-IV-04 Clean Agent System, including:

a. Pipe and fittings.

b. Nozzles.

c. Agent release valves.

d. Extinguishing agent containers and bracing.

e. Discharge nozzles.

f. Control/releasing panels.

g. Detection devices.

h. System wire/cable including interface wiring.

i. Manual stations.

j. Abort switches.

k. Maintenance bypass Switches.

l. Notification devices.

m. Electrical power wiring and circuit breaker.

5. [2108-IV-05 Fire Pump]:

a. [Piping and fittings].

b. [Fire pump].

c. [Jockey pump].

d. [Driver].

e. [Pressure relief Valve].

f. [Controller and associated wire/conduit].

g. [Test header].

h. [Gages].

i. [Valves].

j. [Other key components as outlined in NFPA 20].

6. 2108-IV-06 Fire Extinguisher Cabinets/Hangers:

a. Cabinets.

b. Sheetrock for fire rated framed wall recessed mounting.

c. Signage.

d. Hangers for surface mounted units.

3.05 LEVEL 1 STATIC TESTS

A. 2108-ST-01: Flushing of Piping:

1. System/Equipment to be Tested:

a. Underground mains and lead in connections to automatic sprinkler systems.

b. Underground portion of Standpipes systems.

2. Functions to be Tested:

a. Clean pipe - flushing debris from piping.

3. Conditions of the Test:

a. Flush as outlined in NFPA 24.

4. Acceptable Results:

a. Flush until discharge water is clean.

b. Provide completed Contractor's material and test certificate.

B. 2108-ST-02: Hydrostatic Test:

1. System/Equipment to be tested:

a. Underground mains and lead in connections to automatic sprinkler systems.

b. Standpipes Systems.

c. Sprinkler system piping; wet, dry and pre-action.

d. Other systems as required by the contract and code.

2. Functions to be tested:

a. Pipe water leakage.

3. Conditions of the Test:

a. As outlined in NFPA 13 and NFPA 14.

4. Acceptable Results:

a. As outlined in NFPA 13 and NFPA 14.

b. Provide completed Contractor's material and test certificate.

C. 2108-ST-03: Air Pressure Leakage Test:

1. System/Equipment to be Tested:

a. Sprinkler system piping; dry-pipe and pre-action systems,

2. Functions to be Tested:

a. Pipe air leakage.

3. Conditions of the Test:

a. As outlined in NFPA 13 and NFPA 2001.

4. Acceptable Results:

a. As outlined in NFPA 13 and NFPA 2001.

D. 2108-ST-04: Clean Agent Room Enclosure Leakage Test:

1. System/Equipment to be Tested:

a. Hazard area enclosure for clean agent fire protection zones.

2. Functions to be Tested:

a. Enclosure integrity using door pressurization fan and associated equipment.

3. Conditions of the Test:

a. Facility is substantially complete, firestopping systems complete, fire smoke dampers complete and closed, HVAC system serving the room is not operating.

b. Pressurize room using door fan and determine room leakage area.

4. Acceptable Results:

a. Equivalent leakage area as determined through testing is less than the allowable leakage area determined by the clean agent contractor as outlined in NFPA 2001.

E. 2108-ST-05: Clean Agent Piping/Manifold Leakage Test:

1. System/Equipment to be Tested:

a. Clean agent fire extinguishing system piping and manifold.

2. Functions to be Tested:

a. System integrity.

3. Conditions of the Test:

a. As required by NFPA 2001.

4. Acceptable Results:

a. Leakage test passes meeting requirements of NFPA 2001.

F. 2108-ST-06: Clean Agent Piping Flow Test:

1. System/Equipment to be Tested:

a. Clean agent fire extinguishing system piping, manifold, and nozzle.

2. Functions to be Tested:

a. Unobstructed piping.

3. Conditions of the Test:

a. Use Nitrogen or other inter gas as outlined in NFPA 2001.

4. Acceptable Results:

a. Visual indication of airflow at every nozzle meeting the requirements of NFPA 2001.

3.06 LEVEL 1 START-UP

A. 2108-SU-01: Automatic Sprinkler System Main Drain Test:

1. System/Equipment to be Tested:

a. Sprinkler system piping water supply and mains.

2. Functions to be Tested:

a. Water flow volume using the main drain. For multiple systems served by a common manifold in a riser room testing one system that is hydraulically remote is permitted.

3. Conditions of the Test:

a. Perform main drain test as outlined in NFPA 25.

b. Record the pressure indicated by the supply water gauge.

c. Fully open the main drain valve.

d. After the flow has stabilized, record the residual (flowing) pressure indicated by the water supply gauge.

e. Close the main drain valve slowly.

f. Record the time taken for the supply water pressure to return to the original static (nonflowing) pressure.

4. Acceptable Results:

a. Pressure drop during full flow is consistent with water supply information (which validates the supply main is not obstructed). Note, Per NFPA 25, investigate a drop that exceeds 10 percent of the static pressure,

b. Water discharged to sanitary sewer without flooding the room/area.

B. 2108-SU-02: Standpipe Fill-Time Testing:

1. System/Equipment to be tested:

a. Guideway standpipe system (except tunnel system with automatic valves, see 2108-IS-06).

b. Air release vacuum valves.

c. Main and auxiliary drains.

d. Expansion joints.

e. Fire hose valves.

f. FDC.

2. Functions to be tested:

a. Fill time as outlined in NFPA 130.

b. Function of air release valves.

c. Function of expansion joints.

d. System integrity: ability to withstand forces and water hammer associated with rapid fill (design flow rate).

3. Conditions of the Test:

a. Fill system at design flow rate.

b. All isolation valves must be open.

c. All fire hose valves must be closed.

d. Pressurize system to design inlet pressure for water-based fire-suppression systems.

4. Acceptable Results:

a. Fill time meets contract and code requirements (10 minutes unless amended by the AHJ).

b. Air release valve seal when system is full.

c. System supports and braces perform as intended.

d. Expansions joint do not leak, move out of alignment, or show some other form of failure.

e. As required by NFPA 130 and NFPA 14 and as stated in the water-based fire-suppression systems specifications and Issued for Construction drawings.

C. 2108-SU-03: Standpipe Flow Testing:

1. System/Equipment to be tested:

a. Guideway standpipe systems and other standpipe systems when required by the AHJ.

b. Air release vacuum valves.

c. Main and auxiliary drains.

d. Expansion joints.

e. Fire hose valves.

f. FDC.

2. Functions to be tested:

a. Pumping pressure and flow volume aligns with hydraulic calculation.

b. Inlet pressure matched FDC sign.

c. System integrity: Fire hose valves perform as intended.

3. Conditions of the Test:

a. Pump FDC to calculated inlet pressure.

b. The design number of remote fire hose valves are fully opened.

c. All isolation valves must be open.

d. Other requirements as required by the Contract Documents for water-based fire-suppression systems.

e. Water discharge is affectively managed, dechlorinated, and directed to storm drain, sanitary sewer, or other acceptable location.

4. Acceptable Results:

a. Inlet pressure aligns with hydraulic calculations and produces the calculated flow volume at remote fire hose valves.

b. Air release valve seal and remain sealed while flowing water.

c. System fully drains within 30 minutes from main and auxiliary drains.

d. Drain valves accessible without a lift.

e. System supports and braces perform as intended.

f. Expansions joint do not leak, move out of alignment, or show some other form of failure.

g. As required by NFPA 130 and NFPA 14 and as required by the Contract for water-based fire-suppression systems.

D. 2108-SU-04: Clean Agent Extinguishing Systems:

1. System/Equipment to be Tested:

a. Clean agent extinguishing systems.

2. Functions to be Tested:

a. Verify installation and perform startup of clean agent extinguishing systems in accordance with manufacturer's written installation, NFPA 2001, and startup procedures and as outlined in this specification.

b. All wiring installed and in compliance with submittals and shop drawings.

c. Panel power is dedicated with the correct circuit breaker.

d. Batteries are provided and the correct size and rating.

e. Interface wiring to dampers, doors, HVAC completed.

f. Agent storage container provided and braced.

g. Releasing valve provided but not yet attached to agent storage container.

3. Conditions of the Test:

a. Prerequisites: The following prerequisites must be successfully completed before start-up.

1) Complete level 1 static test 2108-ST-04, 2108-ST-05, and 2108-ST-06 with acceptable results.

b. Manufacturer-approved personnel must start-up clean agent extinguishing systems per manufacturer's written procedures. Record results on manufacturer's approved forms.

4. Acceptable Results:

a. Documented acceptable installation and startup in accordance with manufacturer's requirements and contract documents.

E. 2108-SU-05: Fire Pump:

1. System/Equipment to be tested:

a. Fire pump.

b. Jockey Pump.

c. Controller(s).

d. Piping, fittings, valves.

e. Pressure relief.

f. Power.

2. Functions to be tested:

a. Verify installation and perform startup of fire pump and controller in accordance with manufacturer's written installation, NFPA 20, and startup procedures and as outlined in this specification.

b. Confirm proper shaft rotation.

c. Vibration conforms to manufacturers' and NFPA 20 requirements.

d. Components on suction side of pump arranged and located in accordance with NFPA 20.

e. Verify location and drainage of the pressure relief valve.

f. Controller set to start pump start upon pressure drop.

g. Jockey pump start and stop pressure set.

h. Pump foundation and setting per NFPA 20.

i. Seismic bracing/anchors provided in accordance with design.

j. Automatic air release valve, circulating relief valve and pressure gages provided and properly located.

k. Test header provided (normally closed located in heated space).

l. Connection to driver alignment.

3. Conditions of the Test:

a. Pre-requisite: Lead in flushing and hydrostatic test.

b. Pre-requisite: Water-based fire suppression piping hydrostatic testing with acceptable results.

Pre-requisite: Pump connected to water supply.

c. Pre-requisite: Primary and standby power completed and commissioned for start-up (See 2608XX) as outlined in accordance with NFPA 20 and as required by the Contract.

4. Acceptable Results:

a. Conditions outlined above met, as required by NFPA 20, and as require in the Contract for water-based fire-suppression systems.

F. 2108-SU-06: Air Compressor

1. System/Equipment to be tested:

a. Air compressor.

b. Vibration isolation.

c. Pressure gages.

d. Air maintenance devices, check valves, piping.

e. Desiccant air driers and other specified accessories.

2. Functions to be tested:

a. Verify installation and perform startup of air compressor in accordance with manufacturer's written installation, NFPA 13, and startup procedures and as outlined in this specification.

b. Dry-pipe/preaction system air maintenance device set at pressure as outlined per NFPA 13.

c. Compressor controller start/stop pressure set.

d. Vibration isolation provided per manufacturers' instruction and they perform as intended.

3. Conditions of the Test:

a. Pre-requisite: Power and local disconnect completed and commissioned for start-up as outlined in accordance with NFPA 13, NFPA 70, and as required by the Contract.

b. Pre-requisite: Compressor provided with maintenance access as required by the manufacturer, NFPA 13, NFPA 70 and required in Issued for Construction Drawings.

4. Acceptable Results:

a. Conditions outlined above met, as required by NFPA 13, NFPA 70, and the Contract for water-based fire-suppression systems.

3.07 LEVEL 1 COMPONENT TESTS

A. 2108-C-04: Clean Agent Supervision of Circuits:

1. System/equipment to be tested:

a. Clean Agent Control Panels.

b. Clean agent extinguishing systems conductors for supervised circuits and associated initiating and notification devices, including:

1) Detection circuits.

2) Manual pull-station circuits.

3) Alarm circuits.

4) Release circuits.

5) Abort circuits.

6) Notification device circuits, including trouble lights and trouble alarms.

2. Functions to be tested:

a. Supervision of circuits and associated initiating and notification devices.

b. Confirm that a disconnected device on a circuit (Device in Alarm) does not inhibit reception of an alarm from another device on the same circuit.

c. Ground Faults.

3. Conditions of the test:

a. Disconnect each initiating device or notification appliance circuit to test for Supervision.

b. With one side of an initiating device disconnected, place another device on the same circuit in alarm.

c. Test for ground fault detection and operation by carefully grounding one side of each initiating and notification appliance circuit.

4. Acceptable Results:

a. Proper supervision of all initiating and notification circuits. An audible and visual trouble signal is received at the FACP.

b. Device in alarm on same circuit annunciates satisfactorily and initiates proper sequence at the FACP.

c. Appropriate alarm operation during ground alarm tests:

1) FACP tone device sounds.

2) FACP system Trouble LED lights.

3) FACP alphanumeric display indicates correctly.

3.08 LEVEL 1 EQUIPMENT TESTS

A. 2108-E-01: Heat Tracing Cable and Control:

1. System/equipment to be tested:

a. Self-Regulating, Parallel-Resistance Heating Cables.

b. Heater Trace Circuit Controller.

2. Functions to be tested:

a. Heat trace system installation and performance in accordance with NFPA 13 and manufacturer's instructions.

b. Power supply dedicated with breaker sized in accordance with the manufacturer and as required by the Contract.

c. Controller location meets environmental conditions of manufacturer.

d. Cable continuity test.

e. Confirm connection to fire alarm for monitoring (intra system testing to follow).

f. Response to ambient temperature below freeze protection setpoint.

g. Heating cable fault alarm.

3. Conditions of the test:

a. Subject temperature sensor to temperature approximately 3 degrees Fahrenheit above freeze protection setpoint (initial setpoint 41 degrees Fahrenheit). Monitor sensed temperature with a calibration-grade thermometer. Gradually change setpoint or sensed temperature until freeze protection circuit is energized.

b. Subject temperature sensor to temperature approximately 3 degrees Fahrenheit below freeze protection setpoint (initial setpoint 41 degrees Fahrenheit). Monitor sensed temperature with a calibration-grade

thermometer. Gradually change setpoint or sensed temperature until freeze protection circuit is de-energized.

c. Simulate an electrical fault on the heating cable.

4. Acceptance Criteria:

a. All function tests outlined above perform as intended.

b. Freeze protection circuit is energized at setpoint temperature minus 2 degrees Fahrenheit.

c. Freeze protection circuit is de-energized at setpoint temperature plus 2 degrees Fahrenheit.

d. Heater trace circuit controller initiates an alarm of cable fault.

B. 2108-E-02: Portable Fire Extinguishers:

1. System/equipment to be tested:

a. Portable fire extinguishers and accessories.

2. Functions to be tested:

a. Fire Extinguisher type and size in accordance with NFPA 10 and as required by the Contract.

b. Gage shows fully charged.

c. Installation service tag provided with installation date.

d. Located in cabinets or hung in accordance with NFPA 10 and as shown in Issued for Construction Drawings and as required by the Contract.

e. Conspicuously located and/or provided with signage.

3. Conditions of the test:

a. Units must be in place prior to substantial completion.

4. Acceptance Criteria:

a. All equipment requirement outlined above are met with acceptable results.

3.09 LEVEL 1 SYSTEM TESTS

A. 2108-S-01: Clean Agent Manual Station Response:

1. System/equipment to be tested:

a. Clean Agent Control Panels.

b. Manual Stations.

2. Functions to be tested:

a. System response to manual station actuation.

3. Conditions of the test: Perform test on complete, fully functional system, except actual discharge of extinguishing agent:

   a. Actuate manual station.

   b. Prerequisite: Level 1 IV, SU, and C clean agent system commissioning activities complete. Control panel is clear (no supervisor or trouble alarms).

4. Acceptance Criteria: For all conditions, HMI accurately reflects status of equipment and positions of devices.

   a. Immediate discharge of extinguishing agent upon actuation of manual station. Visual indication on annunciator panel, energize audible and visual alarms (fast pulse), activate EPO switch, activate contact closure to FACP for the following: shut down of air-conditioning and ventilating systems serving protected area, closure of HVAC fire/smoke dampers serving the protected area, closure of doors in protected area.

B. 2108-S-02: Clean Agent Detector Response:

1. System/equipment to be tested:

   a. Clean Agent Control Panels.

   b. Detectors.

   c. Abort Switch.

2. Functions to be tested:

   a. Sequence of control for first detector actuation.

   b. Sequence of control for second detector actuation.

   c. Abort switch delay of clean agent release.

   d. Interface to HVAC equipment and fire and smoke dampers.

   e. Keyed bypass switch.

   f. Agent container pressure switch.

3. Conditions of the test: Perform test on complete, fully functional system, except actual discharge of extinguishing agent:

   a. Prerequisite: Level 1 IV, SU, and C clean agent system commissioning activities complete. Control panel is clear (no supervisor or trouble alarms).

   b. Initiate an alarm at randomly selected detector.

   c. Initiate an alarm at a randomly selected detector in the other detection zone. Prior to termination of 30-second extinguishing agent discharge delay, press and hold abort switch for 15 seconds beyond termination of normal 30-second extinguishing agent discharge delay.

4. Acceptance Criteria: For all conditions, FACP and HMI accurately reflect status of equipment and positions of devices:

a. Actuating First Detector: Visual indication on annunciator panel, energize audible alarm and visual alarms (slow pulse), activate contact closure to FACP for the following: shut down of air-conditioning and ventilating systems serving protected area, closure of HVAC fire/smoke dampers serving the protected area, closure of doors in protected area.

b. Actuating Second Detector: Visual indication on annunciator panel, energize audible and visual alarms (fast pulse), activate EPO switch, start time delay for extinguishing-agent discharge for 30 seconds, and discharge extinguishing agent. Release of abort switch causes agent discharge. Extinguishing agent discharge operates audible alarms and strobe lights inside and outside the protected area.

c. HVAC equipment fans are turned off and control dampers are positioned as required to contain the clean agent system within the room enclosure with priority of controls over all other fan and damper control signals except the electrical disconnect switch. The fail position of the HVAC control dampers and fire and smoke dampers is such that it maintains containment of the enclosure.

d. Keyed bypass switch results in supervisory alarm and prevents activation of releasing valve.

e. Agent container low pressure switch.

C. 2108-S-03: Low Agent Pressure Switch:

1. System/equipment to be tested:

a. Low Agent Pressure Switch.

2. Functions to be tested:

a. Calibration.

b. Actuation.

3. Conditions of the test:

a. Prerequisite: Level 1 IV, SU, and C clean agent system commissioning activities complete. Control panel is clear (no supervisor or trouble alarms).

b. Apply test pressure to low agent pressure switch sensing port. Initial pressure: Greater than switch pressure set point. Gradually decrease pressure until switch changes state, indicating low pressure condition.

4. Acceptance Criteria: For all conditions, HMI accurately reflects status of equipment and positions of devices:

a. Switch changes state at set point plus/minus 5 percent. Initiates trouble alarm when pressure is less than pressure set point.

D. 2108-S-04 [Fire Pump Testing]:

1. [System/equipment to be tested:]

a. [Fire Pump].

b. [Jockey Pump].

c. [Controller].

d. [Test header].

e. [Water service].

2. [Functions to be tested:]

a. [Perform a full acceptance test in accordance with NFPA 20 including a full flow test using the test header, fire hoses and hose monster.]

3. [Conditions of the test:]

a. [Pump must be completed and connected to pump water supply.]

b. [Water must be discharge to the storm sewer with damaging landscaping or presenting a hazard.]

c. [Discharge water must be de-chlorinated.]

4. [Acceptable Results:]

a. [Fire pump performs as design and in accordance with NFPA 20.]

b. [Pump produces flow and pressure that meets or exceed nameplate and meets system demand.]

c. [Complete NFPA 20 Contractor's Material and Test Certificate for fire pump systems and a National Fire Sprinkler Association Fire Pump Test form, or equal as acceptable to the Specification owner.]

E. 2108-S-05 Dry-pipe system water delivery time:

1. System/equipment to be tested:

a. Dry-pipe systems.

2. Functions to be tested:

a. Trip test and water delivery time in accordance with NFPA 13.

3. Conditions of the test:

a. Prerequisites: All IV, ST, SU, C and E tests completed for dry-pipe systems and air compressors.

4. Acceptable Results:

a. Water delivery time meets the requirements of NFPA 13.

F. 2108-S-06 Air Compressor system refill of dry-pipe system:

1. System/equipment to be tested:

a. Air Compressor.

b. Dry-pipe systems.

2. Functions to be tested:

a. Compressor fill time for the largest dry-pipe system it serves.

3. [Conditions of the test:]

a. Prerequisites: All IV, ST, SU, C and E tests completed for dry-pipe systems and air compressors.

4. [Acceptable Results:]

a. Verify compressor refills the largest dry-pipe system it serves within the time allowed in NFPA 13.

3.10 LEVEL 2 INTRASYSTEM TESTS

A. 2108-IS-01 Clean agent system smoke damper control:

1. System/equipment to be tested:

a. Smoke damper and fire smoke damper.

b. Power relays.

2. Functions to be tested:

a. Damper fully open when CAS is normal.

b. Damper closely completely when CAS is in alarm in accordance with clean agent system sequence of operation.

c. Damper closes completely when damper AC power to damper is switched off at dedicated circuit breaker.

1) Confirm BMS damper position reflect damper position monitored via damper end switches. (See Section 23 08 00 – Commissioning of HVAC Systems).

3. Conditions of the test:

a. Prerequisite: Damper Level 1 system activities complete.

b. Prerequisite: Damper position may be verified directly via HVAC grille or access panel. (Visibility of actuator alone is not acceptable).

4. Acceptance Criteria:

a. All functions perform as intended and as require by the applicable codes and standards and as requires in this specification and the Contract.

B. 2108-IS-02 Clean agent system HVAC interface via BMS:

1. System/equipment to be tested:

a. HVAC system shutdown via BMS.

2. Functions to be tested:

a. BMS to shut down in accordance with clean agent sequence of operation.

b. HVAC system to automatically restart upon clean agent system reset.

c. Timing of HVAC shutdown and closing of fire/smoke and smoke dampers.

3. Conditions of the test:

a. Prerequisite: Damper and HVAC Level 1 system activities complete.

b. Prerequisite: BMS normal local fan control set to auto. (See Section 25 08 XX).

4. Acceptance Criteria:

a. All functions perform as intended and as require by the applicable codes and standards and as required by the Contract.

C. 2108-IS-03 Clean agent communication with FAS:

1. System/equipment to be tested:

a. Clean agent fire alarm conditions transmission to FAS.

b. Clean agent supervisory conditions transmission to FAS.

c. Clean agent trouble alarm conditions transmission to FAS.

2. Functions to be tested:

a. First smoke detector results in pre-alarm condition or as outlined in the FAS and CAS sequence of operation.

b. Second smoke detector results in an alarm condition or as outlined in the FAS and CAS sequence of operation.

c. CAS manual pull station result in an alarm condition or as outlined in the FAS and CAS sequence of operation.

d. CAS supervisory condition transmits as a general supervisory alarm at the FAS. Test at least the following two conditions:

1) Agent maintenance bypass switch activated).

2) Detection circuit disconnected.

e. CAS trouble condition transmits as a general trouble alarm at the FAS. Test at least the following two conditions:

1) Simulate battery fault.

2) Simulate clean agent container low pressure.

3. Conditions of the test:

a. Prerequisite: FAS Level 1 commissioning activities complete.

4. Acceptance Criteria:

a. All functions perform as intended and as require by the applicable codes and standards and as required by the Contract.

D. 2108-IS-04 Automatic sprinkler system waterflow/tamper switch interface with FAS

1. System/equipment to be tested:

a. Waterflow switches (pressure and vane type).

b. Valve tamper switches.

2. Functions to be tested:

a. Water flow switches report as an alarm condition within 15 to 30 seconds. A delay of 15 seconds (to prevent false alarm from water surges) must be established by the contractor by adjusting the waterflow device.

b. Valve tamper switches register as closed when the valve is close by not more than 25 percent.

3. Conditions of the test:

a. Prerequisite: FAS and automatic sprinkler system Level 1 commissioning activities complete.

4. Acceptance Criteria:

a. All functions perform as intended and as require by the applicable codes and standards and as required by the Contract.

E. 2108-IS-05 Fire pump interface with FAS:

1. System/equipment to be tested:

a. Fire pump controller monitoring by FAS.

2. Functions to be tested:

a. Controller - Connected to alternate power source supervisory alarm.

b. Controller - Auto/off/manual supervisory alarm.

c. Controller - Trouble alarm.

d. Controller - Fire pump running.

3. Conditions of the test:

a. Prerequisite: FAS Level 1 and Fire Pump Level 1 Commissioning activities complete.

4. Acceptance Criteria:

a. All functions perform as intended and as require by the applicable codes and standards and as required by the Contract.

F. 2108-IS-06 Control of tunnel deluge valves via FAS:

1. System/equipment to be tested:

a. Tunnel standpipe automatic (deluge) valves.

2. Functions to be tested:

a. Tunnel standpipe opens and fills standpipe in accordance with the emergency response matrix.

3. Conditions of the test:

   a. Prerequisite: FAS Level 1 and EVS Level 1 Commissioning activities complete.

   b. Simulate EVS input to FACP for a tunnel mode launch.

   c. Control valves must be fully open for this test.

   d. Fire hose valves must be closed.

   e. This test replaces the fill time test (2108-SU-02) for tunnel semi-automatic standpipe systems.

4. Acceptance Criteria:

   a. Air release valves performed as intended.

   b. Fill time is less than 10 minutes or other criteria approve by the AHJ.

   c. System may be fully drained at accessible main and low-point drains.

   d. Standpipe bracing and expansion joints performed as designed.

   e. All functions perform as intended and as require by the applicable codes and standards and as required by the Contract.

3.11 LEVEL 1 AND 2 TEST REQUIREMENTS MATRIX

	Level 1						**Level 2**
Commissioning Activity	**2108-IV-0X**	**2108-ST-0X**	**2108-SU-0X**	**2108-C-0X**	**2108-E-0X**	**2108-S-0X**	**2108-IS-0X**
Heat tracing for fire suppression	X						
Fire suppression system insulation	X						
Water-based fire suppression	X						
Clean agent systems	X						
Fire Pump	X						
Fire extinguisher cabinets/hangers	X						
Flushing of piping		X					
Hydrostatic test		X					
Air pressure leakage test		X					
Clean agent room enclosing leakage test		X					
Clean agent piping/manifold leakage test		X					
Clean agent piping flow test		X					
Automatic sprinkler system main drain test			X				
Standpipe fill time testing			X				
Standpipe flow testing			X				

Clean agent extinguishing systems			X				
Fire pump			X				
Air compressor			X				
Clean agent supervision of circuits				X			
Heat trace cable and control					X		
Portable fire extinguishers					X		
Clean agent manual station response						X	
Clean agent detector response						X	
Clean agent low agent pressure switch						X	
Fire pump						X	
Dry-pipe system water delivery time						X	
Air compressor system refill of dry-pipe system.						X	
Clean agent system smoke and fire/smoke dampers							X
Clean agent system HVAC interface with BMS							X
Clean agent communication with FAS							X
Automatic sprinkler system waterflow/tamper switch interface with FAS							X
Fire pump interface with FAS							X
Control of tunnel deluge valves via FAS							X

END OF SECTION

EXHIBITS (On Proceeding Pages)

1. Exhibit A - Example of an IV Commissioning Activity for Water-Based Fire Protection Systems

EXHIBIT A

NOTE: The following is an example of an IV commissioning activity for water-based fire protection systems.

2100-IV-## Water-based fire protection systems

Facility Location: ST N65 – Edmonds Transit Center

OBJECTIVES:

Verify that the water-based fire protection systems are installed using components based upon approved submittals and that the installation conforms with the approved shop drawings.

INSTRUCTION: A single form may be used for multiple systems, but different forms must be used for verification performed at various stages of the project.

EQUIPMENT TO BE TESTED:

Equipment ID (System)	Description
###	Dry-pipe system ###
###	Dry-pipe system ###
###	Wet-pipe System ###
###	Standpipe System ###

REFERENCE DOCUMENTS:

Document
IFC Drawings:
Specification Sections: 21 11 00
Submittals (Shop Drawings and material submittals): Enter approved record number

TEST PRE-REQUISITES:

Activity	Notes	Completed?	
		Yes	No
None		☐	☐
		☐	☐

Notes:
(1)

MINIMUM PARTICIPANTS:

Participant	Notes	Required?	
		Yes	No
Installing contractor		☐	☐
Quality control inspector		☐	☐

Notes:
(1)

REQUIRED INSTRUMENTATION AND EQUIPMENT:

Instrument or Equipment						Notes	Provided Instrumentation meets Requirements?	
Type or Sensed Parameter	Manufacturer	Model	Range	Accuracy	Calibration Date/ Next Cal. Due		Yes	No
				±	/		☐	☐
				±	/		☐	☐

Notes:
(1)

CONDITIONS AT TIME OF TESTING:

Describe the status of the job site and system being evaluated.

AREA OF WORK:

Area in Which Work will be Conducted:

Describe the extent of the system if further clarification is necessary.

Notes:
(1)

ISSUES DISCOVERED, PROPOSED RESOLUTIONS, AND CORRECTION TRACKING:

No.	Issue	Proposed Resolution	Date Resolved by Contractor	Date Verified by QC Inspector	QC Inspector Initials

Notes:
(1)

2100-IV-## WATER-BASED FIRE PROTECTION SYSTEM COMPONENT VERIFICATION

The following checklist items refer to the columns in the table below:

a. The make and model of the materials and/or equipment matches the accepted submittals?
b. The installed materials and/or equipment does not have visible damage, including finishes?
c. Materials are clean, and free of debris?
d. Components located as indicated in approved shop drawings?
e. Accessible for maintenance and the manufacturer's recommended and required maintenance clearances are provided?
f. Installation is in accordance with approved shop drawings including pipe layout, support, seismic, and manufacturer's requirements and contract requirements?

For each item complete columns a-f by entering yes (Y), no (N) or not applicable (NA). Where an "N" is recorded add a note and enter the item in a tracking log for follow up and correction.

Equipment	a	b	c	d	e	f	Notes	Date checked
Steel pipe – schedule 40 galvanized								
Steel pipe – schedule 40 black								
Steel pipe – schedule 10 black								
Stainless steel pipe								
Ductile pipe Class ##								
Mechanical couplings – rigid								
Mechanical couplings – flexible								
Hole cut-out couplings								
Flange couplings including fasteners and gasket material								
Threaded fittings								
Mechanical fittings (tees, elbows, reducers, etc.)								
Main drain valve								
Alarm test valve								
Drop nipple fittings								
Gate valves								
Backflow preventer								
Forward flow test outlets								
Riser manifold stands								
Ball valves								

Butterfly control valves								
Isolation valves								
Post indicator valve and tamper switch								
Check valves								
Dry-pipe valves								
Wet-pipe riser assembly								
Deluge valves								
Compressors								
Air maintenance devices								
Pressure switches								
Tamper switches								
Vane-type flow switches								
Automatic drain valves								
Automatic air/vacuum valves								
Drain valves								
Drum drips								
Air Vent valves								
Pressure relief valves								
Seismic expansion joints								
Sprinkler heads standard								
Sprinkler heads dry-type								
Gages								
Escutcheons								
Sprinkler guards								
Sprinkler cabinet								
Fire hose valves								
Fire hose valve cabinets								
Signs								
Labels								
Fire department connections								
Anchors								

Supports								
Bracing								
Other – [Update based upon materials submittals]								

Manufacturer installation instruction are attached for the following Equipment:

[Contractor: List and attached instruction for equipment as appropriate.]

QUALITY CONTROL INSPECTOR VERIFICATION

I have reviewed the section above and validated through field inspection that the information in the table above is complete and accurate.

_____	_____	_____
Printed name	Initials	Date

Notes:
(1)

END OF EXHIBITS

SECTION 21 11 00

WATER-BASED FIRE SUPPRESSION SYSTEMS

NOTE TO DESIGNER:

SECTIONS WITH BRACKETS. E.G., [TEXT] ARE TO BE MODIFIED OR DELETED IF NOT APPLICABLE. ITALICIZED TEXT PROVIDES INSTRUCTION TO THE DESIGNER TO INCLUDE LANGUAGE ON SPECIFIC TOPICS WHEN APPLICABLE. THE INSTRUCTIONS ARE TO BE DELETED WHEN THE SPECIFICATION IS FINALIZED. LANGUAGE NOT IN BRACKETS MUST BE USED 'AS IS' WITHOUT MODIFICATION OR WITH AN APPROVED SPECIFICATION MODIFICATION REQUEST.

DESIGNER TO DELETE TEXT ABOVE FOR FINAL SECTION

PART 1 - GENERAL

1.01 SUMMARY

A. Section includes:

1. Requirements to Provide all material, labor, equipment, design, and services necessary to perform the complete installation of the fire protection systems as indicated on the Drawings and described in the Specification.

2. This Section includes the following fire-suppression systems.

a. [Manual dry, Class 1 standpipe system for stations and buildings]

b. [Manual and Semi-Automatic dry, Class 1 standpipe system for the guideway]

c. [Wet-pipe sprinkler systems]

d. [Dry pipe sprinkler systems and pre-action sprinkler systems]

3. Engineering requirements for hydraulic calculations, supports, braces (seismic and thrust forces), fill time, water hammer, and as otherwise outlined in this specification.

a. In case of conflicts the more stringent of this specification or the requirements of the IFC, NFPA 13, NFPA 14 and NFPA 130 (with AHJ Amendments) will govern.

b. See Section 21 05 00 - Common Work Results for Fire Suppression for related requirements.

1.02 REFERENCES

A. This Section incorporates by reference the adopted version of the following documents at the time of project permit. If not formally adopted through a code or other rule the most recent version applies:

1. American National Standards Institute (ANSI):

    a. ANSI B16.3 Malleable Iron Threaded Fittings.

    b. ANSI B16.5 Pipe Flanges and Flanged Fittings.

2. American Society of Civil Engineers / Structural Engineering Institute (ASCE/SEI):

    a. ASCE/SEI 7-10 Minimum Design Loads of Buildings and Other Structures.

3. American Society of Mechanical Engineers International (ASME):

    a. ASME B16.1 Gray Iron Pipe Flanges and Flanged Fittings Classes 25, 125, and 250.

    b. ASME B16.4 Gray Iron Threaded Fittings Classes 125 and 250.

    c. ASME B16.9 Factory-Made Wrought Buttwelding Fittings.

    d. ASME B31.9 Building Services Piping.

    e. ASME B36.10M Welded and Seamless Wrought Steel Pipe.

    f. ASME Boiler and Pressure Vessel Code (BPVC), Section IX, Welding and Brazing Qualifications.

4. ASTM International (ASTM):

    a. ASTM A53/A53M Standard Specification for Pipe, Steel, Black and Hot-Dipped, Zinc-Coated, Welded and Seamless.

    b. ASTM A123/A123M Standard Specification for Zinc (Hot-Dip Galvanized) Coatings on Iron and Steel Products.

    c. ASTM A135/A135M Standard Specification for Electric-Resistance-Welded Steel Pipe.

    d. ASTM A193 Allow-Steel and Stainless-Steel Bolting Material for High Temperature or High-Pressure Service and Other Special Purpose Applications.

    e. ASTM A234/A234M Standard Specification for Piping Fittings of Wrought Carbon Steel and Alloy Steel for Moderate and High Temperature Service.

    f. ASTM A276 Stainless Steel Bars and Shapes.

    g. ASTM A307 Standard Specification for Carbon Steel Bolts, Studs, and Threaded Rod 60000 psi Tensile Strength.

    h. ASTM A312 Seamless and Welded Austenitic Stainless-Steel Pipe.

    i. ASTM A351 Castings, Austenitic, Austenitic-Ferritic (Duplex), for Pressure Containing Parts.

    j. ASTM A536 Standard Specification for Ductile Iron Castings.

    k. ASTM A780/A780M Standard Practice for Repair of Damaged and Uncoated Areas of Hot-Dip Galvanized Coatings.

    l. ASTM A795/A795M Standard Specification for Black and Hot-Dipped Zinc-Coated (Galvanized) Welded and Seamless Steel Pipe for Fire Protection Use.

m. ASTM B16/B16M Standard Specification for Free-Cutting Brass Rod, Bar and Shapes for Use in Screw Machines.

n. ASTM B733 Standard Specification for Autocatalytic (Electroless) Nickel-Phosphorus Coatings on Metal.

o. ASTM D2000 Standard Classification System for Rubber Products in Automotive Applications.

p. ASTM E94 Standard Guide for Radiographic Examination.

q. ASTM E814 Standard Test Method for Fire Tests of Penetration Firestop Systems.

r. ASTM E1032 Standard Test Method for Radiographic Examination of Weldments.

5. American Welding Society (AWS):

a. AWS D1.1/D1.1M Structural Welding Code – Steel.

6. Authorities Having Jurisdiction (AHJ):

a. AHJ Fire Code (International Fire Code with AHJ Amendments).

7. Factory Mutual Global (FM):

a. FM Approval Guide.

8. Institute of Electrical and Electronics Engineers (IEEE):

a. IEEE 515 The Testing, Design, Installation, and Maintenance of Electrical Resistance Trace Heating for Industrial Applications.

9. Manufacturers Standardization Society for the Valve and Fittings Industry.

a. MSS SP 58 Pipe Hangers and Supports – Materials, Design and Manufacture, Selection, Application, and Installation.

10. National Fire Protection Association (NFPA):

a. NFPA 13 Standard for the Installation of Sprinkler Systems.

b. NFPA 14 Standard for the Installation of Standpipe and Hose Systems.

c. NFPA 20 Standard for the Installation of Stationary Pumps for Fire Protection.

d. NFPA 24 Standard for the Installation of Private Fire Service Mains and Their Appurtenances.

e. NFPA 25 Standard for the Inspection Testing, and Maintenance of Water Based Fire Protection Systems.

f. NFPA 130 Standard for Fixed Guideway Transit and Passenger Rail (with AHJ Amendments).

g. NFPA 1963 Standard for Fire Hose Connections.

11. Underwriters Laboratories (UL):

a. UL Fire Protection Equipment Directory.

b. UL 193 UL Standard for Safety for Alarm Valves for Fire-Protection Service.

c. UL 199 Automatic Sprinklers for Fire-Protection Service.

d. UL 213 Rubber Gasketed Fittings for Fire-Protection Service.

e. UL 260 Dry Pipe and Deluge Valves for Fire-Protection Service.

f. UL 262 Gate Valves for Fire-Protection Service.

g. UL 312 Check Valves for Fire-Protection Service.

h. UL 346 Waterflow Indicators for Fire Protective Signaling Systems.

i. UL 393 Indicating Pressure Gauges for Fire-Protection Service.

j. UL 405 Fire Department Connection Devices.

k. UL 464 Audible Signaling Devices for Fire Alarm and Signaling Systems.

l. UL 515 Standard for Safety Electrical Resistance Trace Heating for Commercial Application.

m. UL 515A Certified Trace Heating Equipment for Fire Sprinkler Pipes.

n. UL 688 Hose Valve for Fire-Protection Service.

o. UL 753 Alarm Accessories for Automatic Water-Supply Control Valves for Fire Protection Service.

p. UL 1091 Butterfly Valves for Fire-Protection Service.

q. UL 1450 Standard for Safety Motor-Operated Air Compressors, Vacuum Pumps, and Painting Equipment.

r. UL 1474 UL Standard for Safety Adjustable Drop Nipples for Sprinkler Systems.

s. UL 1726 Automatic Drain Valves for Standpipe Systems.

t. UL 1767 Early-Suppression Fast-Response Sprinklers.

u. UL 2573 Outline of Investigation for Automatic Air Release, Air/Vacuum and Combination Air Valves for Fire Protection Service.

12. Washington Administrative Code (WAC):

a. WAC 212-80 Fire Sprinkler System Contractors.

b. WAC 246-290 Cross-connection Control

13. Washington Association of Building Officials (WABO):

a. WABO Welder and Welding Operator Performance Qualification Standard (No. 27-13).

1.03 COORDINATION

A. Comply with project coordination requirements and common work results for fire suppression requirements as required by the Contract.

B. Contractor must coordinate shop drawings with other trades to avoid clashes and verify adequate space for installation of components.

C. All equipment must be installed so it can be accessed for maintenance without requiring the removal of building structure of other trades work to access. Provide access panels where necessary.

1.04 SUBMITTALS

A. Shop drawing, support submittals, and product data must be approved by the Resident Engineer before submission to the AHJ for their approval.

B. Submit the following:

1. Hydraulic Calculations: Provide hydraulic calculations for review prior to fabrication of the systems, signed and sealed by a State of Washington licensed Fire Protection Engineer or a fire sprinkler designer with a current Washington State Certificate of Competency Level III in accordance with WAC 212-80:

a. Complete hydraulic calculations from an approved computer calculation program. Calculation sheets must include the software license name and the UL listing number for verification. Calculations must include water delivery time requirements for dry-pipe sprinkler systems larger than 750 gallons and fill time for guideway standpipe systems.

b. Hydraulic calculations must include information from Hydrant flow test data acceptable to the AHJ Fire Department.

c. Arrange with AHJ Utilities Department for hydrant flow test to be witnessed by Sound Transit and the AHJ Fire Department and submit complete Fire Hydrant flow test report.

d. Contractor must document Fire Department boost requirements to operate standpipe and sprinkler systems.

2. Shop Drawings, and all Manufacturers' product data including pipe, joints, fittings, valves, couplings, fire department connections, piping anchorage and supports, maintenance data, recommended spare parts, labels, tags and signage. Show complete system in shop drawings, including construction phasing:

a. Drawings must show plan view and vertical view including risers, drops to fire department connections and drain piping. Show line layout of each standard joint, special joint, fitting, hanger, and support.

b. Include design calculations for pipe supports and braces and indicate size and characteristics of component and fabrication details.

c. Shop drawings for automatic sprinkler systems and standpipe systems must be no less than 1/8-inch equals one foot scale, prepared in accordance with NFPA 13 showing all sprinkler systems in plan view and including all accessories such as alarm valves, flow switches, drain valves and test connections.

d. Shop drawings for the guideway standpipe systems must be no less than 1-inch equals twenty-foot scale, prepared in accordance with NFPA 13 showing all standpipe systems in plan view, with section views where necessary to show detail, and including all accessories such as fire department connections, fire hose valves, air vents, drain valves and supports. Include dimensions for the train clearance envelope along the entire guideway.

e. Provide fire pump factory shop test and hydrostatic test.

3. Fire-Suppression Systems Support Submittal:

a. Design Calculations: Calculate all forces including and not limited to seismic, wind, train pressures, dead loads, live loads, thermal loads, water hammer, thrust loads acting on the standpipe systems and/or the sprinkler systems.

b. Design Analysis: The pipe supports are not detailed fully on the Issued for Construction Drawings. Provide a support system that will accommodate all loads and movement including seismic movement, structural expansion joints, wind, train pressures, dead loads, live loads, thermal movement, water hammer, and thrust loads. Submit detailed seismic bracing calculations based on NFPA 13 and/or ASCE 7-10. For guideway standpipes systems and other systems/portions of system as required by the Contract, calculations based upon ASCE 7-10 are required. Design sway bracing, fasteners, assemblies, pipe hangers, and equipment supports, using performance requirements and design criteria acceptable to AHJ Fire Department. Pipe supports and bracing must be designed and detailed so the pipe can be installed and replaced without impacting the emergency guardrail or acoustic panels.

c. Support Details: Indicate fabrication and arrangement in accordance with NFPA 13. Detail attachments and to the structure. Show attachment locations, methods, and spacing. Identify components, list their strengths, and indicate directions and values of the prevailing forces transmitted to the structure during seismic events. Support and seismic calculations are required for all systems. For guideway standpipe systems, and other standpipe systems as required by the Contract, the calculation must include thrust and water hammer forces and application of ASCE 7-10:

1) Pre-approval and Evaluation Documentation: For seismic restraints and support devices selected. Documentation must be prepared by an agency acceptable to AHJ, showing maximum ratings of restraint items and the basis for approval (tests or calculations).

4. Signage Submittal: A submittal for signage may be included in the show drawings and product submittal or a separate submittal specific to signage may be provided.

5. [Guideway only: Standpipe Valve Schedule: Provide a valve schedule of fire hose valves, isolation valves, and drain valve in table format using MS Word, 8.5 x 11 inches portrait orientation with title, headers, rows, and columns to serve as a fire department reference in the FCC/FCR. Tabulate valve type, valve identification number, marker direction, distance from designated rail start point in miles, and, for fire hose valves, notes to indicate associated FDCs. See Appendix A – Valve List Sample form).]

C. Transmit the submittals listed above and the following:

1. All product data, shop drawings, and calculations required by this section must be in accordance with the International Fire Code, NFPA 13, [and NFPA 130] as amended by the State of Washington, and the AHJ. Labelling and signage of Fire Department Connections (FDC), tags and numbering of Fire Hose Valves (FHVs) and other associated parts of the system.

2. Product Data: For each type of equipment/product, pipe, valve, pipe hanger, anchorage device and support system component.

3. Certified Test Reports: Provide certified test reports on the Contractor's Material and Test Certificate for Aboveground Piping as shown in NFPA 13.

4. Operation and Maintenance Manuals: Guidelines for operation and maintenance data are required by the Contracts. In addition to these requirements include manufacturer's installation and maintenance data for all fire suppression equipment/products furnished under this specification.

5. Welding Certificates.

6. Welding report interpreting weld radiographs to the Resident Engineer.

1.05 QUALITY ASSURANCE

A. Steel Pipe Welding: Qualify processes and operators according to ASME Boiler and Pressure Vessel Code (BPVC): Section IX, "Welding and Brazing Qualifications":

1. Comply with welding provisions in NFPA-13 & NFPA-14.

2. Certified WABO welders. Certify that each welder has passed AWS qualification tests for welding processes involved and that certification is current.

B. Support, Bracing, and Structure Welding:

1. Comply with the requirements of AWS D1.1/D1.1M, as applicable.

C. Employ welders and/or welding operators and welding procedures qualified in accordance with the requirements of Section IX of the ASME Boiler and Pressure Vessel Code.

D. Provide working plans for and final calculations based upon the engineers' design, by a fire sprinkler designer with a current Washington State Certificate of Competency Level III (engineering technician) in accordance with WAC 212-80.

E. [Seismic Design Engineering Responsibility: For guideway standpipe system the contractor must employ or contract with a structural engineer registered in the State of Washington to perform calculation for supports, braces, and other means to address structural expansion joints, thermal expansion, seismic forces, thrust forces.]

Designer: The requirement for the contractor to hire a structural engineer depends upon how much detail is provided by the EOR and the need for latitude with contractor means and methods for the guideway standpipe. ST experience is that most contractors are not well suited to bring on an outside SE to provide support for this work. ST believes the best practice is for the EOR to take the design much further so that an engineering technician may complete the design without performing complex engineer on thermal expansion, seismic forces, thrust forces, and expansion joint design. The FP EOR must determine how to mitigate water hammer.

F. Provide automatic air/vacuum valve size and location analysis and calculations for valve sizing for dry standpipe systems serving guideway.

G. Verify materials are clearly marked with the manufacturer's name, nameplate data or stamp, rating, and ASTM conformance number, as applicable:

1. Use only fire protection system components and equipment that is Underwriters Laboratories (UL) Listed or labeled and Factory Mutual (FM) approved for use in fire protection systems, unless otherwise required by the AHJ. All piping materials must conform to the requirements of NFPA 13 and NFPA 14.

H. Verify that materials used are:

1. Inspected prior to preparation and installation for conformity to pipe tolerances (ex. Stainless outside and inside diameters, wall thickness, ovality, pipe end flare, end square cut, etc.).

2. Inspected post fabrication for installation for conformity to pipe and grooving tolerances (ex. Gasket seating area, groove/cut width, groove/cut base radius, groove/cut depth, pipe end flare, groove/cut radius, where required, etc.).

3. Installations which exceed the tolerances associated with pipe end characteristics or roll/cut groove tolerance is not permitted to be used within the fire protection system.

I. All pipe fitters must have manufacturer training or demonstrated experience in proper use of grooving tools, application of groove, and installation of grooved piping products.

1.06 DELIVERY, STORAGE, AND HANDLING

A. Deliver materials and equipment in original, sealed containers or packages in an undamaged condition complete with labels and instructions for handling, storing, unpacking, protection and installing.

1.07 PROJECT CONDITIONS

A. The contractor must review the Issued for Construction Drawings to determine if a space/area is conditioned and exposed to direct or wind-blown precipitation so that the appropriate equipment may be provided.

1.08 WARRANTY

A. The Contractor must obtain and submit the manufacturer's warrantees which provide that all fire alarm system components furnished under this Contract must be warranted against defect in design, material and workmanship for the full warranty time which is standard with the manufacturer and/or supplier but not less than two (2) years after system acceptance.

Designer: confirm the two-year warranty aligns with other contract language and that the start date is clear.

PART 2 - PRODUCTS

2.01 LEEDS COMPLIANCE – NOT USED

2.02 PERFORMANCE/DESIGN REQUIREMENTS

A. The water-based fire suppressions systems are a delegated design. The design must conform to the drawings and other requirements outlined in this specification and as required by the Contract.

B. See NFPA 13 and NFPA 14 for system definitions including, but not limited to wet-pipe sprinkler system, dry-pipe sprinkler system, preaction sprinkler system, manual dry standpipe, manual wet standpipe, and semiautomatic dry standpipe.

C. For semiautomatic dry standpipes serving the guideway the NFPA 14 definition is modified. The automatic valve is provided to reduce fill time. The system relies exclusively on the fire department connection to supply the system demand.

D. [The guideway standpipe system must be designed to provide the following:]

a. [Manual or semiautomatic as indicated in the drawings.]

b. [To be fed from two locations, unless waive by the AHJ for short segments (< 800 feet) and provided with isolation valves installed at not more than 800 feet (244 m) apart.]

c. [To have a water delivery time of 10 minutes or less based upon a fill rate of 1,000 gpm or as required by the AHJ.]

d. [To have combination air relief vacuum valves installed at each high point and as required by NFPA 130 and as shown in the Issued for Construction Drawings on the standpipe for effective filling and to mitigate water hammer.]

e. [Cross connected every 2400 feet in tunnels via cross passages and as indicated on the drawings.]

f. [Unless amended by the AHJ, the standpipe is to have a minimum flow of 750 gpm (250 gpm at each of the three remote fire hose valves). See drawings for design pressure and volume criteria which may vary by jurisdiction.]

g. [Unless otherwise indicated, the following is maximum acceptable residual pressure at nominal flow through each Hose-Connection Outlet: 175 pounds per square inch gauge. When the standpipe is fed from two locations it must be designed to be filled from a single FDC and serve the hydraulically most distant hose valves.]

Designer: Delete the section above if there is no guideway standpipe.

E. Non-guideway standpipe system design must provide for the following:

1. Minimum Residual Pressure at each Hose-Connection Outlet: [100] pounds per square inch gauge.

2. Unless otherwise indicated, the following is maximum acceptable Residual Pressure at nominal flow through each Hose-Connection Outlet: 175 pounds per square inch gauge.

3. The standpipe is to have a minimum flow in accordance with NFPA 14 and not less than 500 gpm for standpipes not serving the guideway, or as otherwise required by the AHJ.

F. Fire-suppression sprinkler system design must provide for the following:

1. Owner margin of safety for available pressure at design water flow conditions: A ten (10) pounds per square inch, or ten (10) percent, whichever is less when allowed by the AHJ, reserve cushion between the available water supply pressure and hydraulically calculated pressure at system design demand is required.

2. Sprinkler Occupancy Hazard Classifications: Indicated on the Issued for Construction Drawings and in accordance with NFPA 13. Any areas not specifically identified on the Issued for Construction Drawings must comply with the following unless the AHJ requires a higher level of protection:

a. Building Service Areas: Ordinary Hazard, Group 1.

b. General Storage Areas: Ordinary Hazard, Group 1.

c. Mechanical Equipment Rooms: Ordinary Hazard, Group 1.

d. Platform Areas: Light Hazard.

e. Concourses and Other Public Areas: Light Hazard.

f. Parking Garage Areas: Ordinary Hazard Group 2.

g. Over the trainway in enclosed station when required: Per AHJ requirement.

3. Minimum Density for Automatic-Sprinkler Piping Design: As Indicated in NFPA 13 and on the Issued for Construction Drawings.

4. Maximum Protection Area per Sprinkler:

a. According to NFPA 13, unless otherwise indicated.

5. Total Combined Hose-Stream Demand Requirement: According to NFPA 13, unless otherwise indicated:

G. Seismic Performance: Fire-suppression piping and support system must be capable of withstanding the effects of earthquake motions determined according to NFPA 13.

H. [Thermal expansion: Guideways standpipe systems must be capable of expansion and contraction of piping without restraint (putting pipe, couplings and fitting into tension or compression) unless specifically designed for restraint by the registered structural engineer.]

2.03 SYSTEMS/EQUIPMENT

A. Specific manufacturers and model numbers, where noted, are to indicate a standard of design and are not intended to be restrictive.

B. All materials necessary to make the installation complete in every detail must be furnished and installed whether specifically shown on Issued for Construction Drawings or specified in this specification.

C. Provide pipe, tube and fittings of the type, fitting requirements, grade, class, size, and weight indicated or required for each service.

1. Where type, grade, or class is not indicated, provide proper selection as determined by installer for installation requirements, and comply with governing regulations and industry standards.

D. All materials and equipment in the system must be new and current products of the manufacturer's latest design and suitable to perform the functions intended, as listed under manufacturers.

1. Where two or more pieces of equipment are required to perform interrelated functions, they must be products of one manufacturer.

E. All devices, components and equipment having a similar or identical appearance or function must be the products of the same manufacturer.

F. All components and equipment within the UL testing laboratory service's scope must be listed by the Underwriters' laboratories for the purpose for which they are used. If no products are available FM approval may be used if acceptable to the AHJ.

G. Product marking. Each major component must be furnished with legible markings indicating; name of the manufacturer, part numbers and serial numbers, and markings as required per ASTM standards.

H. All piping, couplings, supports, hangers, and hardware where exposed to direct or wind-blown precipitation, installed in a corrosive atmosphere, or installed in direct contact with

surfaces expected to be wet, must be protected against corrosion and be stainless steel and/or hot-dipped galvanized.

I. Supports, anchors, braces, and associated hardware in unconditioned space must be electrogalvanized or zinc electroplated.

2.04 ACCEPTABLE MANUFACTURERS

A. If acceptable manufacturers are not listed in this Section, refer to the Articles describing each specific product type.

B. All products will be required to meet project specifications and be UL listed or FM approved.

C. The following pipe fitting manufacturers will be acceptable. Fittings must be rated for at least a 175 pounds per square inch gauge working pressure, except when higher pressure ratings are specified for the different piping components under their individual descriptions:

1. Threaded piping fittings, Class 150, ANSI B16.3 threaded malleable iron Class 125, ASME B16.4 cast iron, or Class 150 ductile iron:

a. Anvil.

b. Star Products, Inc.

c. Ward.

2. Welding fittings ASME B16.9 made of ASTM A234/A234M Grade WPA or WPB steel with wall thickness identical to pipe in which installed:

a. Babcock & Wilcox.

b. Anvil.

c. Ladish.

d. Taylor Forge.

e. Tube-Line.

f. Tube-Turn.

g. Weld Bend.

3. Flanges, Class 150, ANSI B16.5, raised face, forged steel, threaded or welding neck type where specified and/or required:

a. Anvil.

b. Ladish.

c. National Flange.

d. Taylor Forge.

e. Weld Bend.

D. The following weld fitting manufacturers will be acceptable:

1. Branch pipes more than one size smaller than the diameter of the main pipe:

a. Bonney Forge “Weldolet” or “Threadolet” ASME B16.9.

b. Anvil Forged Steel Weldolet or Threadolet ASME B16.9.

c. “Weldolet”, “Threadolet” and Merit fittings and shaped nipples must have a minimum wall thickness which matches the run pipe and branch pipe wall thickness (whichever is greater) and must be suitable for the working pressure and temperature of the pipe to which they connect.

2. For branch sizes 3 inches and smaller shaped nipple welding fittings with factory beveled ends:

a. Allied Type T-1 and T-2.

b. Anvil.

c. Tube Forgings.

d. Tube-Turn.

e. Wheeling.

f. Do not make any branches by burning a hole in the main and welding in the branch line.

E. The following pipe hanger and support manufacturers will be acceptable:

1. B-Line.

2. Anvil.

3. Fastenal.

4. Michigan Hanger.

5. PHD.

6. Tolco.

F. Grooved style couplings and fittings may be used in lieu of welded or screwed joints specified in this specification before as follows:

1. General Requirements:

a. Couplings and fittings must be listed for fire protection and suitable for the intended application.

b. Gaskets and lubricant must be as indicated in UL Listing or FM Approval and as recommended by the manufacturer for the application.

c. Ductile iron fittings and couplings: Fittings and couplings must be ductile iron and listed for a minimum of 300 pounds per square inch working pressure. Bolts and nuts must be electrogalvanized, or zinc electroplated. Anvil, Grinnell, Gruvlock, Victaulic or equal as acceptable to the ST specification owner.

d. For dry-pipe systems and dry standpipes systems using black steel or galvanized steel pipe, provide rigid or flexible cut groove couplings. Roll grooved couplings and fittings are not allowed.

e. Fittings/coupling for use on the galvanized pipe standpipe systems must be steel with stainless steel or hot dip galvanized steel bolts and nuts.

f. Couplings and fittings for use on black steel pipe must be factory painted/coated with rust inhibiting materials coating).

g. [Fittings/couplings for use on the stainless-steel standpipe systems must be stainless steel with stainless steel bolts and nuts.]

h. [Stainless Steel Couplings: UL listed for fire protection, 316 stainless steel body, 304 or 316 SS bolts and nuts, for rigid and flexible couplings. GroovJoint #24 (rigid) and Victaulic #77s (flexible) or approved equal as acceptable to the ST specification owner.]

i. [For stainless steel piping cut groove must be used for schedule 40 pipe and roll groove must be used for schedule 10 piping.]

2. Mechanical tee fittings are not permitted except for where specifically listed in this specification.

3. Mechanical Tee Fittings: UL listed or FM approved, ductile iron, full body, threaded or grooved end, mechanical tees are acceptable for use on sprinkler cross main piping for branch piping outlets, and standpipes for fire hose valve and air vent outlets. Anvil MT1 or MT2, Victaulic FireLock Style 920, Gruvlock Fig 7045 or 7046 or equal as acceptable to the ST specification owner. Holes must be cut, not burned. Coupons created by hole cut outlets must be secured to the fittings via zip-tie or wire.

4. Factory-formed cut groove ends must be provided for galvanized pipe.

    1) Exception: Up to 10 percent of the grooves may be cut by the contractor if then coated with cold zinc coating.

5. Except for hole cuts associated with mechanical tees, galvanized piping and fittings are to be hot dip galvanized from the factory or shop welded and hot-dipped galvanized after welding.

6. Pipe roll grooves made by the contractor must be made by a tool recognized by the grooved coupling manufacturer.

7. Coupling manufacturer's groove depth control tool must be used for field and shop grooved piping.

8. Couplings and fittings provided for a single facility (e.g., garage, station, trainway) must be of one manufacturer.

G. The following flange gasket manufacturers will be acceptable:

1. Crane.

2. Dallas Gasket.

3. Garlock,

4. Or equal as acceptable to the ST specification owner.

H. Check valves manufactured by one of the following manufacturers will be acceptable:

1. Crane.

2. Anvil.

3. Kennedy.

4. Mueller.

5. Nibco.

6. Victaulic.

7. Viking.

I. Gate valves manufactured by one of the following manufacturers will be acceptable:

1. Mueller.

2. Crane.

3. Croker.

4. Fairbanks.

5. Anvil.

6. Jenkins.

7. Kennedy.

8. Milwaukee.

9. Nibco.

10. Viking.

11. Walworth.

12. Victaulic.

J. Butterfly valves manufactured by one of the following manufacturers will be acceptable:

1. Anvil.

2. Jenkins.

3. Milwaukee.

4. Nibco.

5. Victaulic.

K. Floor control valves manufactured by one of the following manufacturers will be acceptable:

1. Croker.

2. Elkhart “Pressure-Matic”.

3. Guardian.

4. Potter-Roemer.

5. Standard “Pressuretrol.”

6. Zurn.

L. Specialty valves such as alarm check valves, deluge, dry pipe valves and double interlocked preaction sprinkler systems (or single interlocked preaction sprinkler system) manufactured by one of the following manufacturers will be acceptable:

1. Tyco.

2. Victaulic.

3. Anvil.

4. Notifier.

5. Reliable Sprinkler Company.

6. Viking Corp.

2.05 STEEL PIPE AND FITTINGS

A. Black steel piping must be ASTM A53/A53M Grade B (Grade A acceptable for up to 4 inch), ASTM A135/A135M or ASTM A795/A795M.

B. Galvanized piping must be hot-dipped ASTM A795/A795M or ASTM A53/A53M Grade B.

C. Stainless steel piping must be ASTM A312/A312M Type 316S).

D. Pipe must be manufactured in the United States and approved for fire protection use.

E. Electric resistance welded pipe must be fully normalized at the seams after welding.

F. Pipe sizes larger than 6-inch must not be utilized for guideway standpipe systems.

G. Pipe type and wall thickness must be in accordance with the drawings and the following:

1. Standpipe systems:

a. Guideway (up to and including 6-inch diameter only) Including Guideway Piping Passing Through Stations and Garages:

1) Schedule 40, stainless steel (2-1/2-inch & smaller diameter).

2) Schedule 10, stainless steel (larger than 2-1/2-inch diameter).

3) Schedule 40, galvanized steel.

b. Stations (all diameters):

1) Schedule 40 galvanized steel.

2) Schedule 40 steel pipe, painted after installation, may be used in lieu of galvanized pipe in enclosed areas of enclosed stations.

c. Parking Garages (all diameters):

1) Schedule 40 black steel pipe, painted after installation.

2) Schedule 40 galvanized steel for areas exposed to direct or wind-blown precipitation.

d. Wet standpipe systems (heated facilities only):

1) 1 inch through 2-1/2 inches: Schedule 40 black steel

2) 2-1/2 through 6 inches: Schedule 10 black steel.

2. Wet-pipe systems including supply/feed mains):

a. 1 inch through 2-1/2 inches: Schedule 40 black steel

b. larger than 2-1/2 inches: Schedule 10 black steel

3. Dry-pipe and preaction sprinkler systems (all diameters):

a. [Schedule 40 galvanized steel.]

[Schedule 40 black steel pipe, painted after installation, and provided with a desiccant dryer].

Designer:

In consultation with ST specification owner select either galvanized steel pipe or painted black steel pipe.

Painting the pipe may be specified in another part of the contract for aesthetics If so, drop the requirement from this specification or revise it read "by others".

At the time of publishing this guide specification ST Ops was not allowing nitrogen generating system for dry-pipe systems. This position could change over time and the designer is to confer with ST to discuss corrosion prevention.

H. Coat all exposed threads and mechanical tee hole cut outs on galvanized pipe with 93 percent zinc rich coating.

I. Fire protection systems utilizing Schedule 40 pipe to be of threaded for diameters of 2-inch and below, and of welded or cut groove construction for diameters of 2-1/2-inch and above. Do not use roll groove construction on dry pipe or preaction systems.

J. Guideway standpipe systems utilizing Schedule 40 pipe to be threaded for diameters of 2-inch and below, and of butt welded or cut groove construction for diameters of 2-1/2-inch and above. Schedule 10 stainless piping may be roll grooved.

K. Mechanical tees are not allowed except for sprinkler branch lines, fire hose outlets and air release valves. Locate outlets in the side or top of the pipe only

L. Guideway standpipe systems must have a maximum working pressure of 300, or greater if necessary to meet hydraulic demand.

M. Flanges are required for servicing and/or removal of equipment for repair in butt welded systems. Schedule 10 pipe to be joined by roll grooved fittings only.

N. Flange connections must have matching flat faces or raised faces and meet system pressure requirements. Steel flanges must have a medium tool finish and must be flat face medium finish. Grooved 150-pound flange adapters must be Victaulic 45F or Gruvlok Fig. 7084 using flange washers to join to the rubber faced serrated flanged components or raised faced flanges. Serrated flanges or raised face flanges must use a full-face red rubber gasket between the grooved flange washer and the flange to provide an acceptable sealing surface. Roll groove flange adapters are acceptable in wet pipe fire protection systems.

O. Screw joints to be made up with approved pipe joint compound. Screw threads are to be in accordance with American Pipe Thread Standards.

P. Flange gasket material to be as specified in this specification and must also be suitable for the service and pressure class intended and comply with ANSI B16.21.

1. Gaskets to be minimum 1/16 inch thick for all pipe sizes 10 inch and smaller; and minimum 1/8 inch thick for all pipe sizes 12 inch and larger. Gaskets must be ring type between raised face flanges and full-face type between flat face flanges with punched bolt holes and pipe opening.

2. Gaskets to be compressed non-asbestos with a nonstick clean surface and factory applied parting agent applied to both sides of the gasket.

3. Gaskets to contain no asbestos.

Q. Flange bolting materials for flanges in service at 399 degrees Fahrenheit or below to be carbon steel ASTM A307 Grade B hexagon head bolts and nuts. Cap screws utilized with flanged butterfly valves must be ASTM A307 Grade B cap screws with hexagon heads. Flange bolt thread lubricant must be an anti-seize compound. Thread lubricant designed for temperatures up to 1000 degrees Fahrenheit, must be Crane Anti-seize Thread Compound or equal as acceptable to the ST specification owner. Where the configuration or arrangement of flanges prevent the installation of machine bolts, stud bolts are an acceptable alternative. Flange bolts and nuts for galvanized pipe must be hot-dipped galvanized. Flange bolts and nuts for stainless steel pipe must be stainless steel.

2.06 DUCTILE-IRON PIPE AND FITTINGS

A. Ductile-Iron Pipe: AWWA C151 cement lined, Class 51 or 53 compatible with TR-Flex boltless restrained joints.

B. Where passing under a ballasted trainway must be cement-lined ductile iron and protected for corrosion using factory applied zinc exterior coating with a biocide enhanced polyethylene encasement or equal as acceptable to the ST specification owner.

C. Fittings: AWWA C153 / ANSI A21.53 Ball and Socket with TR-Flex boltless restrained joints.

D. Mechanical-Joints: Limit use of restrained mechanical joints and bolted joints are allowed where ball and socket joints are impractical.

1. Mechanical-Joint, Ductile-Iron Fittings: AWWA C110, ductile- or gray-iron standard pattern.

2. Glands, Gaskets, and Bolts: AWWA C111, ductile- or gray-iron restraining glands, rubber gasket, and stainless-steel bolts and nuts.

2.07 BACKFLOW PREVENTER

A. Backflow Preventor Assembly: Stainless-Steel body with integral control valve and testing ports, OSY valves or butterfly valves with integral tamper switches with flange or groove fittings. UL Listed or FM approved with certified flow characteristics.

B. Pattern: Horizontal, vertical, or N-shaped oriented

C. Approval: Backflow devices must be approved backflow preventor assembly per WAC 246-290.

D. Manufacturer:

1. Ames.

2. Febco.

3. Watts.

4. Zurn.

5. Or equal as acceptable to the ST specification owner

Designer: When there is a need to locate the backflow preventer in a vault, confer with ST and coordinate with Civil.

2.08 SPRINKLER SPECIALTY FITTINGS

A. Sprinkler specialty fittings must be UL listed, with 175 pounds per square inch gauge minimum working-pressure rating and made of materials compatible with piping.

B. Sprinkler Drain and Alarm Test Fittings: Cast- or ductile-iron body; with threaded or locking-lug inlet and outlet, test valve, and orifice and sight glass.

1. Manufacturers:

a. Central Sprinkler Corp.

b. Fire-End and Croker Corp.

c. Viking Corp.

d. Victaulic Co. of America.

C. Sprinkler Branch-Line Test Fittings: Brass body with threaded inlet, capped drain outlet, and threaded outlet for sprinkler:

1. Manufacturers:

a. Elkhart Brass Mfg. Co., Inc.

b. Fire-End and Croker Corp.

c. Potter-Roemer; Fire-Protection Div.

D. Sprinkler Inspector's Test Fitting: Cast- or ductile-iron housing with threaded inlet and drain outlet and sight glass:

1. Manufacturers:

a. AGF Manufacturing Co.

b. Central Sprinkler Corp.

c. G/J Innovations, Inc.

d. Triple R Specialty of Ajax, Inc.

E. Drop-Nipple Fittings: UL 1474, adjustable with threaded inlet and outlet, and seals:

1. Manufacturers:

a. CECA, LLC.

b. Merit.

2.09 LISTED FIRE-PROTECTION VALVES

A. Valves must be UL listed, with minimum pressure rating as specified below. If pressure rating is not specified minimum acceptable rating is 175 pounds per square inch gauge.

B. Valves for the Guideway system are to have a minimum working pressure rating of 300 pounds per square inch gauge.

C. Ball Valves 2-inch NPS and smaller: Provide ball valves for drain service and as shown on Issued for Construction Drawings of size as indicated. Where low point drains are not indicated, provide a drain valve as required by NFPA 13 and NFPA 14 respectively for the Sprinkler and Standpipe systems. Valves located in public areas must be lockable:

1. Furnish ball drains of a full or standard port, female threaded, brass body ball valves design. Forged Brass Body: conform to ASTM B16/B16M with ball and stem of chrome plated brass or stainless steel. Supply seat and stem washer of tetrafluoroethylene TFE and O Ring of Fluoroelastomer. Provide with lockable carbon steel zinc plated handle.

2. Ball Valve: UL Listed and rated for 600 pounds per square inch water-oil-gas (WOG):

    a. Where used for other than drain service provide Indicating Type Ball Valves: UL 1091, with integral indicating device and ends matching connecting piping. Indicator: Provide with pre-wired, single-circuit, supervisory switch suitable for installation in a 115-volt AC electrical system.

3. Manufacturers:

    a. Global Safety Products, Inc.

    b. Milwaukee Valve Company.

    c. Watts Regulator,

    d. Or equal as acceptable to the ST specification owner

D. Butterfly Valves 2-1/2-inch NPS and larger: UL 1091, designed for fire protection service with grooved ends, polyphenylene sulfide blend coated ductile iron body. Disc must be ductile iron conforming to ASTM A536 with electrolysis nickel coating conforming to ASTM B733. Furnish with nitrile (Grade T) seat conforming to ASTM D2000. Use only valves UL Listed for minimum 300 pounds per square inch service in fire protection systems. Furnish valve with gear operated actuator and hand wheel. Actuator must have bronze traveling nut on a steel lead screw contained in ductile iron housing. Valve must have a black alkyd enamel coating. Furnish complete with two single-pole double-throw (SPDT) supervisory switches factory wired to junction box. For guideway standpipe only, furnish without supervisory switches and secure with padlock and chain:

1. Manufacturers:

    a. McWane, Inc.; Kennedy Valve Div.

    b. Mueller Company.

    c. NIBCO.

    d. Pratt, Henry Company.

    e. Victaulic Co. of America.

    f. Gruvlok from Anvil International.

E. Check Valves NPS 2 and Larger: UL 312, swing type, cast-iron body with flanged or grooved ends:

1. Manufacturers: As listed in Article 2.04, in this specification.

F. Gate Valves: UL 262, OS&Y type:

1. NPS 2 and Smaller: Gate valves up to and including 2-inch size Kennedy Figure 66, 175 pounds per square inch gauge cold water, UL listed, bronze body, bronze trim, single disc, outside screw and yoke, screwed bonnet valves with seats of bronze, screwed ends, and tamper switch:

    a. Other Acceptable Manufacturers:

1) Crane Co.; Crane Valve Group; Crane Valves.

2) Hammond Valve.

3) NIBCO.

2. NPS 2-1/2 and Larger: Gate valves 2-1/2-inch through 10-inch, Kennedy Figure 4068, 175 pounds per square inch gauge cold water, UL listed and approved iron body, outside screw and yoke bolted bonnet valves with double or single disc, Class 125 ASME B16.1 flanged ends, bronze trim, bronze seats, and tamper switch:

a. Other Acceptable Manufacturers: As listed in Article 2.04, in this specification.

2.10 SPECIALTY VALVES

A. Equipment must be UL listed.

B. Dry Pipe System:

1. Dry Pipe Valves (ALV):

a. Dry pipe and pre action valves must be equal to Victaulic NXT with low pressure regulator (or equal as acceptable to the ST specification owner) to reduce water delivery time.

b. Provide where indicated a dry pipe valve equipped to give a signal upon operation, complete with standard trimmings, including water and air pressure gauges, test by-pass and necessary piping, fittings and accessories required for a complete installation.

c. They system must be designed to limit the number of drain valve points with most of the water drained back to the main drain valve.

d. Provide pressure alarm switch. Electric connection to the Fire Alarm Panel will be by electrical requirements as required by the Contract.

e. Provide a low air pressure trouble switch. Field electric connection will be per the requirements of the fire detection and alarm as required by the Contract. Switch will alarm at the Fire Alarm Panel. Coordinate switch requirements with the fire detection and alarm requirements as required by the Contract.

f. Dry pipe valves must be in accordance with UL 260.

2. Flow Control (Deluge) Valve: Automatic valve for filling tunnel dry standpipe automatically and manually:

a. Quick opening, differential diaphragm flood valve with spring-loaded clapper. UL Listed, FM Approved as an on-off multi cycle valve. Viking model J Flow Control Valve with Model 11591 solenoid valve and local manual activation valve.

b. Two position ignition switch style keyed maintenance bypass switch and signage applicable to the application.

c. Within the same room, there must also be a butterfly valve and normally closed test connection located downstream of the deluge control valve such that deluge control valve testing may be performed without requiring the full standpipe system to be flooded:

3. Compressors: Provide air compressors in accordance with NFPA 13, the drawings, and the following:

   a. Where more than one dry-pipe system is in a riser room, a single tank-mounted compressor must serve all dry-pipe valves. Riser mounted compressors are permitted for location with only a single system.

   b. Tank mounted compressors must be limited to serve up to eight dry-pipe systems and 5,000 gallons total.

   c. Compressors must be rated fire protection (UL 1450 VDUR), rated below 65 dBA when operating, and powered by a hard-wired dedicated circuit with a local disconnect switch per NEC 430.102(B).

   d. An air-maintenance device must be provided for each dry-pipe and pre-action system.

   e. Electrical requirements must be suitable for the voltage provided and conform to the drawings. Desiccant manual air dryers to remove water from compressed air systems.

   f. Coalescing filter to protect desiccant filter from oil vapor and other contaminants, when applicable.

   g. Desiccant air dryer, General Air AD3500, or equal as acceptable to the ST specification owner.

C. Wet-pipe System:

1. Wet-pipe system must be provided with a basic wet-pipe riser assembly in accordance with NFPA 13.

2. A basic wet-pipe riser assembly must be provided with an indicating butterfly isolation valve, check valve, paddle type waterflow switch, main drain valve, inspectors test connection with site glass where required, and pressure gage with service valve. Combination test and drain devices are permitted. Components must meet the requirements of this specification.

D. Automatic Drain Valves: UL 1726, NPS 3/4, ball-check device, straight or angle pattern with threaded ends. Valve is used to drain low point of system between fire department connection and swing check valve. Seals automatically under pressure:

1. Manufacturers:

   a. AFAC Inc.

   b. Grinnell Fire Protection.

   c. Potter Roemer,

   d. Or equal as acceptable to the ST specification owner.

E. Automatic Air/Vacuum Valve (AAVV): UL 2573, Valve is used to vent air from a pressurized fire protection system and allow for air to enter the system to help facilitate draining:

1. Manufacturers/models:

   a. Cla-Val 33ATD.

   Designer: The products listed below are not listed for fire service but appropriate for the application and acceptable to ST. Obtain AHJ concurrence for the use of these products or specify an alternate product.

b. Valmatic 100s (Not UL listed for fire service but acceptable if approved by the AHJ)

c. Cla-Val 35 (Not UL listed for fire service but acceptable if approved by the AHJ), or equal as acceptable to the ST specification owner.

F. Drain and Other Valves:

1. Listed Fire-Protection Valves: UL listed and/or FM approved for applications where required by NFPA 13 and NFPA 14. Unless valve type is called out on the Issued for Construction Drawings provide:

a. Shutoff Duty or Fire Isolation Valves (FIV): Butterfly or gate valves.

b. Auxiliary Drain: Ball valves with lockable handle.

2. Unlisted General-Duty Valves: For applications where UL-listed and FM-approved valves are not required by NFPA 13 and NFPA 14. Unless valve type is called out on the Issued for Construction Drawings provide:

a. Shutoff Duty: Butterfly or gate valves.

b. Throttling Duty: Globe valves.

3. Drum drips: Drum drips must be provided where required by NFPA 13, with vertical orientation, lockable ball valves, brass hose bib, and auxiliary drain sign.

4. Air venting valves:

a. Pressure relief valve: UL ### Design to relieve excess pressure caused by pressure surges or temperature changes in wet-pipe sprinkler systems.

2.11 SPRINKLERS

A. Sprinklers must be UL listed and/or FM approved, with 175 pounds per square inch gauge minimum pressure rating.

B. Manufacturers:

1. AFAC Inc.

2. Central Sprinkler Corp.

3. Firematic Sprinkler Devices, Inc.

4. Globe Fire Sprinkler Corporation.

5. Grinnell Fire Protection.

6. Reliable Automatic Sprinkler Co., Inc.

7. Star Sprinkler Inc.

8. Venus Fire Protection, Ltd.

9. Victaulic Co. of America.

10. Viking Corp.

C. Automatic Sprinklers: With heat-responsive element complying with the following:

1. UL 199, for nonresidential applications.

2. UL 1767, for early-suppression, fast-response applications.

D. Sprinkler Types and Categories: Nominal 1/2-inch orifice for "Ordinary" temperature classification rating, unless otherwise indicated or required by application.

E. Sprinkler types, features, and options as follows:

1. Concealed ceiling sprinklers, including cover plate.

2. Flush ceiling sprinklers, including escutcheon.

3. Pendent sprinklers.

4. Quick-response sprinklers.

5. Recessed sprinklers, including escutcheon.

6. Sidewall sprinklers.

7. Upright sprinklers.

F. Sprinkler Finishes: Chrome plated, bronze, and painted.

G. Special Coatings: Wax, lead, and corrosion-resistant paint.

H. Sprinkler Escutcheons: Materials, types, and finishes for the following sprinkler mounting applications. Escutcheons for concealed, flush, and recessed-type sprinklers are specified with sprinklers:

1. Ceiling Mounting: Chrome-plated steel, one piece, flat.

2. Sidewall Mounting: Chrome-plated steel, one piece, flat.

I. Sprinkler Guards: Provide UL listed sprinkler guards for sprinkler heads subject to mechanical damage or for any sprinkler lower than 7 ft. - 0 in. above the floor and as indicated required by the Contract.

J. Sprinkler Cabinet: Finished steel cabinet and hinged cover, with space for minimum of 6 spare sprinklers plus sprinkler wrench, suitable for wall mounting:

1. Include number of sprinklers required by NFPA 13 and 2 wrenches for sprinklers.

2. Include separate cabinet with sprinklers and wrench for each style sprinkler on Project.

3. Cabinet shelves must be marked with a permanently attached etched metal or plastic sign to indicate each type of sprinkler head installed and their locations within the building.

2.12 FIRE HOSE OUTLET VALVES

A. Provide Fire Hose Valves (FHV) for use by the AHJ Fire Department installed on the standpipe systems.

B. Manufacturers:

1. Elkhart Brass Mfg. Co., Inc.

2. Fire-End and Croker Corp.

3. Potter-Roemer; Fire-Protection Div.,

4. Or equal as acceptable to the ST specification owner.

C. Standard Hose Valves:

1. Non-pressure reducing/restricting 21/2-inch angle type cast brass; UL 688 Listed and valve rated to 300 pounds per square inch. Furnish with die cast aluminum wheel and the AHJ Fire Department compatible 2.5-inch male hose thread outlet:

   a. Garage: Rough chrome plate or rough brass finish.

   b. Station, Guideway, and other facilities: Rough Chrome Plate Finish.

2. Hose outlet must be located between 36 and 60 inches above finished floor.

3. Provide hose valves as scheduled on the fire protection drawings.

4. Provide threaded brass female caps, with 1/8-inch drain hole in the face, and brass chain for elevated guideways, tunnels, and other areas not accessible to the public.

5. Provide threaded thermoplastic female caps with 1/8-inch drain hole in the face, and a corrosion resistant metal chain for locations accessible to the public including fire hose valves located in egress stairs and inside fire hose cabinets. Firehose Direct NH Cap or equal as acceptable to the ST specification owner.

D. Standpipe Hose Valve Cabinets:

1. Where required to conceal the fire sprinkler standpipe hose valves, contractor must provide fire rated hose valve cabinets. Cabinet trim style and colors must be coordinated with and approved by the architect prior to ordering.

2. Fire-Rated Hose Valve Cabinet must be listed and labeled to comply with requirements of ASTM E814 for fire-resistance rating of walls where they are installed.

3. Construction:

   a. Cabinets must be constructed of cold-rolled sheet steel with double walls fabricated from 0.0428-inch- (1.1-mm-) thick, cold-rolled steel sheet lined with minimum 5/8-inch- (16-mm-) thick, fire-barrier material. Provide factory-drilled mounting holes.

   b. Finish: Baked enamel or powder coat. Color as selected by Contracting officer and approved by AHJ from full range or industry colors and color densities.

   c. Fully recessed cabinet: One-piece combination trim and perimeter door frame overlapping surrounding wall surface with exposed trim face and wall return at outer edge (backbend). Trim must be same material and finish as the door.

   d. Door must be one-piece sheet metal with continuous piano hinge, viewing panel, and tamper resistant door hardware.

4. Identification: Lettering complying with authorities having jurisdiction for letter style, size, spacing, and location.

2.13 FIRE DEPARTMENT CONNECTIONS

A. Manufacturers:

1. AFAC Inc.

2. Central Sprinkler Corp.

3. Elkhart Brass Mfg. Co., Inc.

4. Fire-End and Croker Corp.

5. Fire Protection Products, Inc.

6. GMR International Equipment Corporation.

7. Guardian Fire Equipment Incorporated.

8. Potter-Roemer; Fire-Protection Div.

9. Reliable Automatic Sprinkler Co., Inc.

10. United Brass Works, Inc.

B. [Conventional Wall-Type, Fire Department Connection: UL 405, [175/300]pounds per square inch gauge minimum pressure rating; with corrosion-resitant-metal body with brass chrome plated inlets, brass wall chrome plated escutcheon plate, plastic plugs with metal chain , unless locking caps are required, and brass lugged swivel connections. Inlets must include:]

1. [National Fire Hose (NH) threads according to NFPA 1963 and matching the AHJ Fire Department threads.]

2. [Outlets with pipe threads and extension pipe nipples for each inlet.]

3. [Check devices or clappers for inlets.]

4. [When required by the AHJ, escutcheon plate with raised letters at least 1-inch in size with marking similar to "STATION AUTO SPKR" and “STANDPIPE" or similar as a part of the nameplate.]

C. [Conventional Freestanding type, Fire Department Connection: UL 405, [175/300] pound per square inch gauge minimum pressure rating, with brass or painted (black) ductile iron body, brass snoots attached with thread locker, and threaded plastic plugs with metal chain unless locking caps are required by the AHJ. A welded and hot-dipped galvanized steel manifold is permitted with welding certificate and pressure test certificate. Inlets must include:]

1. [National Fire Hose (NH) threads according to NFPA 1963 and matching the AHJ Fire Department threads.]

2. [Outlets with pipe threads and extension pipe nipples for each inlet.]

3. [Check devices or clappers for inlets.]

D. [When required by the AHJ, escutcheon plate with raised letters at least 1-inch in size with marking similar to "AUTO SPKR" and “STANDPIPE" or similar as a part of the nameplate.] [Storz Type Fire Department Connection: Wall or freestanding as indicated in drawings, UL Listed, 250 PSI, rated forged T6160 aluminum adaptor with silver powder coat finish, red identification plate, nitrile gasket, and rocker lug outlet. Inlets must include:]

1. [4-inch / 5inch Storz connection inlet with Fe NPT threads.]

Designer: determine the correct size and threads by inquiring with the AHJ.

2. [Cap with weep hole and corrosion resistant chain or Storz locking cap when required by the AHJ.]

E. Signage must be provided at each FDC, complying with Sound Transit and AHJ requirements. Signage must be aluminum or corrosion-resistant steel with UV resistant paint/coating, red background with 1-inchtall white lettering unless required to be otherwise by the local AHJ. Signs must indicate the following at a minimum:

1. System Type.

2. Area served including street, station, or other geographical reference for guideway standpipes.

3. Pumping zones and associated fire hose valve numbers for guideway standpipe systems with multiple zones.

4. Required FDC inlet pressure, and flow if required by the AHJ, for systems with an inlet pressure greater than 175 PSI.

5. FDC identification tag if allowed by the AHJ. Otherwise provide a separate sign (black with white letters).

6. Signs must be fastened to a nearby wall or other flat surface using corrosion resistant fasteners. A corrosion resistant bracket may be used to mount to the freestanding FDC when no other nearby flat surface is available.

F. See Division 10 of the specifications for AHJ required door and room signage by others.

G. FDC Specifics:

1. See below for Inlet and Outlet requirements per jurisdiction.

Designer: Please list specific requirements for each AHJ including type, orientation, outlet angle, height above grade, finish, locking caps (if required), etc.

2.14 [FIRE PUMP]

Designer: revise and expand this section as needed for the specific project. A preliminary hydraulic analysis must be conducted to inform the basis of design. Coordinate design with the electrical consultant.

A. [Provide horizontal split-case or vertical inline fire pump with electric motor drive and all associated components and materials (jockey pump, pump controllers, power transfer switch, test meter, and test header in accordance with the IFC and NFPA 20. Fire pump must be selected by design-build contractor to meet the hydraulically most remote fire sprinkler system requirements, with preliminary basis of design as noted below. Contractor must conform to NFPA-20 in its entirety including testing/commissioning:]

1. [### gpm at ## psi pressure boost (Basis of Design).]

2. [Test header with external hose connections. Test loops are not allowed.]

3. [UL Listed/FM Global Approved.}

4. [Commission fire pump & associated equipment in accordance with NFPA 20 Chapter 14 & Section 21 08 00 – Commissioning of Fire Suppression.]

B. [Manufacturers:]

1. [Patterson.]

2. [Peerless.]

3. [Aurora.]

4. [AC Pump.]

C. [Fire pump controllers must meet the following specifications:]

1. [Controllers must be installed within a freestanding NEMA 2 type enclosure and have a withstand rating of 100,000 RMS symmetrical amperes @ ### volts.]

2. [The controller must include a motor rated combination isolating switch and circuit breaker, mechanically interlocked and operated with a single externally mounted handle.]

3. [The isolating switch must be rated to disconnect the motor load.]

4. [The isolating switch/circuit breaker combination must be mechanically interlocked such that the enclosure door cannot be opened when the handle is in the 'on' position except by a tool operated defeater mechanism.]

5. [The controller must include an integral automatic power transfer switch within a separate compartment of the controller which is rated for no less than 115 percent of the motor full-load current. The transfer switch must be mechanically and electrically interlocked so that it is not possible for the pump to be connected to both normal and emergency power at the same time.]

6. [A Soft Start or Wye Delta Closed fire pump controller must be provided.]

D. [Fire Alarm Monitoring:]

1. [Provide valve tamper switches and controller contacts for the following:]

a. [Valve supervision.]

b. [Controller - connected to alternate power source supervisory alarm.]

c. [Controller - Auto/off/manual supervisory alarm.]

d. [Controller – trouble alarm.

e. [Controller - Fire pump running.]

2.15 ALARM DEVICES

A. Alarm-device types must match piping and equipment connections.

B. Electric Bell or Equal: UL 464, with two sets of contacts, red finish, 24VDC powered by FACP. Provide a bell unless the AHJ requires a different device:

1. Manufacturers:

a. ASC Engineered Solutions.

b. FPPI.

c. Potter Electric Signal Company.

d. System Sensor.

e. Reliable Automatic Sprinkler Co., Inc.

f. Viking Corp.

C. Water-Flow Indicator – Paddle Type: UL 346, electrical-supervision, paddle-operated-type, water-flow detector with 250 pounds per square inch gauge pressure rating and designed for horizontal or vertical installation. Include two single-pole, double-throw circuit switches for isolated alarm and auxiliary contacts, 7 A, 125-volt AC and 0.25 A, 24-volt DC;

complete with factory-set, field-adjustable retard element to prevent false signals and tamperproof cover that sends signal if removed.

1. Manufacturers:

   a. ADT Security Services, Inc.

   b. Grinnell Fire Protection.

   c. ITT McDonnell & Miller.

   d. Potter Electric Signal Company.

   e. System Sensor.

   f. Viking Corp.

   g. Watts Industries, Inc.; Water Products Div.

D. Water-Flow Indicator – Pressure Switch Type: UL 346, electrically supervised, pressure activated. Include two single-pole, double-throw circuit switches for isolated alarm and auxiliary contacts:

1. Manufacturers:

   a. Grinnell Fire Protection.

   b. Potter Electric Signal Company.

   c. System Sensor.

   d. Viking Corp.

E. Valve Supervisory Switch: UL 753, electrical, single-pole, double-throw switch with normally closed contacts. Include design that signals controlled valve is in other than fully open position:

1. Manufacturers:

   a. McWane, Inc.; Kennedy Valve Div.

   b. Potter Electric Signal Company.

   c. System Sensor.

2.16 PRESSURE GAUGES

A. Manufacturers:

1. AGF Manufacturing Co.

2. AMETEK, Inc.; U.S. Gauge.

3. Brecco Corporation.

4. Dresser Equipment Group; Instrument Div.

5. Marsh Bellofram.

6. WIKA Instrument Corporation.

B. Description: UL 393, 3-1/2- to 4-1/2-inch diameter, dial pressure gage with range of 0 to 250 pounds per square inch gauge minimum:

1. Water System Piping: Liquid-filled, Include caption "WATER" or "AIR/WATER" on dial face.

2. Air System Piping: Include retard feature and caption "AIR" or "AIR/WATER" on dial face.

2.17 EXPANSION/SEISMIC JOINT ASSEMBLY

A. Provide listed piping expansion joint sufficient to accommodate anticipated expansion or seismic movement or provide sufficient flexible couplings at structural expansion joints to accommodate anticipated movement:

1. Expansion joint assembly utilized along guideway must not conflict with the light rail vehicle dynamic clearance envelope.

2. Expansion joints and seismic joints used in dry-pipe sprinkler systems and dry-standpipes system must not trap water or require access to a dedicated/integral drain point for drainage. Provide products that do not trap water in the installed configuration.

3. Ensure material separation for corrosion control.

4. Ensure equipment pressure ratings exceed the maximum system working pressure.

5. Coupling material must match piping material unless dissimilar material isolation kits are provided.

6. Expansion/seismic joint assembly must be internally and externally coated for corrosion resistance. Where located within unconditioned spaces, exterior surface coating must be installed with a factory-installed, UV-stable, and weather-resistant coating. Assemblies must fully drain if used for dry-pipe sprinkler systems or dry standpipes.

7. Systems using multiple flexible coupling in series are permitted for horizontal standpipes but must be provided with a support assembly to control movement and preclude trapping water.

B. Manufacturers:

1. Anvil International.

2. EBAA Iron, inc.

3. Grinnell.

4. GroovJoint.

5. GruvLock.

6. Metraflex.

7. Victaulic.

2.18 HEAT TRACING

A. Provide UL 515A listed heat tracing combined with thermal insulation, fire alarm system monitoring, and connected to permanent power on a dedicated circuit:

1. Supply main as indicated in the drawings.

2. Heat tracing is not permitted for sprinkler branch lines or other applications.

Designer: For large parking garages and other large unheated facilities it is preferred to provide two separate riser rooms located on exterior walls served by separate underground lead ins. Heat tracing will be considered where practical difficulties exist. Please confer with ST SME and indicate where heat tracing will be allowed on the drawings.

PART 3 - EXECUTION

3.01 PIPING APPLICATIONS, GENERAL

A. Install sprinkler systems in accordance with NFPA 13, and NFPA 130 for stations, buildings, and guideways.

B. Install standpipes in accordance with NFPA 14, and NFPA 130 for stations and guideways.

C. Flanges, flanged fittings, unions, nipples, and transition and special fittings with finish and pressure ratings same as or higher than the specified products pressure rating may be used in aboveground applications as shown on Issued for Construction Drawings, subject to approval by the Resident Engineer.

D. Above ground piping between Fire Department Connections and Check Valves: Galvanized, Schedule 40 steel pipe with grooved ends; grooved-end fittings; grooved-end-pipe couplings; and grooved joints.

E. Above ground piping to extend the fire service lead-in to the backflow preventer in the Riser Room inside the building. Ductile iron per Article 2.06, in this specification.

F. Above ground guideway piping between Fire Department Connections and Check Valves: Schedule 10 or Schedule 40 stainless steel pipe or Schedule 40 galvanized steel pipe with grooved ends; grooved-end fittings; grooved-end-pipe couplings; and grooved joints and meet minimum system operational pressures.

G. Underground Service-Entrance Piping and underground fire department connection piping: Ductile-iron pipe and fitting per Article 2.06, in this specification, meeting the requirements of NFPA 24.

H. Underground piping installed under the ballasted guideway must be installed in a sleeve with casing spacers located every 6-8 feet.

I. Piping must be accessible and must not be embedded in concrete structures unless embedment is unavoidable because of architectural or structural requirements. Embedded piping must be provided with adequate access points and must be hydrostatically and pressure tested to 20 psi above the maximum working pressure before the concrete is poured in accordance with NFPA 14.

J. Piping in public areas of stations must not be exposed unless indicated in Issued for Construction Drawings. Any exposed piping must be painted in a color that blends in with the surrounding areas.

K. Flexible coupling may be used for small angular pipe deflections when allowed by the manufacturer to the limit permitted in the product literature reduced by what is needed for thermal expansion and contraction of the pipe. See Submittals and transmittals, Article 1.04, in this specification for required calculations.

L. Holes cut in galvanized piping for mechanical tees must be protected with cold galvanization coating during assembly.

M. Backflow devices must be located so that they may be serviced from the room floor without a portable ladder.

N. Provide fire hose valves downstream of the backflow device to facilitate forward flow testing in accordance with NFPA 25.

3.02 STANDPIPE SYSTEM PIPING APPLICATIONS

A. Guideway:

1. Install standpipe piping pitched at least ¼ inch per 10 feet in accordance with NFPA 14.

2. Arrange piping so that it can be thoroughly drained, as practical at 2-inch main drains located at fire department connections and low point drains accessible from grade. Ball drip valve may be provided to supplement, but not replace manual drain valves.

3. [Locate fire hose valves on the top of the pipe to simplify draining.]

4. Ensure the standpipe systems, valves, supports, and appurtenances do not encroach into the pedestrian envelope or the dynamic envelope of the train.

5. Provide ball drip valves (automatic drains) between fire department connections and check valves.

6. Provide isolation valves every 800 feet in accordance with NFPA 130 and the drawings, unless waived in writing by the AHJ.

7. Different standpipe segments may utilize different piping materials, but consistent pipe, coupling, and fitting materials must be utilized within each segment. Provide dissimilar material kits for expansion joints and other components of dissimilar materials.

8. Grooving tool sets must be the same manufacturer as the grooved components.

9. Grooving roll set are to be specific to stainless steel and for the appropriate pipe schedule for stainless steel pipe applications.

3.03 SPRINKLER SYSTEM PIPING APPLICATIONS

A. Products section and drawings indicate the pipe, fittings, couplings, and joints to use.

3.04 SERVICE ENTRANCE PIPING

A. Connect to the below-ground water source just outside building as shown on Issued for Construction Drawings.

B. Install supervised shutoff valve and pressure gage in each feed ahead of common tee connection, to allow for independent servicing of each water feed for the fire protection system.

C. For the buried pipe entrance(s) into the building, provide adequately sized galvanized sleeve cast in place in the wall and seal annular space between pipe and sleeve using modular rubber sealing unit. Coordinate with the requirements of Sleeve Seals - Specification 21 05 17 and Common Work Results for Fire Suppression - Specification 21 05 00.

D. Provide fire hose valves appropriately arranged for periodic testing of the backflow preventer.

3.05 STANDPIPE COMPONENT INSTALLATION

A. Install the standpipe systems as indicated on Contract Drawings and in accordance with requirements of NFPA 14.

B. Install standpipe piping so that it can be thoroughly drained and, where practicable, arranged to drain at the main drain valves.

C. Provide a 2-inch main drain, as required per NFPA 14 and at FDCs serving elevated guideway manual dry standpipes systems. The valve must be lockable if accessible to the public.

D. Valve accessibility for operation and servicing is required. Install valves as indicated and with no stems located below the horizontal position.

E. Provide a pressure gauge at the top of each standpipe.

F. Provide escutcheon plates at finished surfaces where exposed piping passes through floors, walls, and ceilings. Fasten escutcheons to pipe or pipe coverings.

G. Install listed fire-protection valves, trim and drain valves, specialty valves and trim, controls, and specialties according to NFPA 14, the AHJ Fire Department and drawings.

H. Coordinate the installation of pipes, hangers, valves, and all other items of the fire protection system with the work of all other trades so that all components will be installed to avoid conflicts and provide for proper servicing and maintenance of mechanical and electrical equipment in the ceiling plenums and equipment rooms.

3.06 SPRINKLER PIPING INSTALLATION

A. Refer to the requirements of Common Work Results for Fire Suppression - Specification 21 05 00, for basic piping installation.

B. Locations and Arrangements: Contract Drawing Plans, Schematics, and Diagrams indicate general location and arrangement of piping. Install piping as indicated, to implement the esthetic intent of the Contract Drawings:

1. Deviations from approved Contractor developed working plans for piping will require written approval from the AHJ Fire Department. File written approval with Resident Engineer before deviating from approved working plans.

2. Exposed piping must be installed parallel to or at right angles to the column lines of the building. Springing or forcing piping into place will not be permitted. Install piping in such a manner to prevent strain on the equipment.

C. Install unions adjacent to each valve in pipes NPS 2 and smaller. Unions are not required on flanged devices or in piping installations using grooved joints.

D. Install flanges or flange adapters on valves, apparatus, and equipment having NPS 2-1/2 and larger connections.

E. Install listed fire-protection shutoff valves supervised-open, located to control sources of water supply except from fire department connections. Install permanent identification signs indicating portion of system controlled by each valve.

F. Furnish and install all sleeves and fire proofing as required when penetrating inside walls and floors.

G. Install "Inspector's Test Connections" in sprinkler system piping, complete with shutoff valve, sized and located according to NFPA 13.

H. Drains valves must not be located in, or within 10 feet of the trainway.

Auxiliary drains valves must be located 80 inches above the access point in public areas for garages and 9 feet for stations and remain accessible by portable ladder. Auxiliary drains located in public areas must be equipped with locking valves.

I. Auxiliary drains in secured areas must be located at five feet above the access point.

J. Auxiliary drains and other equipment requiring periodic access for maintenance must not located in the trainway at stations.

K. Route pipe through beam sleeve to eliminate the need for auxiliary drains for beam drops. Install sprinkler piping with drains for complete system drainage. Grade piping to eliminate traps and pockets. Where traps cannot be avoided provide auxiliary drains.

L. Install ball drip valves to drain piping between fire department connections and check valves.

M. Main drains associated with sprinkler systems and semiautomatic standpipe automatic flow (deluge) valves must discharge within the riser room to a sanitary sewer sized to accommodate full flow. Provide a 1-inch air gap between the top of the sanitary sewer from the bottom of the drainpipe.

Designer: Coordinate with civil to provide a 6-inch diameter sanitary sewer with an eight in diameter extension to 24 inches above the floor.

N. Provide 2-inch main drains for guideway standpipe systems in accordance with NFPA 14 and to ensure the system can be fully drained in less than 30 minutes. Automatic drains are not permitted as a substitute for manual drains if trapped water exceeds 10 gallons or produces more than 7 PSI of water pressure. Drains points with both manual and automatic drains are permitted. Manual drains must be readily accessible from grade, or the trainway.

O. Install alarm devices and flow switches in piping systems as indicated on the Issued for Construction Drawings.

P. Wet-pipe risers: Install in vertical position in accordance with NFPA 13.

Q. Install pressure gages on riser or feed main and at each sprinkler test connection. Include pressure gages with connection not less than NPS 1/4 and with soft metal seated globe or ball valve, arranged for draining pipe between gage and valve. Install gages to permit removal without a system shutdown.

R. Coordinate the installation of pipes, hangers, valves, and all other items of the fire protection system with the work of all other trades so that all components will be installed to avoid conflicts and provide for proper servicing and maintenance of mechanical and electrical equipment in the ceiling plenums and equipment rooms.

S. Heat Tracing and insulation for supply mains must be installed in accordance with NFPA 13, UL 515, and IEEE515.1.

T. Sprinkler heads may not be located over the dedicated electrical space of electrical panels as defined by the NEC.

3.07 HANGER AND SUPPORT INSTALLATION

A. Pipe hanger and support installation of the pre-engineered pipe hanger and seismic restraint system must conform to the following:

1. Comply with MSS SP 58. Install hangers, supports, clamps, and attachments as required to properly support piping.

2. Design and space supports as indicated in NFPA 13. Comply with NFPA 13 for hanger material selection. Install additional supports for flow induced thrust and other concentrated loads, including valves, flanges, guides, strainers, and expansion joints, and at changes in direction of piping. Install concrete inserts before concrete is placed; fasten inserts to forms.

3. Install expansion anchors in concrete after concrete is placed and completely cured. Install fasteners according to manufacturer's written instructions.

4. Install hangers and supports and seismic bracing in accordance with NFPA 13 or ASCE -10, complete with necessary inserts, bolts, rods, nuts, washers, and other accessories.

5. Install hangers and supports to allow controlled thermal and seismic movement of piping systems, to permit freedom of movement between pipe anchors, and to facilitate action of flexible couplings, expansion loops, expansion bends, and similar units.

6. Load Distribution: Install hangers and supports so that piping live and dead loads and stresses from movement will not be transmitted to connected equipment.

7. Pipe Slopes: Install hangers and supports to provide indicated pipe slopes and so maximum pipe deflections allowed by ASME B31.9 are not exceeded.

B. Piping hanger, support, and brace installation for guideway dry standpipe must account for the following:

1. Thermal expansion of the piping system over the course of the year. Thermal expansion calculation must assume a temperature range of 0F to 140F which accounts for convective and radiative heat gain, and 0F to 120F for tunnels.

2. Reduction in flexible coupling capacity when using couplings for angular deflection in addition to linear thermal movement.

3. Thrust forces and water hammer forces for the piping and fire department connections.

4. Structural expansion joint and the type of piping expansion joint to be used.

5. Seismic forces.

Designer: For guideway dry standpipe systems, the hangers, supports, and bracing must be determined by the fire protection engineer and structural engineer and detailed sufficiently in the IFC drawings so that the engineering technician may complete the design. The structure used to support the piping (stanchion, fence, retaining wall, and guideway structure) must be evaluated for a complete system.

3.08 CONSTRUCTION

A. Welding:

1. Shop-fabricate all major piping assemblies.

2. Field welding, in general, is not permitted. In specific cases and only with the approval of the Resident Engineer may the Contractor be allowed to field-weld. Submit request to field weld with sufficient proof that no other method is feasible.

3. All welds must have 100 percent penetration and smooth lines of fusion on the exterior and interior. Do not exceed 1/16-inch weld reinforcement.

4. Examine welds as defined in Quality Assurance (item 2.05 in this specification).

B. Galvanized Pipe and Surfaces:

1. Shop welding must occur before hot-dipped galvanized pipe for sub-assemblies required to be galvanized. Mechanical tees are permitted for galvanized guideway standpipe systems as indicated in this specification in Products. Apply galvanizing-repair paint at cut-out holes.

2. Where field welding is permitted, clean welds, bolted connections, field cut grooved pipe, and abraded areas on galvanized pipe and apply galvanizing-repair paint as required by the Contract. Repairs must be made in accordance with ASTM A780/A780M

3.09 SPRINKLER APPLICATIONS

A. Drawings indicate sprinkler types to be used. Where specific types are not indicated, use the following sprinkler types, in accordance with NFPA 13, AHJ Fire Department, and approved shop drawings and pipeline layout drawing submitted in accordance with Article 1.06, in this specification:

1. Rooms without Ceilings: Upright sprinklers.

2. Rooms with Suspended Ceilings: Pendent sprinklers.

3. Wall Mounting: Sidewall sprinklers.

4. Sprinkler Finishes:

a. Upright, Pendent, and Sidewall Sprinklers: Chrome plated in finished spaces exposed to view; rough brass in unfinished spaces not exposed to view; wax coated where exposed to acids, chemicals, or other corrosive fumes.

b. Concealed Sprinklers: Rough brass, with factory-painted white cover plate.

c. Flush Sprinklers: Bright chrome, with painted white escutcheon.

d. Recessed Sprinklers: Bright chrome, with bright chrome escutcheon.

3.10 SPRINKLER INSTALLATION

A. Install sprinklers in suspended ceilings in center of narrow dimension of acoustical ceiling panels and tiles and at ¼ intervals for the long dimension. Architectural sensitive areas are shown on Issued for Construction Drawings including the Architectural reflected ceiling plans.

B. Areas subject to freezing:

1. Provide upright sprinkler or dry-type pendant or sidewall sprinklers for dry-pipe systems.

2. Where possible provide dry type heads connected to wet-pipe sprinklers to protect canopies and roof projections, where required.

Designer: Indicate where dry type heads are expected on the IFC drawings for clarity.

3. Provide pendant sprinklers on return bends in accordance with NFPA 13 for dry-pipe systems in heated rooms with ceilings when installed.

Designer: The use of return bends should be noted on the drawing to clarify a separate wet-pipe system is not required when the aggregate area of heated space is small (< 2,000 sf per FLS Set 601 and it is possible effectively drain the system).

4. Heat tracing is not permitted for sprinkler system mains and branch lines.

3.11 HOSE-CONNECTION INSTALLATION

A. Install hose connections adjacent to standpipes, unless otherwise indicated.

B. Freestanding hose connections must be installed to maintain access and minimum passage restriction.

C. Install hose-connection valves without flow-restricting device, unless otherwise indicated.

D. Install wall-mounting-type hose connections in cabinets as required in Specification 10 44 00 - Fire Protection Specialties and Issued for Construction Drawings. Include pipe escutcheons, with finish matching valves, inside cabinet where water-supply piping penetrates cabinets. Install valves at angle required for connection of fire hose in accordance with NFPA14 and as required by the local AHJ.

3.12 FIRE DEPARTMENT CONNECTION INSTALLATION

A. Install wall-type, fire department connections in vertical wall, or free standing, as shown on Issued for Construction Drawings.

B. Install ball drip valve at each check valve for fire department connection.

C. Where FDC system piping connection is grooved joint type, locate the mechanical coupling at least 12 feet above grade to prevent theft and use a threaded connection to brass FDC manifold, where brass manifolds are used.

3.13 CONNECTIONS

A. Drawings indicate general arrangement of piping, fittings, and specialties.

B. Install piping adjacent to equipment to allow service and maintenance.

C. Connect water-supply piping to fire-suppression piping. Include backflow preventer between potable-water piping and fire-suppression piping. Refer to Water and Utility Distribution Pipe – Specification 33 11 00 and Issued for Construction Drawings.

D. Route 2-inch main drains from wet-pipe-dry-pipe, preaction, and deluge valves to a 30-inch high 8-inch diameter steel funnel drain connected to a 6-inch sanitary server. Provide a 1-inch air gap between the top of the funnel drain and the bottom of the 2-inch drain. Gang all drains together to serve multiple low points.

E. Connect piping to specialty valves, hose valves, specialties, fire department connections, and accessories.

F. Electrical Connections: Power wiring is specified in the requirements of low-voltage electrical power conductors and cables in the Contract.

G. Connect alarm devices to fire alarm.

H. Ground equipment according to the requirements of grounding and bonding for electrical systems as required by the Contract.

I. Connect wiring according to the requirements of low-voltage electrical power conductors and cables as stated in the Contract.

3.14 LABELING AND IDENTIFICATION

A. Comply with the requirements of mechanical identification as stated in the Contract.

B. Install labeling and pipe markers on equipment and piping according to requirements in NFPA 13 and NFPA 14 as required by the Contract..

C. All signage and labels must be secured with fasteners, adhesive, or other approved means as outlined in this specification and as required by the Contract.

D. All signs exposed to moisture, varying temperatures and sunlight must be designed to perform in the environment.

E. Valve/Equipment Labels:

1. Label Content:

a. Include equipment's Issued for Construction Drawing designation or unique equipment number, Contract Drawing numbers where equipment is indicated (plans, details, and schedules).

b. Information indicating the type of valve or equipment, and area served, when fire department interface is expected and when required by codes and standards.

2. Material and Thickness: Multilayer, multicolor, phenolic engraved white lettering on red background, 1/8 inch thick, and having predrilled holes for attachment hardware if the label is to be mounted with fasteners.

3. Identification: Provide a unique identifying number complying with Sound Transit standards and requirements.

4. Minimum Label Size: Length and width vary for required label content, but not less than 2-1/2 inches by 3/4 inch.

5. Minimum Letter Size: 1 inch and proportionately larger lettering for greater viewing distances. Include secondary lettering (e.g., identification number) two-thirds to three-fourths the size of principal lettering.

6. Fasteners: Stainless-steel rivets or stainless-steel self-tapping screws.

7. Adhesive: Contact-type permanent adhesive, compatible with label and with substrate

F. Valve/equipment labels must be provided for equipment scheduled in the basis of design drawings and the following:

1. Fire Protection Control, Lead In, Segment, and Isolation Valves.

2. Fire Hose Valves.

3. Dry-Pipe, Preaction and Deluge Valves.

4. Alarm Valves associated with Wet-Pipe Systems.

5. Check Valves.

6. Guideway Expansion Joints.

7. Backflow Preventers.

8. Air Compressor.

9. Air Dryers.

10. Air Release / Vacuum Valves.

G. Drain Valve Signs: Provide signs for main drains, auxiliary drains, and automatic drains in accordance with NFPA 13 and NFPA 14. Signs must be aluminum with red background and white letters and may be hung using wire seal or beaded metal chains, or equal as acceptable to the ST specification owner. ST identification numbering is not required for these valves and other trim valves.

H. Hydraulic Information Signs: Provide a hydraulically design information sign in accordance with NFPA 13:

1. Such signs must be placed at the alarm valve, dry pipe valve, preaction valve, or deluge valve supplying the corresponding hydraulically designed area.

2. Signs must be aluminum with laser engraved data.

3. Secure to the system riser.

I. Information Sign: The installing contractor must provide an information sign, or document box, in accordance with NFPA 25:

1. Such signs must include location of the area served, location or auxiliary drains and low-point drains, the presence of heat trace, and other information as required, and be placed at each system control riser. Signs must be aluminum or rigid phenolic plastic with aluminum backing. Document box must accommodate a binder for 8.5x11-inch paper.

J. Fire Department Connection Signs: Signage must be provided at each FDC, complying with Sound Transit and AHJ requirements. Signage must be 10-gauge aluminum sheet metal with 3M Diamond Grade DG reflective sheeting, ASTM Type XI with pre-drilled holes, or equal as acceptable to the ST specification owner. FDC Signs must have red background with minimum 1-inch-tall white lettering unless required to be otherwise by the local AHJ. Signs must indicate the following at a minimum:

1. System Type.

2. Area served including street, station, or other geographical reference for guideway standpipes.

3. Pumping zones and associated fire hose valve numbers for guideway standpipe systems with multiple zones.

4. Required FDC inlet pressure, and flow if required by the AHJ, for systems with an inlet pressure greater than 175 PSI.

5. FDC identification tag if allowed by the AHJ. Otherwise provide a separate sign (black with white letters).

6. Signs must be fastened to a nearby wall or other flat surface using corrosion resistant fasteners. A corrosion resistant bracket may be used to mount to the freestanding FDC when no other nearby flat surface is available.

Designer: The FDC signs outlined above are to be specified for all systems including guideway standpipe systems. Engraved metal signs may substitute for these signs at architecturally sensitive locations at stations when approved by the AHJ. Coordinate with architect to determine the need for architecturally sensitive signs.

K. Fire Hose Cabinets Signs: Identify fire hose cabinets with lettering not less than 1 inches high (2-inch high for cabinets without vision panels) with the ST equipment identification number at ½ inch. If a sign is provided for the cabinet, one is not needed for the valve.

L. All signage, tags, and labeling must be reviewed and approved by Sound Transit and the local AHJ prior to fabrication or installation. See submittal requirements.

3.15 VALVE LIST

A. For guideway standpipe system provide a valve list to be used as a fire department reference in fire command centers and fire control rooms. The list must include fire hose valve and sectional valves. Specific information for each valve must include standpipe segment number, ST valve identification number, trainway mileage marker, mileage distance and note that indicates associated FDCs.

3.16 PAINTING

A. Prepare piping system to be free from grease, oil, rust, and scale, and make ready for the application of paint in compliance with the requirements of painting and coating as required by the Contact. Provide protective covering to keep paint away from the sprinkler heads.

3.17 FIELD QUALITY CONTROL

A. Flushing of Piping: Underground mains and lead in connections to system risers must be completely flushed before connection is made to sprinkler and standpipe piping. The minimum rate of flow must not be less than that indicated in NFPA 13. All flushing water must be dechlorinated and disposed of in a manner acceptable to the Resident Engineer.

B. Testing (General):

1. Testing outlined within this Section are required regardless of testing required by the AHJ. Any AHJ requirements must be in addition to these requirements.

2. Perform 100 percent visual inspection of completed system.

3. Contractor must provide and dispose of the quantity of water necessary for testing.

4. Test installed systems and products hydrostatically, using testing instruments calibrated by an Independent Testing Laboratory in accordance with quality assurance/quality control requirements as required by the contract. Repair leaks and retest the system.

a. Test standpipe hydrostatically for two hours without loss in pressure, using the most convenient outlet connection. The test pressures for the standpipe system are as follows:

1) Minimum 200 pounds per square inch gauge test pressure or 50 pounds per square inch in excess of the maximum working pressure (whichever is greater) that must be maintained without loss for two hours.

2) The guideway standpipe must be tested with the following pressures at the high point of the system:

a) Minimum 200 pounds per square inch gauge test pressure or 50 pounds per square inch in excess of the maximum working pressure (whichever is greater) that must be maintained without loss for two hours.

b. Test all sprinkler system piping and appurtenances subject to system working pressure using a minimum 200 pounds per square inch gauge

test pressure or 50 pounds per square inch in excess of the maximum working pressure (whichever is greater) that must be maintained without loss for two hours.

c. In addition to the hydrostatic tests, the dry system will be subjected to an air pressure leakage test for 24 hours using 40 pounds per square inch gauge air with less than 1-1/2 pounds per square inch loss over the test period.

d. After testing, confirm system can be completely drains using main drains, auxiliary drains, and fire hose valves where allowed to be used as a drain.

e. Place system into service for final acceptance when systems are operational or when directed by the Resident Engineer.

5. Conduct [garage, OMF] standpipe system flow test(s) in accordance with NFPA 14 including but not limited to the following:

a. Standpipe Systems: Flow 250 gallons per minute from each of the two (2) most remote hose valves in the most remote stairwell and 250 gpm at each additional stairwell, up to a maximum of 1,000 gpm with an outlet pressure of [100 psi] to verify residual pressure(s) with pumper truck assist. The contractor must provide a pump, hoses, dichlorination equipment and other necessary equipment for this test.

6. Conduct guideway, station, and garage standpipe system fill-time test and flow test(s) in accordance with NFPA 14, NFPA 130, and additional criteria outlined in Letters of Concurrence and other agreements. The contractor must provide a pump, hoses, dichlorination equipment and other necessary equipment for this test:

a. Fill-time test (Dry and semi-automatic systems only): The flow test must be conducted at the design fill rate (used to calculate fill time) to confirm the fill time meets NFPA 130 and to demonstrate air release valve performance and resistance from thrust forces and water hammer.

b. Flow test: Pump the system to the design inlet pressure (greatest pressure for multiple zone systems) and measure water flow and residual pressure at the remote fire hose valves. The number of hose valves must be based up the design criteria. Confirm complete drainage may be achieved by opening main and auxiliary drains following this test. Garage and open station flow test are not required if formally waived by the AHJ as outlined in NFPA 14.

c. [Tunnel automatic flow control (deluge) valve: Test the function of the semi-automatic standpipe automatic fill valve as with a mode launch.]

Designer: The fill time using the automatic valve is not required by ST but may be required by the AHJ, please determine requirement and revise this Section as needed.

C. Perform tests in the presence of the Resident Engineer and AHJ Fire Department. Give 48-hour notice prior to test and notify the AHJ Fire Department and AHJ Utilities Department. The Resident Engineer will review certificates and test reports, and will inspect the standpipe and sprinkler system to verify conformance with Standards and other References in the Specifications including NFPA 130, NFPA 14 and NFPA 13.

3.18 TRAINING

A. Engage a factory-authorized service representative to train Sound Transit's maintenance personnel to adjust, operate, and maintain water-based fire suppression systems and equipment.

3.19 COMMISSIONING

A. Testing outlined above must be accounted for in commissioning procedures and test records when commissioning is included in the contract.

END OF SECTION

SECTION 22 05 00

COMMON WORK RESULTS FOR PLUMBING

PART 1 - GENERAL

1.01 SUMMARY

A. Section includes:

1. Requirements for materials and installation common to most piping systems including dielectric fittings, mechanical sleeve seals, sleeves, escutcheons, grout, equipment, concrete bases, and supports and anchorages.

1.02 REFERENCES

A. This Section incorporates by reference the latest revisions of the following documents:

1. American Society of Mechanical Engineers (ASME):

a. ASME B1.20.1 Pipe Threads, General Purpose (Inch).

2. ASTM International (ASTM):

a. ASTM B32 Standard Specification for Solder Metal.

b. ASTM B813 Standard Specification for Liquid and Paste Fluxes for Soldering of Copper and Copper Alloy Tube.

c. ASTM B828 Standard Practice for Making Capillary Joints by Soldering of Copper and Copper Alloy Tube and Fittings.

d. ASTM C1107 Standard Specification for Packaged Dry, Hydraulic-Cement Grout (Nonshrink).

e. ASTM D2261 Standard Test Method for Tearing Strength of Fabrics by the Tongue (Single Rip) Procedure (Constant-Rate-of-Extension Tensile Testing Machine).

3. American Welding Society (AWS):

a. AWS A5.8 Specification for Filler Metals for Brazing and Braze Welding.

b. AWS D1.1 Errata for Structural Welding Code – Steel.

c. AWS D10.12 Guide for Welding Mild Steel Pipe.

B. Definitions:

1. Finished Spaces: Spaces other than plumbing and electrical equipment rooms, furred spaces, pipe chases, unheated spaces immediately below roof, spaces above ceilings, unexcavated spaces, crawlspaces, and tunnels.

2. Exposed, Interior Installations: Exposed to view indoors. Examples include finished occupied spaces and plumbing equipment rooms.

3. Exposed, Exterior Installations: Exposed to view outdoors or subject to outdoor ambient temperatures and weather conditions. Examples include rooftop locations.

4. Concealed, Interior Installations: Concealed from view and protected from physical contact by building occupants. Examples include above ceilings and in chases.

5. Concealed, Exterior Installations: Concealed from view and protected from weather conditions and physical contact by building occupants but subject to outdoor ambient temperatures. Examples include installations within unheated shelters

1.03 SUBMITTALS

A. Submit:

1. Provide as-built drawings of all building plans in accordance to Division 01 As-Built Documents specification. As-Built drawings shall include as a minimum the location and performance data on each piece of equipment, general configuration of pipe distribution system, including sizes, and water design flow rates of the actual installation. As-Built drawings shall also incorporate any mechanical work which deviates from the contract drawings, including changes resulting from addenda, Requests for Information, and Change Orders. Neatly draft changes on clean “hard copy” drawings to show the work clearly in the actual locations as built.

a. Operating Instructions:

1) Provide operating and maintenance instructions in accordance with Division 01 Operation and Maintenance Data specification. The training of the appropriate maintenance staff for each equipment type and/or system shall include, as a minimum, the following.

2) System/Equipment overview (what it is, what it does and which other systems and/or equipment does it interface with).

3) Review of the available operations and maintenance (O&M) materials in accordance with Division 01 Operation and Maintenance Data specification.

4) Review of the Record Drawings on the subject system/equipment, including valve schedules and zone distribution.

5) Hands-on demonstration of all normal maintenance procedures, normal operating modes, and all emergency shutdown and startup procedures.

B. Transmit:

1. Drawings:

a. Drawings are diagrammatic, indicating the general arrangement of systems and work. Examine the architectural drawings for exact location of fixtures and equipment. Where they are not definitely located, obtain this information from the Resident Engineer.

1) Follow drawings in laying out work and check drawings of other trades to verify spaces in which work will be installed. Maintain maximum headroom. If space conditions appear inadequate, notify the Resident Engineer before proceeding with the work.

Make reasonable modifications in the work without extra cost as needed to prevent conflict with work of other trades and for proper execution of the work.

2. Product Data: For each type of product indicated.

3. Fire Department Connection, sign layout drawings for each location.

4. Emergency Tunnel Ventilation System Equipment, sign schedule and layout drawings.

5. Documentation.

1.04 QUALITY ASSURANCE

A. Material and Work:

1. Materials and equipment required for the work shall be new and shall be furnished, delivered, erected, installed, connected, and finished in every detail; and shall be selected and arranged to fit properly into the building spaces. Where no specific kind or quality of material is given, an article as approved by the Resident Engineer shall be provided.

2. Furnish the services of an experienced superintendent, who shall be constantly in charge of the work.

B. Coordination:

1. Provide control and electrical wiring details including power supply connections for any dry systems requiring power and control or any electrically activated valves that require interface with control systems.

2. Drawings are diagrammatic, indicating the general arrangement of systems and work. Examine the architectural drawings for exact location of fixtures and equipment. Where they are not definitely located, obtain this information from the Resident Engineer:

a. Follow drawings in laying out work and check drawings of other trades to verify spaces in which work will be installed. Maintain maximum headroom. If space conditions appear inadequate, notify the Resident Engineer before proceeding with the work. Make reasonable modifications in the work without extra cost as needed to prevent conflict with work of other trades and for proper execution of the work.

C. Cooperation with other trades:

1. Give full cooperation to other tradesand furnish in writing to other trades, with copies to the Resident Engineer, any information necessary to permit the work of all trades to be installed satisfactorily and with the least possible interference or delay.

2. Plumbing contractor must inspect and accept the installation work area and furnish in writing to the prime contractor with copies to Resident Engineer prior to starting the installation work.

3. Where plumbing work will be installed in close proximity to, or will interfere with work of other trades, assist in working out space conditions to make a satisfactory adjustment. If work is installed before coordinating with other trades, or if it causes any interference with work of other trades, make the necessary changes in the work to correct the conditions and bear all costs.

4. Furnish to other trades necessary templates, patterns, setting drawings and shop details for the proper installation of work and for coordinating adjacent work. This includes participation and support of any Building Information Modeling efforts associated with this contract.

D. Record Documentation:

1. As-built drawings shall include as a minimum the location and performance data on each piece of equipment, general configuration of pipe distribution system, including sizes, and water design flow rates of the actual installation. As-built drawings shall also incorporate any mechanical work which deviates from the contract drawings, including changes resulting from addenda, Requests for Information, and Change Orders. Neatly draft changes on clean “hard copy” drawings to show the work clearly in the actual locations as built.

E. Operating Instructions:

1. Provide operating and maintenance instructions in accordance with Specification Section 01 78 23 Operation and Maintenance Data

a. System/Equipment overview (what it is, what it does and which other systems and/or equipment does it interface with).

b. Review of the available operations and maintenance (O&M) materials in accordance with Specification Section 01 78 23 Operation and Maintenance Data.

c. Review of the Record Drawings on the subject system/equipment, including valve schedules and zone distribution.

d. Hands-on demonstration of all normal maintenance procedures, normal operating modes, and all emergency shutdown and startup procedures.

1.05 DELIVERY, STORAGE AND HANDLING

A. Deliver pipes and tubes with factory-applied end caps. Maintain end caps through shipping, storage and handling to prevent pipe end damage and to prevent entrance of dirt, debris, and moisture.

B. Store plastics pipes away from direct sunlight. Support to prevent sagging and bending.

C. Accessibility:

1. Install the work with adequate clearances throughout the project, including being responsible for the sufficiency of the size of shafts, chases, double partitions, and suspended ceilings. Cooperate with other trades where work is in the same space. Such spaces and clearances shall be kept to the minimum size required.

2. Locate all equipment that must be serviced, operated, or maintained in fully accessible positions.

3. The Fire Protection Subcontractor shall provide the General Contractor the exact locations of access panels for each concealed valve, or other device requiring service. Access panels will be provided and installed by the General Contractor and as specified in the other divisions of the specifications. Submit locations of these panels to the General Contractor in sufficient time to be installed in the normal course of work.

1.06 PROJECT CONDITIONS

A. Cutting and patching:

1. Provide drilling, coring, cutting, and patching necessary to install the work specified in this division. Patching shall match adjacent surfaces.

2. No structural members shall be cut without the approval of the Resident Engineer, and cutting shall be done in a manner directed by them. Do not damage or endanger any portion of the project or work of the Owner or any other separate contractor by drilling, coring, cutting, patching, excavating, and backfilling.

3. Inform the General Contractor and other subcontractors affected of requirements for cutting and patching.

B. Boxes, Sleeves and Chases:

1. Inform the General Contractor of requirements for boxes, sleeves, and chases. The General Contractor shall set boxes, sleeves, and chases. Furnish General Contractor with the boxes and sleeves and be responsible for informing General Contractor of required location.

1.07 WARRANTY

A. All work, materials, and equipment to be free from defects as required in Division 00 Procurement and Contracting Requirements.

B. The warranty disregards shorter time limits by any manufacturer of equipment provided.

C. Make all necessary adjustments and corrections during first year of operation. The fact that the Resident Engineer was present during any construction does not relieve the Contractor from responsibility for defects discovered after completion of the work.

PART 2 - PRODUCTS

2.01 MANUFACTURED PRODUCTS

A. Joining Materials:

1. Manufacturers:

a. Capital Manufacturing Co.

b. Central Plastics Company.

c. Watts Industries Inc. Water Products Div.

d. Zurin Industries, Inc. Wilkins Div.

e. Or approved equal.

2. Description:

a. Fittings are to be the same size and compatible with the piping to be joined. Pressure rating for fittings shall at least be equal to the piping that is to be joined.

3. Materials:

a. Unless indicated otherwise the following shall be used as joining materials for plumbing work:

1) Pipe-Flange Gasket Materials: nonmetallic, flat, asbestos-free, 1/8-inch maximum thickness unless thickness or specific material is indicated.

2) See other sections for isolating flange gasket kits.

3) Plastic, Pipe-Flange Gasket, Bolts, and Nuts: Type and material recommended by piping system manufacturer, unless otherwise indicated.

4) Solder Filler Metals: lead-free alloys.

5) Brazing Filler Metals: BCuP Series or BAg1, unless otherwise indicated

6) Solvent Cements for Joining Plastic Piping

a) CPVC Piping: ASTM F493

b) PVC Piping: ASTM D2564. Include primer according to ASTM F656

B. Dielectric Fittings:

1. Description:

a. Combination fitting of copper alloy and ferrous materials with threaded, solder-joint, plain, or weld-neck end connections that match piping system materials.

2. Performance:

a. Dielectric Unions: Factory-fabricated, union assembly, for 250-psig minimum working pressure at 180 degrees F.

b. Dielectric Unions: Factory-fabricated, union assembly, for 250-psig minimum working pressure at 180 degrees F.

c. Dielectric Flanges: Factory-fabricated, companion-flange assembly, for 300-psig minimum working pressure as required to suit system pressures.

d. Dielectric Couplings: Galvanized-steel coupling with inert and noncorrosive, thermoplastic lining; threaded ends; and 300-psig minimum working pressure at 225 degrees F.

e. Dielectric Nipples: Electroplated steel nipple with inert and noncorrosive, thermoplastic lining; plain, threaded, or grooved ends; and 300-psig minimum working pressure at 225 degrees F.

3. Insulating Material :

a. Suitable for system fluid, pressure, and temperature.

C. Floor Plates:

1. Description:

a. One-Piece Floor Plates: Cast iron flange with holes for fasteners.

D. Flexible Expansion Joint:

1. Description for Vent and Roof Drain Pipe Flexible Expansion Joint:

a. Flexible loop capable of 4-inches movement in three planes and consisting of two flexible sections of hose and stainless steel braid, two 90-degree bends and one 180-degree return bend with hanger support nut and drain/air release plug. Provide MetraFlex Metraloop or equal.

b. Performance:

1) 150 psi rated.

2. Description for Domestic Hot and Cold Water Pipe Flexible Expansion Joint:

a. Flexible loop capable of 4-inches movement in three planes and consisting of two flexible sections of bronze hose and braid, two 90-degree bends and one 180-degree return bend with hanger support nut and drain/air release plug. Provide MetraFlex Metraloop or equal.

b. Comply with state codes and standards, where applicable, requiring reduced lead content.

c. Performance:

1) 150 psi rated at 70 degrees F.

E. Access Panels:

1. Manufacturers: Subject to compliance with requirements, available manufacturers offering products that may be incorporated into the Work include, but are not limited to, the following:

a. Croker FRP.

b. Mifab.

2. Description:

a. Manufactured stainless steel access panel to provide access to utilities in walls and ceilings.

b. Dimensions: Scheduled.

3. Assembly or Fabrication:

a. Continuous hinge with universal latch. Material shall be minimum 16-gauge door and frame and shall be listed for fire rated applications

PART 3 - EXECUTION

3.01 INSTALLATION

A. Piping Systems:

1. Contract Drawing, schematics, and diagrams indicate general location and arrangement of piping systems. Indicated locations and arrangements were used to size pipe and calculate friction loss, expansion, pump sizing, and other design

considerations. Install piping as indicated unless deviations to layout are approved on Coordination Drawings.

2. Install piping in concealed locations, unless otherwise indicated and except in equipment rooms and service areas.

3. Install piping indicated to be exposed and piping in equipment rooms and service areas at right angles or parallel to building walls. Diagonal runs are prohibited unless specifically indicated otherwise.

4. Install piping above accessible ceilings to allow sufficient space for ceiling panel removal.

5. Install piping to permit valve servicing.

6. Install piping at indicated slopes.

7. Install piping free of sags and bends.

8. Install fittings for changes in direction and branch connections.

9. Install piping to allow application of insulation, when applicable.

10. Select system components with pressure rating equal to or greater than system operating pressure.

11. Install escutcheons for penetrations of finished walls, ceilings, and floors.

12. Install floor plates for piping penetrations of equipment-room floors. Install floor plates with ID to closely fit around pipe, tube, and insulation of piping and with OD that completely covers opening.

13. Verify final equipment locations for roughing-in.

14. Install flexible expansion joints where indicated on drawings and where piping crosses building seismic joints. Install vertical support hanger within 4 pipe diameters on each side of the flexible joints and seismic joint. Brace each hanger longitudinally and transversely. Install vertical support at 180-degree return bend.

B. Equipment:

1. Install equipment to allow maximum possible headroom unless specific mounting heights are not indicated.

2. Install equipment level and plumb, parallel and perpendicular to other building systems and components in exposed interior spaces, unless otherwise indicated.

3. Install plumbing equipment to facilitate service, maintenance, and repair or replacement of components. Connect equipment for ease of disconnecting, with minimum interference to other installations. Extend grease fittings to accessible locations.

4. Install equipment to allow right of way for piping installed at required slope.

C. Construction:

1. Join pipe and fittings according to the following requirements.

2. Ream ends of pipes and tubes and remove burrs. Bevel plain ends of steel pipe.

3. Remove scale, slag, dirt, and debris from inside and outside of pipe and fittings before assembly:

   a. Threaded Joints: Cut threads full and clean using sharp dies. Ream threaded pipe ends to remove burrs and restore full ID. Join pipe fittings and valves as follows:

      1) Apply appropriate tape or thread compound to external pipe threads unless dry seal threading is specified.

      2) Damaged Threads: Do not use pipe or pipe fittings with threads that are corroded or damaged.

4. Soldered Joints: Apply water-flushable flux, unless otherwise indicated, to tube end. Construct joints using lead-free solder alloy.

5. Brazed Joints: Construct joints using copper-phosphorus brazing filler metal.

6. Welded Joints: Construct joints according to AWS D10.12, using qualified processes and welding operators according to Part 1 "Quality Assurance" Article:

   a. Damaged Threads: Do not use pipe sections that have cracked or open welds.

7. Flanged Joints: Select appropriate gasket material, size, type, and thickness for service application. Install gasket concentrically positioned. Use suitable lubricants on bolt threads.

D. Pipe Connections: Make connections according to the following, unless otherwise indicated:

1. Install unions, in piping NPS 2 and smaller, adjacent to each valve and at final connection to each piece of equipment.

2. Install flanges, in piping NPS 2-1/2 and larger, adjacent to flanged valves and at final connection to each piece of equipment.

3. Wet Piping Systems: Install dielectric coupling and nipple fittings to connect piping materials of dissimilar metals.

4. Underground, Exterior-Wall Penetrations: Install dielectric couplings and isolating flange gaskets for all underground piping connection the above piping. Coordinate locations and installation with corrosion control systems.

5. Coordinate locations and installation with corrosion control systems.

3.02 CONCRETE BASES

A. Anchor equipment to concrete base according to equipment manufacturer’s written instructions, according to Authority having Jurisdiction Seismic Codes, and Division 03 Anchorage to Concrete Specification

1. Construct concrete bases of dimensions indicated, but not less than 4 inches larger in both directions than supported unit with chamfer edges.

2. Install dowel rods to connect concrete base to concrete floor as shown on structural drawings.

3. Install Type 304 stainless steel anchors for supporting equipment that extends through concrete base, and anchors into structural concrete floor. Provide dieelectric insulation between dissimilar metals.

4. Place and secure anchorage devices. Use supported equipment manufacturer's setting drawings, templates, diagrams, instructions, and directions furnished with items to be embedded.

5. Install anchor bolts to elevations required for proper attachment to supported equipment.

6. Install anchor bolts according to anchor-bolt manufacturer's written instructions.

7. Use minimum 4,000-psi, 28-day compressive-strength concrete.

END OF SECTION

SECTION 22 05 17

SLEEVES AND SLEEVE SEALS FOR PLUMBING

PART 1 - GENERAL

1.01 SUMMARY

A. Section includes:

1. Requirements for the following:

a. Sleeves.

b. Stack-sleeve fittings.

c. Sleeve-seal systems.

d. Sleeve-seal fittings.

e. Grout.

1.02 REFERENCES

A. This Section incorportates by reference the latest revisions of the following documents:

1. ASTM International ASTM):

a. ASTM A53.

b. ASTM E84/E814.

c. ASTM A377.

d. ASTM A-653.

e. ASTM A-888.

f. ASTM C1107.

g. ASME B36.10.

2. Underwriters Lab (UL):

a. UL (FRD) – Fire Resistance Directory.

1.03 SUBMITTALS

A. Submit:

1. Product Data: For each type of product indicated (Submittals shall be reviewed by Plumbing ans Structural EOR for applicability.)

PART 2 - PRODUCTS

2.01 COMPONENTS

A. Sleeves:

1. Cast-Iron Wall Pipe Sleeves: ASTM A377, Cast or fabricated of cast or ductile iron and equivalent to ductile-iron pressure pipe, with plain ends and integral waterstop unless otherwise indicated.

2. Cast Iron Pipe sleeves: ASTM A-888 Cast Iron pipe with plain ends.

3. Galvanized-Steel Wall Pipes: ASTM A 53/A 53M, Schedule 40, with plain ends and welded steel collar; zinc coatedor equal corrosion inhibitor coating.

4. Galvanized-Steel-Pipe Sleeves: ASTM A53/A 53M, Type E, Grade B, Schedule 40, zinc coated, with plain ends.

5. Galvanized-Steel-Sheet Sleeves: ASTM A653, 0.0239-inch minimum thickness; round tube closed with welded longitudinal joint.

B. Stack-Sleeve Fittings:

1. Manufacturers: Subject to compliance with requirements, available manufacturers offering products that may be incorporated into the Work include, but are not limited to, the following:

a. Jay R. Smith Mfg. Co.

b. Wade.

c. Zurn.

2. Description: Manufactured, cast-iron sleeve with integral clamping flange. Include clamping ring, bolts, and nuts for membrane flashing:

a. Underdeck Clamp: Clamping ring with setscrews.

C. Sleeve-Seal Systems:

1. Manufacturers: Subject to compliance with requirements, available manufacturers offering products that may be incorporated into the Work include, but are not limited to, the following:

a. Advance Products & Systems, Inc.

b. CALPICO, Inc.

c. Metraflex Company (The).

d. Link-Seal.

e. Pipeline Seal and Insulator, Inc.

f. Proco Products, Inc.

2. Description: Modular sealing-element unit, designed for field assembly, for filling annular space between piping and sleeve.

a. An assembly consisting of a stainless steel frame, a compression mechanism, and insert modules for pipe, duct and tubing.

b. Comply with F- and T-ratings as required by local codes, code official, and as tested in accordance with ASTM E814 or UL1479.

c. Sealing Elements: EPDM-rubber interlocking links shaped to fit surface of pipe. Include type and number required for pipe material and size of pipe.

d. Designs should be water and gas tight to 14.5 psi.

e. Seals shall be asbestos free, lead free, halogen free.

f. Pressure Plates: Stainless steel.

g. Connecting Bolts and Nuts: Stainless steel of length required to secure pressure plates to sealing elements.

D. Sleeve-Seal Fittings:

1. Manufacturers: Subject to compliance with requirements, available manufacturers offering products that may be incorporated into the Work include, but are not limited to, the following:

a. Hold Rite.

b. Metraflex Company (The).

c. Pipeline Seal and Insulator, Inc.

2. Description: Manufactured plastic, sleeve-type, waterstop assembly made for imbedding in concrete slab or wall. Unit has plastic or rubber waterstop collar with center opening to match piping OD.

E. Grout:

1. Standard: ASTM C 1107/C 1107M, Grade B, post-hardening and volume-adjusting, dry, hydraulic-cement grout.

2. Characteristics: Nonshrink; recommended for interior and exterior applications.

3. Design Mix: 5000-psi, 28-day compressive strength.

4. Packaging: Premixed and factory packaged.

PART 3 - EXECUTION

3.01 INSTALLATION

A. Sleeve Installation:

1. Install sleeves for piping passing through penetrations in floors, partitions, roofs, and walls. Provide waterproof flashing through exterior above grade roof.

2. For sleeves that will have sleeve-seal system installed, select sleeves of size large enough to provide 1-inch annular clear space between piping and concrete slabs and walls. Sleeves shall be two inches larger than proposed pipe diameter.

a. Sleeves are not required for core-drilled holes.

3. Install sleeves in concrete floors, concrete roof slabs, and concrete walls as new slabs and walls are constructed:

   a. Permanent sleeves are not required for holes in slabs formed by molded-PE or -PP sleeves.

   b. Cut sleeves to length for mounting flush with both surfaces:

      1) Exception: Extend sleeves installed in floors of mechanical equipment areas or other wet areas 2 inches above finished floor level.

   c. Using grout, seal the space outside of sleeves in slabs and walls without sleeve-seal system.

4. Install sleeves for pipes passing through interior partitions:

   a. Cut sleeves to length for mounting flush with both surfaces.

   b. Install sleeves that are large enough to provide 1/4-inch annular clear space between sleeve and pipe or pipe insulation.

   c. Seal annular space between sleeve and piping or piping insulation; use joint sealants appropriate for size, depth, and location of joint. Comply with applicable codes and standards requirements for joint sealants.

5. Fire-Barrier Penetrations: Maintain indicated fire rating of walls, partitions, ceilings, and floors at pipe penetrations. Seal pipe penetrations with firestop materials. Comply with applicable codes and standards requirements for firestopping.

B. Stack-Sleeve-Fitting Installation:

1. Install stack-sleeve fittings in new slabs as slabs are constructed:

   a. Install fittings that are large enough to provide 1/4-inch annular clear space between sleeve and pipe or pipe insulation.

   b. Secure flashing between clamping flanges for pipes penetrating floors with membrane waterproofing. Comply with applicable codes and standard for flashing.

   c. Install section of soil pipe to extend sleeve to 2 inches above finished floor level.

   d. Extend sleeve fittings below floor slab as required to secure clamping ring if ring is specified.

   e. Using grout, seal the space around outside of stack-sleeve fittings.

2. Fire-Barrier Penetrations: Maintain indicated fire rating of floors at pipe penetrations. Seal pipe penetrations with firestop materials. Comply with applicable codes and standards requirements for firestopping.

C. Sleeve-Seal-System Installation:

1. Install sleeve-seal systems in sleeves in exterior concrete walls above and below grade and slabs-on-grade at service piping entries into building.

2. Select type, size, and number of sealing elements required for piping material and size and for sleeve ID or hole size. Position piping in center of sleeve. Center piping

in penetration, assemble sleeve-seal system components, and install in annular space between piping and sleeve. Tighten bolts against pressure plates that cause sealing elements to expand and make a watertight seal.

3. Fire-Barrier Penetrations: Maintain indicated fire rating of wall, floor at pipe penetrations. Seal pipe penetrations with firestop materials. Comply with applicable codes and standards requirements for firestopping.

D. Sleeve-Seal-Fitting Installation:

1. Install sleeve-seal fittings in new walls and slabs as they are constructed.

2. Assemble fitting components of length to be flush with both surfaces of concrete slabs and walls. Position waterstop flange to be centered in concrete slab or wall.

3. Secure nailing flanges to concrete forms.

4. Using grout, seal the space around outside of sleeve-seal fittings.

5. Fire-Barrier Penetrations: Maintain indicated fire rating of floors at pipe penetrations. Seal pipe penetrations with firestop materials. Comply with applicable codes and standards requirements for firestopping.

E. Sleeve And Sleeve-Seal Schedule:

1. Use sleeves and sleeve seals for the following piping-penetration applications:

a. Concrete structural elements (Not covered elsewhere in sleeve and sleeve-seal schedule):

1) Piping Smaller Than NPS 6: Cast-iron pipe sleeves.

2) Piping NPS 6 and Larger: Cast-iron pipe sleeves.

b. Exterior Concrete Walls above Grade:

1) Piping Smaller Than NPS 6: Cast-iron wall pipe sleeves with sleeve-seal system.

a) Select sleeve size to allow for 1-inch annular clear space between piping and sleeve for installing sleeve-seal system.

2) Piping NPS 6 and Larger: Cast-iron wall pipe sleeves with sleeve-seal system.

a) Select sleeve size to allow for 1-inch annular clear space between piping and sleeve for installing sleeve-seal system.

c. Exterior Concrete Walls below Grade:

1) Piping Smaller Than NPS 6: Cast-iron wall pipe sleeves with sleeve-seal system:

a) Select sleeve size to allow for 1-inch annular clear space between piping and sleeve for installing sleeve-seal system.

2) Piping NPS 6 and Larger: Cast-iron wall pipe sleeves with sleeve-seal system:

a) Select sleeve size to allow for 1-inch annular clear space between piping and sleeve for installing sleeve-seal system.

d. Concrete Slabs-on-Grade:

1) Piping Smaller Than NPS 6: Cast-iron wall pipe sleeves with sleeve-seal system:

a) Select sleeve size to allow for 1-inch annular clear space between piping and sleeve for installing sleeve-seal system.

2) Piping NPS 6 and Larger: Cast-iron wall pipe sleeves with sleeve-seal system:

a) Select sleeve size to allow for 1-inch annular clear space between piping and sleeve for installing sleeve-seal system.

e. Concrete Slabs above Grade:

1) Piping Smaller Than NPS 6: Galvanized-steel-pipe sleeves Stack-sleeve fittings.

2) Piping NPS 6 and Larger: Galvanized-steel-pipe sleeves Stack-sleeve fittings.

f. Interior Partitions:

1) Piping Smaller Than NPS 6: Galvanized-steel-pipe sleeves.

2) Piping NPS 6 and Larger: Galvanized-steel-sheet sleeves.

END OF SECTION

SECTION 22 05 50

IDENTIFICATION FOR PLUMBING PIPING AND EQUIPMENT

PART 1 - GENERAL

1.01 SUMMARY

A. Section Includes:

1. Requirements for the following:

a. Equipment labels.

b. Valve tags.

c. Warning signs and labels.

d. Pipe labels.

1.02 REFERENCES

A. This Section incorporates by reference the latest revisions of the following documents:

1. ANSI/ASME International:

a. ANSI/ASME A13.1 Scheme for Identification of Piping Systems.

1.03 SUBMITTALS

A. Submit:

1. Product Data: For each type of product indicated.

2. Schedules: Submit valve schedule for each piping system, typewritten and reproduced on 8-1/2 by 11-inch bond paper for mounting. Tabulate valve number, piping system, system abbreviations as shown on tag, location of valve, and variations for identification. Mark valves that are intended for emergency shut-off and similar special uses with “flags” in the margin of schedule. In addition to mounted copies, furnish copies as required for maintenance manuals.

3. Equipment Label Schedule: For each item of equipment to be labeled, on 8-1/2 by 11-inch bond paper. Tabulate equipment identification number and identify Contract Drawing numbers where equipment is indicated (plans, details, and schedules), plus the Contract Specifications Section number and title where equipment is specified. Equipment schedule shall be included in operation and maintenance data.

4. Samples: Submit samples of each color, lettering style, and other graphic representation required for each identification material or system.

1.04 QUALITY ASSURANCE

A. Material and Work:

1. Materials and equipment required for the work shall be new and shall be furnished, delivered, erected, installed, connected, and finished in every detail; and shall be selected and arranged to fit properly into the building spaces. Where no specific kind or quality of material is given, an article as approved by the Resident Engineer shall be provided.

2. Equipment and materials shall be installed with the approval of the Resident Engineer in accordance with the recommendations of the manufacturer.

B. Coordination:

1. Coordinate installation of identifying devices with completion of covering and painting of surfaces where devices are to be applied.

2. Coordinate installation of identifying devices with locations of access panels and doors.

3. Install identifying devices before installing acoustical ceilings and similar concealment.

PART 2 - PRODUCTS

2.01 COMPONENTS

A. Equipment Labels:

1. Description:

a. Minimum Label Size: Length and width vary for required label content, but not less than 2-1/2 inches by 3/4 inch.

b. Minimum Letter Size: 1/2 inch for name of units for viewing distances up to 72 inches, and proportionately larger lettering for greater viewing distances. If needed, include secondary lettering two-thirds to three-fourths the size of principal lettering.

c. Label Content: Include equipment's Contract Drawing designation or unique equipment number.

2. Materials:

a. Material and Thickness: Multilayer, multicolor, rigid plastic polymer labels for mechanical engraving, 1/8 inch thick, or Stainless steel, 0.025 inch thick, and having predrilled holes for attachment hardware if the label shall be mounted with fasteners.

3. Label Letter and Background Color:

a. Letter Color.

4. Plastic: White.

5. Metal: Black.

6. Background Color:

a. Plastic: Black.

b. Metal: Natural.

7. Label Attachment Options:

a. Fasteners: Stainless-steel rivets or stainless-steel self-tapping screws.

b. Adhesive: Contact-type permanent adhesive, compatible with label and with substrate.

8. Valve Tags:

A. Description:

1) Valve Tags: 1-1/2 inches round, stamped or engraved with 1/4-inch letters for piping system abbreviation and 1/2-inch numbers.

9. Materials:

a. Tag Material: Brass or Stainless steel, 0.032-inch minimum thickness, and having predrilled or stamped holes for attachment hardware.

b. Valve Tag Letter and Background Color:

1) Letter Color: Black.

2) Background Color: Natural.

10. Attachment Method:

a. Fasteners: Brass wire-link or beaded chain.

B. Warning Signs and Labels for Back of House

1. Description:

a. Minimum Label Size: Length and width vary for required label content, but not less than 2-1/2 inches by 3/4 inch.

b. Minimum Letter Size:1/2 inch for viewing distances up to 72 inches, and proportionately larger lettering for greater viewing distances. If needed, include secondary lettering two-thirds to three-fourths the size of principal lettering.

c. Label Content: Include caution and warning information, plus emergency notification instructions.

2. Material:

a. Multilayer, multicolor, plastic labels for mechanical engraving, 1/8 inch thick, and having predrilled holes for attachment hardware:

1) Letter Color: White.

2) Background Color: Red.

3. Performance:

a. Maximum Temperature: Able to withstand temperatures up to 160 degrees F.

4. Sign and Label Attachment Options:

a. Fasteners: Stainless-steel rivets or self-tapping screws.

b. Adhesive: Contact-type permanent adhesive, compatible with label and with substrate.

C. Pipe Labels:

1. Description:

a. Preprinted, color-coded, with lettering indicating service, and showing flow direction.

2. Materials:

a. Pretensioned Pipe Labels: Precoiled, semirigid plastic formed to cover full circumference of pipe and to attach to pipe without fasteners or adhesive. 8 inches and larger pipe, labels shall be adhered with oversized nylon straps.

b. Self-Adhesive Pipe Labels: Printed plastic with contact-type, permanent-adhesive backing.

3. Pipe Label Contents: Include identification of piping system service using same designations or abbreviations as used on contract drawings, and an arrow indication flow direction.

a. Flow-Direction Arrows: integral with piping system service lettering to accommodate both directions or as separate unit on each pipe label to indicate flow direction.

b. Lettering Size: Minimum text height per ANSI/ASME A13.1.

1) Letter Color: Follow ANSI/ASME A13.1 color scheme.

2) Pipe Color: Follow ANSI/ASME A13.1 color scheme.

4. Pipe Label Color Schedule:

a. Domestic Water Piping:

1) Background Color: Green.

2) Letter Color: White.

3) Note type, e.g. “hot water”, “cold water”, “hot water recirc”, etc.

b. Sanitary Waste and Vent Piping:

1) Background Color: Brown.

2) Letter Color: White.

c. Storm Drainage and Rain Leader Piping:

1) Background Color: Black.

2) Letter Color: White.

d. Condensate Piping:

1) Background Color: Grey.

2) Letter Color: White.

PART 3 - EXECUTION

3.01 PREPARATION

A. Clean piping and equipment surfaces of substances that could impair bond of identification devices, including dirt, oil, grease, release agents, and incompatible primers, paints, and encapsulants.

B. Coordinate installation with piping insulation and heat trace installation as required.

3.02 INSTALLATION

A. Equipment Label Installation:

1. Install or permanently fasten labels on each major item of mechanical equipment.

2. Locate equipment labels where accessible and visible.

B. Valve Tag Installation:

1. Install tags on valves and control devices in piping systems, except check valves; valves within factory-fabricated equipment units; shutoff valves; faucets; convenience and lawn- watering hose connections; and similar roughing-in connections of end-use fixtures and units. List tagged valves in a valve schedule.

C. Pipe Label Installation

1. Locate pipe label where piping is exposed or above accessible ceilings in finished spaces; machine rooms; accessible maintenance spaces such as shafts, tunnels, and plenums; and exterior exposed locations as follows:

a. Near each valve and control device.

b. Near each branch connection, excluding short takeoffs for fixtures and terminal units. Where flow pattern is not obvious, mark each pipe at branch.

c. Near penetrations through walls, floors, ceilings, and inaccessible enclosures.

d. At access doors, manholes, and similar access points that permit view of concealed piping.

e. Near major equipment items and other points of origination and termination.

f. Spaced at maximum intervals of 50 feet along each run. Reduce intervals to 25 feet in areas of congested piping and equipment.

g. On piping above removable acoustical ceilings. Omit intermediately spaced labels.

END OF SECTION

SECTION 22 08 00

COMMISSIONING OF PLUMBING

NOTE TO DESIGNER:

SECTIONS WITH BRACKETS. E.G. (TEXT) ARE TO BE MODIFIED OR DELETED IF NOT APPLICABLE. ITALICIZED TEXT PROVIDES INSTRUCTION TO THE DESIGNER TO INCLUDE LANGUAGE ON SPECIFIC TOPIC WHEN APPLICABLE. THE INSTRUCTIONS ARE TO BE DELETED WHEN THE SPECIFICATION IS FINALIZED. LANGUAGE NOT IN BRACKETS IS TO BE USED AS IS WITHOUT MODIFICATION OR WITH AN APPROVED SPECIFICATION MODIFICATION REQUEST.

DESIGNER TO DELETE TEXT ABOVE FOR FINAL SECTION

PART 1 - GENERAL

1.01 SUMMARY

A. Section includes:

1. Requirements for Commissioning process for Plumbing, including:

a. Level 1 commissioning activities for plumbing.

b. Level 2 commissioning activities for plumbing.

c. Support for Level 3 commissioning activities related to plumbing.

d. Support for Level 4 commissioning activities related to plumbing.

B. Refer to the general commissioning requirements as stated elsewhere in the Contract Documents for general commissioning process requirements, including definitions, submittals, scheduling, execution of commissioning activities, and reporting.

1.02 REFERENCES

A. Definitions:

1. See general commissioning requirements as stated elsewhere in the Contract Documents for commissioning definitions.

2. Command: When used in the description of a commissioning activity, command means to use the station human machine interface (HMI) for the building management system (BMS) to control systems, equipment and components.

3. Human Machine Interface (HMI): Equipment, software, and functional programming at the locations shown on the Plans and according to field control system (FCS) as stated elsewhere in the Contract Documents.

4. Systems, Equipment, and Components: Where these terms are used together or separately, they shall mean "as-built" systems, equipment, and components.

1.03 COORDINATION

A. See general commissioning requirements as stated elsewhere in the Contract Documents for general coordination requirements related to commissioning.

1.04 COMMISSIONING ACTIVITIES

A. Furnish labor and material to accomplish building commissioning as referred in the general commissioning requirements as stated elsewhere in the Contract Documents, and herein, including:

1. Provide to the Sound Transit Testing and Commissioning Manager preliminary O&M information for use in developing commissioning test procedures.

2. Assist the Sound Transit Testing and Commissioning Manager in developing commissioning activity procedures and data forms submittals for work specified in this Section.

3. Provide information to the Testing and Commissioning Manager needed for control interface wiring diagrams submittals for the work of this Section.

4. Perform Level 1 and Level 2 commissioning activities specified in this Section, including installation verification, static tests, start-up, component tests, equipment tests, systems tests, and intrastation system interface tests.

5. Provide support for Level 3 commissioning activities, including jointly with the communications system contractor field testing points in the interface terminal strips, being present during level 3 testing with adequate labor and support personnel to adjust equipment and troubleshoot system failures that might arise. When material or equipment provided by this Division is found to be in conflict with specified criteria, adjust or replace said material or equipment, with the assistance of manufacturer as needed.

6. Operate equipment and system during commissioning activities as required by the Testing and Commissioning Manager .

7. Perform and document commissioning tests to verify readiness for commissioning test demonstration. Commissioning tests are specified herein.

8. Correct issues and repeat commissioning tests when results do not meet acceptance criteria.

9. Commissioning Test Demonstrations: Comply with general commissioning requirements, Level 1 and Level 2 commissioning activity commissioning test demonstrations as stated elsewhere in the Contract Documents:

a. Repeat commissioning tests on a sample basis to demonstrate acceptable performance: Level 1 Component, Equipment, and System Commissioning Tests, and for Level 2 Intra-station system interface tests.

b. Record and submit commissioning test demonstration data and issues.

c. Correct issues and repeat commissioning test demonstration when results do not meet Acceptance Criteria.

10. Attend commissioning meetings as requested by the Sound Transit Testing and Commissioning Manager .

11. Report any inconsistencies or issues in system operations or performance.

12. Provide personnel to support commissioning test demonstration specified herein as requested by the Sound Transit Commissioning Coordinator.

13. In the event that a commissioning test demonstration fails, assist in determining the cause of failure. Make corrections as necessary.

B. Cooperate with Sound Transit Testing and Commissioning Manager to make equipment and systems ready for commissioning tests specified herein as early in the construction schedule as possible.

1.05 QUALITY ASSURANCE

A. Coordinate completion of Install Verification forms, by the Quality Control Inspector, as identified in the Contractors Quality Control Inspection and Test Plan.

PART 2 - PRODUCTS

2.01 TEST EQUIPMENT

A. Provide test equipment and instrumentation, including consumable supplies, required to execute commissioning activities. Unless noted otherwise, test equipment and instrumentation remain the property of the Contractor.

B. Provide proprietary test instruments or tools required by the equipment manufacturer. Provide and operate the proprietary test instruments or tools as required for commissioning work.

PART 3 - EXECUTION

3.01 LEVEL 1 COMMISSIONING ACTIVITIES REQUIREMENTS

A. Level 1 commissioning activities scope: Technical requirements for commissioning of plumbing are specified herein.

B. Provide technicians, instrumentation, and tools to perform commissioning activities in accordance with accepted commissioning activity procedures at the direction of the Sound Transit Testing and Commissioning Manager.

C. Scope of plumbing commissioning activities applies to all portions of the plumbing installation described in the test. Where sampling is specified, it applies only to the commissioning test demonstration.

D. Upon approval of product submittals associated with the Technical requirements and the scope of Commissioning develop and submit for approval Install Verification Checklist forms for the quality criteria of the Work specified herein.

E. Preparation:

1. Certify that plumbing systems, equipment, and materials have been completed, calibrated, and started; and are operating in accordance with Contract Documents.

2. Testing Instrumentation: Install measuring instruments and logging devices to record test data in accordance with accepted commissioning test procedures as directed by the Testing and Commissioning Manager.

3. Certify that plumbing instrumentation and control systems have been completed and calibrated; are operating according to the Contract Documents; and that pretest set points have been recorded.

F. Test all operating modes, interlocks, control responses, and responses to abnormal or emergency conditions, and verify proper response of building automation system controllers and sensors.

G. Perform tests using design conditions whenever possible. If tests cannot be completed because of a deficiency outside the scope of the Equipment system, document the deficiency and report it to Sound Transit. After deficiencies are resolved, reschedule tests.

H. Simulated conditions may need to be imposed using an artificial load when it is not practical to test under design conditions. Provide equipment to simulate loads. Set simulated conditions in accordance with accepted commissioning test procedures as directed by the Testing and Commissioning Manager. Document simulated conditions and methods of simulation. After tests, return settings to normal operating conditions.

I. Request approval to alter set points when simulating conditions is not practical. Request approval to alter sensor values with a signal generator when design or simulating conditions and altering set points are not practical.

J. If tests cannot be completed because of a deficiency outside the scope of the plumbing system, document the deficiency and report it to Sound Transit. After deficiencies are resolved, reschedule tests.

K. Where seasonal testing is specified, complete appropriate initial commissioning tests and documentation within the Construction Period. Schedule and execute seasonal tests when specified conditions are expected.

3.02 LEVEL 1 AND LEVEL 2 COMMISSIONING ACTIVITY PROCEDURES

A. Submit Level 1 commissioning activity test procedures and data forms for the following types of commissioning activities, requirements for which are specified herein:

1. Level 1 commissioning activities:

a. Installation verification.

b. Static tests.

c. Start-up procedures.

d. Component tests.

e. Equipment tests.

f. System tests.

2. Level 2 commissioning activities:

a. Intra-station system interface tests.

3.03 LEVEL 1 INSTALLATION VERIFICATION CHECKLIST REQUIREMENTS

A. Installation verification checklist forms shall include the following:

1. Organized to prompt the installer to check off quality criteria for each discrete portion of the Work.

2. Identify the system or features to which the installation verification checklist applies at the top of the form.

3. Section for verification of delivery of accepted materials.

4. Section for condition of materials at delivery.

5. Section for verification that installation meets contract documentation and any special installation instructions by respective manufacture.

6. Space at the end of the form for the installer to print their name, fill in the date, and sign or initial.

7. Space at the end of the form for the Quality Control inspector designated for the scope to review and accept installation verification. QC Inspector must perform Install Verification and verify each element identified in form has been reviewed for conformance with contract documents and in accordance with the Contractors Quality Control Inspection and Test Plan as part of Section 01 45 00 – Quality Assurance / Quality Control.

8. Space to identify the area of work for which the installer is executing the Installation Verification Checklist.

9. Description of the quality criteria as it pertains to the specific work. Include a check-box for each criterion.

10. Example checklists/test forms can be provided upon request.

B. Quality Criteria: Installation verification checklists shall address the following quality criteria:

1. Make and model match accepted submittals, including for motors, full load amperage rating and winding insulation class.

2. Equipment is installed without visible damage.

3. Location is as indicated on drawings.

4. Equipment is accessible for maintenance using safe work practices.

5. There is sufficient space to remove and replace components intact without demolishing other work.

6. Equipment surfaces are clean and free of dust, dirt, oil and other contaminants.

7. Equipment is accessible for adjustment, maintenance, and testing, including replacement of components or the entire assembly.

8. Piping is properly supported and seismically braced.

9. Equipment is installed level, or pitched per manufacturer's requirements.

10. Waste and vent piping is installed with required pitch without reverse pitch.

11. Vibration isolation devices are adjusted to required static deflection and support the equipment level.

12. Before performing a commissioning test, installation verification checklists must be performed and completed by QC inspector designated for the appropriate area specified here in and within the Contractors Quality Control Inspection and Test

Plan as part of Section 01 45 00 – Quality Assurance / Quality Control. Submit completed installation verification checklists for work included in the commissioning test. Erection / Installation / Application

C. Fill out and sign installation verification checklists for plumbing while the Work is being installed. The intent is to fill out and sign the installation verification checklist as work proceeds to improve the quality of the installation. Retain completed installation verification checklists on site for review.

3.04 LEVEL 1 INSTALLATION VERIFICATION

A. Installation Verification checklists are required to include the following, at a minimum:

1. 2208-IV-01 Meters and Gages for Plumbing Piping:

   a. Metal-case, liquid-in-glass thermometers.

   b. Bimetallic-actuated dial thermometers.

   c. Pressure gages.

2. 2208-IV-02 General-duty valves for plumbing piping.

3. 2208-IV-03 Domestic Water Piping:

   a. Domestic water piping.

4. 2208-IV-04 Domestic Water Piping Specialties:

   a. Reduced pressure backflow preventers.

   b. Double check valves.

   c. Water pressure reducing valves – water regulators.

   d. Trap-seal primer valves.

   e. Balancing Valves.

   f. Vibration and seismic controls for plumbing piping and equipment.

5. 2208-IV-05 Sanitary Waste and Vent Piping:

   a. Sanitary and vent piping.

   b. Oil/water separator.

   c. Vibration and seismic controls for plumbing piping and equipment.

6. 2208-IV-06 Pumping Station Piping and Appurtenances:

   a. Drainage pumping station piping and appurtenances.

7. 2208-IV-07 Facility Storm Drainage and Drainage System for Structure Piping:

   a. Storm drainage piping.

   b. Vibration and seismic controls for plumbing piping and equipment.

8. 2208-IV-08 Sump Pumps:

   a. Pumps and pump controls for the wastewater pump station.

9. 2208-IV-09 Electric Domestic Water Heaters:

   a. Electric domestic water heater and controls.

10. 2208-IV-10 Heat Tracing for Plumbing, including:

   a. Heating cable installation, securement, termination.

   b. Heater trace circuit controller.

   c. Remote temperature sensor.

11. 2208-IV-10 Plumbing Fixtures:

   a. Lavatories.

   b. Mop Sinks.

   c. Service sinks.

   d. Urinals.

   e. Water closets.

   f. Drinking Fountains.

   g. Hose Bibbs.

3.05 LEVEL 1 STATIC TESTS

A. Static Test checklists are required to include the following, at a minimum:

1. 2208-ST-01: Water Piping Leak Test:

   a. System/Equipment to be Tested:

      1) Domestic water piping: Refer to the domestic water piping as stated elsewhere in the Contract Documents.

   b. Functions to be Tested:

      1) See “Test domestic water piping” as stated elsewhere in the Contract Documents.

   c. Conditions of the Test:

      1) See “Test domestic water piping” as stated elsewhere in the Contract Documents.

   d. Acceptable Results:

      1) See “Test domestic water piping” as stated elsewhere in the Contract Documents.

2. 2208-ST-02: Sanitary Waste and Vent Pipe Leak Test:

   a. System/Equipment to be Tested:

      1) For waste and vent piping refer to the sanitary waste and vent piping as stated elsewhere in the Contract Documents, including Sanitary Waste Sump and associated access door.

   b. Functions to be Tested:

      1) Leakage under gravity pressure.

c. Conditions of the Test:

1) Test shall be successfully completed before covering piping.

2) Plug openings and fill system with water such that all pipe joints and fittings are subjected to 10 feet of water head pressure. Exception: piping that penetrates the roof shall be filled to fullest height.

3) One hour after the system or section has been filled; visually inspect the piping for evidence of leakage.

4) Include in Static Test Procedures and Data Forms submittal:

a) Leakage testing plan showing how piping will be divided if testing will be performed in sections.

d. Acceptable Results:

1) No visible evidence of leakage.

3. 2208-ST-03: Storm Drainage Pipe Leak Test

a. System/Equipment to be Tested:

1) Storm drainage piping: Comply with facility storm drainage piping as stated elsewhere in the Contract Documents.

b. Functions to be Tested:

1) Leakage under gravity pressure.

c. Conditions of the Test:

1) Test shall be successfully completed before covering piping.

2) Plug openings and fill system with water such that all pipe joints and fittings are subjected to 10 feet of water head pressure. Exception: piping that penetrates the roof shall be filled to fullest height.

3) One hour after the system of section has been filled: visually inspect the piping for evidence of leakage.

4) Include in Static Test Procedures and Data Forms submittal:

a) Leakage testing plan showing how piping will be divided if testing will be performed in sections.

d. Acceptable Results:

1) No visible evidence of leakage.

3.06 LEVEL 1 START-UP

A. Start-up checklists are required to include the following, at a minimum:

1. 2208-SU-01: Domestic Water Heater Start-up:

a. System/Equipment to be Tested:

1) Domestic water heater and associated controls.

b. Functions to be Tested:

1) For installation of water heater refer to the electric domestic water heaters as stated elsewhere in the Contract Documents.

2) Installation and start-up per manufacturer's recommendations.

c. Conditions of the Test:

1) Perform start-up according to manufacturer's procedures. Start-up by manufacturer-authorized personnel. Use manufacturer's data forms to record start-up results.

d. Acceptable Results:

1) Installation and start-up meet the manufacturer's requirements.

2. 2208-SU-02: Submersible Sewage Pumps:

a. System/Equipment to be Tested:

1) Submersible Sewage Pumps and associated pump controls.

b. Functions to be Tested:

1) For installation refer to the sump pumps as stated elsewhere in the Contract Documents.

2) Installation and start-up per manufacturer's recommendations.

c. Conditions of the Test:

1) Perform start-up according to manufacturer's procedures. Start-up by manufacturer-authorized personnel. Use manufacturer's data forms to record start-up results.

d. Acceptable Results:

1) Installation and start-up meet the manufacturer's requirements.

3. 2208-SU-03: Trap Seal Primers:

a. System/Equipment to be Tested:

1) All Trap Seal Primers and associated controls.

b. Functions to be Tested:

1) Installation per trap seal primers as stated elsewhere in the Contract Documents.

2) Installation and start-up per manufacturer's recommendations.

c. Conditions of the Test:

1) Perform start-up according to manufacturer's procedures. Start-up by manufacturer-authorized personnel. Use manufacturer's data forms to record start-up results.

d. Acceptable Results:

1) Installation and start-up meet the manufacturer's requirements.

3.07 LEVEL 1 COMPONENT TESTS

A. Component Test checklists are required to include the following, at a minimum:

1. 2208-C-01: Water Pressure Gauge Calibration:

a. System/Equipment to be Tested:

1) For fluid pressure gauges in plumbing systems refer to the meters and gages for plumbing piping requirements as stated elsewhere in the Contract Documents.

b. Functions to be Tested:

1) Accuracy of fluid pressure indication.

c. Conditions of the Test:

1) Systems in which pressure gauges are installed shall operate at their normal flow rates and pressures during the test.

a) Subject pressure gauge to pressure at or near the high pressure at which the system is scheduled to operate. Subject calibration instrument to the same pressure. Record pressures indicated by both instruments.

b) Subject pressure gauge to pressure at or near the low pressure at which the system is scheduled to operate. Subject calibration instrument to the same pressure. Record pressures indicated by both instruments.

c) With system pressure stable, install calibration instrument in place of the pressure gauge. Record calibration instrument pressure. Install the pressure gauge in the same location. Record pressure gauge pressure.

d. Acceptable Results:

1) Pressure gauge pressures recorded at each stage shall be within plus or minus 2.0 percent of calibration instrument pressures.

2. 2208-C-02: Trap Primers:

a. System/Equipment to be Tested:

1) For trap seal primer valve stations and controls refer to the domestic water piping specialties requirements as stated elsewhere in the Contract Documents.

b. Functions to be Tested:

1) Priming of floor drain traps.

2) Control timer operation.

c. Conditions of the Test:

1) Operate each trap primer station by activating the override. Observe and record results at each primed drain.

2) Observe operation of each trap primer station timer.

d. Acceptable Results:

1) Each primed floor drain trap receives water from the trap primer when the override is actuated.

2) Trap primer valve opens for 10 seconds once in 24 hours.

3. 2208-C-03: Backflow Preventers:

a. System/Equipment to be Tested:

1) For reduced-pressure-principle backflow preventers in plumbing systems refer to the domestic water piping specialties requirements as stated elsewhere in the Contract Documents.

2) For double-check backflow prevention assemblies in plumbing systems refer to the domestic water piping specialties requirements as stated elsewhere in the Contract Documents.

b. Functions to be Tested:

1) Backflow assembly functions mandated by the authority having jurisdiction (AHJ).

c. Conditions of the Test:

1) Perform field test of backflow preventers in accordance with requirements of the local AHJ.

d. Acceptable Results:

1) Backflow preventer functions as required by AHJ.

4. 2208-C-04: Actuated Drain Valves:

a. System/Equipment to be Tested:

1) For all pumping station actuated drain valves refer to the pumping station piping and appurtenances as stated elsewhere in the Contract Documents.

b. Functions to be Tested:

1) Opening and closing of valves.

c. Conditions of the Test:

1) Command valve closed. Fill force main with water.

2) Command valve open for 10 seconds.

3) Command valve closed.

d. Acceptable Results:

1) Valve closes and does not leak when force main is filled.

2) Valve opens and water drains freely.

3) Valve closes and does not leak.

5. 2208-C-05: Water Pressure-Reducing Valves:

a. System/Equipment to be Tested:

1) For water regulators in plumbing systems refer to the domestic water piping specialties requirements as stated elsewhere in the Contract Documents.

b. Functions to be Tested:

1) Control of outlet pressure under varying flows.

c. Conditions of the Test: During the test, ensure that only test personnel operate water valves in the system.

1) With all valves closed, observe water pressure downstream of regulators.

2) Open one lavatory valve. Observe water pressure downstream of regulators for one minute.

3) Open sufficient valves to increase flow to approximately 10 percent of design flow. Observe water pressure downstream of regulators for one minute.

4) Open sufficient valves to increase flow to approximately 50 percent of design flow. Observe water pressure downstream of regulators for one minute.

5) Continue opening valves to increase flow to approximately 100 percent of design flow. Observe water pressure downstream of regulators for one (1) minute.

d. Acceptable Results:

1) For all conditions, downstream pressure is stable within plus or minus 2 pounds per square inch of setpoint (60 pounds per square inch initially).

6. 2208-C-06: Oil Separators:

a. System/Equipment to be Tested:

1) Oil Separators in plumbing systems; refer to sanitary waste and vent piping requirements as stated elsewhere in the Contract Documents.

b. Functions to be Tested:

1) Ability to capture and prevent the migration of oil past the interceptor.

c. Conditions of the Test: During the test, ensure that only test personnel operate the components of the interceptor.

1) Verify that the interceptor is provided with all baffles and components required for correct operation.

2) Verify that the interceptor is level to within the manufacturer's tolerances for proper operation.

3) Introduce a small amount of oil into the inlet side of the interceptor while waste water is actively flowing through it.

d. Acceptable Results:

1) With water flowing through the unit, oil remains trapped in the containment chamber without passing through to the exit side of the unit.

3.08 LEVEL 1 EQUIPMENT TESTS

A. Equipment Test checklists are required to include the following, at a minimum:

1. 2208-E-01: Sump Pump Controller:

a. System/Equipment to be Tested:

1) For sanitary sewage pumps and associated pump controls for sanitary sewage pump stations refer to the sump pumps as stated elsewhere in the Contract Documents.

b. Functions to be Tested:

1) Pump controller digital point LED display.

2) Pump controller analog point display.

3) Pump controller operator interface display.

c. Conditions of the Test:

1) Switch the status of each digital point and observe the corresponding LED display.

2) Vary the input or output value of each analog point and observe the corresponding display.

3) Demonstrate dynamic display of process parameters, process equipment and all associated controlled and monitored process variables being monitored by the PLC processor.

4) Modify a randomly selected sample of ten process parameters being monitored by the PLC processor. Restore original values at the completion of the step.

d. Acceptable Results:

1) LED display is present and correctly reflects status of digital points.

2) Display is present and correctly reflects value of analog points.

3) Process parameters, process equipment and all associated controlled and monitored process variables display correct dynamic values.

4) Selected parameters are capable of being changed and saved to memory.

2. 2208-E-02: Sump Pump Operation:

a. System/Equipment to be Tested:

1) All sanitary sewage pumps and associated pump controls for sanitary sewage pump stations, refer to sump pumps requirements as stated elsewhere in the Contract Documents.

b. Functions to be Tested:

1) Sump pump control and alarm functions.

c. Conditions of the Test:

1) Determine water volume in sump between high level alarm signal level and low level cutoff level.

2) With all pumps disabled, verify rising water levels at which each pump is commanded to start, and the level at which the high level alarm signal is initiated at the pump control panel.

3) With one pump enabled, verify falling water levels at which the high level alarm signal is cancelled and the level at which each pump is commanded to stop.

4) Fill to normal “pump on” elevation with all pumps enabled.

5) Repeat and fill to normal “pump on” elevation with all pumps enabled.

6) Fill to high water level while both pumps are disabled and then re-enable the pumps to operate.

7) Turn the electrical disconnect off to one of the pumps.

8) Loss of building normal electrical power.

d. Acceptable Results:

1) Switch and alarm action occurs within plus or minus 1.0 inch of scheduled level.

2) Switch and alarm action occurs within plus or minus 1.0 inch of scheduled level.

3) The pump controller automatically changes the designation of the lead and lag pumps (automatic alternation of lead pump) and the newly-designated lead pump turns on and then automatically shuts off at the “pump off” elevation.

4) With water at high water level, and pumps re-enabled, both pumps start and then stop when the water level reaches the “pump off” elevation.

5) The pump that still has electrical service to its controller operates continues to operate correctly when the other pump has lost electrical service.

6) The sump pumps continue to operate under emergency power with no operator intervention or nuisance alarms when pumps switch between normal to emergency power and then back again from emergency to normal power.

3. 2208-E-03: Sump Pump Removal and Reinstallation:

a. System/Equipment to be Tested:

1) For sanitary sewage pumps and associated pump controls for sanitary sewage pump stations refer to the sump pumps as stated elsewhere in the Contract Documents.

b. Functions to be Tested:

1) Ability to remove sump pump from sump without entering sump.

2) Ability to reinstall sump pump in sump without entering sump.

c. Conditions of the Test: Prerequisite:

1) Following manufacturer's instructions, remove sump pump from sump without entering sump.

2) Following manufacturer's instructions, reinstall sump pump in sump without entering sump.

3) Restore automatic control equipment and functions to normal operating condition. Fill the sump with water until the pump starts automatically. Measure the pump-down time.

d. Acceptable Results:

1) Pump removal, using manufacturer's recommended tools and methods, proceeds without incident.

2) Pump reinstallation, using manufacturer's recommended tools and methods, proceeds without incident.

3) Pump starts and stops automatically. Pump runs normally. Pump-down time is the same as noted during Level 1 test 2208-E-02, Sump Pump Operation

4. 2208-E-04: Heat Tracing Control for Plumbing:

a. System/equipment to be tested:

1) Self-Regulating, Parallel-Resistance Heating Cables.

2) Heater Trace Circuit Controller.

b. Functions to be tested:

1) Response to ambient temperature below freeze protection setpoint.

2) Heating cable fault alarm.

c. Conditions of the test:

1) Subject temperature sensor to temperature approximately 3 degrees Fahrenheit above freeze protection setpoint (initial setpoint 41 degrees Fahrenheit). Monitor sensed temperature with a calibration-grade thermometer. Gradually change setpoint or sensed temperature until freeze protection circuit is energized.

2) Simulate an electrical fault on the heating cable.

d. Acceptance Criteria:

1) Freeze protection circuit is energized at setpoint temperature minus 2 degrees Fahrenheit.

2) Heater trace circuit controller initiates an alarm of cable fault. Alarm is correctly reported at BMS panel.

5. 2208-E-05: Trap Seal Primers:

a. System/Equipment to be Tested:

1) All Trap Seal Primers and associated controls.

b. Functions to be Tested:

1) Installation per trap seal primers as stated elsewhere in the Contract Documents.

2) Installation and start-up per manufacturer's recommendations.

c. Conditions of the Test:

1) Perform start-up according to manufacturer's procedures. Start-up by manufacturer-authorized personnel. Use manufacturer's data forms to record start-up results.

d. Acceptable Results:

1) Installation and start-up meet the manufacturer's requirements.

6. 2208-E-06: Domestic Water Heaters:

a. System/Equipment to be Tested:

1) Domestic water heater and associated controls.

b. Functions to be Tested:

1) For installation of water heater refer to the electric domestic water heaters as stated elsewhere in the Contract Documents.

2) Installation and start-up per manufacturer's recommendations.

c. Conditions of the Test:

1) Perform start-up according to manufacturer's procedures. Start-up by manufacturer-authorized personnel. Use manufacturer's data forms to record start-up results.

d. Acceptable Results:

1) Installation and start-up meet the manufacturer's requirements.

3.09 LEVEL 1 SYSTEM TESTS

A. System Test checklists are required to include the following, at a minimum:

1. 2208-S-01: Sanitary Sewage Pumps: System:

a. System/Equipment to be Tested:

1) All Track Drainage Pumps and associated pump controls for the sanitary sewage pump station and sump pumps.

b. Functions to be Tested:

1) Sequence of operation.

c. Conditions of the Test: Start the test with all controls in normal, automatic control, and all pumps enabled. Pumps may be temporarily disabled while filling the sump to the required level.

1) Sump fluid level below the “Low Level Alarm” level. Lead pump: ”Off”.

2) Sump fluid level above the “Low Level Alarm” level and below the first pump “On” level.

3) Disconnect communication link with BMS. Sump fluid level above the first pump “On” level and below the second pump “On” level.

4) Sump fluid level above the second pump “On” level and below the “High Water Alarm” level.

5) Restore communication link with BMS. Sump fluid level above the “High Water Alarm” level.

6) Verify response to failure of a pump by failing each pump in turn while it is operating as the lead pump. Restore each pump to normal control after verifying response to failure and before failing the next pump.

d. Acceptable Results:

1) “Low Level Alarm” is activated and communicated to the BMS. All pumps are “Off.”

2) “Low Level Alarm” is cleared and communicated to the BMS. All pumps are “Off.”

3) Loss of communication with BMS does not impair local control. Lead pump is “On,” and “Stops” after water level falls below the “All Pumps Off” level. The lead pump is ”Off”.

4) Lead pump, and lag pump are “On,” and “Stop” after water level falls below the “All Pumps Off” level. The lead pump is ”Off”.

5) Restoration of communication link with BMS does not impair control. The “High Water Alarm” is activated and communicated to the BMS. Lead pump and lag pump are “On,” and “Stop” after water level falls below the “All Pumps Off” level. The “High Water Alarm” is cleared and communicated to the BMS after water level falls below “High Water Alarm” level. The lead pump is ”Off”.

6) When a pump fails, the next pump in the operating sequence shall start and a common alarm shall be annunciated at the Operations Control Center.

2. 2208-S-02: Sanitary Sewage Pump – System:

a. System/Equipment to be Tested:

1) For track drainage pumps, and associated pump controls for the sanitary sewage pump station, refer to the sump pumps as stated elsewhere in the Contract Documents.

b. Functions to be Tested:

1) Sequence of operation.

c. Conditions of the Test: Start the test with all controls in normal, automatic control, and pump enabled. Pump may be temporarily disabled while filling the sump to the required level.

1) Sump fluid level below the “Low Level Alarm” level.

2) Sump fluid level above the “Low Level Alarm” level and below pump “On” level.

3) Disconnect communication link with BMS. Sump fluid level above pump “On” level and below the “High Water Alarm” level.

4) Restore communication link with BMS. Sump fluid level above the “High Water Alarm” level.

5) Verify response to failure of pump by failing pump while it is operating. Restore pump to normal control after verifying response to failure.

d. Acceptable Results:

1) “Low Level Alarm” is activated and communicated to the BMS. Pump is “Off.”

2) “Low Level Alarm” is cleared and communicated to the BMS. Pump is “Off.”

3) Loss of communication with BMS does not impair local control. Pump is “On,” and “Stops” after water level falls below the “Pump Off” level.

4) Restoration of communication link with BMS does not impair control. The “High Water Alarm” is activated and communicated to the BMS. Pump is “On,” and “Stops” after water level falls below the “Pump Off” level. The “High Water Alarm” is cleared and communicated to the BMS after water level falls below “High Water Alarm” level.

5) When pump fails, a common alarm shall be annunciated at the Operations Control Center.

3.10 LEVEL 1 AND LEVEL 2 TEST REQUIREMENTS MATRIX

	2208-IV-0X	**2208-ST-0X**	**2208-SU-0X**	**2208-C-0X**	**2208-E-0X**	**2208-S-0X**
Meter and Gauges for plumbing piping	X					
General-duty valves for plumbing piping	X					
Domestic Water Piping	X					
Domestic water specialties	X					
	X					
Vibration and seismic controls for plumbing piping and equipment	X					
Sanitary waste and vent piping	X					
Sanitary waste and vent piping specialties	X					

	2208-IV-0X	2208-ST-0X	2208-SU-0X	2208-C-0X	2208-E-0X	2208-S-0X
Pumping station piping and appurtenances	X					
Drainage system for structures	X					
	X					
Facility storm drainage piping	X					
Storm drainage piping specialties	X					
Sump pumps	X					
Electric domestic water heaters	X					
Heat tracing for plumbing piping	X					
Plumbing fixtures	X					
Water piping leak test		X				
Sanitary Waste and Vent Pipe Leak Test		X				
Storm Drainage Pipe Leak Test		X				
Domestic water heater start-up			X			
Submersible Sewage Pumps			X			
Trap Seal Primers			X			
Water Pressure Gauge Calibration				X		
Trap Primers				X		
Backflow Preventers				X		
Actuated Drain Valves				X		
Water Pressure Reducing Valves				X		
Oil Separators				X		
Sump Pump Controller					X	
Sump Pump Operation					X	
Sump Pump Removal and Reinstallation					X	
Heat Tracing Control for Plumbing					X	
Trap Seal Primers					X	
Domestic Water Heaters					X	
Sanitary Sewage Pumps: System						X
Sanitary Sewage Pump: System						X

[DESIGNER: ADD OR MODIFY MATRIX AS NECESSARY BASED ON TESTS ADDED OR MODIFIED ABOVE DEPENDING UPON THE DESIGN FOR PLUMBING SYSTEM]

END OF SECTION

EXHIBITS – (On Proceeding Pages)

1. EXHIBIT A – Sample Test Forms

EXHIBIT A:

SAMPLE TEST FORMS

Test No. xxx-2208-IV-xx.xx

Project Name: xxxxxx xxxxx Sump Pumps

Test Rev 1.0 – 12/01/2023 Specification Section 22 14 29

☐ First Test ☐ PASS Test Date: _____

☐ Repeat Test ☐ FAIL

OBJECTIVES:

A. Verify that the domestic booster pump is installed to code, manufacturer's instructions, and design document requirements.

EQUIPMENT TO BE TESTED:

Equipment ID	Description
SP-1	
SP-2/SP-3	

REFERENCE DOCUMENTS:

Document
Drawings:
Specification Sections:
Submittals:

TEST PRE-REQUISITES:

Activity	Notes	Completed?	
		Yes	No
None		☐	☐
Notes: (1)			

MINIMUM PARTICIPANTS:

Participant	Notes	Required?	
		Yes	No
Installing contractor		☒	☐
Sound Transit site quality inspector		☐	☐

Notes:
(1)

REQUIRED INSTRUMENTATION AND EQUIPMENT:

Instrument or Equipment						Notes	Provided Instrumentation meets Requirements?	
Type or Sensed Parameter	Manufacturer	Model	Range	Accuracy	Calibration Date/ Next Cal. Due		Yes	No
None				±	/		☐	☐
							☐	☐

Notes:

(1)

CONDITIONS AT TIME OF TESTING:

AREA OF WORK:

Area in Which Work will be Conducted:
Notes: (1)

ISSUES DISCOVERED AND PROPOSED RESOLUTIONS:

No.	Issue	Proposed Resolution

Notes:
(1)

SIGNATURES:

Company	Printed Name	Signature	Date
Installing Contractor:			
Quality Control:			
Other Witness:			

END OF EXHIBITS

SECTION 22 13 16

SANITARY WASTE AND VENT PIPING

PART 1 - GENERAL

1.01 SUMMARY

A. Section includes:

1. Requirements for the following soil and waste, sanitary drainage, and vent piping inside the building:

a. Pipe, tube, and fittings.

b. Special pipe fittings.

1.02 REFERENCES

A. This section incorporates by reference the latest revisions of the following documents:

1. ASTM International (ASTM):

a. ASTM A53 Standard Specification for Pipe, Steel, Black and Hot-Dipped, Zinc-Coated, Welded and Seamless.

b. ASTM A74 Standard Specification for Cast Iron Soil Pipe and Fittings.

c. ASTM A106 Standard Specification for Seamless Carbon Steel Pipe for High-Temperature Service.

d. ASTM A733 Standard Specification for Welded and Seamless Carbon Steel and Austenitic Stainless Steel Pipe Nipples.

e. ASTM A888 Standard Specification for Hubless Cast Iron Soil Pipe and Fittings for Sanitary and Storm Drain, Waste, and Vent Piping Applications.

f. ASTM B32 Standard Specification for Solder Metal.

g. ASTM B306 Standard Specification for Copper Drainage Tube (DWV).

h. ASTM B813 Standard Specification for Liquid and Paste Fluxes for Soldering of Copper and Copper Alloy Tube.

i. ASTM B828 Standard Practice for Making Capillary Joints by Soldering of Copper and Copper Alloy Tube and Fittings.

j. ASTM C564 Standard Specification for Rubber Gaskets for Cast Iron Soil Pipe and Fittings.

k. ASTM C1277 Standard Specification for Shielded Couplings Joining Hubless Cast Iron Soil Pipe and Fittings.

2. American Society of Sanitary Engineering (ASSE):

a. ASSE 1043 Performance Requirements for Cast Iron Sanitary Drainage Systems.

3. Manufacturers Standardization Society (MSS):

a. MSS SP-69 Pipe Hangers and Supports – Selection and Applications.

1.03 SUBMITTALS

A. Submit:

1. Shop Drawings.

2. Inspection Reports.

3. Field quality-control inspection and test reports.

1.04 QUALITY ASSURANCE

A. Piping materials shall bear label, stamp, or other markings of an independent testing laboratory.

PART 2 - PRODUCTS

2.01 PIPING MATERIALS

A. Hub-and-Spigot, Cast-Iron Pipe and Fittings: ASTM A74, Service class:

1. Gaskets: ASTM C564, rubber.

B. Hubless Cast-Iron Pipe and Fittings: ASTM A888 or CISPI 301:

1. Stack Fittings: ASME B16.45 or ASSE 1043, hubless, cast-iron aerator and deaerator drainage fittings.

2. Shielded Couplings: ASTM C1277 or CISPI 301 assembly of metal shield or housing, corrosion-resistant fasteners, and rubber sleeve with integral, center pipe stop:

a. Heavy-Duty, Shielded, Stainless-Steel Couplings: With stainless-steel shield, stainless-steel bands and tightening devices, and ASTM C564, rubber sleeve.

C. Steel Pipe: ASTM A53/A53M, Type E or S, Grade A or B, Schedule 40, galvanized. Include ends matching joining method:

1. Drainage Fittings: ASME B16.12, galvanized, threaded, cast-iron drainage pattern.

2. Pressure Fittings:

a. Steel Pipe Nipples: ASTM A733, made of ASTM A53/A53M or.

b. ASTM A106, Schedule 40, galvanized, seamless steel pipe; include ends matching joining method.

c. Malleable-Iron Unions: ASME B16.39; Class 150; hexagonal-stock body with ball-and-socket, metal-to-metal, bronze seating surface; and female threaded ends.

d. Gray-Iron, Threaded Fittings: ASME B16.4, Class 125, galvanized, standard pattern.

e. Cast-Iron Flanges: ASME B16.1, Class 125.

f. Cast-Iron, Flanged Fittings: ASME B16.1, Class 125, galvanized.

D. Copper DWV Tube: ASTM B306, drainage tube, drawn temper:

1. Copper Drainage Fittings: ASME B16.23, cast copper or ASME B16.29, wrought-copper, solder-joint fittings.

PART 3 - EXECUTION

3.01 APPLICATION

A. Special pipe fittings with pressure ratings at least equal to piping pressure ratings may be used in applications below, unless otherwise indicated.

B. Flanges and unions may be used on aboveground pressure piping, unless otherwise indicated.

C. Aboveground, soil, waste, and vent piping shall be any of the following: Hubless cast-iron soil pipe and fittings; heavy-duty shielded, stainless-steel couplings; and hubless- coupling joints:

1. Underground, soil, waste, and vent piping NPS 4 and smaller shall be any of the following:

a. Service class, hub-and-spigot, cast-iron soil pipe and fittings; gaskets; and compression joints.

b. Hubless cast-iron soil pipe and fittings; heavy-duty shielded, stainless-steel couplings; and hubless-coupling joints.

D. Underground, soil and waste piping NPS 5 and larger shall be any of the following:

1. Service class, cast-iron soil pipe and fittings; gaskets; and compression joints.

2. Hubless cast-iron soil pipe and fittings; heavy-duty shielded, stainless-steel couplings; and hubless-coupling joints.

3.02 INSTALLATION

A. Piping Installation:

1. Install cleanouts at grade and extend to where building sanitary drains connect to building sanitary sewers.

2. Install cast-iron sleeve with water stop and mechanical sleeve seal at each service pipe penetration through foundation wall. Select number of interlocking rubber links required to make installation watertight. Sleeves and mechanical sleeve seals, and wall sleeves shall apply. Install cast-iron soil piping according to CISPI's "Cast Iron Soil Pipe and Fittings Handbook," Chapter IV, "Installation of Cast Iron Soil Pipe and Fittings."

3. Make changes in direction for soil and waste drainage and vent piping using appropriate branches, bends, and long-sweep bends. Sanitary tees and short-sweep 1/4 bends may be used on vertical stacks if change in direction of flow is from horizontal to vertical. Use long-turn, double Y-branch and 1/8-bend fittings if two fixtures are installed back to back or side by side with common drain pipe. Straight tees, elbows, and crosses may be used on vent lines. Do not change direction of flow more than 90 degrees. Use proper size of standard increasers and reducers if pipes of different sizes are connected. Reducing size of drainage piping in direction of flow is prohibited.

4. Lay buried building drainage piping beginning at low point of each system. Install true to grades and alignment indicated, with unbroken continuity of invert. Place hub ends of piping upstream. Install required gaskets according to manufacturer's written instructions for use of lubricants, cements, and other installation requirements. Maintain swab in piping and pull past each joint as completed.

5. Install soil and waste drainage and vent piping at the following minimum slopes, unless otherwise indicated:

    a. Building Sanitary Drain: 2 percent downward in direction of flow for piping NPS 4 and smaller; for pipe larger than NPS 4 1 percent downward in direction of flow for piping is allowed.

    b. Horizontal Sanitary Drainage Piping: 2 percent downward in direction of flow.

    c. Vent piping: 2 percent down toward vertical fixture vent or toward vent stack unless indicated otherwise.

6. Sleeves are not required for cast iron soil piping passing through concrete slabs-on-grade if slab is without membrane waterproofing.

7. Do not enclose, cover, or put piping into operation until it is inspected and approved by authorities having jurisdiction.

B. Joint Construction:

1. Cast-Iron, Soil-Piping Joints: Make joints according to CISPI's "Cast Iron Soil Pipe and Fittings Handbook," Chapter IV, "Installation of Cast Iron Soil Pipe and Fittings."

2. Gasketed Joints: Make with rubber gasket matching class of pipe and fittings.

3. Hubless Joints: Make with rubber gasket and sleeve or clamp.

4. Soldered Joints: Use ASTM B813, water-flushable, lead-free flux; ASTM B32, lead-free- alloy solder; and ASTM B828 procedure, unless otherwise indicated.

C. Valve Installation:

1. Shutoff Valves: Install shutoff valve on each sewage pump discharge.

    a. Use gate or full-port ball valve for piping NPS 2 and smaller.

    b. Use gate valve for piping NPS 2-1/2 and larger.

2. Check Valves: Install swing check valve, downstream from shutoff valve, on each sewage pump discharge.

3. Backwater Valves: Install backwater valves in piping subject to sewage backflow:

a. Horizontal Piping: Horizontal backwater valves. Use normally closed type, unless otherwise indicated.

b. Floor Drains: Drain outlet backwater valves, unless drain has integral backwater valve.

c. Install backwater valves in accessible locations.

D. Hanger and Support Installation:

1. Pipe Hangers:

a. Vertical Piping MSS Type 8 or Type 42, clamps.

b. Individual, Straight, Horizontal Piping Runs: According to the following:

1) 100 Feet and Less: MSS Type 1, adjustable, steel clevis hangers.

2) Longer than 100 Feet: MSS Type 43, adjustable roller hangers.

3) Longer than 100 Feet, if indicated: MSS Type 49, spring cushion rolls.

2. Install supports as required.

3. Support vertical piping and tubing at base and at each floor.

4. Rod diameter may be reduced one size for double-rod hangers, with 3/8-inch minimum rods.

5. Install hangers for cast-iron soil piping, steel piping and copper tubing with the following maximum horizontal spacing and minimum rod diameters as specified in UPC:

a. Install supports for vertical cast-iron soil piping, steel piping and copper piping as specified in UPC.

6. Support piping and tubing not listed above according to MSS SP-69 and manufacturer's written instructions and meet the requirements of UPC.

E. Connections:

1. Connect soil and waste piping to exterior sanitary sewerage piping. Use transition fitting to join dissimilar piping materials.

2. Connect drainage and vent piping to the following:

a. Plumbing Fixtures: Connect drainage piping in sizes indicated, but not smaller than required by plumbing code.

b. Equipment: Connect atmospheric vent piping in sizes indicated, but not smaller than required by authorities having jurisdiction.

c. Plumbing Specialties: Connect drainage and vent piping in sizes indicated, but not smaller than required by plumbing code and specification section of Sanitary Waste Piping Specialties.

d. Equipment: Connect drainage piping as indicated. Provide shutoff valve, if indicated, and union for each connection. Use flanges instead of unions for connections NPS 2-1/2 and larger.

3.03 FIELD QUALITY CONTROL

A. During installation, notify Resident Engineer at least 24 hours before inspection shall be performed. Perform tests specified below in presence of Resident Engineer and the Authority having Jurisdiction (AHJ):

1. Roughing-in Inspection: Arrange for inspection of piping before concealing or closing-in after roughing-in and before setting fixtures.

2. Final Inspection: Arrange for final inspection by Resident Engineer and the AHJ to observe tests specified below and to ensure compliance with requirements.

3. Installation Verification shall apply prior to and before commissioning. Refer to commissioning of plumbing in other sections for verification documentation.

B. Reinspection: If Resident Engineer and the AHJ find that piping will not pass test or inspection, make required corrections and arrange for reinspection.

C. Reports: Prepare inspection reports and have them signed by Resident Engineer and the AHJ.

D. Test sanitary drainage and vent piping according to manufacturers' procedures of Resident Engineer and the AHJ:

1. Test installed drainage lines and equipment according to Section 22 08 00 - Commissioning of Plumbing. Provide and dispose of water required for testing.

2. Prepare reports for tests and required corrective action.

E. Components and installation shall be capable of withstanding the following minimum working pressure, unless otherwise indicated:

1. Soil, Waste, and Vent Piping: 10-foot head of water.

3.04 CLEANING

A. Clean interior of piping. Remove dirt and debris as work progresses.

B. Protect drains during remainder of construction period to avoid clogging with dirt and debris and to prevent damage from traffic and construction work.

C. Place plugs in ends of uncompleted piping at end of day and when work stops.

3.05 TRAINING

A. Engage a factory-authorized service representative to train Sound Transit's maintenance personnel to adjust, operate, and maintain Sanitary Waste and Vent Piping systems and equipment See Section 22 08 00 - Commissioning of Plumbing for commissioning requirements pertaining to the work of this section.

B. Engage a factory-authorized service representative to train Sound Transit's maintenance personnel to adjust, operate, and maintain Sanitary Waste and Vent Piping systems and equipment. See commissioning of plumbing in other sections for commissioning requirements pertaining to the work of this Section.

END OF SECTION

SECTION 23 05 00

COMMON WORK RESULTS FOR HVAC

PART 1 - GENERAL

1.01 SUMMARY

A. Section includes:

1. Requirements for the following:

a. Piping materials and installation instructions common to most piping systems.

b. Dielectric fittings.

c. Mechanical sleeve seals.

d. Sleeves.

e. Escutcheons.

f. Grout.

g. Equipment installation requirements common to equipment sections.

h. Concrete bases.

i. Supports and anchorages.

B. Any LEED execution requirements for HVAC are in accordance with the LEED certification requirements (including the LEED specifications matrix requirements) as stated elsewhere in the Contract Documents.

1.02 REFERENCES

A. This Section incorporates by reference the latest revisions of the following documents:

1. ASME International (ASME):

a. ASME B1.20.1 Pipe Threads, General Purpose (Inch).

b. ASME B16.21 Nonmetallic Flat Gaskets for Pipe Flanges.

c. ASME B31.1 Power Piping.

2. ASTM International (ASTM):

a. ASTM A53/A53M Standard Specification for Pipe, Steel, Black and Hot-Dipped, Zinc-Coated, Welded and Seamless.

b. ASTM B32 Standard Specification for Solder Metal.

c. ASTM B813 Standard Specification for Liquid and Paste Fluxes for Soldering of Copper and Copper Alloy Tube.

d. ASTM B828 Standard Practice for Making Capillary Joints by Soldering of Copper and Copper Alloy Tube and Fittings.

e. ASTM C1107/C1107M Standard Specification for Packaged Dry, Hydraulic-Cement Grout (Nonshrink).

f. ASTM D1785 Standard Specification for Poly(Vinyl Chloride) (PVC) Plastic Pipe, Schedules 40, 80 and 120.

g. ASTM D2564 Standard Specification for Solvent Cements of Poly(Vinyl Chloride) (PVC) Plastic Piping Systems.

h. ASTM D2657 Standard Practice for Heat Fusion Joining of Polyolefin Pipe and Fittings.

i. ASTM D2672 Standard Specification for Joints for IPS PVC Pipe Using Solvent Cement.

j. ASTM D2846/D2846M Standard Specification for Chlorinated Poly(Vinyl Chloride) (CPVC) Plastic Hot- and Cold-Water Distribution Systems.

k. ASTM D2855 Standard Practice for Making Solvent-Cemented Joints with Poly(Vinyl Chloride) (PVC) Pipe and Fittings.

l. ASTM D3139 Standard Specification for Joints for Plastic Pressure Pipes Using Flexible Elastomeric Seals.

m. ASTM D3212 Standard Specification for Joints for Drain and Sewer Plastic Pipes Using Flexible Elastomeric Seals.

n. ASTM F402 Standard Practice for Safe Handling of Solvent Cements, Primers, and Cleaners Used for Joining Thermoplastic Pipe and Fittings.

o. ASTM F493 Standard Specification for Solvent Cements for Poly(Vinyl Chloride) (PVC) Plastic Pipe and Fittings.

p. ASTM F656 Standard Specification for Primers for Use in Solvent Cement Joints of Poly(Vinyl Chloride) (PVC) Plastic Pipe and Fittings.

3. American Welding Society (AWS):

a. AWS A5.8/A5.8M Specification for Filler Metals for Brazing and Braze Welding.

b. AWS D1.1/D1.1M Structural Welding Code – Steel.

c. AWS D10.12M/D10.12 Guide for Welding Mild Steel Pipe.

4. Washington Association of Building Officials (WABO):

a. WABO Welder and Welding Operator Performance Qualification Standard (No. 27-13).

B. Definitions:

1. Finished Spaces: Spaces other than mechanical and electrical equipment rooms, furred spaces, pipe and duct chases, unheated spaces immediately below roof, spaces above ceilings, unexcavated spaces, and crawlspaces.

2. Exposed, Interior Installations: Exposed to view indoors. Examples include finished occupied spaces and mechanical equipment rooms.

3. Exposed, Exterior Installations: Exposed to view outdoors or subject to outdoor ambient temperatures and weather conditions. Examples include rooftop locations.

4. Concealed, Interior Installations: Concealed from view and protected from physical contact by building occupants. Examples include above ceilings and chases.

5. Concealed, Exterior Installations: Concealed from view and protected from weather conditions and physical contact by building occupants but subject to outdoor ambient temperatures. Examples include installations within unheated shelters.

1.03 SUBMITTALS

A. Submit the following:

1. Sustainability Submittals in accordance with the LEED certification requirements (including the LEED specifications matrix requirements), and Sound Transit Sustainability Checklist as stated elsewhere in the Contract Documents.:

a. Low Emitting Materials - Product data for all adhesives, sealants, paints and coatings applied within the weather barrier indicating:

1) Product meets California Department of Public Health (CDPH) standard method v1.1-2010 testing requirements.

2) VOC content in g/L meeting SCAQMD Rules #1168 (adhesives and sealants) and #1113 (paints and coatings) VOC requirements.

3) Amount of product to be used within the weather barrier.

B. Transmit the following:

1. Welding certificates.

2. Shop drawings.

1.04 QUALITY ASSURANCE

A. Materials and Work:

1. Materials and equipment required for the work shall be new and shall be furnished, delivered, erected, installed, connected, and finished in every detail; and shall be selected and arranged to fit properly into the building spaces. Where no specific kind or quality of material is given, an article as approved by the Resident Engineer shall be provided.

2. Furnish the services of an experienced superintendent, who shall be constantly in charge of the work.

B. Shop Drawings: Provide scaled shop drawings, indicating coordination with other trades, maintenance clearance and adequate room for equipment installation.

C. Steel Support Welding: Certified WABO welders. Qualify processes and operators according to WABO Standard No. 27-13.

D. Steel Pipe Welding: Qualify processes and operators according to ASME Boiler and Pressure Vessel Code: Section IX, "Welding and Brazing Qualifications.":

1. Comply with provisions in ASME B31.1.

2. Certify that each welder has passed AWS qualification tests for welding processes involved and that certification is current.

E. Coordination:

1. Provide control and electrical wiring details including power supply connections for any dry systems requiring power and control or any electrically activated valves that require interface with control systems.

2. Drawings are diagrammatic, indicating the general arrangement of systems and work. Examine the architectural drawings for exact location of fixtures and equipment. Where they are not definitely located, obtain this information from the Resident Engineer.

3. Follow drawings in laying out work and check drawings of other trades to verify spaces in which work will be installed. Maintain maximum headroom. If space conditions appear inadequate, notify the Resident Engineer before proceeding with the work. Make reasonable modifications in the work without extra cost as needed to prevent conflict with work of other trades and for proper execution of the work.

F. Cooperation with Other Trades

1. Give full cooperation to other trades and furnish in writing to other trades, with copies to the Resident Engineer, any information necessary to permit the work of all trades to be installed satisfactorily and with the least possible interference or delay.

2. Plumbing contractor must inspect and accept the installation work area and furnish in writing to the prime contractor with copies to Resident Engineer prior to starting the installation work.

3. Where plumbing work will be installed in close proximity to, or will interfere with work of other trades, assist in working out space conditions to make a satisfactory adjustment. If work is installed before coordinating with other trades, or if it causes any interference with work of other trades, make the necessary changes in the work to correct the conditions and bear all costs.

4. Furnish to other trades necessary templates, patterns, setting drawings and shop details for the proper installation of work and for coordinating adjacent work. This includes participation and support of any Building Information Modeling efforts associated with this contract.

G. Record Documentation:

1. “As-built” drawings shall comply with as-built specification section 01 78 39 in this contract and shall include as a minimum the location and performance data on each piece of equipment, general configuration of pipe and ductwork distribution system, including sizes, and design flow rates of the actual installation. “As-built” drawings shall also incorporate any mechanical work which deviates from the contract drawings, including changes resulting from addenda, Requests for Information, and Change Orders. As-built drawings must show the work clearly in the actual locations as built.

H. Operating Instructions:

1. Provide operating and maintenance instructions in accordance with Division 01 Operation and Maintenance Data specification:

a. System/Equipment overview (what it is, what it does and which other systems and/or equipment does it interface with).

b. Review of the available operations and maintenance (O&M) materials in accordance with Division 01 Operation and Maintenance Data specification.

c. Review of the Record Drawings on the subject system/equipment, including valve schedules and zone distribution.

2. Hands-on demonstration of all normal maintenance procedures, normal operating modes, and all emergency shutdown and startup procedures.

I. Electrical Characteristics for HVAC Equipment: Equipment of higher electrical characteristics may be furnished provided such proposed equipment is approved in writing and connecting electrical services, circuit breakers, and conduit sizes are appropriately modified. If minimum energy ratings or efficiencies are specified, equipment shall comply with requirements.

PART 2 - PRODUCTS

2.01 PIPE, TUBE, AND FITTINGS

A. Refer to HVAC requirements as stated elsewhere in the Contract Documents for pipe, tube, and fitting materials and joining methods.

B. Pipe Threads: ASME B1.20.1 for factory-threaded pipe and pipe fittings.

2.02 JOINING MATERIALS

A. Refer to HVAC requirements as stated elsewhere in the Contract Documents for special joining materials not listed below.

B. Pipe-Flange Gasket Materials: ASME B16.21, nonmetallic, flat, asbestos-free, 1/8-inch maximum thickness unless thickness or specific material is indicated.

C. Plastic, Pipe-Flange Gasket, Bolts, and Nuts: Type and material recommended by piping system manufacturer, unless otherwise indicated.

D. Solder Filler Metals: ASTM B32, lead-free alloys. Include water-flushable flux according to ASTM B813.

E. Brazing Filler Metals: AWS A5.8/A5.8M, BCuP Series or BAg1, unless otherwise indicated.

F. Welding Filler Metals: Comply with AWS D10.12M/D10.12.

G. Solvent Cements for Joining Plastic Piping:

1. CPVC Piping: ASTM F493.

2. PVC Piping: ASTM D2564. Include primer according to ASTM F656.

H. Adhesives and sealants applied within the weather barrier shall meet VOC and general emissions testing requirements in accordance with the LEED certification requirements

(including the LEED specifications matrix requirements), and Sound Transit Sustainability Checklist as stated elsewhere in the Contract Documents.:

2.03 DIELECTRIC FITTINGS

A. Description: Combination fitting of copper alloy and ferrous materials with threaded, solder-joint, plain, or weld-neck end connections that match piping system materials.

B. Insulating Material: Suitable for system fluid, pressure, and temperature.

C. Dielectric Unions: Factory-fabricated, union assembly, for 250 pounds per square inch gauge minimum working pressure at 180 degrees Fahrenheit.

D. Dielectric Flanges: Factory-fabricated, companion-flange assembly, for 150 or 300 pounds per square inch gauge minimum working pressure as required to suit system pressures.

E. Dielectric Couplings: Galvanized-steel coupling with inert and noncorrosive, thermoplastic lining; threaded ends; and 300 pounds per square inch gauge minimum working pressure at 225 degrees Fahrenheit.

F. Dielectric Nipples: Electroplated steel nipple with inert and noncorrosive, thermoplastic lining; plain, threaded, or grooved ends; and 300 pounds per square inch gauge minimum working pressure at 225 degrees Fahrenheit.

2.04 MECHANICAL SLEEVE SEALS

A. Description: Modular sealing element unit, designed for field assembly, to fill annular space between pipe and sleeve.

B. Sealing Elements: EPDM interlocking links shaped to fit surface of pipe. Include type and number required for pipe material and size of pipe.

C. Pressure Plates: Stainless steel. Include two for each sealing element.

D. Connecting Bolts and Nuts: Stainless steel of length required to secure pressure plates to sealing elements. Include one for each sealing element.

2.05 SLEEVES

A. Galvanized-Steel Sheet: 0.0239-inch minimum thickness; round tube closed with welded longitudinal joint.

B. Steel Pipe: ASTM A53/A53M, Type E, Grade B, Schedule 40, galvanized, plain ends.

C. Cast Iron: Cast or fabricated "wall pipe" equivalent to ductile-iron pressure pipe, with plain ends and integral waterstop, unless otherwise indicated.

D. Stack Sleeve Fittings: Manufactured, cast-iron sleeve with integral clamping flange. Include clamping ring and bolts and nuts for membrane flashing.

E. Underdeck Clamp: Clamping ring with set screws.

F. Molded PE: Reusable, PE, tapered-cup shaped, and smooth-outer surface with nailing flange for attaching to wooden forms.

2.06 ESCUTCHEONS

A. Description: Manufactured wall and ceiling escutcheons and floor plates, with an ID to closely fit around pipe, tube, and insulation of insulated piping and an OD that completely covers opening.

B. One-Piece, Deep-Pattern Type: Deep-drawn, box-shaped brass with polished chrome- plated finish.

C. One-Piece, Cast-Brass Type: With set screw:

1. Finish: Polished chrome-plated and rough brass.

D. Split-Casting, Cast-Brass Type: With concealed hinge and set screw:

1. Finish: Polished chrome-plated.

2.07 GROUT

A. Description: ASTM C1107/C1107M, Grade B, nonshrink and nonmetallic, dry hydraulic-cement grout.

1. Characteristics: Post-hardening, volume-adjusting, nonstaining, noncorrosive, nongaseous, and recommended for interior and exterior applications.

2. Design Mix: 5000 pounds per square inch, 28-day compressive strength.

3. Packaging: Premixed and factory packaged.

B. Grout applied within the weather barrier shall meet VOC and general emissions testing requirements in accordance with LEED certification requirements (including the LEED specifications matrix requirements) and Sound Transit Sustainability Checklist as stated elsewhere in the Contract Documents

PART 3 - EXECUTION

3.01 PIPING SYSTEMS – COMMON REQUIREMENTS

A. Install piping according to HVAC requirements as stated elsewhere in the Contract Documents specifying piping systems.

B. Contract Drawings, schematics, and diagrams indicate general location and arrangement of piping systems. Indicated locations and arrangements were used to size pipe and calculate friction loss, expansion, pump sizing, and other design considerations. Install piping as indicated unless deviations to layout are approved on Coordination Drawings.

C. Install piping in concealed locations, unless otherwise indicated and except in equipment rooms and service areas.

D. Install piping indicated to be exposed and piping in equipment rooms and service areas at right angles or parallel to building walls. Diagonal runs are prohibited unless specifically indicated otherwise.

E. Install piping above accessible ceilings to allow sufficient space for ceiling panel removal.

F. Install piping to permit valve servicing.

G. Install piping at indicated slopes.

H. Install piping free of sags and bends.

I. Install fittings for changes in direction and branch connections.

J. Install piping to allow application of insulation.

K. Select system components with pressure rating equal to or greater than system operating pressure.

L. Install escutcheons for penetrations of walls, ceilings, and floors.

M. Install sleeves for pipes passing through concrete and masonry walls, gypsum-board partitions, and concrete floor and roof slabs.

N. Aboveground, Exterior-Wall Pipe Penetrations: Seal penetrations using sleeves and mechanical sleeve seals. Select sleeve size to allow for 1-inch annular clear space between pipe and sleeve for installing mechanical sleeve seals.

1. Install steel pipe for sleeves smaller than 6 inches in diameter.

2. Install cast-iron "wall pipes" for sleeves 6 inches and larger in diameter.

3. Mechanical Sleeve Seal Installation: Select type and number of sealing elements required for pipe material and size. Position pipe in center of sleeve. Assemble mechanical sleeve seals and install in annular space between pipe and sleeve. Tighten bolts against pressure plates that cause sealing elements to expand and make watertight seal.

O. Underground, Exterior-Wall Pipe Penetrations: Install cast-iron "wall pipes" for sleeves. Seal pipe penetrations using mechanical sleeve seals. Select sleeve size to allow for 1-inch annular clear space between pipe and sleeve for installing mechanical sleeve seals.

P. Mechanical Sleeve Seal Installation: Select type and number of sealing elements required for pipe material and size. Position pipe in center of sleeve. Assemble mechanical sleeve seals and install in annular space between pipe and sleeve. Tighten bolts against pressure plates that cause sealing elements to expand and make watertight seal.

Q. Fire-Barrier Penetrations: Maintain indicated fire rating of walls, partitions, ceilings, and floors at pipe penetrations. Seal pipe penetrations with firestop materials. Refer to firestopping requirements as stated elsewhere in the Contract Documents, for materials.

R. Verify final equipment locations for roughing-in.

S. Refer to equipment specifications in other Sections of these Contract Documents for roughing-in requirements.

3.02 PIPING JOINT CONSTRUCTION

A. Join pipe and fittings according to HVAC requirements as stated elsewhere in the Contract Documents specifying piping systems.

B. Ream ends of pipes and tubes and remove burrs. Bevel plain ends of steel pipe.

C. Remove scale, slag, dirt, and debris from inside and outside of pipe and fittings before assembly.

D. Soldered Joints: Apply ASTM B813, water-flushable flux, unless otherwise indicated, to tube end. Construct joints according to ASTM B828 or Copper Development Association's "Copper Tube Handbook," using lead-free solder alloy complying with ASTM B32.

E. Brazed Joints: Construct joints according to AWS's "Brazing Handbook," "Pipe and Tube" Chapter, using copper-phosphorus brazing filler metal complying with AWS A5.8/A5.8M.

F. Threaded Joints: Thread pipe with tapered pipe threads according to ASME B1.20.1. Cut threads full and clean using sharp dies. Ream threaded pipe ends to remove burrs and restore full ID. Join pipe fittings and valves as follows:

1. Apply appropriate tape or thread compound to external pipe threads unless dry seal threading is specified.

2. Damaged Threads: Do not use pipe or pipe fittings with threads that are corroded or damaged. Do not use pipe sections that have cracked or open welds.

G. Welded Joints: Construct joints according to AWS D10.12M/D10.12, using qualified processes and welding operators according to Article 1.04, herein.

H. Flanged Joints: Select appropriate gasket material, size, type, and thickness for service application. Install gasket concentrically positioned. Use suitable lubricants on bolt threads.

I. Plastic Piping Solvent-Cement Joints: Clean and dry joining surfaces. Join pipe and fittings according to the following:

1. Comply with ASTM F402, for safe-handling practice of cleaners, primers, and solvent cements.

2. CPVC Piping: Join according to ASTM D2846/D2846M Appendix.

3. PVC Pressure Piping: Join schedule number ASTM D1785, PVC pipe and PVC socket fittings according to ASTM D2672. Join other-than-schedule-number PVC pipe and socket fittings according to ASTM D2855.

4. PVC Nonpressure Piping: Join according to ASTM D2855.

J. Plastic Pressure Piping Gasketed Joints: Join according to ASTM D3139.

K. Plastic Nonpressure Piping Gasketed Joints: Join according to ASTM D3212.

L. PE Piping Heat-Fusion Joints: Clean and dry joining surfaces by wiping with clean cloth or paper towels. Join according to ASTM D2657.

1. Plain-End Pipe and Fittings: Use butt fusion.

2. Plain-End Pipe and Socket Fittings: Use socket fusion.

M. Fiberglass Bonded Joints: Prepare pipe ends and fittings, apply adhesive, and join according to pipe manufacturer's written instructions.

3.03 PIPING CONNECTIONS

A. Make connections according to the following, unless otherwise indicated:

1. Install unions, in piping NPS 2 and smaller, adjacent to each valve and at final connection to each piece of equipment.

2. Install flanges, in piping NPS 2-1/2 and larger, adjacent to flanged valves and at final connection to each piece of equipment.

3. Dry Piping Systems: Install dielectric unions and flanges to connect piping materials of dissimilar metals.

4. Wet Piping Systems: Install dielectric coupling and nipple fittings to connect piping materials of dissimilar metals.

3.04 EQUIPMENT INSTALLATION – COMMON REQUIREMENTS

A. Install equipment to allow maximum possible headroom unless specific mounting heights are not indicated.

B. Install equipment level and plumb, parallel and perpendicular to other building systems and components in exposed interior spaces, unless otherwise indicated.

C. Install HVAC equipment to facilitate service, maintenance, and repair or replacement of components. Connect equipment for ease of disconnecting, with minimum interference to other installations. Extend grease fittings to accessible locations.

D. Install equipment to allow right of way for piping installed at required slope.

3.05 CONCRETE BASES

A. Anchor equipment to concrete base according to equipment manufacturer's written instructions and according to Authority having Jurisdiction Seismic Codes, and Division 03 Anchorage to Concrete Specification.

1. Construct concrete bases of dimensions indicated, but not less than 4 inches larger in both directions than supported unit with chamfer edges.

2. Install dowel rods to connect concrete base to concrete floor as shown on structural drawings.

3. Install Type 304 stainless steel anchors for supporting equipment that extends through concrete base, and anchors into structural concrete floor. Provide dielectric insulation between dissimilar metals.

4. Place and secure anchorage devices. Use supported equipment manufacturer's setting drawings, templates, diagrams, instructions, and directions furnished with items to be embedded.

5. Install anchor bolts to elevations required for proper attachment to supported equipment.

6. Install anchor bolts according to anchor-bolt manufacturer's written instructions.

7. Use 4,000-psi, 28-day compressive-strength concrete.

B. Contractor responsible for anchoring equipment to pad according to vibration and seismic controls for HVAC piping and equipment specification of this project.

3.06 ERECTION OF METAL SUPPORTS AND ANCHORAGES

A. Refer to metal fabrications requirements as stated elsewhere in the Contract Documents, for structural steel.

B. Cut, fit, and place miscellaneous metal supports accurately in location, alignment, and elevation to support and anchor HVAC materials and equipment.

C. Field Welding: Comply with AWS D1.1/D1.1M.

3.07 ERECTION OF WOOD SUPPORTS AND ANCHORAGES

A. Cut, fit, and place wood grounds, nailers, blocking, and anchorages to support, and anchor HVAC materials and equipment.

B. Select fastener sizes that will not penetrate members if opposite side will be exposed to view or will receive finish materials. Tighten connections between members. Install fasteners without splitting wood members.

C. Attach to substrates as required to support applied loads.

3.08 GROUTING

A. Mix and install grout as specified in the requirements of non-shrink grouting as stated elsewhere in the Contract Documents, for HVAC equipment base bearing surfaces, pump and other equipment base plates, and anchors.

B. Clean surfaces that will come into contact with grout.

C. Provide forms as required for placement of grout.

D. Avoid air entrapment during placement of grout.

E. Place grout, completely filling equipment bases.

F. Place grout on concrete bases and provide smooth bearing surface for equipment.

G. Place grout around anchors.

H. Cure placed grout.

3.09 COMMISSIONING

A. See commissioning of HVAC systems requirements as stated elsewhere in the Contract Documents, for commissioning requirement pertaining to the work of this Section.

B. In addition to commissioning required elsewhere in the Contract Documents, the systems and equipment included in this section shall be subject to commissioning process activities in accordance to LEED requirements for commissioning of HVAC (including the LEED specifications matrix requirements) as stated elsewhere in the Contract Documents

END OF SECTION

SECTION 23 05 17

SLEEVES AND SLEEVE SEALS FOR HVAC PIPING

PART 1 - GENERAL

1.01 SUMMARY

A. Section includes:

1. Requirements for the following:

a. Sleeves.

b. Stack-sleeve fittings.

c. Sleeve-seal systems.

d. Sleeve-seal fittings.

e. Grout.

1.02 REFERENCES

A. This Section incorporates by reference the latest revisions of the following documents:

1. ASTM International (ASTM):

a. ASTM A53.

b. ASTM E84/E814.

c. ASTM A377.

d. ASTM A-653.

e. ASTM A-888.

f. ASTM C1107.

g. ASME B36.10.

2. Underwriter Laboratories (UL):

a. UL (FRD) – Fire Resistance.

1.03 SUBMITTALS

A. Transmit:

1. Product Data: For each type of product indicated.(Submittals shall be reviewed by HVAC and Structurak EOR for applicability.)

PART 2 - PRODUCTS

2.01 COMPONENTS

A. Sleeves:

1. Cast-Iron Wall Pipes: ASTM A377, Cast or fabricated of cast or ductile iron and equivalent to ductile-iron pressure pipe, with plain ends and integral waterstop unless otherwise indicated.

2. Cast Iron Pipe sleeves: ASTM A-888 Cast Iron pipe with plain ends.

3. Galvanized-Steel Wall Pipes: ASTM A 53/A 53M, Schedule 40, with plain ends and welded steel collar; zinc coated Or equal corrosion inhibitor coating.

4. Galvanized-Steel-Pipe Sleeves: ASTM A 53/A 53M, Type E, Grade B, Schedule 40, zinc coated, with plain ends.

5. Galvanized-Steel-Sheet Sleeves: ASTM A653, 0.0239-inch minimum thickness; round tube closed with welded longitudinal joint.

B. Stack-Sleeve Fittings:

1. Manufacturers: Subject to compliance with requirements, available manufacturers offering products that may be incorporated into the Work include, but are not limited to, the following:

a. Jay R Smith. Mfg. Co.

b. Wade.

c. Zurn.

2. Description: Manufactured cast-iron sleeve with integral clamping flange. Include clamping ring, bolts, and nuts for membrane flashing:

a. Underdeck Clamp: Clamping ring with setscrews.

C. Sleeve-Seal Systems:

1. Manufacturers: Subject to compliance with requirements, available manufacturers offering products that may be incorporated into the Work include, but are not limited to, the following:

a. Advance Products & Systems, Inc.

b. CALPICO, Inc.

c. Metraflex Company (The).

d. Link-Seal.

e. Pipeline Seal and Insulator, Inc.

f. Proco Products, Inc.

2. Description: Modular sealing-element unit, designed for field assembly, for filling annular space between piping and sleeve:

a. An assembly consisting of a stainless steel frame, a compression mechanism, and insert modules for pipe, duct and tubing.

b. Comply with F- and T-ratings as required by local codes, code official, and as tested in accordance with ASTM E814 or UL1479.

c. Sealing Elements: EPDM-rubber interlocking links shaped to fit surface of pipe. Include type and number required for pipe material and size of pipe.

d. Designs should be water and gas tight to 14.5 psi.

e. Seals shall be asbestos free, lead free, halogen free

f. Pressure Plates: Reinforced Nylon Polymer or Stainless steel.

g. Connecting Bolts and Nuts: Stainless steel of length required to secure pressure plates to sealing elements.

D. Sleeve-Seal Fittings:

1. Manufacturers: Subject to compliance with requirements, available manufacturers offering products that may be incorporated into the Work include, but are not limited to, the following:

a. HoldRite.

b. The Metraflex Company.

c. Pipeline Seal and Insulator, Inc.

2. Description: Manufactured plastic, sleeve-type, waterstop assembly made for imbedding in concrete slab or wall. Unit has plastic or rubber waterstop collar with center opening to match piping OD.

E. Grout:

1. Standard: ASTM C 1107/C 1107M, Grade B, post-hardening and volume-adjusting, dry, hydraulic-cement grout.

2. Characteristics: Nonshrink; recommended for interior and exterior applications.

3. Design Mix: 5000-psi, 28-day compressive strength.

4. Packaging: Premixed and factory packaged.

PART 3 - EXECUTION

3.01 SLEEVE INSTALLATION

A. Install sleeves for piping passing through penetrations in floors, partitions, roofs, and walls. Provide waterproof flashing through exterior above grade roof.

B. For sleeves that will have sleeve-seal system installed, select sleeves of size large enough to provide 1-inch annular clear space between piping and concrete slabs and walls. Sleeves shall be two inches larger than proposed pipe diameter:

1. Sleeves are not required for core-drilled holes.

C. Install sleeves in concrete floors, concrete roof slabs, and concrete walls as new slabs and walls are constructed:

1. Permanent sleeves are not required for holes in slabs formed by molded-PE or -PP sleeves.

2. Cut sleeves to length for mounting flush with both surfaces:

   a. Exception: Extend sleeves installed in floors of mechanical equipment areas or other wet areas 2 inches above finished floor level.

3. Using grout, seal the space outside of sleeves in slabs and walls without sleeve-seal system.

D. Install sleeves for pipes passing through interior partitions:

1. Cut sleeves to length for mounting flush with both surfaces.

2. Install sleeves that are large enough to provide 1/4-inch annular clear space between sleeve and pipe or pipe insulation.

3. Seal annular space between sleeve and piping or piping insulation; use joint sealants appropriate for size, depth, and location of joint. Comply with applicable codes and standards requirements for sealants.

E. Fire-Barrier Penetrations: Maintain indicated fire rating of walls, partitions, ceilings, and floors at pipe penetrations. Seal pipe penetrations with firestop materials. Comply with applicable codes and standards requirements for fire stopping.

3.02 STACK-SLEEVE-FITTING INSTALLATION

A. Install stack-sleeve fittings in new slabs as slabs are constructed:

1. Install fittings that are large enough to provide 1/4-inch annular clear space between sleeve and pipe or pipe insulation.

2. Secure flashing between clamping flanges for pipes penetrating floors with membrane waterproofing. Comply with requirements for flashing as specified elsewhere in the Contract Documents.-applicable codes and standard for flashing.

3. Install section of cast-iron soil pipe to extend sleeve to 2 inches above finished floor level.

4. Extend cast-iron sleeve fittings below floor slab as required to secure clamping ring if ring is specified.

5. Using grout, seal the space around outside of stack-sleeve fittings. Comply with applicable codes and standards requirements for joint sealants.

B. Fire-Barrier Penetrations: Maintain indicated fire rating of floors at pipe penetrations. Seal pipe penetrations with firestop materials. Comply with applicable codes and standards requirements for fire stopping.

3.03 SLEEVE-SEAL-SYSTEM INSTALLATION

A. Install sleeve-seal systems in sleeves in exterior concrete walls above and below grade and slabs-on-grade at service piping entries into building.

B. Select type, size, and number of sealing elements required for piping material and size and for sleeve ID or hole size. Position piping in center of sleeve. Center piping in penetration, assemble sleeve-seal system components, and install in annular space between piping and sleeve. Tighten bolts against pressure plates that cause sealing elements to expand and make a watertight seal.

C. Fire-Barrier Penetrations: Maintain indicated fire rating of wall, floor at pipe penetrations. Seal pipe penetrations with firestop materials. Comply with requirements for firestopping as specified in this specification section.

3.04 SLEEVE-SEAL-FITTING INSTALLATION

A. Install sleeve-seal fittings in new walls and slabs as they are constructed.

B. Assemble fitting components of length to be flush with both surfaces of concrete slabs and walls. Position waterstop flange to be centered in concrete slab or wall.

C. Secure nailing flanges to concrete forms.

D. Using grout, seal the space around outside of sleeve-seal fittings.

E. Fire-Barrier Penetrations: Maintain indicated fire rating of wall, floor at pipe penetrations. Seal pipe penetrations with firestop materials. Comply with applicable codes and standards requirements for firestopping.

3.05 SLEEVE AND SLEEVE-SEAL SCHEDULE

A. Use sleeves and sleeve seals for the following piping-penetration applications:

1. Concrete structural elements (Not covered elsewhere in sleeve and sleeve-seal schedule):

a. Piping Smaller Than NPS 6: Cast-iron pipe sleeves.

b. Piping NPS 6 and Larger: Cast-iron pipe sleeves.

2. Exterior Concrete Walls above Grade:

a. Piping Smaller Than NPS 6: Cast-iron wall pipe sleeves with sleeve-seal system.

B. Select sleeve size to allow for 1-inch annular clear space between piping and sleeve for installing sleeve seal system:

a. Piping NPS 6 and Larger: Cast-iron wall pipe sleeves with sleeve-seal system

C. Select sleeve size to allow for 1-inch annular clear space between piping and sleeve for installing sleeve seal system:

1. Exterior Concrete Walls below Grade:

a. Piping Smaller Than NPS 6: Cast-iron wall pipe sleeves with sleeve-seal system:

1) Select sleeve size to allow for 1-inch annular clear space between piping and sleeve for installing sleeve-seal system.

b. Piping NPS 6 and Larger: Cast-iron wall pipe sleeves with sleeve-seal system:

1) Select sleeve size to allow for 1-inch annular clear space between piping and sleeve for installing sleeve-seal system.

2. Concrete Slabs-on-Grade:

   a. Piping Smaller Than NPS 6: Cast-iron pipe wall sleeves with sleeve-seal system:

      1) Select sleeve size to allow for 1-inch annular clear space between piping and sleeve for installing sleeve-seal system.

   b. Piping NPS 6 and Larger: Cast-iron wall pipe sleeves with sleeve-seal system:

      1) Select sleeve size to allow for 1-inch annular clear space between piping and sleeve for installing sleeve-seal system.

3. Concrete Slabs above Grade:

   a. Piping Smaller Than NPS 6: Galvanized-steel-pipe sleeves Stack-sleeve fittings.

   b. Piping NPS 6 and Larger: Galvanized-steel-pipe sleeves Stack-sleeve fittings.

4. Interior Partitions:

   a. Piping Smaller Than NPS 6: Galvanized-steel-pipe sleeves.

   b. Piping NPS 6 and Larger: Galvanized-steel-sheet sleeves.

END OF SECTION

SECTION 23 05 53

IDENTIFICATION FOR HVAC PIPING AND EQUIPMENT

PART 1 - GENERAL

1.01 SUMMARY

A. Section includes:

1. Requirements for the following:

a. Equipment labels.

b. Warning signs and labels.

c. Pipe labels.

d. Duct labels.

e. Stencils.

f. Valve tags.

g. Valve Labels.

1.02 REFERENCES

A. This Section incorporates by reference the latest revisions of the following documents:

1. ANSI/ASME International:

a. ANSI/ASME A13.1 Scheme for Identification of Piping Systems.

1.03 SUBMITTALS

A. Submit:

1. Product Data: For each type of product indicated.

2. Samples: For color, letter style, and graphic representation required for each identification material and device.

3. Equipment Label Schedule: Include a listing of all equipment to be labeled with the proposed content for each label.

4. Valve Schedules with numbering scheme: For each piping system to include in maintenance manuals.

1.04 QUALITY ASSURANCE

A. Coordination:

1. Coordinate installation of identifying devices with completion of covering and painting of surfaces where devices are to be applied.

2. Coordinate installation of identifying devices with locations of access panels and doors.

3. Install identifying devices before installing acoustical ceilings and similar concealment.

PART 2 - PRODUCTS

2.01 COMPONENTS

A. Equipment Labels:

1. Material and Thickness: Multilayer, multicolor, plastic labels for mechanical engraving, 1/8 inch thick, and having predrilled holes for attachment hardware if the label is to be mounted with fasteners.

2. Letter Color: Black.

3. Background Color: White.

4. Maximum Temperature: Able to withstand temperatures up to 160 degrees Fahrenheit.

5. Minimum Label Size: Length and width vary for required label content, but not less than 2-1/2 by 3/4 inch.

6. Minimum Letter Size: 1/2 inch for name of units for viewing distances up to 72 inches, and proportionately larger lettering for greater viewing distances. If needed include secondary lettering two-thirds to three-fourths the size of principal lettering.

7. Fasteners: Stainless-steel self-tapping screws.

8. Adhesive: Contact-type permanent adhesive, compatible with label and with substrate.

9. Label Content: Include equipment's Contract Drawing designation or unique equipment number.

B. Warning and Labels:

1. Material and Thickness: Multilayer, multicolor, plastic labels for mechanical engraving, 1/8 inch thick, and having predrilled holes for attachment hardware if the label is to be mounted with fasteners.

2. Letter Color: White.

3. Background Color: Red.

4. Maximum Temperature: Able to withstand temperatures up to 160 degrees Fahrenheit.

5. Minimum Label Size: Length and width vary for required label content, but not less than 2-1/2 by 3/4 inch.

6. Minimum Letter Size: 1/2 inch for name of units for viewing distances up to 72 inches, and proportionately larger lettering for greater viewing distances. If needed include secondary lettering 2/3 to 3/4 the size of principal lettering.

7. Fasteners: Stainless-steel self-tapping screws.

8. Adhesive: Contact-type permanent adhesive, compatible with label and with substrate.

9. Label Content: Include caution and warning information, plus emergency notification instructions.

C. Pipe Labels:

1. General Requirements for Manufactured Pipe Labels: Preprinted, color-coded, with lettering indicating service, and showing flow direction.

2. Pretensioned Pipe Labels: Precoiled, semirigid plastic formed to partially cover circumference of pipe and to attach to pipe without fasteners or adhesive.

3. Self-Adhesive Pipe Labels: Printed plastic with contact-type, permanent-adhesive backing.

4. Pipe Label Schedule:

a. Label Letter Color: Follow color scheme per ANSI/ASME standard A13.1:

1) Label Background Color: Follow color scheme per ANSI/ASME standard A13.1

5. Pipe Label Contents: Include identification of piping service using same designations or abbreviations as used on Drawings, pipe size, and an arrow indicating flow direction.

a. Flow-Direction Arrows: Integral with piping system service lettering to accommodate both directions or as separate unit on each pipe label to indicate flow direction.

D. Lettering Size: Minimum text height per ANSI/ASME 13.1Duct Labels:

1. Material and Thickness: Multilayer, multicolor, plastic-laminated self-adhesive labels, 1/8 inch thick.

2. Letter Color: White.

3. Background Color in the following color codes:

a. Blue: Supply air and mixed-air ducts.

b. Yellow: Hot-air supply ducts.

c. Green: For exhaust, outside-, relief-, and return ducts.

d. ANSI/ASME A13.1 Colors and Designs: For hazardous material exhaust.

4. Maximum Temperature: Able to withstand temperatures up to 160 degrees Fahrenheit.

5. Minimum Label Size: Length and width vary for required label content, but not less than 2-1/2 by 3/4 inch.

6. Minimum Letter Size: 1/2 inch for name of units for viewing distances up to 72 inches, and proportionately larger lettering for greater viewing distances. If needed include secondary lettering 2/3 to 3/4 the size of principal lettering.

7. Adhesive: Contact-type permanent adhesive, compatible with label and with substrate.

8. Duct Label Contents: Include identification of duct service using same designations or abbreviations as used on Drawings, duct size, and an arrow indicating flow direction:

   a. Flow-Direction Arrows: Integral with duct system service lettering to accommodate both directions or as separate unit on each duct label to indicate flow direction.

E. Stencils:

1. Stencils: Prepared with letter sizes according to ANSI/ASME A13.1 for piping; minimum letter height of 1-1/4 inches for ducts; and minimum letter height of 3/4 inch for access panel and door labels, equipment labels, and similar operational instructions:

   a. Stencil Material: Aluminum.

   b. Stencil Paint: Exterior, gloss, alkyd enamel black unless otherwise indicated. Paint may be in pressurized spray-can form.

   c. Identification Paint: Exterior, alkyd enamel in colors according to ANST/ASME A13.1 unless otherwise indicated.

F. Valve Tags:

1. Valve Tags: Stamped or engraved with 1/4-inch letters for piping system abbreviation and 1/2-inch numbers:

   a. Tag Material: Brass, 0.032-inch minimum thickness, and having predrilled or stamped holes for attachment hardware.

   b. Fasteners: Brass wire-link or beaded chain; or S-hook.

2. Valve-Tag Application Schedule: Tag valves according to size, shape, and color scheme and with captions similar to those indicated in the following subparagraphs:

   a. Valve-Tag Size and Shape:

      1) Hydronic and Refrigerant: 1-1/2 inches, round.

   b. Valve-Tag Color:

      1) Hydronic and Refrigerant: Natural.

   c. Letter Color:

      1) Hydronic and Refrigerant: Black.

3. Valve Schedules: For each piping system, on 8-1/2-by-11-inch bond paper. Tabulate valve number, piping system, system abbreviation (as shown on valve tag), location of valve (room or space), normal-operating position (open, closed, or modulating), and variations for identification. Mark valves for emergency shutoff and similar special uses:

   a. Valve-tag schedule shall be included in operation and maintenance data and hard copy on site, final location to be determined by ST.

G. Valve Labels:

1. Material and Thickness: Multilayer, multicolor, plastic-laminated labels for mechanical engraving, 1/8 inch thick, self-adhesive label or having predrilled holes for attachment hardware if the label to be mounted with fasteners.

2. Valve Label Schedule Valve Label Application Schedule: Valves label according to size, shape, and color scheme and with captions similar to those indicated in the following subparagraphs:

a. Valve Label Size and Shape:

1) Hydronic and Refrigerant: Length and width vary for required label content, but not less than 2-1/2 by 3/4 inch.

2) Minimum Letter Size: 1/2 inch for name of valves for viewing distances up to 72 inches, and proportionately larger lettering for greater viewing distances. If needed include secondary lettering two-thirds to three-fourths the size of principal lettering.

3. Maximum Temperature: Able to withstand temperatures up to 160 degrees Fahrenheit.

4. Fasteners: Stainless-steel self-tapping screws.

5. Adhesive: Contact-type permanent adhesive, compatible with label and with substrate

PART 3 - EXECUTION

3.01 IDENTIFICATION INSTALLATION PREPARATION

A. Clean piping and equipment surfaces of substances that could impair bond of identification devices, including dirt, oil, grease, release agents, and incompatible primers, paints, and encapsulants.

3.02 IDENTIFICATION INSTALLATION

A. Equipment Label Installation:

1. Install or permanently fasten labels on each major item of mechanical equipment.

2. Locate equipment labels where accessible and visible.

B. Pipe Label Installation:

1. Piping Color-Coding: Painting of piping shall be per the requirements of high-performance coatings as specified elsewhere in the Contract Documents.

2. Stenciled Pipe Label Option: Stenciled labels may be provided instead of manufactured pipe labels, at Installer's option. Install stenciled pipe labels, complying with ANSI/ASME A13.1, on each piping system:

a. Identification Paint: Use for contrasting background.

b. Stencil Paint: Use for pipe marking.

3. Locate pipe labels where piping is exposed or above accessible ceilings in finished spaces; machine rooms; accessible maintenance spaces such as shafts, tunnels, and plenums; and exterior exposed locations as follows:

   a. Near each valve and control device.

   b. Near each branch connection, excluding short takeoffs for fixtures and terminal units. Where flow pattern is not obvious, mark each pipe at branch.

   c. Near penetrations through walls, floors, ceilings, and inaccessible enclosures.

   d. At access doors, manholes, and similar access points that permit view of concealed piping.

   e. Near major equipment items and other points of origination and termination.

   f. Spaced at maximum intervals of 50 feet along each run. Reduce intervals to 25 in areas of congested piping and equipment.

   g. On piping above removable acoustical ceilings. Omit intermediately spaced labels.

C. Duct Label Installation:

1. Install plastic-laminated self-adhesive duct labels with permanent adhesive on air ducts.

2. Stenciled Duct Label Option: Larger sized stenciled labels, showing service and flow direction may be provided instead of plastic-laminated duct labels, at Installer's option, if lettering larger than 1 inch high is needed for proper identification because of distance from normal location of required identification.

3. Locate labels near points where ducts enter into concealed spaces and at maximum intervals of 50 feet in each space where ducts are exposed or concealed by removable ceiling system. Reduced intervals to 25 feet in areas of congested piping and equipment.

D. Valve-Tag And Valve Label Installation:

1. Valve-Tag Installation:

   a. Install tags on valves and control devices in piping systems, except check valves; valves within factory-fabricated equipment units; shutoff valves; faucets; convenience and lawn-watering hose connections; and HVAC terminal devices and similar roughing-in connections of end-use fixtures and units. List tagged valves in a valve schedule.

2. Valve Label Installation:

   a. As an option, valve label in place of valve tags can be installed on wall or column not more than 6 inches behind the valve. Install valve label for valves and control devices in piping systems, except check valves; valves within factory-fabricated equipment units; shutoff valves, and HVAC terminal devices and similar roughing-in connections of end-use fixtures and units. List valve labels in a valve schedule.

END OF SECTION

SECTION 23 08 00

COMMISSIONING OF HVAC SYSTEMS

NOTE TO DESIGNER:

SECTIONS WITH BRACKETS. E.G. (TEXT) ARE TO BE MODIFIED OR DELETED IF NOT APPLICABLE. ITALICIZED TEXT PROVIDES INSTRUCTION TO THE DESIGNER TO INCLUDE LANGUAGE ON SPECIFIC TOPIC WHEN APPLICABLE. THE INSTRUCTIONS ARE TO BE DELETED WHEN THE SPECIFICATION IS FINALIZED. LANGUAGE NOT IN BRACKETS IS TO BE USED AS IS WITHOUT MODIFICATION OR WITH AN APPROVED SPECIFICATION MODIFICATION REQUEST.

DESIGNER TO DELETE TEXT ABOVE FOR FINAL SECTION

PART 1 - GENERAL

1.01 SUMMARY

A. Section Includes:

1. Requirements for the commissioning process for HVAC, including:

a. Level 1 commissioning activities for HVAC.

b. Level 2 commissioning activities for HVAC.

c. Support for Level 3 commissioning activities related to HVAC.

d. Support for Level 4 commissioning activities related to HVAC.

1.02 REFERENCES

A. This Section incorporates by reference the latest revisions of the following documents:

1. American Society of Heating, Refrigerating and Air Conditioning Engineers (ASHRAE):

a. ASHRAE Guideline 0-2005, The Commissioning Process (including Amendments).

2. Sheet Metal and Air Conditioning Contractors' National Association (SMACNA):

a. SMACNA HVAC Air Duct Leakage Test Manual (1st Edition).

B. Definitions:

1. See general commissioning requirements as stated elsewhere in the Contract Documents for commissioning definitions.

2. Systems, Equipment, and Components: Where these terms are used together or separately, they shall mean "as-built" systems, equipment, and components.

3. Command: When used in the description of a commissioning activity, command means to use the station human machine interface (HMI) for the building management system (BMS) to control systems, equipment and components.

4. Human Machine Interface (HMI): Equipment, software, and functional programming at the locations shown on the Plans.

1.03 COORDINATION

A. See general commissioning requirements Section 01 91 13 – General Systems Testing and Commissioning Requirements and as stated elsewhere in the Contract Documents for general coordination requirements related to commissioning.

1.04 COMMISSIONING ACTIVITIES

A. Furnish labor and material to accomplish building commissioning as specified in general commissioning requirements as stated elsewhere in the Contract Documents, and herein, including:

1. Provide to the Testing and Commissioning Manager preliminary O&M information for use in developing commissioning test procedures.

2. Assist the Testing and Commissioning Manager in developing commissioning activity procedures and data forms submittals for work specified in this Section.

3. Provide information to the Testing and Commissioning Manager needed for control interface wiring diagrams submittals for the work of this Section.

4. Perform Level 1 and Level 2 commissioning activities specified in this Section, including installation verification, static tests, start-up, component tests, equipment tests, systems tests, and intrastation system interface tests.

5. Provide support for Level 3 commissioning activities, including jointly with the communications system contractor field testing points in the interface terminal strips, being present during level 3 testing with adequate labor and support personnel to adjust equipment and troubleshoot system failures that might arise. When material or equipment provided by this Division is found to be in conflict with specified criteria, adjust or replace said material or equipment, with the assistance of manufacturer as needed.

6. Operate equipment and system during commissioning activities as required by the Testing and Commissioning Manager .

7. Perform and document commissioning tests to verify readiness for commissioning test demonstration. Commissioning tests are specified herein.

8. Correct issues and repeat commissioning tests when results do not meet acceptance criteria.

9. Commissioning Test Demonstrations: General requirements for commissioning test demonstrations are specified in general commissioning requirements, as stated elsewhere in the Contract Documents:

a. Repeat commissioning tests on a sample basis to demonstrate acceptable performance: Level 1 Component, Equipment, and System Commissioning Tests, and for Level 2 Intra-station system interface tests.

b. Record and submit commissioning test demonstration data and issues.

c. Correct issues and repeat commissioning test demonstration when results do not meet Acceptance Criteria.

10. Attend commissioning meetings as requested by the Testing and Commissioning Manager .

11. Report any inconsistencies or issues in system operations or performance.

12. Provide personnel to support commissioning test demonstration specified herein as requested by the Testing and Commissioning Manager .

13. In the event that a commissioning test demonstration fails, assist in determining the cause of failure. Make corrections as necessary.

14. Cooperate with Testing and Commissioning Manager to make equipment and systems ready for commissioning tests specified herein as early in the construction schedule as possible.

1.05 QUALITY ASSURANCE

A. Coordinate completion of Install Verification forms, by the Quality Control Inspector, as identified in the Contractors Quality Control Inspection and Test Plan.

PART 2 - PRODUCTS

2.01 TEST EQUIPMENT

A. Provide test equipment and instrumentation, including consumable supplies, required to execute commissioning activities. Unless noted otherwise, test equipment and instrumentation remain the property of the Contractor.

B. Provide proprietary test instruments or tools required by the equipment manufacturer. Provide and operate the proprietary test instruments or tools as required for commissioning work.

PART 3 - EXECUTION

3.01 LEVEL 1 COMMISSIONING ACTIVITIES REQUIREMENTS

A. Level 1 commissioning activities scope: Technical requirements for commissioning of Equipment are specified herein.

B. Provide technicians, instrumentation, and tools to perform commissioning activities in accordance with accepted commissioning activity procedures at the direction of the Testing and Commissioning Manager.

C. Scope of Equipment commissioning activities applies to all portions of the installation described in the test. Where sampling is specified, it applies only to the commissioning test demonstration.

D. Upon approval of product submittals associated with the Technical requirements and the scope of Commissioning develop and submit for approval Install Verification Checklist forms for the quality criteria of the Work specified herein.

E. Preparation:

1. Certify that Equipment, subsystems, and equipment have been completed, calibrated, and started; and are operating in accordance with Contract Documents.

2. Testing Instrumentation: Install measuring instruments and logging devices to record test data in accordance with accepted commissioning test procedures as directed by the Testing and Commissioning Manager.

3. Certify that Equipment instrumentation and control systems have been completed and calibrated; are operating according to the Contract Documents; and that pretest set points have been recorded.

F. Test all operating modes, interlocks, control responses to abnormal or emergency conditions, and verify proper response of building automation system controllers and sensors.

G. Perform tests using design conditions whenever possible. If tests cannot be completed because of a deficiency outside the scope of the Equipment system, document the deficiency and report it to Sound Transit. After deficiencies are resolved, reschedule tests.

H. Simulated conditions may need to be imposed using an artificial load when it is not practical to test under design conditions. Provide equipment to simulate loads. Set simulated conditions in accordance with accepted commissioning test procedures as directed by the Testing and Commissioning Manager. Document simulated conditions and methods of simulation. After tests, return settings to normal operating conditions.

I. Request approval to alter set points when simulating conditions is not practical. Request approval to alter sensor values with a signal generator when design or simulating conditions and altering set points are not practical.

J. Where seasonal testing is specified, complete appropriate initial commissioning tests and documentation within the Construction Period. Schedule and execute seasonal tests when specified conditions are expected.

3.02 LEVEL 1 AND LEVEL 2 COMMISSIONING ACTIVITY PROCEDURES

A. Submit Level 1 commissioning activity test procedures and data forms for the following types of commissioning activities, requirements for which are specified herein:

1. Level 1 commissioning activities:

a. Installation verification.

b. Static tests.

c. Start-up procedures.

d. Component tests.

e. Equipment tests.

f. System tests.

2. Level 2 commissioning activities:

a. Intra-station system interface tests.

3.03 LEVEL 1 INSTALLATION VERIFICATION REQUIREMENTS

A. Scope: Installation verification requirements as stated elsewhere in the Contract Documents apply to the following:

1. 2308-IV-01 - Vibration and seismic controls for HVAC piping and equipment.

2. 2308-IV-02 – Instrumentation and control for HVAC.

3. 2308-IV-03 - Refrigerant piping.

4. 2308-IV-04 – Metal ducts.

5. 2308-IV-05 - Air duct accessories.

6. 2308-IV-06 – HVAC fans.

7. 2308-IV-07 - Diffusers, registers and grilles.

8. 2308-IV-08 – Particulate air filtration.

9. 2308-IV-09 - HVAC Insulation.

10. 2308-IV-10 – Air Handling Units.

11. 2308-IV-11 – Split system Air conditioning or heat pump units.

12. [2308-IV-10 – Air-Cooled Chiller/Heat Pumps.]

13. [2308-IV-11 – Hydronic Circulation Pumps.]

14. 2308-IV-12 – Electric heaters.

15. 2308-IV-13 - Electric duct heaters.

B. Installation Verification Checklist is the responsibility of the installing contractor and is required to include the following, at a minimum:

1. Organized to prompt the installer to check off quality criteria for each discrete portion of the Work.

2. Identify the system or features to which the Installation Verification Checklist applies at the top of the form.

3. Section for verification of delivery of approved materials.

4. Section for condition of materials at delivery.

5. Section for description of installation steps. Include manufacturer's installation instructions.

6. Section for start-up. Include start-up instructions and start-up data forms. Use manufacturer's start-up data forms if available.

7. Space at the end of the form for the installer to print their name and company name, fill in the date, and sign or initial.

8. Space at the end of the form for the Quality Control inspector designated for the scope to review and accept installation verification. QC Inspector must perform Install Verification and verify each element identified in form has been reviewed for conformance with contract documents and in accordance with the Contractors Quality Control Inspection and Test Plan as part of Section 01 45 00 – Quality Assessment / Quality Control.

9. Space to identify the area of work for which the installer is executing the Installation Verification Checklist.

10. Description of the quality criteria as it pertains to the specific work. Include a check-box for each criterion.

11. Example checklists/test forms can be provided upon request.

C. Quality Criteria: Installation Verification Checklists shall address the following quality criteria:

1. Make and model match approved submittals.

2. Equipment is installed without visible damage.

3. Location is as indicated on drawings.

4. Equipment is accessible for maintenance using safe work practices.

5. There is sufficient space to remove and replace components intact without demolishing other work.

6. Equipment surfaces are clean and free of dust, dirt, oil and other contaminants.

7. Surfaces exposed to supply and return air flows are as clean as when they were manufactured.

8. Air filters fit tight to avoid air leakage around the filters. Special attention to tight closure of the space between the edges of slide-out filter frames and the access door.

9. Equipment is accessible for adjustment, maintenance, and testing, including replacement of components or the entire assembly.

10. Piping is properly supported and seismically braced.

11. Equipment is installed level or pitched per manufacturer's requirements.

12. Vibration isolation devices are adjusted static deflection and support the equipment level.

13. Before performing a Commissioning Test, installation verification checklists must be performed and completed by QC inspector designated for the appropriate area specified here in and within the Contractors Quality Control Inspection and Test Plan as part of Section 01 45 00 – Quality Assessment / Quality Control. Submit completed Installation Verification Checklists for work included in the Commissioning Test.

D. Fill out, sign, and submit the Installation Verification Checklists for HVAC weekly while the Work is being installed. The intent is to fill out and sign the Installation Verification Checklist as work proceeds to improve the quality of the installation.

3.04 LEVEL 1 COMMISSIONING TESTING REQUIREMENTS

A. Commissioning Testing Scope: Technical requirements for Commissioning Testing of HVAC are specified herein.

B. Provide technicians, instrumentation, and tools to perform Commissioning Tests in accordance with approved Commissioning Test Procedures at the direction of the Testing and Commissioning Manager.

C. Scope of HVAC Commissioning Tests applies to all portions of the HVAC installation described in the test, from central equipment for heat generation and refrigeration through distribution systems to each conditioned space. It shall include measuring capacities and effectiveness of operational and control functions. Where sampling is specified, it applies only to the Commissioning Test Demonstration.

D. Testing Preparation:

1. Certify that HVAC, subsystems, and equipment have been completed, calibrated, and started; are operating according to the Contract Documents.

2. Testing Instrumentation: Install measuring instruments and logging devices to record test data in accordance with approved Commissioning Test Procedures as directed by the Testing Commissioning Manager.

3. Certify that HVAC instrumentation and control systems have been completed and calibrated; are operating according to the Contract Documents; and that pretest set points have been recorded.

4. Set systems, subsystems, and equipment into operating mode to be tested (e.g., normal shut down, normal auto position, normal manual position, unoccupied cycle, emergency power, and alarm conditions) in accordance with approved Commissioning Test Procedures as directed by the Testing and Commissioning Manager.

E. Test all operating modes, interlocks, control responses, responses to abnormal or emergency conditions, and verify proper response of building automation system controllers and sensors.

F. Tests shall be performed using design conditions whenever possible.

G. Simulated conditions may need to be imposed using an artificial load when it is not practical to test under design conditions. Provide equipment to simulate loads. Set simulated conditions in accordance with approved Commissioning Test Procedures as directed by the Testing and Commissioning Manager. Document simulated conditions and methods of simulation. After tests, return settings to normal operating conditions.

H. Request approval to alter set points when simulating conditions is not practical.

I. Request approval to alter sensor values with a signal generator when design or simulating conditions and altering set points are not practical.

J. If tests cannot be completed because of a deficiency outside the scope of the HVAC system, document the deficiency and report it to Sound Transit. After deficiencies are resolved, reschedule tests.

K. Where seasonal testing is specified, complete appropriate initial performance tests and documentation within the Construction Period. Schedule and execute seasonal tests when specified conditions are expected.

3.05 LEVEL 1 COMMISSIONING TEST PROCEDURES

A. Submit Test Procedures and Data Forms for the following types of tests, requirements for which are specified herein:

1. Static Tests.

2. Start-up.

B. The Testing and Commissioning Manager will provide Test Procedures and Data Forms for the following types of tests, requirements for which are specified herein:

1. System and Equipment Testing.

3.06 LEVEL 1 STATIC TEST REQUIREMENTS

A. Static Test checklists are required to include the following, at a minimum:

1. 2308-ST-01: Duct and Duct Accessory Leakage:

a. System/Equipment to be tested:

1) Air handling ducts in accordance with metal ducts requirements as stated elsewhere in the Contract Documents.

b. Functions to be tested:

1) Ductwork and air handling unit casing leakage.

a) ST or Construction Management team must select each class of duct ± 10 percent of site ductwork to be tested. If does not pass leakage test, select additional percent.

b) AHU and ACU operate at 1-inch wg. or higher casing to be tested for leakage.

c) AHU and ACU operating at less than 1-inch wg., casing is not required to be tested for leakage.

d) ACU and FCU not connected to ductwork are not required to be tested for leakage.

c. Conditions of the test:

1) Include in Static Test Procedures and Data Forms submittal:

a) Instrumentation to be used must be able to measure airflow ±5 percent accuracy of the measure leakage airflow rate.

b) Leakage testing plan showing how ductwork will be divided if testing will be performed in sections.

c) Calculations showing the maximum allowable leakage for each unit and for each section of ductwork to be tested.

2) Test in accordance with SMACNA HVAC Air Duct Leakage Test Manual (1st Edition).

3) Seal off each system or section if applicable, securely blanking off inlets and discharges to the section.

4) Attach a formed collar in one of the blank-offs in the section to be tested.

5) Connect a leak test unit to the formed collar. Leak test unit shall include a pressurization fan and calibrated orifice to measure flow.

6) Positively pressurize ductwork and air handling unit casings to the pressures indicated below for each class of ductwork:

a) The test pressure shall be equal to the duct work construction pressure class (highest level if more than one pressure construction class applies to a particular test section).

b) The sealing class shall be as required by the Washington State Energy Code or Authority having Jurisdiction Energy Code.

c) The leakage class and total allowable leakage rate shall be based on the SMACNA dust leakage testing manual charts.

7) Record duct leakage as static pressure differential and corresponding flow rate in CFM using the orifice calibration chart.

8) Air handling units shall be tested to the same criteria as ductwork of the same pressure class.

d. Acceptable Results:

1) Leakage rates are not to exceed the values based on the pressure classifications stated to SMACNA Air Duct Leakage Test Manual, Figure 4.1 (^{2nd} Edition).

2) The following formula shall be used to determine maximum allowable leakage rates per 100 square feet of duct:

$C_L = F/P^{0.65}$

Where:

CL = leakage class and is a constant

F = leakage rate cfm/100 square feet of duct surface

P = static pressure

3) The above criteria shall also apply if the system is tested in sections.

4) Leakage concentrated at one point may result in objectionable noise, even if the system meets the leakage criteria. Locate the point source(s) of noisy leakage and correct the offending condition.

2. [2308-ST-02: Hydronic piping leakage:]

a. [System/Equipment to be Tested:]

1) [Hydronic piping: Refer to the hydronic piping as stated elsewhere in the Contract Documents.]

b. [Functions to be Tested:]

1) [See “Test hydronic piping” as stated elsewhere in the Contract Documents.”]

c. [Conditions of the Test:]

1) [See “Test hydronic piping” as stated elsewhere in the Contract Documents.]

d. [Acceptable Results:]

1) [See “Test hydronic piping” as stated elsewhere in the Contract Documents.]

3. 2308-ST-02: Refrigerant piping leakage:

a. System to be tested:

1) All field installed refrigerant piping.

b. Conditions of the test:

1) Pressure test to 1 ½ times working pressure with compressed air.

2) Provide documentation verifying calibration of test equipment and final results.

3) Repeat procedure as needed until all leaks have been eliminated.

3.07 LEVEL 1 START-UP REQUIREMENTS

A. Start-up checklists are required to include the following, at a minimum:

1. 2308-SU-01: Air Handling Unit (AHU) Start-up:

a. System/Equipment to be tested:

1) Air handling (indoor) units in accordance with the requirements of split system heat pump units as stated elsewhere in the Contract Documents as scheduled.

b. Functions to be tested:

1) Start-up of air handling units.

c. Conditions of the test:

1) Complete 2308-ST-01: Duct and Duct Accessory Leakage with acceptable results before start-up.

2) Air handling units and ductwork shall be clean, and filters installed before start-up.

3) Verify installation and perform startup of units in accordance with manufacturer's written installation and startup procedures.

4) Verify installation and perform startup of units in accordance with startup service requirements for split system air-conditioning units and air-source unitary heat pumps as stated elsewhere in the Contract Documents.

5) Manufacturer-approved personnel shall start-up air handling units in accordance with manufacturer's written procedures. Record results on manufacturer's approved forms.

6) Verify and confirm power supply requirements and motor control equipment under Division 26 Commissioning specification.

d. Acceptable Results:

1) Documented acceptable installation and startup in accordance with manufacturer's requirements.

2. 2308-SU-02: Air Conditioning Unit (ACU) and Compressor Unit (CU) Start-Up

a. System/equipment to be tested:

1) Air conditioning and compressor units in accordance with the requirements of computer room air conditioners and condensers, and split system heat pump units as scheduled.

b. Functions to be tested:

1) Start-up of air conditioning and compressor units.

c. Conditions of the test:

1) Complete 2308-ST-01: Duct and Duct Accessory Leakage with acceptable results before start-up.

2) Air conditioning and compressor units and ductwork shall be clean, and filters installed before start-up.

3) Verify installation and perform startup of units in accordance with manufacturer's written installation and startup procedures.

4) Verify installation and perform startup of units in accordance with startup service requirements for computer room air conditioners and condensers, split system air-conditioning units, rooftop heat pump units and air-sourced unitary heat pump as stated elsewhere in the Contract Documents.

5) Manufacturer-approved personnel shall start-up air handling units in accordance with manufacturer's written procedures. Record results on manufacturer's approved forms.

6) Verify and confirm power supply requirements and motor control equipment under Division 26 Commissioning specification.

d. Acceptable Results:

1) Documented acceptable installation and startup in accordance with manufacturer's requirements.

3. [2308-SU-03: Air-Cooled Chiller/Heat Pumps:]

a. [System/Equipment to be Tested:]

1) [Air-Cooled Chiller/Heat Pumps in accordance with the requirements of Air-Cooled Chiller/Heat Pumps as stated elsewhere in the Contract Documents as scheduled.]

b. [Functions to be Tested:]

1) [Start-up of Air-Cooled Chiller/Heat Pumps.]

c. [Conditions of the Test:]

1) [Verify installation and perform startup of units in accordance with manufacturer's written installation and startup procedures.]

2) [Verify installation and perform startup of units in accordance with startup service requirements for Air-Cooled Chiller/Heat Pumps as stated elsewhere in the Contract Documents.]

3) [Manufacturer-approved personnel shall start-up Air-Cooled Chiller Heat Pumps in accordance with manufacturer's written procedures. Record results on manufacturer's approved forms.]

4) [Verify and confirm power supply requirements and motor control equipment under Division 26 Commissioning specification.]

d. [Acceptable Results:]

1) [Documented acceptable installation and startup in accordance with manufacturer's requirements.]

4. [2308-SU-04: Hydronic Circulation Pumps:]

a. [System/Equipment to be Tested:]

1) [Hydronic Circulation Pumps in accordance with the requirements of Circulation Pumps as stated elsewhere in the Contract Documents as scheduled.]

b. [Functions to be Tested:]

1) [Start-up of Hydronic Circulation Pumps.]

c. [Conditions of the Test:]

1) [Verify installation and perform startup of units in accordance with manufacturer's written installation and startup procedures.[

2) [Verify installation and perform startup of units in accordance with startup service requirements for Air-Cooled Chiller/Heat Pumps as stated elsewhere in the Contract Documents.]

3) [Manufacturer-approved personnel shall start-up Hydronic Circulation Pumps in accordance with manufacturer's written procedures. Record results on manufacturer's approved forms.]

4) [Verify and confirm power supply requirements and motor control equipment under Division 26 Commissioning specification.]

d. [Acceptable Results:]

1) [Documented acceptable installation and startup in accordance with manufacturer's requirements.]

5. 2308-SU-03: Fan Start-Up:

a. System/equipment to be tested:

1) Fans in accordance with HVAC fans requirements as stated elsewhere in the Contract Documents as scheduled.

b. Functions to bet:

1) Start-up of fans.

c. Conditions of the test:

1) Complete 2308-ST-01: Duct and Duct Accessory Leakage with acceptable results before start-up.

2) Exhaust fans and ductwork shall be clean, and filters installed before start-up.

3) Verify installation and perform startup of units in accordance with manufacturer's written installation and startup procedures.

4) Verify installation and perform startup of units in accordance with startup service requirements of HVAC fans as stated elsewhere in the Contract Documents.

5) Manufacturer-approved personnel shall start-up air handling units in accordance with manufacturer's written procedures. Record results on manufacturer's approved forms.

6) Verify and confirm power supply requirements and motor control equipment under Division 26 Commissioning specification.

d. Acceptable Results:

1) Documented acceptable installation and startup in accordance with manufacturer's requirements.

3.08 LEVEL 1 COMPONENT TESTING REQUIREMENTS

A. Component Testing checklists are required to include the following, at a minimum:

1. 2308-C-01: Backdraft Dampers:

a. System/Equipment to be tested:

1) Backdraft dampers in accordance with the requirements of air duct accessories as stated elsewhere in the Contract Documents.

b. Functions to be tested:

1) Tight closure against backdraft.

2) Low resistance to forward flow.

c. Conditions of the test: Systems in which backdraft dampers are installed shall operate at their normal flow rates, pressures, and temperatures during the test. During test continuously monitor static pressure difference between locations immediately upstream and downstream of damper.

1) Start the fan connected to the duct in which the damper is mounted. Observe damper operation.

2) Stop the fan. Observe damper operation.

3) Create a backdraft at the damper location. Observe damper operation.

d. Acceptable Results:

1) When the fan runs, the damper begins to open at less than 0.02 inches water gauge pressure drop. The damper opens completely with less than 0.2 inches water gauge pressure drop.

2) With the fan off, the damper closes completely.

3) The damper remains closed under backdraft conditions.

2. 2308-C-02: Fire Dampers:

a. System/Equipment to be tested:

1) Fire dampers in accordance with the requirements of air duct accessories as stated elsewhere in the Contract Documents.

b. Functions to be tested:

1) Fire damper accessibility.

2) Fire damper operation.

c. Conditions of the test: Systems in which dampers are installed shall operate at their normal flow rates and temperatures during the test.

1) With fan system operating in normal mode, remove the fusible link from fire dampers, allowing them to close unassisted. When satisfactory operation has been verified, reopen dampers and reinstall the fusible links.

d. Acceptable Results:

1) Dampers close tight immediately upon release of the fusible link, without intervention or assistance. Dampers and fusible links are accessible.

3. 2308-C-03: Combination Fire/Smoke Dampers:

a. System/Equipment to be tested:

1) Combination fire and smoke dampers in accordance with the requirements of air duct accessories as stated elsewhere in the Contract Documents.

b. Functions to be tested:

1) Combination fire and smoke damper accessibility.

2) Combination fire and smoke damper operation.

3) For commandable combination fire/smoke dampers perform the following testing.

a) Time taken for damper blades to close.

b) Damper blades close upon loss of AC power.

c. Conditions of the test: Systems in which combination fire and smoke dampers are installed shall operate at their normal flow rates and temperatures during the test.

1) With fan system operating in normal mode, expose duct smoke detectors to smoke.

2) Clear the smoke and reset the smoke detectors.

[Designer: For room protected by clean agent, FSD must be closed by room clean agent control panel in accordance with NFPA 2001.]

3) Actuate the heat link on combination fire and smoke dampers, allowing them to close unassisted. When satisfactory operation has been verified, reopen dampers and reset the heat links.

a) Prior to executing conditions listed below for the combination fire/smoke dampers, disconnect control signal. Observe the position of the damper and of the controlled device.

b) Prior to executing conditions listed below for the combination fire/smoke dampers disconnect power. Observe the position of the actuator and of the controlled device.

c) During tests listed below for the combination fire/smoke dampers, actuator shall be connected to the output terminal of the controller as required for final, permanent installation. If for any reason, the connection of the actuator to the controller is opened prior to Functional Completion, this test shall be repeated.

d) Initiate commands from supervisory logic controller.

e) Command fire/smoke damper full open; observe response of actuator; directly observe position of damper blade(s) and the position of the damper shaft end marking.

f) Command damper full closed; observe response of actuator; directly observe position of damper blade(s).

d. Acceptable Results:

1) Upon loss of control signal or control power, actuator drives combination fire/smoke dampers close.

2) When commanded open, the actuator fully opens the damper; all damper blades and damper sections; damper shaft end marking corresponds with damper position.

3) When commanded closed, the actuator fully closes the damper; damper blades are observed to be fully closed.

4) Dampers close tight upon activation in accordance to UL555S.

5) Dampers open fully upon activation in accordance UL 555S.

6) Dampers close tight immediately upon actuation of the heat link, without intervention or assistance.

4. 2308-C-04: Motorized Dampers (MDPR):

a. System/equipment to be tested:

1) Motorized Dampers (per plans), actuators and associated controls in accordance with the requirements of instrumentation and control for HVAC as stated elsewhere in the Contract Documents as scheduled.

b. Functions to be tested:

1) Damper operation.

2) Time taken for dampers to actuate.

3) Damper accessibility.

4) Performance of actuator in the absence of control signal.

5) Normal position of actuator in the absence of control power.

6) Actuator response to control signals.

7) Damper modulation, for modulating dampers

c. Conditions of the test:

1) Prior to executing conditions listed below for this equipment, disconnect control signal. Observe the position of the actuator and of the controlled device.

2) Prior to executing conditions listed below for this equipment, disconnect power. Observe the position of the actuator and of the controlled device.

3) During tests listed below for this equipment, actuator shall be connected to the output terminal of the controller as required for final, permanent installation. If for any reason, the connection of the actuator to the controller is opened prior to Functional Completion, this test shall be repeated.

4) Initiate commands from the operator's terminal or supervisory logic controller.

5) Controlled fluids shall be flowing at or near design temperature, velocity and pressure.

6) Command damper full open; observe response of actuator; directly observe position of damper blade(s) and the position of the damper shaft end marking.

7) Command damper full closed; observe response of actuator; directly observe position of damper blade(s) or measure and record flow in circuit controlled by damper.

8) For modulating damper, command damper to 20 percent open; observe damper response.

9) For modulating damper, command damper to 60 percent open; observe damper response.

d. Acceptance Criteria:

1) Upon loss of control signal or control power, actuator drives controlled device to specified position.

2) When commanded open, the actuator fully opens the damper; all damper blades and damper sections; damper shaft end marking corresponds with damper position.

3) When commanded closed, the actuator fully closes the damper; damper blades are observed to be fully closed, or flow volume is observed to be zero.

4) Dampers close tight upon activation within 10 seconds.

5) Dampers open fully upon activation within 10 seconds.

6) When commanded 20 percent open, the actuator opens the damper approximately 20 percent.

7) When commanded 60 percent open, the actuator opens the damper approximately 60 percent.

5. 2308-C-05: Temperature Sensors and Transmitters:

a. System/equipment to be tested:

1) RTD and thermistor temperature sensors and transmitters in accordance with the requirements of instrumentation and control for HVAC as stated elsewhere in the Contract Documents.

b. Functions to be tested:

1) Accuracy of calibration.

c. Conditions of the test:

1) Compare temperature indication at Operator Workstation with calibration-grade instrument temperature when subjected to the same steady-state conditions at the following temperatures.

a) At or near the high limit of the normal operating range to which the sensor will be subjected. Bench test is acceptable.

b) At or near the low limit of the normal operating range to which the sensor will be subjected. Bench test is acceptable.

c) With the sensor installed in its final, permanent position, compare the temperatures indicated by the sensor and the calibrator at midrange of the normal operating condition.

2) Exception: For room temperature sensors, compare at room temperature not greater than 70 degrees Fahrenheit. Demonstrate a random sample of 15 percent of room temperature sensors.

d. Acceptance Criteria:

1) For conditions 1) and 2), temperature indication at Operator Workstation shall be within plus/minus 0.5 degree Fahrenheit of the calibration-grade instrument temperature. For condition 3), temperature indication at Operator Workstation shall be within plus/minus 1.0 degrees Fahrenheit of the calibration-grade instrument temperature.

2) Room temperature sensor temperature indication at Operator Workstation shall be within plus/minus 0.5 degrees Fahrenheit of the calibration-grade instrument temperature. If the Contractor fails to demonstrate acceptable results for all sample sensors, the sample will be rejected and the Contractor shall, after making corrections, demonstrate a repeat sample of double the number

of sensors in the failed sample, at no additional cost to Sound Transit.

6. 2308-C-06: Pressure Transmitters/Transducers:

a. System/equipment to be tested:

1) Pressure transmitters/transducers used for air static pressure, water pressure, water differential pressure, and status sensors in accordance with the requirements of instrumentation and control for HVAC as stated elsewhere in the Contract Documents.

[Designer: Follow manufacturer instructions when air filter pressure sensors are supplied with the units.]

b. Functions to be tested:

1) Accuracy of calibration.

c. Conditions of the test: All systems, equipment, and components shall be complete and functional at the time of this test:

1) Compare temperature indication at Operator Workstation with calibration-grade instrument pressure when subjected to the same steady-state conditions at the following pressures:

a) At or near the high limit of the normal operating range to which the sensor will be subjected. Bench test is acceptable.

b) At or near the low limit of the operating range to which the sensor will be subjected. Bench test is acceptable.

c) With the sensor installed in its final, permanent position, compare the pressures indicated by the sensor and the calibrator at midrange of the normal operating condition.

d. Acceptance Criteria:

1) At all conditions, error is less than plus or minus 1.2 percent of full scale.

7. 2308-C-07: Status Sensors:

a. System/equipment to be tested:

1) Status sensors in accordance with the requirements of instrumentation and control for HVAC as stated elsewhere in the Contract Documents.

b. Functions to be tested:

1) Accuracy of change of status indication.

c. Conditions of the test: All systems, equipment, and components shall be complete and functional at the time of this test:

1) Execute this test after completion of testing, adjusting, and balancing for the associated fan.

2) For fans:

a) Operate fan at lowest design flow as balanced. Adjust sensor to indicate fan running at a differential pressure approximately 10 percent below differential pressure at low design flow as balanced.

b) Shut down fan.

c) Restart fan.

d. Acceptance Criteria:

1) For Fans:

a) Operator Workstation indicates fan is running.

b) Operator Workstation indicates fan is stopped.

c) Operator Workstation indicates fan is running.

8. 2308-C-08: Heaters and Duct Heaters:

a. Equipment to be tested:

1) Wall mounted room heaters and ductwork mounted heaters.

b. Functions to be tested:

1) Enabling and disabling of heaters based on internal thermostats or duct mounted thermostats.

2) Change in air temperature during operation (Duct Heaters only).

3.09 LEVEL 1 EQUIPMENT TESTING REQUIREMENTS

A. Equipment checklists are required to include the following, at a minimum:

1. 2308-E-01: Air Handling Unit Control (AHU):

a. Equipment to be tested:

1) Air handling (indoor) units in accordance as scheduled elsewhere in the Contract Documents:

b. Functions to be tested:

c. Starting and stopping by local control Acceptance Criteria:

1) All functions and communications indicated in the sequence of operation operate correctly. Refer to the control diagrams on Mechanical -HVAC Contract Drawings for sequences of operation. Drawing numbers vary for stations and facilities.

2) All integral manufacturer's controls shall operate correctly per the manufacturer's sequence of operation and safety responses.

2. 2308-E-02: Fan Control:

a. System/equipment to be tested:

1) Fans in accordance with HVAC fans as stated elsewhere in the Contract Documents as scheduled.

b. Functions to be tested:

1) Starting and stopping by local control.

c. Acceptance Criteria:

1) All functions and communications indicated in the sequence of operation operate correctly. Refer to the control diagrams on Mechanical -HVAC Contract Drawings for sequences of operation. Drawing numbers vary for stations.

3. 2308-E-03: Air Conditioning Unit (ACU) and Compressor Unit (CU) Control:

a. System/equipment to be tested:

1) Air conditioning and compressor units in accordance with split-system heat pump units as stated elsewhere in the Contract Documents and as scheduled.

b. Functions to be tested:

1) Starting and stopping by local control.

c. Acceptance Criteria:

1) All functions and communications indicated in the sequence of operation operate correctly. Refer to the control diagrams on Mechanical -HVAC Contract Drawings for sequences of operation. Drawing numbers vary for stations and facilities.

d. All integral manufacturer's controls shall operate correctly per the manufacturer's sequence of operation and safety responses.

4. 2308-E-04: Electric Heaters Control:

a. System/equipment to be tested:

1) Electric Heaters in accordance with electric heaters requirements as stated elsewhere in the Contract Documents.

b. Functions to be tested:

1) Starting and stopping by local control.

c. Conditions of the test:

1) Refer to plan sheets for sequence of operations.

d. Acceptance Criteria: All functions and communications indicated in the sequence of operation operate correctly.

3.10 LEVEL 1 SYSTEM TESTING REQUIREMENTS

A. Systems checklists are required to include the following, at a minimum:

1. 2308-S-01: Air moving Systems Sequences of Operation:

a. Systems to be tested:

1) All air moving systems and associated equipment listed in the Equipment Testing Requirements.

b. Systems functions to be tested:

1) Sequence of Control including all integral manufacturer's controls (controls that are provided as part of the equipment).

c. Conditions of the test:

1) Refer to the control diagrams on Mechanical -HVAC Contract Drawings for sequences of operation. Drawing numbers vary for stations, garages, and facilities.

d. Acceptance Criteria:

1) All functions and communications indicated in the sequence of operation operate correctly.

2. [2308-S-02 Hydronic Systems Sequence of Operation:]

a. [Systems to be tested:]

1) [All hydronic circulation systems and associated equipment listed in the Equipment Testing Requirements.]

b. [Systems functions to be tested:]

1) [Sequence of Control including all integral manufacturer's controls (controls that are provided as part of the equipment).]

c. [Conditions of the test:]

1) [Refer to the control diagrams on Mechanical -HVAC Contract Drawings for sequences of operation. Drawing numbers vary for stations, garages, and facilities.]

d. [Acceptance Criteria:]

1) All functions and communications indicated in the sequence of operation operate correctly.]

3. 2308-S-03: Verification of Testing, Adjusting, and Balancing for HVAC:

a. System/equipment to be tested:

1) Equipment and systems included in the testing, adjusting, and balancing for HVAC as stated elsewhere in the Contract Documents.

b. Functions to be tested:

1) Verification of final report of testing, adjusting, and balancing (TAB) data and measured TAB data.

c. Conditions of the test:

1) Commissioning Test Demonstration: Present a copy of final TAB report. The final TAB report consists of final TAB field data forms, after systems have been balanced within the tolerances of testing,

adjusting, and balancing for HVAC as stated elsewhere in the Contract Documents, but before they are “cleaned up” for submittal as the final TAB report.

2) Commissioning Test Demonstration: Repeat readings in the presence of Sound Transit’s Witness of a sample of 10 percent of the data recorded in the pre-final TAB report.

3) Commissioning Garage Ventilation: Garage supply and exhaust fans shall be balanced to match performance at a given level during air balancing.

4) Commissioning Test Demonstration: Sound Transit’s Witness will select the sample at the time of the test.

d. Acceptance Criteria:

1) Commissioning Test Demonstration: Not more than 20 percent of the sampled readings shall deviate by more than 10 percent from the recorded readings in the pre-final TAB report.

2) Commissioning Test Demonstration: No sample readings shall deviate by more than 15 percent from the recorded readings in the pre-final TAB report.

3) Commissioning Test Demonstration: If the pre-final TAB report is rejected for excessive deviation between readings and reported conditions, make corrections to the system balance at no additional cost to Sound Transit. When corrections are complete, notify the A/E in writing that the system is ready for revalidation. Reimburse Sound Transit for direct expenses incurred as the result of repeating the validation process.

3.11 LEVEL 2 INTRA-STATION SYSTEM INTERFACE TESTING REQUIREMENTS

A. 2308-IS-01: Air Handling Unit (AHU) and Dampers Control Interface with BMS and Fire Alarm System (FA):

1. System/equipment to be tested:

B. Air handling indoor or outdoor units in accordance as scheduled elsewhere in the Contract Documents:

C. Combination fire and smoke dampers (FSD) in accordance with the requirements of air duct accessories as stated elsewhere in the Contract Documents.

D. Motorized Dampers (MDPR) in accordance with the requirements of instrumentation and control for HVAC as stated elsewhere in the Contract Documents as scheduled.

1. System Function to be tested:

a. Normal Operation: AHU start and stop by local control and open/close MDPR/FSD remotely by BMS.

1) FA Shutdown Operation:

2) AHU Fans and Supply/Exhaust Fans (SFAN/EFAN) shutdown by duct smoke detector and FA closed FSD/MDPR serving the protected area.

[Notes to EOR: For Space Protected by Clean Agent: AHU Fans and SFAN/EFAN shutdown and close MDPR by BMS and FA closed FSD serving the protected area.]

3) Operation under emergency power, where applicable.

2. Acceptance Criteria:

a. All functions and communications indicated in the sequence of operation operate correctly. Refer to the control diagrams on Mechanical -HVAC Contract Drawings for sequences of operation. Drawing numbers vary for stations and facilities.

b. All integral manufacturer's controls shall operate correctly per the manufacturer's sequence of operation and safety responses.

c. AHU Fans and SFAN/EFAN start and stop in accordance with BMS command or stop by smoke detector or FA. FSD/MDPR open/close in accordance with BMS command or smoke detector or FA.

d. FSD: FA and LOS report the alarm. Combination fire and smoke dampers close. Supply (and return) fan(s) stop. After the appropriate time delay, outside (and return) air dampers close.

e. For equipment provided with emergency electrical power service, the BMS and fan equipment automatically restart after power is transferred to an emergency power source without nuisance alarms or the need for operator intervention. When normal power is restored and power is transferred back to the normal power source, the BMS and fan equipment continue to operate without nuisance alarms or the need for operator intervention.

E. 2308-IS-02: Air Conditioning Unit (ACU) and Compressor Unit (CU) Control Interface with BMS and FA:

1. System/equipment to be tested:

a. Air conditioning and compressor units in accordance with split-system heat pump units as stated elsewhere in the Contract Documents and as scheduled.

b. Combination fire and smoke dampers (FSD) in accordance with the requirements of air duct accessories as stated elsewhere in the Contract Documents.

c. Motorized Dampers in accordance with the requirements of instrumentation and control for HVAC as stated elsewhere in the Contract Documents as scheduled.

2. System Function to be tested:

a. Normal Operation: ACU/CU start/stop and dampers open/close by local control and remotely by BMS.

3. FA Shutdown Operation:

a. ACU Fans and Supply/Exhaust Fans (SFAN/EFAN) shutdown by duct smoke detector and FA closed FSD serving the protected area.

[Notes to EOR: For Space Protected by Clean Agent: ACU Fans and SFAN/EFAN shutdown by BMS and FA closed FSD serving the protected area.]

4. Operation under emergency power, where applicable.

a. Acceptance Criteria

1) All functions and communications indicated in the sequence of operation operate correctly. Refer to the control diagrams on Mechanical -HVAC Contract Drawings for sequences of operation. Drawing numbers vary for stations and facilities.

2) All integral manufacturer's controls shall operate correctly per the manufacturer's sequence of operation and safety responses.

3) ACU Fans and SFAN/EFAN start and stop in accordance to BMS command or stop by smoke detector or FA. FSD/MDPR open/close in accordance to BMS command or smoke detector or FA.

4) For equipment provided with emergency electrical power service, the BMS and fan equipment automatically restart after power is transferred to an emergency power source without nuisance alarms or the need for operator intervention. When normal power is restored and power is transferred back to the normal power source, the BMS and fan equipment continue to operate without nuisance alarms or the need for operator intervention.

F. 2308-IS-03: Supply Fan (SFAN) and Exhaust Fan (EFAN) Control Interface with BMS and Fire Alarm

1. System/equipment to be tested:

a. Fans in accordance with HVAC fans as stated elsewhere in the Contract Documents as scheduled.

2. System Function to be tested:

a. Starting and stopping remotely by BMS or Fire Alarm Control Panel (FACP) when smoke detector(s) is install in return air duct serving by this fan.

b. Operating under emergency power, where applicable.

3. Acceptance Criteria:

a. All functions and communications indicated in the sequence of operation operate correctly. Refer to the control diagrams on Mechanical -HVAC Contract Drawings for sequences of operation. Drawing numbers vary for stations and facilities.

b. Fan start and stop in accordance with BMS command or stop by smoke detector/FACP.

c. For fan provided with emergency electrical power service, the BMS and fan equipment automatically restart after power is transferred to an emergency power source without nuisance alarms or the need for operator intervention. When normal power is restored and power is transferred back to the normal power source, the BMS and fan continue to operate without nuisance alarms or the need for operator intervention.

G. 2308-IS-04: Electric Heaters Control

1. System/equipment to be tested:

    a. Electric Heaters in accordance with electric heaters requirements as stated elsewhere in the Contract Documents.

2. System Function to be tested:

    a. Starting and stopping remotely by BMS.

    b. Operation under emergency power, where applicable.

3. Conditions of the test:

    a. All functions and communications indicated in the sequence of operation operate correctly. Refer to the control diagrams on Mechanical -HVAC Contract Drawings for sequences of operation. Drawing numbers vary for stations and facilities.

4. Acceptance Criteria:

    a. All functions and communications indicated in the sequence of operation operate correctly. For equipment provided with emergency electrical power service, the BMS and fan equipment automatically restart after power is transferred to an emergency power source without nuisance alarms or the need for operator intervention. When normal power is restored and power is transferred back to the normal power source, the BMS and fan equipment continue to operate without nuisance alarms or the need for operator intervention.

H. 2308 IS-05: Hydronic Systems Control Interface with BMS:

1. System/equipment to be tested:

    a. Hydronic systems equipment to operate as stated elsewhere in the Contract Documents and as scheduled.

2. System Function to be tested:

    a. Hydronic systems equipment start/stop by local control and remotely by BMS.

    b. Operating under emergency power, where applicable.

3. Acceptance Criteria:

    a. All functions and communications indicated in the sequence of operation operate correctly. Refer to the control diagrams on Mechanical -HVAC Contract Drawings for sequences of operation. Drawing numbers vary for stations, and facilities.

    b. All integral manufacturer's controls shall operate correctly per the manufacturer's sequence of operation and safety responses.

    c. Hydronic equipment starts and stops in accordance to BMS command.

    d. For equipment provided with emergency electrical power service, the BMS and hydronic equipment automatically restart after power is transferred to an emergency power source without nuisance alarms or the need for operator intervention. When normal power is restored and power is

transferred back to the normal power source, the BMS and continue to operate without nuisance alarms or the need for operator intervention.

3.12 LEVEL 1 AND LEVEL 2 TEST REQUIREMENTS MATRIX

	2308-IV-0X	2308-ST-0X	2308-SU-0X	2308-C-0X	2308-E-0X	2308-S-0X	2308-IS-0X
Vibration and seismic controls for HVAC piping and equipment	X						
Instrumentation and control for HVAC	X						
Refrigerant piping	X	X					
Hydronic Piping		X					
Metal ducts	X	X					
Air duct accessories	X						
HVAC fans	X						
Diffusers, registers and grilles	X						
Particulate air filtration	X						
HVAC Insulation	X						
Split system Air Conditioning or heat pump units	X						
Air-Cooled Chiller/Heat Pumps	X		X				
Hydronic Circulation Pumps	X		X				
Electric heaters	X			X	X		X
Electric duct heaters	X			X			
Air Handling Unit	X		X		X		X
Air Conditioning and Compressor Unit			X		X		X
Fan Start -UP			X				
Backdraft Dampers				X			
Fire Dampers				X			
Combination Fire/Smoke Dampers				X			
Motorized Dampers				X			
Temperature Sensors and Transmitters				X			
Pressure Transmitters/Transducers				X			
Status Sensors				X			
Fan Control					X		X
Air Moving Systems Sequences of Operation						X	
Hydronic Systems Sequence of Operation					X		X
Verification of Testing, Adjusting, and Balancing for HVAC						X	

[DESIGNER: ADD OR MODIFY MATRIX AS NECESSARY BASED ON TESTS ADDED OR MODIFIED ABOVE DEPENDING UPON THE DESIGN FOR HVAC SYSTEM]

END OF SECTION

EXHIBITS (On Proceeding Pages)

1. EXHIBIT A – Sample Test Form

EXHIBIT A - SAMPLE TEST FORM

Test No. xxx-2308-IV-xx.xx

Project Name: xxxxxx xxxxx HVAC Fans

Test Rev 1.0 – 12/01/2023 Specification Section 23 34 00

☐ First Test ☐ PASS Test Date: _____

☐ Repeat Test ☐ FAIL

OBJECTIVES:

A. Verify that the HVAC fans installed per the manufacturer's installation directions and design document requirements.

EQUIPMENT TO BE TESTED:

Equipment ID	Description
N/A	HVAC inline supply and exhaust fans

REFERENCE DOCUMENTS:

Document
Drawings:
Specification Sections:
Submittals:

TEST PRE-REQUISITES:

Activity	Notes	Completed?	
		Yes	No
None		☐	☐
		☐	☐
Notes: (1)			

MINIMUM PARTICIPANTS:

Participant	Notes	Required?	
		Yes	No
Installing contractor		☒	☐

MINIMUM PARTICIPANTS:

Sound Transit site quality inspector		☐	☐
Notes: (1)			

REQUIRED INSTRUMENTATION AND EQUIPMENT:

Instrument or Equipment						Notes	Provided Instrumentation meets Requirements?	
Type or Sensed Parameter	Manufacturer	Model	Range	Accuracy	Calibration Date/ Next Cal. Due		Yes	No
None				±	/		☐	☐
				±	/		☐	☐
Notes: (1)								

CONDITIONS AT TIME OF TESTING:

AREA OF WORK:

Area in Which Work will be Conducted:
Parking garage, bridge, and abutment areas.
Notes: (1)

ISSUES DISCOVERED AND PROPOSED RESOLUTIONS:

No.	Issue	Proposed Resolution

ISSUES DISCOVERED AND PROPOSED RESOLUTIONS:

Notes: (1)		

SIGNATURES:

Company	Printed Name	Signature	Date
Installing Contractor:			
Quality Control			
Other Witness:			

INSTALLATION VERIFICATION CHECKLIST – GENERAL

No.	Checklist Item	Notes	Pass?		Date
			Yes	No	
1.1	Conditions of materials at time of delivery is acceptable:		☐	☐	
1.2	The make and model of the materials and/or equipment matches the product submittals:		☐	☐	
1.3	The installed materials and/or equipment does not have visible damage, including finishes:		☐	☐	

INSTALLATION VERIFICATION CHECKLIST – GENERAL

No.	Checklist Item	Notes	Pass? Yes	Pass? No	Date
1.4	The equipment and/or distribution materials matches the locations shown on the design drawings:		☐	☐	
1.5	The equipment and/or distribution materials matches the locations shown on the as-built drawings:		☐	☐	
1.6	The manufacturer's recommended and required maintenance clearances are maintained:		☐	☐	

Notes:

(1)

INSTALLATION VERIFICATION CHECKLIST – IN-LINE FANS

No.	Checklist Item	Notes	Pass? Yes	Pass? No	Date
	MANUFACTURER'S INSTALLATION INSTRUCTIONS				
1.1	Verify that the installation follows all directions and recommendations per the attached manufacturer's installation directions:		☐	☐	

Notes:

(1)

	HVAC IN-LINE FANS										
2.1	The equipment is installed level and plumb.									☐	☐	
2.2	Isolation hangers are adjusted to level the unit as well as adjusted for proper seismic snubber gap (1/4") and to prevent the rod hanger from short circuiting (by contacting the rod to the spring hanger housing)									☐	☐	
2.3	The motor is readily accessible for maintenance and inspection.									☐	☐	
2.4	The fan is supported independently from appropriate building structure.									☐	☐	

INSTALLATION VERIFICATION CHECKLIST – IN-LINE FANS

No.	Checklist Item	Notes	Pass? Yes	Pass? No	Date
2.5	Seismic bracing is installed and verified to be correct.		☐	☐	
2.6	Electrical clearances at motor connections are per NEC (36” clear minimum)		☐	☐	
2.7	Access doors are provided in the ductwork per specification.		☐	☐	
2.8	The unit permanent ID tag is installed securely.		☐	☐	
2.9			☐	☐	
2.10			☐	☐	

Notes:

(1)

END OF EXHIBITS

SECTION 23 41 00

PARTICULATE AIR FILTRATION

PART 1 - GENERAL

1.01 SUMMARY

A. Section includes:

1. Requirements for factory-fabricated air-filter devices and media used to remove particulate matter from air for HVAC applications.

1.02 REFERENCES

A. This Section incorporates by reference the latest revisions of the following documents.

1. Air-Conditioning and Refrigeration Institute (ARI):

a. ARI 850 Performance Rating of Commercial and Industrial Air Filter Equipment.

2. American Society of Heating, Refrigeration, and Air Conditioning Engineers (ASHRAE):

a. ASHRAE 52.1 Gravimetric and Dust-Spot Procedures for Testing Air-Cleaning Devices Used in General Ventilation for Removing Particulate Matter.

b. ASHRAE 52.2 Method of Testing General Ventilation Air-Cleaning Devices for Removal Efficiency by Particle Size.

3. International Code Council:

a. Current International Mechanical Code with state and local amendments.

4. National Fire Protection Association (NFPA):

a. NFPA 70 National Electric Code.

b. NFPA 90A Standard for the Installation of Air Conditioning and Ventilating Systems.

c. NFPA 90B Standard for the Installation of Warm Air Heating and Air-Conditioning Systems.

1.03 SUBMITTALS

A. Submit the following:

1. Shop Drawings: Include plans, elevations, sections, and details to illustrate component assemblies and attachments.

a. Show filter rack assembly, dimensions, materials, and methods of assembly of components.

B. Include setting drawings, templates, and requirements for installing anchor bolts and anchorages. Transmit the following:

1. Product Data: Include dimensions; required clearances and access; rated flow capacity, including initial and final pressure drop at rated airflow; efficiency and test method; fire classification; furnished specialties; and accessories for each unit indicated.

2. Operation and maintenance data.

1.04 QUALITY ASSURANCE

A. Electrical Components, Devices, and Accessories: Listed and labeled as defined in NFPA 70, Article 100, by an Independent Testing Laboratory acceptable to authorities having jurisdiction and marked for intended use.

B. Comply with ARI 850.

C. Comply with ASHRAE 52.1 and ASHRAE 52.2 for method of testing and rating air-filter units.

D. Comply with NFPA 90A and NFPA 90B.

E. Regulatory Requirements: Comply with all applicable City, County, and State Codes and ordinances. In case of conflict with drawings or specifications, the codes and ordinances govern.

PART 2 - PRODUCTS

2.01 MANUFACTURERS

A. Available Manufacturers: Subject to compliance with requirements, manufacturers offering products that may be incorporated into the Work include, but are not limited to, the following:

1. AAF International.

2. Air Filter International.

3. Airguard Industries, Inc.

4. Barnebey & Sutcliffe Corp.

5. Columbus Industries, Inc.

6. CRS Industries, Inc.; CosaTron Div.

7. D Mark Inc.

8. Farr Co.

9. Flame Gard, Inc.

10. Flanders/CSC Corp.

11. Flanders Filters, Inc.

12. General Filters Inc.

13. International Air Filtration Corporation Koch Filter Corporation.

14. LakeAir International, Inc.

15. NiCon Filter Corp.; Continental Air Filter Div.

16. Purafil, Inc.

17. Research Products Corp.

B. Air Filtration:

1. Supply air units shall be provided with replaceable media filters arranged in banks as appropriate with holding frames. Air filter media shall be rated UL Class I. Filters shall be 30 percent MERV 7 unless scheduled otherwise.

2. Filter shall not be less than MERV 4 for ductless mini-split systems.

3. Where shown on plans, use MERV 7 prefilters upstream of MERV 13 final filters. Frame shall be galvanized steel with filter sealing gasket and fasteners. Fans shall be sized for design airflow with filters as scheduled.

4. Air handling units with outside air intake or dedicated outside air units shall be provided with a filter box capable of housing a filter with minimum of MERV 13 as indicated on drawings or as required by the AHJ. Units that condition and recirculate room air do not require MERV 13 filter box.

5. A high pressure drop alarm shall be transmitted to the Building Management System for ducted systems, where noted on the control diagrams.

C. Filter Box:

1. Provide in-line galvanized steel filter box with minimum 4” filter slot as scheduled on drawings. Filter box shall include snap clips and access door for removal of filter. Famco or equal. Provide with filter sizes as scheduled.

PART 3 - EXECUTION

3.01 INSTALLATION

A. Position each filter unit with clearance for normal service and maintenance. Anchor filter holding frames to substrate.

B. Install temporary filters during construction period. Replace with permanent filters at Substantial Completion.

C. Install filters in position to prevent passage of unfiltered air.

D. Install filter-boxes to be in-line in the ductwork upstream of protected equipment. Provide required flanges and accessories to attach to upstream and downstream ducts.

E. Coordinate filter installations with duct and HVAC unit installations.

3.02 COMMISSIONING

A. Commissioning particulate air filtration as required elsewhere in the Contract Documents.

END OF SECTION

SECTION 25 08 50

COMMISSIONING OF FACILITY CONTROLS

NOTE TO DESIGNER:

SECTIONS WITH BRACKETS. E.G., [TEXT] ARE TO BE MODIFIED OR DELETED IF NOT APPLICABLE. ITALICIZED TEXT PROVIDES INSTRUCTION TO THE DESIGNER TO INCLUDE LANGUAGE ON SPECIFIC TOPICS WHEN APPLICABLE. THE INSTRUCTIONS ARE TO BE DELETED WHEN THE SPECIFICATION IS FINALIZED. LANGUAGE NOT IN BRACKETS IS TO BE USED AS IS WITHOUT MODIFICATION OR WITH AN APPROVED SPECIFICATION MODIFICATION REQUEST.

DESIGNER TO DELETE TEXT ABOVE FOR FINAL SECTION

PART 1 - GENERAL

1.01 SUMMARY

A. Section Includes:

1. Requirements for the commissioning process for Facility and Garage Building Management System (BMS):

a. Level 1 commissioning activities for BMS.

b. Level 2 commissioning activities for interface verification between systems within this Contract.

c. Support for Level 3 commissioning activities for interface verification between systems provided under this Contract with systems provided by others.

d. Support for Level 4 commissioning activities related to pre-revenue testing.

B. Any LEED execution requirements for commissioning of BMS are in accordance with the LEED certification requirements (including the LEED specifications matrix requirements) as stated in the Contract Documents.

1. Integration of submeters into central Energy and Power Monitoring System (EPMS) is an activity which will require coordination with Division 22 and Division 26 Work.

C. Definitions:

1. See general commissioning definitions as stated in Contract Documents or Reference Documents.

2. Command: When used in relation to BMS commissioning activity, command refers to an instruction or signal sent from a human machine interface (HMI) for the BMS to control systems or specific equipment.

3. Human Machine Interface (HMI): The user interface comprised of equipment, software, and functional programming shown on the Plans and as specified in requirements for building management system – garage, as stated in the Contract Documents.

4. Systems, Equipment, and Components: Where these terms are used together or separately, they shall mean "as-built" systems, equipment, and components.

1.02 COORDINATION

A. See general commissioning requirements as stated in the Contract Documents for general coordination requirements related to commissioning.

1.03 COMMISSIONING ACTIVITIES

A. Commissioning work furnishes labor and material to accomplish BMS commissioning as specified in general commissioning requirements, as stated in the Contract Documents and herein, including:

1. Provide to the Testing and Commissioning Manager preliminary O&M information for use in developing commissioning test procedures.

2. Assist the Testing and Commissioning Manager in developing commissioning activity procedures and data forms submittals for work specified in this Section.

3. Provide information to the Testing and Commissioning Manager needed for control interface wiring diagrams submittals for the work of this Section.

4. Perform Level 1 and Level 2 commissioning activities specified in this Section, including installation verification, static tests, start-up, component tests, equipment tests, systems tests, and intrastation system interface tests.

5. Provide support for Level 3 commissioning activities:

a. Provide field testing points in the interface terminal cabinets (ITCs) and communications distribution cabinets (DCs), being present during Level 3 testing with adequate labor and support personnel to adjust equipment and troubleshoot system failures that might arise. When material or equipment provided in this contract is found to be in conflict with specified criteria, adjust or replace said material or equipment, with the assistance of manufacturer as needed.

6. Provide support for Level 4 commissioning activities, including providing adequate labor and support personnel to adjust equipment, modify logic and troubleshoot and repair system failures that might arise during pre-revenue testing.

7. Operate equipment and system during commissioning activities as required by the Testing and Commissioning Manager.

8. Perform and document commissioning tests to verify readiness for commissioning test demonstration. Commissioning tests are specified herein.

9. Correct issues and repeat commissioning tests when results do not meet acceptance criteria.

10. Commissioning Test Demonstrations: General requirements for commissioning test demonstrations are specified in the Contract Documents:

a. Repeat commissioning tests on a sample basis to demonstrate acceptable performance: Level 1 Component, Equipment, and System Commissioning Tests, and for Level 2 Intra-station system interface tests.

b. Record and submit commissioning test demonstration data and issues.

c. Correct issues and repeat commissioning test demonstration when results do not meet Acceptance Criteria.

11. Attend commissioning meetings as requested by the Testing and Commissioning Manager.

12. Report inconsistencies or issues in system operations or performance.

13. Provide personnel to support commissioning test demonstration specified herein as requested by the Testing and Commissioning Manager.

14. In the event that a commissioning test demonstration fails, assist in determining the cause of failure. Make corrections as necessary.

15. Cooperate with Testing and Commissioning Manager to make equipment and systems ready for commissioning tests specified herein as early in the construction schedule as possible.

16. Provide and maintain System alarm logs.

B. Cooperate with Testing and Commissioning Manager to accomplish commissioning work on schedule and in coordination with other trades.

C. Coordinate completion of Install Verification forms, by the Quality Control Inspector, as identified in the Contractors Quality Control Inspection and Test Plan.

1.04 SYSTEM ALARM LOGS

A. Daily at the start of days following a day in which commissioning tests or commissioning test demonstrations were performed, record log of alarms which occurred since the last log:

1. The intent of this requirement is to discover control system points or sequences left in manual or disabled conditions, abnormal set points, equipment left disconnected, or similar conditions which may have resulted from failure to fully restore systems to normal, automatic control following commissioning tests.

2. Evaluate alarms to determine if the previous day's work resulted in any conditions that would not be considered "normal operation."

3. Conditions that would not be considered "normal operation" shall be reported on a commissioning issue report attached to the alarm log. Resolve as necessary.

1.05 QUALITY ASSURANCE

A. Coordinate completion of Install Verification forms, by the Quality Control Inspector, as identified in the Contractors Quality Control Inspection and Test Plan.

PART 2 - PRODUCTS

2.01 TEST EQUIPMENT

A. Provide test equipment, instruments and tools, including consumable supplies, required to execute commissioning activities.

B. Provide proof of calibration of test equipment. Test equipment shall be calibrated within one year of use. A sticker from the calibration laboratory shall be affixed to the test equipment indicating date of calibration.

C. Provide any proprietary test instruments or tools required by the equipment manufacturer. Provide and operate the proprietary test instruments or tools as required for commissioning work.

PART 3 - EXECUTION

3.01 LEVEL 1 COMMISSIONING ACTIVITIES REQUIREMENTS

A. Level 1 commissioning activities scope: Technical requirements for commissioning of BMS are specified herein.

B. Provide technicians, instrumentation, and tools to perform commissioning activities in accordance with accepted commissioning activity procedures at the direction of the Testing and Commissioning Manager.

C. Scope of BMS commissioning activities applies to all portions of the BMS installation described in the test.

D. Upon approval of product submittals associated with Technical requirements and the scope of Commissioning develop and submit for approval Installation Verification Checklist forms for the quality criteria of the Work specified herein.

E. Preparation

1. Certify that BMS, subsystems, and equipment have been completed, calibrated, and started; and are operating in accordance with Contract Documents.

2. Testing Instrumentation: Install measuring instruments and logging devices to record test data in accordance with accepted commissioning test procedures as directed by the Testing and Commissioning Manager.

3. Certify that BMS instrumentation and control systems have been completed and calibrated; are operating according to the Contract Documents; and that pretest set points have been recorded.

F. Test all operating modes, interlocks, control responses, and responses to abnormal or emergency conditions, and verify proper response of building automation system controllers, and sensors.

G. Perform tests using design conditions whenever possible. If tests cannot be completed because of a deficiency outside the scope of the Equipment system, document the deficiency and report it to Sound Transit. After deficiencies are resolved, reschedule tests.

H. Simulated conditions may need to be imposed using an artificial load when it is not practical to test under design conditions. Provide equipment to simulate loads. Set simulated conditions in accordance with accepted commissioning test procedures as directed by the

Testing and Commissioning Manager. Document simulated conditions and methods of simulation. After tests, return settings to normal operating conditions.

I. Request approval to alter set points when simulating conditions is not practical. Request approval to alter sensor values with a signal generator when design or simulating conditions and altering set points are not practical.

J. If tests cannot be completed because of a deficiency outside the scope of the BMS, document the deficiency and report it to Sound Transit. After deficiencies are resolved, reschedule tests.

K. Where seasonal testing is specified, complete appropriate initial commissioning tests and documentation within the Construction Period. Schedule and execute seasonal tests when specified conditions are expected.

3.02 LEVEL 1 AND LEVEL 2 COMMISSIONING ACTIVITY PROCEDURES

A. Submit a single (combined) commissioning document (checklists, test procedures, forms) for all Level 1 commissioning activities as outlined below for the BMS for review and approval as outlined in Section 01 91 13 – General Systems Testing and Commisioning Requirements. The document must be broken up into sections with each activity and part separate with a sub header. Completed sections for each activity group (IV, SU, C, S) must be submitted upon completion.

B. Submit Level 1 commissioning activity test procedures and data forms for the following types of commissioning activities, requirements for which are specified herein:

1. Level 1 commissioning activities:

a. Installation verification.

b. Static tests.

c. Start-up procedures.

d. Component tests.

e. Equipment tests.

f. System tests.

2. Level 2 commissioning activities:

a. Intra-station system interface tests to external equipment.

3.03 LEVEL 1 INSTALLATION VERIFICATION CHECKLIST REQUIREMENTS

A. Installation verification checklist forms shall include the following:

1. Organized to prompt the installer to check off quality criteria for each discrete portion of the Work.

2. Identify the system or features to which the installation verification checklist applies at the top of the form.

3. Section for verification of delivery of accepted materials.

4. Section for condition of materials at delivery.

5. Section for description of installation steps. Include manufacturer's installation instructions.

6. Space at the end of the form for the installer to print their name and company name, fill in the date, and sign or initial.

7. Space at the end of the form for the Quality Control inspector designated for the scope to review and accept installation verification. QC Inspector must perform Install Verification and verify each element identified in form has been reviewed for conformance with contract documents and in accordance with the Contractors Quality Control Inspection and Test Plan as part of Section 01 45 00 – Qualiity Assurance / Quality Control.

8. Space to identify the area of work for which the installer is executing the Installation Verification Checklist.

9. Description of the quality criteria as it pertains to the specific work. Include a check-box for each criterion.

10. Example checklists/test forms can be provided upon request.

B. Quality Criteria: Installation verification checklists shall address the following quality criteria:

1. Make and model match accepted submittals.

2. Equipment is installed without visible damage.

3. Location is as indicated on drawings.

4. Equipment is accessible for maintenance using safe work practices.

5. There is sufficient space to remove and replace components intact without demolishing other work.

6. Equipment and materials are clean.

7. Identification of wiring and components is complete, legible, located to be visible, and in accordance with contract requirements.

C. Fill out and sign installation verification checklists for BMS while the Work is being installed. The intent is for the installing tradesperson to fill out and sign the installation verification checklist as work proceeds to improve the quality of the installation. Print and post completed installation verification checklists near installed work on site.

D. Before performing a commissioning test, installation verification checklists must be performed and completed by QC inspector designated for the appropriate area specified herein and within the Contractors Quality Control Inspection and Test Plan as part of Section 01 45 00 – Qualiity Assurance / Quality Control. Submit completed installation verification checklists for work included in the commissioning test.

3.04 LEVEL 1 INSTALLATION VERIFICATION

A. [*Designer: Review identified IV's, E and S tests and add or modify as necessary based on location design of BMS.]*

B. The following installation verification activity is required prior to field installation:

1. 2508-IV-01 BMS Factory Tests and Inspections:

a. Documentation of factory tests and inspections, in accordance with requirements for field control system - garage, as stated in the Contract Documents, Article Factory Tests and Inspections.

C. The following installation verification activities are required after field installation:

1. 2508-IV-02 BMS enclosures including cabinets and racks, including:

    a. Print and maintain manufacturer shop drawings and wiring diagrams in each provided BMS enclosure.

2. 2508-IV-03 Local BMS HMI.

3. 2508-IV-06 BMS supervisory controller, equipment controllers and remote I/O.

4. 2508-IV-08 BMS communication cabling, including:

    a. All serial communication cables used in BMS applications as stated in the Contract Documents.

    b. All copper (ethernet) cables used in BMS applications as stated in the Contract Documents.

    c. All fiber communication cables used in BMS applications as stated in the Contract Documents.

    d. Interconnections between DCs and ITCs.

    e. For all instances, verify:

        1) Cables are organized

        2) Labels match shop drawings

        3) Cables are secured to prevent damage and allow access for maintenance

5. 2508-IV-09 BMS labeling and Identification.

3.05 LEVEL 1 STATIC TESTS (NOT USED)

3.06 LEVEL 1 START-UP

A. 2508-SU-01: BMS Start-up:

1. System/Equipment to be tested:

    a. Building Management System (BMS).

2. Functions to be tested:

    a. Branch circuit and control power supply connections.

    b. Communication between cabinets/enclosures/panels.

    c. System diagnostic functions.

3. Conditions of test:

    a. Prerequisite: All installation verification activities have been completed.

    b. Perform on-site start-up of BMS components in accordance with manufacturer's recommended procedures.

4. Acceptable Results:

    a. Start-up test functions demonstrate acceptable results.

b. Acceptable results of start-up procedures in accordance with manufacturer's recommendations.

3.07 LEVEL 1 COMPONENT TESTS (NOT USED)

3.08 LEVEL 1 EQUIPMENT TESTS (NOT USED)

3.09 LEVEL 1 SYSTEM TESTS

A. 2508-S-01: Operator Interfaces:

1. System/equipment to be tested: Operator Interfaces:

a. BMS HMI.

2. Functions to be tested:

a. Access to all station equipment and systems on BMS via the BMS log-in screen; will utilize the programming and control commands, control software programming languages, and graphical representations.

3. Conditions of the test:

a. Demonstrate input, output and programming access at the BMS HMI:

1) Operator selected display of input/output data in tabular or graphic format.

2) Equipment dynamic graphics.

3) System dynamic graphics.

4) Equipment status.

5) Equipment commands, including start/stop, open/close.

6) Analog input values.

7) Digital input values.

8) Digital output values.

9) Analog output values

10) Logs and reports.

11) Change analog limits.

12) Add, delete, or change points within each control unit or application routine.

13) Change point input/output descriptors, status, alarm descriptors, and engineering unit descriptors.

14) Add new control units to system.

15) Modify and set up maintenance scheduling parameters.

16) Develop, modify, delete or display full range of color graphic displays.

17) Automatically archive select data even when running third party software.

18) Provide capability to sort and extract data from archived files and to generate custom reports.

19) Operator selectable output of screen graphical images, data trend logs, and/or alarm summary information.

20) Automatic time and date stamped output of all system alarms and automatic or manual control system actions.

21) Select daily, weekly or monthly as scheduled frequency to synchronize time and date in digital control units. Accommodate daylight savings time adjustments.

22) Print selected control unit database to PDF.

23) Add and delete points.

24) Modify any point parameter.

25) Change, add, or delete English language descriptors.

26) Add, modify, or delete alarm limits.

27) Add, modify, or delete points in start/stop programs, trend logs, etc.

28) Create custom relationship between points.

29) Create or modify control loops and parameters.

30) Create or modify override parameters.

31) Add, modify, and delete any applications program.

32) Add, delete, develop, or modify dynamic color graphic displays.

4. Acceptance Criteria:

a. Inputs, outputs, graphics and control appear at the BMS HMIs and behave identically.

B. 2508-S-03: System Response Time:

1. System/equipment to be tested:

a. BMS controllers.

b. BMS communication.

2. Functions to be tested:

a. Speed of response and communication of inputs and outputs.

3. Conditions of the test:

a. Create a change of status input of a digital-monitored device.

b. Create a change of value at an analog input device.

c. Create a digital output to a digital-monitored device.

4. Acceptance Criteria:

a. Digital input changes: Indicated on HMI displays following field device change within an appropriate response time for the installed equipment.

b. Analog input changes beyond a change detection threshold: Indicated on HMI displays following field device change within an appropriate response time for the installed equipment.

c. Digital output commands entered at the HMI: Executed in the field within an appropriate response time for the installed equipment.

C. 2508-S-04: BMS Alarm Processing:

1. System/equipment to be tested:

a. BMS.

2. Functions to be tested:

a. Alarm generation and notification.

3. Conditions of the test:

a. Abnormal condition: Create abnormal condition.

b. Critical alarm or change of state: Create critical alarm.

c. Display alarm reports on video.

d. Time delay for equipment start-up or shutdown.

e. Unique routing of specific alarms. Generate alarms that are specified for unique routing.

f. Demonstrate selectable configuration of whether alarm requires acknowledgment.

g. Unacknowledged alarms after return to normal. Restore normal operation without acknowledging alarm.

h. Demonstrate alarm notification modes.

4. Acceptance Criteria:

a. Abnormal condition: Cause alarm and appropriate message, including time, system, point descriptor, and alarm condition.

b. Critical alarm or change-of-state: Display message, stored on disk for review and sort, or print.

c. Display alarm reports on video. Display multiple alarms in order of occurrence.

d. Capable of defining time delay for equipment start-up or shutdown.

e. Allow unique routing of specific alarms.

f. Operator selectable configuration specifies if alarm requires acknowledgment.

g. Continue to indicate unacknowledged alarms after return to normal.

h. Alarm notification actions:

1) Display indicating alarm condition.

2) Selectable audible alarm indication.

D. 2508-S-05: BMS Diagnostic Alarms:

1. System/equipment to be tested:

a. BMS controllers, including controller chassis, I/O chassis, and processor.

b. BMS communication.

2. Functions to be tested:

a. Response to detectable, non-fatal faults in the controller chassis or IO chassis.

1) Provide a summary warning alarm for all detectable, non-fatal faults in the controller chassis or I/O chassis.

2) Provide a summary fail alarm for major faults including failure of any BMS controller.

b. Response to major faults including failure of any BMS controller.

3. Conditions of the test:

a. Initiate detectable, non-fatal faults in controller chassis.

b. Initiate detectable, non-fatal faults in I/O chassis.

c. Simulate failure of BMS controller.

4. Acceptance Criteria:

a. System generates summary warning alarm for detectable, non-fatal faults in the controller chassis.

b. System generates summary warning alarm for detectable, non-fatal faults in the I/O chassis.

c. System generates summary fail alarm for major faults, including failure of BMS controller.

E. 2508-S-06: BMS interface to the following: BMS cabinet terminal strip, interface terminal cabinet terminal strip, and field equipment terminals:

1. System/equipment to be tested:

a. BMS discrete I/O modules.

b. BMS PLC interface to terminal strips.

c. BMS inputs and outputs.

2. Functions to be tested:

a. Point level supervisory diagnostic capabilities.

3. Conditions of the test:

a. At the terminal strip for a normally open alarm point simulate a contact closure.

b. At the terminal strip for a normally closed alarm point simulate a contact open.

c. At the terminal strip for an analog point simulate the value going from minimum to maximum.

d. At the terminal strip for outputs simulate the following conditions in the below sequence:

1) Off-state.

2) No-load.

3) On-state.

4. Acceptance Criteria:

a. BMS HMI initiates alarm and correctly identifies the close (for normally open contact).

b. BMS HMI initiates alarm and correctly identifies the open (for normally closed contact).

c. BMS HMI show change from high to low value.

d. The terminal strip show control pulse on the point.

F. 2508-S-07: Control Loop Tuning and Stability:

1. System/equipment to be tested:

a. Each BMS control loop that consists of controller logic that monitors one or more process variable inputs, generates an analog or discrete control variable output that drives field equipment, and responds to a set point.

b. Field instrumentation that monitors field conditions, including temperature, pressure, etc.

c. Field equipment acted upon by the controller, including actuators, temperature control equipment, variable speed motors, etc.

d. HMI screens that display process, control, and set point variables associated with a PLC or equipment controller.

2. Functions to be tested:

a. Control loop adjustability and stability.

3. Conditions of the test:

a. Initiate a step change to the system by adjusting the loop set point up and down by 10 percent. Execute for each of the low, mid, and high portion of the adjustability range.

b. Disable and re-enable the field equipment to ensure the system recovers after disabling or failure.

c. Disable and re-enable the process variable instrument(s) to ensure the system recovers.

4. Acceptance Criteria:

a. Actuated field equipment responds to a change in set point without oscillation or excessive response delay, as demonstrated by HMI trends.

b. Zero difference after response delay between the commanded set point and measured process value as demonstrated by HMI trends.

c. The criteria described above are satisfied over the range of expected set points defined by the sequence of operation and the range of anticipated environmental conditions.

3.10 LEVEL 1 INTRA-STATION SYSTEM INTERFACE TESTING REQUIREMENTS

A. 2508-IS-01: HVAC Sequence of Operation:

1. [Designer: Review and add to or modify list as necessary based on location design. Coordinate with Division 23.]

2. System/Equipment to be tested:

a. Associated HVAC equipment as described in the Contract Documents

b. BMS:

3. Functions to be tested:

a. All HVAC I/O in the BMS Points List.

b. All HVAC control logic and sequences of operation.

4. Conditions of the test:

a. Prerequisites: Completion with acceptable results of Level 1 and Level 2 commissioning activities specified for System/equipment to be tested.

b. Verify display of specified parameters.

c. Create a change of state for each of the HVAC I/O points.

d. Send a digital output to each of the controls points in the HVAC I/O points.

e. Simulate the logic with required inputs to the BMS for control logic described in the mechanical subset.

5. Acceptable Results:

a. HVAC operating parameters are displayed correctly at the BMS HMI.

b. HVAC indications and alarms are annunciated correctly at the BMS HMI.

B. BMS perform logic the logic by providing the indicated displays and outputs as described for the HVAC control logic described in the Contract Documents.

C. 2508-IS-02: FACP Incident Response:

1. *[Designer: Review and add to or modify list as necessary based on location design. Coordinate with Division 28.]*

2. System/equipment to be tested:

a. Fire alarm control panel (FACP).

b. BMS controllers.

3. Functions to be tested:

a. BMS response to FACP incident event.

4. Conditions of the test:

a. Initiate an incident condition signal on FACP.

5. Acceptance Criteria:

a. The Fire Alarm system generates a zone specific serial message of a detected event within the station.

b. The BMS receives the indication from the FACP and provides a color change indication of the affected station zone on the BMS HMI's.

c. The BMS executes the proper ventilation, HVAC, and station equipment operating configuration based on the applicable sequence of operations shown on the emergency response matrix, the Plans and in the related Sections, and transmits the recommended configuration and ready status to the BMS Link Control Interface.

d. BMS automatically postures the station systems and equipment in the required configuration and initiates operation.

e. BMS maintains equipment in its response state until smoke/fire event has been 'Cleared' at the FCC.

f. Upon receipt of confirmation of event ending, BMS operator returns all ventilation, HVAC, and station equipment to normal operating configurations and states.

D. 2508-IS-03: HVAC - Fire Alarm Response

1. *[Designer: Review and add to or modify list as necessary based on location design. Coordinate with Division 23, 28.]*

2. System/equipment to be tested:

a. HVAC units (i.e. Air Handling Units, Air Conditioning Units) and associated control devices.

b. Supply and exhaust fans.

c. Electric heating coils.

d. Fire smoke dampers.

e. Duct smoke detectors, where applicable.

f. Fire alarm system.

3. Functions to be tested:

a. Response of HVAC equipment and associated devices to fire alarm.

b. Response of HVAC equipment and associated devices to duct smoke detection, where applicable.

c. Response of HVAC equipment and associated devices to fire department override.

4. Conditions of the test:

a. Prerequisites: Completion with acceptable results of Level 1 and Level 2 commissioning activities specified for system/equipment to be tested.

b. Operate HVAC equipment in an unoccupied mode. Initiate a fire alarm.

c. If provided at the fire alarm control panel, override equipment shutdown.

d. Operate HVAC equipment in unoccupied mode with a call for heating. Initiate a fire alarm.

e. If provided at the fire alarm control panel, override equipment shutdown.

f. Operate HVAC equipment in unoccupied mode with a call for cooling. Initiate a fire alarm.

g. If provided at the fire alarm control panel, override equipment shutdown.

h. For equipment with duct smoke detection, operate in unoccupied mode and cause the duct smoke detector to activate.

i. Repeat conditions of the test with equipment in occupied mode.

5. Acceptance Criteria:

a. Documented completion of prerequisites.

b. For all conditions, HMI accurately reflects status of equipment and positions of devices.

c. Confirm HVAC equipment responds as described in the Contract Documents

E. 2508-IS-07: External Control and Monitoring Interface

1. [Designer: Review and add to or modify list as necessary based on location design. Coordinate with other disciplines.]

2. System/equipment to be tested:

a. BMS I/O connections for external control and monitoring applications as stated in the Contract Documents.

3. Functions to be tested:

a. External monitoring of BMS points: digital, analog, and network points.

b. External control of BMS points: digital, analog, and network points.

4. Conditions of the test:

a. BMS outputs to external interface: Verify accuracy of control parameter value represented at the external interface, relative to the value reported at the HMI for the same parameter.

b. External interface inputs to BMS: Verify BMS response to external interface inputs is accurate.

5. Acceptance Criteria:

a. BMS outputs to external interface are accurately represented at the external interface, relative to the value reported at the HMI for the same parameter.

b. BMS response to external interface inputs is accurate.

F. 2508-IS-08: Gas Detection Responses

1. [Designer: Review and add to or modify list as necessary based on location design. Coordinate with Division 23, 28.]

2. System/equipment to be tested:

a. All gas detection devices used in BMS applications including for carbon monoxide (CO), nitrogen dioxide (NO2), and/or hydrogen (H2) detection.

b. Associated exhaust/ventilation fans and dampers.

3. Functions to be tested:

a. Fan response to schedule.

b. Fan response to gas detection alarms.

c. Fan alternation if applicable.

d. Fan failover if applicable.

4. Conditions of the test:

a. Exceed gas detection alarm setpoints via calibration kits at the detection device or alternate method as detailed in commissioning form procedures

b. Occupied and unoccupied modes.

5. Acceptance Criteria:

a. Fans and dampers respond as intended.

b. Alarms are indicated and logged.

G. 2508-IS-10: Pump Station Control

1. [Designer: Review and add to or modify list as necessary based on location design. Coordinate with Division 22.]

2. System/equipment to be tested:

   a. Pump Station controller .

   b. BMS controller.

3. Functions to be tested:

   a. Correct mapping of PLC I/O points in BMS.

   b. Monitoring PLC inputs by BMS.

4. Conditions of the test:

   a. One by one, alter the values of inputs monitored by the BMS by changing the physical condition of the input sensed by the BMS.

5. Acceptance Criteria:

   a. Sensed condition is reported correctly by BMS.

3.11 LEVEL 1 AND LEVEL 2 TEST REQUIREMENTS MATRIX

	2508-IV-0X	**2508-ST-0X**	**2508-SU-0X**	**2508-C-0X**	**2508-E-0X**	**2508-S-0X**	**2508-IS-0X**
Factory Tests and Inspections	X						
Enclosures	X						
Local HMI	X						
Controllers and RIO	X						
Communication Cabling	X						
Labeling and Identification	X						
Startup			X				
Operator Interfaces						X	
System Response Time						X	
Alarm Processing						X	
Diagnostic Alarms						X	
Interfaces to Terminals						X	
Control Loop Stability						X	
HVAC Sequence of Operation							X
FACP Incident Response							X
HVAC Incident Response							X
External Control and Monitoring Interface							X
Gas Detection Responses							X
Pump Station Control							X
Labeling and Identification							X

[DESIGNER: ADD OR MODIFY MATRIX AS NECESSARY BASED ON TESTS ADDED OR MODIFIED ABOVE DEPENDING UPON THE LOCATION DESIGN FOR BMS]

3.12 LEVEL 3 INTER-STATION SYSTEM INTERFACE TEST REQUIREMENTS (NOT USED)

3.13 LEVEL 3 COORDINATION WITH OTHER CONTRACTORS

A. Provide as-built copies of the Points List to the Sound Transit when required by the Contract. These are necessary for the contractors to design their control system.

B. Continuity Testing: To expedite continuity testing, supply as-built Points List within thirty days after all points have been successfully tested and signed-off.

C. Control System Testing: Following the continuity testing, other contractors will verify the functionality of integration of this Contract controls with that of other contracts. The Control System Testing period will last 30 days. This period begins when Systems Integration Testing has been completed.

D. During the Continuity Testing and Control System Testing periods, perform the following:

1. Jointly field test points in the interface terminal strips with the applicable systems contractors and verify the operation and monitoring of equipment as shown on the Contract Drawings, wiring diagrams, and Points List.

2. Be present during this testing period with adequate labor and support personnel to adjust equipment and troubleshoot system failures that might arise. When a piece of mechanical or electrical equipment is found to be in conflict with specific criteria, have an experienced representative of the manufacturer make an adjustment to the item. If adjustments fail to correct the operation of a piece of equipment or fixture, remove the equipment or fixture from the Contract site and replace it with a workable replacement that will meet the specification requirements.

E. Provide support to integrate the Garage with the existing Sound Transit Honeywell infrastructure.

3.14 LEVEL 3 AND LEVEL 4 SYSTEM TESTS

A. System Test checklists are required to include the following, at a minimum:

1. 2508-ISIS-02: Central EPMS Integration:

a. System / Equipment to be tested:

1) Submeter to Central WinPM.Net server communication.

2) Central EPMS server configuration and functionality for additional submeters.

3) Central EPMS server is existing. Configuration is updated to include additional submeters.

b. Functions to be tested:

1) Screen elements, data logging, alarming, data historian, and trending functions of the Central EPMS server for additional submeters.

c. Conditions of test:

1) Level 1 commissioning activities for submeters is completed.

2) Communication between submeters and the Central EPMS server are operational and perform as expected.

d. Acceptable Results:

1) Screen elements, data logging, alarming, data historian, and trending functions of the Central EPMS server for additional submeters are functioning correctly.

LEVEL 3 AND LEVEL 4 TEST REQUIREMENTS MATRIX

	2508-ISIS-0X
Central EPMS Integration	X

[DESIGNER: ADD OR MODIFY MATRIX AS NECESSARY BASED ON TESTS ADDED OR MODIFIED ABOVE DEPENDING UPON THE LOCATION DESIGN FOR BMS]

END OF SECTION

EXHIBITS

1. Exhibit A - Example Test Procedure (Preceeding Pages)

EXHIBIT A

EXAMPLE TEST PROCEDURE

3.01 TEST INFORMATION

Test ID:	*2508-S-01 BMS Operator Interface*
Date Time and Location:	
First Test, Repeat Test or Demonstration:	
Equipment IDs:	

3.02 OBJECTIVES

A. Verify performance of BMS Operator Interface (HMI)

B. Reference section 25 08 00 3.09A

3.03 SYSTEMS AND EQUIPMENT TO BE TESTED

A. Access to all station equipment and systems on BMS via the BMS log-in screen; will utilize the programming and control commands, control software programming languages, and graphical representations.

3.04 PREREQUISITES

A.	BMS equipment communicates successfully over network	Y___N___
B.	BMS equipment has passed Start-Up test	Y___N___
C.	System alarm log captured prior to testing	Y___N___

3.05 MINIMUM PARTICIPANTS

A. Test Technician

B. Owner's Witness

3.06 TEST PROCEDURE

A. In accordance with general conditions of the contract, contractor shall be responsible for initiating, maintaining, and supervising all safety precautions and programs in connection with the performance of this test. Stop the test and notify the owner if it is determined that any part of the test cannot be performed safely. Reference section 25 08 00 3.09A

B. Perform and document the following steps in the order listed. Acceptance criteria are listed below each step.

C.	To verify proper functionality of the BMS operator interface, demonstrate the following on the BMS HMI:	
1.	Operator selected display of input/output data in tabular or graphic format.	PASS___ FAIL___
2.	Equipment dynamic graphics	PASS___ FAIL___
3.	System dynamic graphics	PASS___ FAIL___
4.	Equipment status	PASS___ FAIL___
5.	Equipment commands including start/stop, open/close	PASS___ FAIL___
6.	Analog input values read expected values correctly	PASS___ FAIL___
7.	Analog output values read expected values correctly	PASS___ FAIL___
8.	Digital input values read expected values correctly	PASS___ FAIL___
9.	Digital output values read expected values correctly	PASS___ FAIL___
10.	Networked input values read expected values correctly	PASS___ FAIL___
11.	Networked output values read expected values correctly	PASS___ FAIL___
12.	Logs and reports functional	PASS___ FAIL___
13.	Analog setpoint changes demonstrated	PASS___ FAIL___
14.	Ability to add, delete, modify points demonstrated	PASS___ FAIL___
15.	Ability to modify point descriptions, status, alarms and engineering units demonstrated	PASS___ FAIL___
16.	Ability to develop, modify, delete or display full range of color graphic displays	PASS___ FAIL___
17.	Automatically archive select data while running third party software	PASS___ FAIL___

18.	Capability to sort and extract data from archived files and generate custom reports	PASS___ FAIL___
19.	Operator selectable output of screen graphical images, data trend logs, and alarm summary information	PASS___ FAIL___
20.	Automatic time and date stamped output of all system alarms and automatic or manual control system actions	PASS___ FAIL___
21.	Machine date and time settings accurate	PASS___ FAIL___
22.	Demonstrate ability to export HMI point configurations to .csv or other acceptable file format	PASS___ FAIL___
23.	Ability to start/stop HMI program demonstrated, printed instructions are posted near installation	PASS___ FAIL___
24.	Ability to override point values and other parameters demonstrated	PASS___ FAIL___

3.07 ACCEPTANCE CRITERIA

A. Observed results shall comply with acceptance criteria in the procedure above.

3.08 TEST RESULTS

A. Record test conditions and results on the Test Procedure in the spaces provided above at the time of the test. Record results legibly in ink.

3.09 OBSERVATIONS NOTED OR CORRECTIVE ACTIONS REQUIRED

#	Description	Resolution	Retest Req'd
			Y___N___
			Y___N___

3.10 SIGNATURES

A. The undersigned have witnessed the above test and verified that the test was performed in accordance with the Approved Commissioning Test Procedure and that the results recorded were the actual results observed.

1. Format: COMPANY / PRINT NAME / SIGNATURE / DATE

B. Installing Contractor: _____

C. Owner Witness Signature: _____

D. Additional Witnesses: Contractor: _____

END OF EXHIBITS

SECTION 25 08 60

COMMISSIONING OF LINK STATION CONTROLS

NOTE TO DESIGNER:

SECTIONS WITH BRACKETS. E.G., [TEXT] ARE TO BE MODIFIED OR DELETED IF NOT APPLICABLE. ITALICIZED TEXT PROVIDES INSTRUCTION TO THE DESIGNER TO INCLUDE LANGUAGE ON SPECIFIC TOPICS WHEN APPLICABLE. THE INSTRUCTIONS ARE TO BE DELETED WHEN THE SPECIFICATION IS FINALIZED. LANGUAGE NOT IN BRACKETS IS TO BE USED 'AS IS' WITHOUT MODIFICATION ORWITH AN APPROVED SPECIFICATION MODIFICATION REQUEST.

DESIGNER TO DELETE TEXT ABOVE FOR FINAL SECTION

PART 1 - GENERAL

1.01 SUMMARY

A. Section includes:

1. Requirements for the commissioning process for Link Station Building Management System (BMS) and the Emergency Ventilation System (EVS). Together when describing elements that apply to both systems they are referred to as Field Control System or FCS:

a. Level 1 commissioning activities for FCS.

b. Level 2 commissioning activities for interface verification between systems within this Contract.

c. Level 3 commissioning and support for Level 3 commissioning activities for interface verification between systems provided under this Contract with systems provided by others.

d. Support for Level 4 commissioning activities related to pre-revenue testing.

B. Any LEED execution requirements for commissioning of FCS are in accordance with the LEED certification requirements (including the LEED specifications matrix requirements) as stated in the Contract Documents.

1. Integration of submeters into central Energy and Power Monitoring System (EPMS) is an activity which will require coordination with Division 22 and Division 26 Work.

C. Definitions:

1. See general commissioning definitions as stated in Contract or Reference Documents.

2. Command: When used in relation to an FCS commissioning activity, command refers to an instruction or signal sent from a human machine interface (HMI) for the FCS to control systems or specific equipment.

3. Human Machine Interface (HMI): The user interface comprised of equipment, software, and functional programming shown on the Plans and as specified in requirements for field control system as stated in the Contract Documents.

4. Systems, Equipment, and Components: Where these terms are used together or separately, they shall mean "as-built" systems, equipment, and components.

1.02 COORDINATION

A. See general commissioning requirements as stated in the Contract Documents for general coordination requirements related to commissioning.

1.03 COMMISSIONING ACTIVITIES

A. Commissioning work furnishes labor and material to accomplish FCS commissioning as specified in general commissioning requirements as stated in the Contract Documents, and herein, including:

1. Provide to the Testing and Commissioning Manager preliminary O&M information for use in developing commissioning test procedures.

2. Assist the Testing and Commissioning Manager in developing commissioning activity procedures and data forms submittals for work specified in this Section.

3. Provide information to the Testing and Commissioning Manager needed for control interface wiring diagrams submittals for the work of this Section.

4. Perform Level 1 and Level 2 commissioning activities specified in this Section, including installation verification, static tests, start-up, component tests, equipment tests, systems tests, and intrastation system interface tests.

5. Provide Level 3 commissioning and support for Level 3 commissioning activities:

a. Include field testing points in the interface terminal cabinets (ITCs) and communications distribution cabinets (DCs), being present during Level 3 testing with adequate labor and support personnel to adjust equipment and troubleshoot system failures that might arise. When material or equipment provided in this contract is found to be in conflict with specified criteria, adjust or replace said material or equipment, with the assistance of manufacturer as needed.

b. Include field testing emergency ventilation modes that includes fans, EVCP, FDCPs, PLCs, remote I/O, and networking equipment provided by this contract. Provide adequate labor and support personnel to adjust equipment and troubleshoot system failures that might arise. When material, logic or equipment provided in this contract is found to be in conflict with specified criteria, adjust, modify or replace said material or equipment, with the assistance of manufacturer or integrator as needed.

6. Provide support for Level 4 commissioning activities, including providing adequate labor and support personnel to adjust equipment, modify logic and troubleshoot and repair system failures that might arise during pre-revenue testing.

7. Operate equipment and system during commissioning activities as required by the Testing and Commissioning Manager.

8. Perform and document commissioning tests to verify readiness for commissioning test demonstration. Commissioning tests are specified herein.

9. Correct issues and repeat commissioning tests when results do not meet acceptance criteria.

10. Commissioning Test Demonstrations: General requirements for commissioning test demonstrations are specified in general commissioning requirements as stated in the Contract Documents.

    a. Repeat commissioning tests on a sample basis to demonstrate acceptable performance: Level 1 Component, Equipment, and System Commissioning Tests, and for Level 2 Intra-station system interface tests.

    b. Record and submit commissioning test demonstration data and issues.

    c. Correct issues and repeat commissioning test demonstration when results do not meet Acceptance Criteria.

11. Attend commissioning meetings as requested by the Testing and Commissioning Manager.

12. Report inconsistencies or issues in system operations or performance.

13. Provide personnel to support commissioning test demonstration specified herein as requested by the Testing and Commissioning Manager.

14. In the event that a commissioning test demonstration fails, assist in determining the cause of failure. Make corrections as necessary.

15. Cooperate with Testing and Commissioning Manager to make equipment and systems ready for commissioning tests specified herein as early in the construction schedule as possible.

16. Provide and maintain System alarm logs.

B. Cooperate with Testing and Commissioning Manager to accomplish commissioning work on schedule and in coordination with other trades.

C. Coordinate completion of Install Verification forms, by the Quality Control Inspector, as identified in the Contractors Quality Control Inspection and Test Plan.

1.04 SYSTEM ALARM LOGS

A. Daily at the start of days following a day in which commissioning tests or commissioning test demonstrations were performed, record log of alarms which occurred since the last log.

1. The intent of this requirement is to discover control system points or sequences left in manual or disabled conditions, equipment left disconnected, or similar conditions which may have resulted from failure to fully restore systems to normal, automatic control following commissioning tests.

2. Evaluate alarms to determine if the previous day's work resulted in any conditions that would not be considered "normal operation."

3. Conditions that would not be considered "normal operation" shall be reported on a commissioning issue report attached to the alarm log. Resolve as necessary.

1.05 QUALITY ASSURANCE

A. Coordinate completion of Install Verification forms, by the Quality Control Inspector, as identified in the Contractors Quality Control Inspection and Test Plan.

PART 2 - PRODUCTS

2.01 TEST EQUIPMENT

A. Provide test equipment, instruments and tools, including consumable supplies, required to execute commissioning activities.

B. Provide proof of calibration of test equipment. Test equipment shall be calibrated within one year of use. A sticker from the calibration laboratory shall be affixed to the test equipment indicating date of calibration.

C. Provide any proprietary test equipment, instruments and tools required by the equipment manufacturer. Provide and operate the proprietary test instruments or tools as required for commissioning work.

PART 3 - EXECUTION

3.01 LEVEL 1 COMMISSIONING ACTIVITIES REQUIREMENTS

A. Level 1 commissioning activities scope: Technical requirements for commissioning of FCS are specified herein.

B. Provide technicians, instrumentation, and tools to perform commissioning activities in accordance with accepted commissioning activity procedures at the direction of the Testing and Commissioning Manager.

C. Scope of FCS commissioning activities applies to all portions of the FCS installation described in the test.

D. Upon approval of product submittals associated with Technical requirements and the scope of Commissioning develop and submit for approval Install Verification Checklist forms for the quality criteria of the Work specified herein.

E. Preparation

1. Certify that FCS, subsystems, and equipment have been completed, calibrated, and started; and are operating in accordance with Contract Documents.

2. Testing Instrumentation: Install measuring instruments and logging devices to record test data in accordance with accepted commissioning test procedures as directed by the Testing and Commissioning Manager.

3. Certify that FCS instrumentation and control systems have been completed and calibrated; are operating according to the Contract Documents; and that pretest set points have been recorded.

4. Set systems, subsystems, and equipment into operating mode to be tested (e.g., normal shut down, normal auto position, normal manual position, unoccupied cycle, emergency power, and alarm conditions) in accordance with accepted commissioning test procedures as directed by the Testing and Commissioning Manager.

F. Test all operating modes, interlocks, control responses, responses to abnormal or emergency conditions for all Contractor provided equipment connected to the FCS, and verify proper response of FCS, controllers, and sensors.

G. Perform tests using design conditions whenever possible.

H. Simulated conditions may need to be imposed using an artificial load when it is not practical to test under design conditions. Provide equipment to simulate loads. Set simulated conditions in accordance with accepted commissioning test procedures as directed by the Testing and Commissioning Manager. Document simulated conditions and methods of simulation. After tests, return settings to normal operating conditions.

I. Request approval to alter set points when simulating conditions is not practical. Request approval to alter sensor values with a signal generator when design or simulating conditions and altering set points are not practical.

J. If tests cannot be completed because of a deficiency outside the scope of the FCS, document the deficiency and report it to Sound Transit. After deficiencies are resolved, reschedule tests.

K. Where seasonal testing is specified, complete appropriate initial commissioning tests and documentation within the Construction Period. Schedule and execute seasonal tests when specified conditions are expected.

3.02 LEVEL 1 AND LEVEL 2 COMMISSIONING ACTIVITY PROCEDURES

A. Submit a single (combined) commissioning document (checklists, test procedures, forms) for all Level 1 commissioning activities as outlined below for the FCS for review and approval as outlined in Section 01 91 13 – General Systems Testing and Commissioning Requirements. The document must be broken up into sections with each activity and part separate with a sub header. Completed sections for each activity group (IV, SU, C, S) must be submitted upon completion.

B. Submit Level 1 commissioning activity test procedures and data forms for the following types of commissioning activities, requirements for which are specified herein.

1. Level 1 commissioning activities:

   a. Installation verification

   b. Static tests

   c. Start-up procedures

   d. Component tests

   e. Equipment tests

   f. System tests

2. Level 2 commissioning activities:

   a. Intra-station system interface tests to external equipment.

3.03 LEVEL 1 INSTALLATION VERIFICATION CHECKLIST REQUIREMENTS

A. Installation verification checklist forms shall include the following:

1. Organized to prompt the installer to check off quality criteria for each discrete portion of the Work.

2. Identify the system or features to which the installation verification checklist applies at the top of the form.

3. Section for verification of delivery of accepted materials.

4. Section for condition of materials at delivery.

5. Section for description of installation steps. Include manufacturer's installation instructions.

6. Space at the end of the form for the installer to print their name and company name, fill in the date, and sign or initial.

7. Space at the end of the form for the Quality Control inspector designated for the scope to review and accept installation verification. QC Inspector must perform Install Verification and verify each element identified in form has been reviewed for conformance with contract documents and in accordance with the Contractors Quality Control Inspection and Test Plan as part of Section 01 45 00 – Quality Assurance / Quality Control.

8. Space to identify the area of work for which the installer is executing the Installation Verification Checklist.

9. Description of the quality criteria as it pertains to the specific work. Include a check-box for each criterion.

10. Example checklists/test forms can be provided upon request.

B. Quality Criteria: Installation verification checklists shall address the following quality criteria.

1. Make and model match accepted submittals.

2. Equipment is installed without visible damage.

3. Location is as indicated on drawings.

4. Equipment is accessible for maintenance using safe work practices.

5. There is sufficient space to remove and replace components intact without demolishing other work.

6. Equipment and materials are clean.

7. Identification of wiring and components is complete, legible, located to be visible, and in accordance with contract requirements.

C. Fill out and sign installation verification checklists for FCS while the Work is being installed. The intent is to fill out and sign the installation verification checklist as work proceeds to improve the quality of the installation. Print and post completed installation verification checklists near installed work on site.

D. Before performing a commissioning test, installation verification checklists must be performed and completed by QC inspector designated for the appropriate area specified herein and within the Contractors Quality Control Inspection and Test Plan as part of Section 01 45 00 – Quality Assurance / Quality Control. Submit completed installation verification checklists for work included in the commissioning test.

3.04 LEVEL 1 INSTALLATION VERIFICATION

A. [*Designer: Review identified IV's, E and S tests and add or modify as necessary based on location design for FCS.]*

B. The following installation verification activitiy is required prior to field installation:

1. 2508-IV-01 FCS Factory Tests and Inspections

a. Documentation of factory tests and inspections shall be in accordance with requirements for field control system, as stated in the Contract Documents.

C. The following installation verification activities are required after field installation:

1. 2508-IV-02 FCS enclosures including FCS cabinets and racks.

a. Print and maintain manufacturer shop drawings and wiring diagrams in each provided FCS enclosure.

2. 2508-IV-03 Local FCS HMI.

3. 2508-IV-06 FCS PLCs and Remote I/O.

4. 2508-IV-08 FCS Communication Copper and Fiber Cabling, including:

a. All serial communication cables used in an FCS application as statedin the Contract Documents.

b. All copper (ethernet) cables used in an FCS application as stated in the Contract Documents.

c. All fiber communication cables used in an FCS application as stated in the Contract Documents

d. Interconnections between the DCs to the ITCs.

e. For all instances, verify:

1) Cables are organized

2) Labels match shop drawings

3) Cables are secured to prevent damage and allow access for maintenance

5. 2508-IV-09 FCS Labeling and Identification.

3.05 LEVEL 1 STATIC TESTS (NOT USED)

3.06 LEVEL 1 START-UP

A. 2508-SU-01: FCS Start-up:

1. System/Equipment to be tested:

a. Building Management System (BMS).

b. Emergency Ventilation System (EVS).

2. Functions to be tested:

a. Branch circuit and control power supply connections.

b. Communication protocols between cabinets/enclosures/panels.

c. System diagnostic functions.

3. Conditions of test:

a. Prerequisite: All installation verification activities have been completed.

b. Perform on-site start-up of FCS in accordance with manufacturer's recommended procedures.

c. Perform on-site start-up of all EVS Control Panels in accordance with manufacturer's recommended procedures.

4. Acceptable Results:

a. Start-up test functions demonstrate acceptable results.

b. Acceptable results of start-up procedures in accordance with manufacturer's recommendations.

3.07 LEVEL 1 COMPONENT TESTS (NOT USED)

3.08 LEVEL 1 EQUIPMENT TESTS (NOT USED)

3.09 LEVEL 1 SYSTEM TESTS

A. 2508-S-01: Operator Interfaces:

1. System/equipment to be tested: Operator Interfaces:

a. BMS HMI.

b. EVS HMI

2. Functions to be tested:

a. Access to all station equipment and systems on BMS via the BMS log-in screen; will utilize the programming and control commands, control software programming languages, and graphical representations.

b. Access to all station equipment and systems on EVS via the EVCP log-in screen; will utilize the programming and control commands, control software programming languages, and graphical representations.

c. Access to EVS fan and damper equipment and systems on EVS via the distributed control panel screens; will utilize the programming and control commands, control software programming languages, and graphical representations.

3. Conditions of the test:

a. Demonstrate input, output and programming access at the FCS HMI:

1) Operator selected display of input/output data in tabular or graphic format.

2) Equipment dynamic graphics.

3) System dynamic graphics.

4) Equipment status.

5) Equipment commands, including start/stop, open/close.

6) Analog input values.

7) Analog output values

8) Digital input values.

9) Digital output values.

10) Logs and reports.

11) Change analog limits.

12) Add, delete, or change points within each control unit or application routine.

13) Change point input/output descriptors, status, alarm descriptors, and engineering unit descriptors.

14) Add new control units to system.

15) Modify and set up maintenance scheduling parameters.

16) Develop, modify, delete or display full range of color graphic displays.

17) Automatically archive select data even when running third party software.

18) Provide capability to sort and extract data from archived files and to generate custom reports.

19) Operator selectable output of screen graphical images, data trend logs, and/or alarm summary information.

20) Automatic time and date stamped output of all system alarms and automatic or manual control system actions.

21) Select daily, weekly or monthly as scheduled frequency to synchronize time and date in digital control units. Accommodate daylight savings time adjustments.

22) Print selected control unit database to PDF.

23) Add and delete points.

24) Modify any point parameter.

25) Change, add, or delete English language descriptors.

26) Add, modify, or delete alarm limits.

27) Add, modify, or delete points in start/stop programs, trend logs, etc.

28) Create custom relationship between points.

29) Create or modify control loops and parameters.

30) Create or modify override parameters.

31) Add, modify, and delete any applications program.

32) Add, delete, develop, or modify dynamic color graphic displays.

4. Acceptance Criteria:

a. Inputs, outputs, graphics and control appear at the FCS HMIs.

B. 2508-S-02: Control Redundancy:

1. System/equipment to be tested:

a. PLC CPU and Remote I/O control and communication redundancy.

b. BMS I/O processing system.

c. EVS I/O processing system.

2. Functions to be tested:

a. Seamless switchover from failed unit/communication facility.

3. Conditions of the test:

a. Disconnect power from active Ethernet switch.

b. Restore power to the Ethernet switch.

c. Disconnect power from active BMS server.

d. Restore power to the BMS server.

e. Disconnect power from active BMS control chassis.

f. Restore power to the active BMS control chassis.

g. Disconnect power from active EVS control chassis.

h. Restore power to the active EVS control chassis.

i. Disconnect a communication cable.

j. Reconnect a communication cable.

4. Acceptance Criteria:

a. Under all conditions, disabling an active component results in the associated redundant unit assuming the functions of the disabled unit without loss of control or communication. During the switchover, outputs shall experience a bump-free switchover. For example, outputs are maintained in their current state and do not revert to a previous state. On restoration of power the equipment returns to normal operation.

b. Under all conditions, disabling an active controller, Ethernet switch, or communication cable results in an alarm at the LCC. Restoration of the equipment clears the alarm.

C. 2508-S-03: System Response Time:

1. System/equipment to be tested:

a. FCS controllers.

b. FCS communication.

2. Functions to be tested:

a. Speed of response and communication of inputs and outputs.

3. Conditions of the test:

a. Create a change of status input of a digital-monitored device.

b. Create a change of value at an analog input device.

c. Create a digital output to a digital-monitored device.

4. Acceptance Criteria:

a. Digital input changes: Indicated on HMI displays within a maximum of 2 seconds following field device change.

b. Analog input changes beyond a change detection threshold: Indicated on HMI displays within a maximum of 5 seconds following field device change.

c. Digital output commands entered at the HMI: Executed in the field within a maximum of 2 seconds following command execution.

D. 2508-S-04: FCS Alarm Processing:

1. System/equipment to be tested:

a. FCS.

2. Functions to be tested:

a. Alarm generation and notification.

3. Conditions of the test:

a. Abnormal condition: Create abnormal condition.

b. Critical alarm or change of state: Create critical alarm.

c. Display alarm reports on video.

d. Time delay for equipment start-up or shutdown.

e. Unique routing of specific alarms. Generate alarms that are specified for unique routing.

f. Demonstrate selectable configuration of whether alarm requires acknowledgment.

g. Unacknowledged alarms after return to normal. Restore normal operation without acknowledging alarm.

h. Demonstrate alarm notification modes.

4. Acceptance Criteria:

a. Abnormal condition: Cause alarm and appropriate message, including time, system, point descriptor, and alarm condition.

b. Critical alarm or change-of-state: Display message, stored on disk for review and sort, or print.

c. Display alarm reports on video. Display multiple alarms in order of occurrence.

d. Capable of defining time delay for equipment start-up or shutdown.

e. Allow unique routing of specific alarms.

f. Operator selectable configuration specifies if alarm requires acknowledgment.

g. Continue to indicate unacknowledged alarms after return to normal.

h. Alarm notification actions:

1) Display indicating alarm condition.

2) Selectable audible alarm indication

E. 2508-S-05: FCS Diagnostic Alarms:

1. System/equipment to be tested:

a. FCS controllers, including controller chassis, I/O chassis, PLC processor.

b. FCS communication.

2. Functions to be tested:

a. Response to detectable, non-fatal faults in the controller chassis or IO chassis.

1) Provide a summary PLC warning alarm for all detectable, non-fatal faults in the controller chassis or I/O chassis.

2) Provide a summary PLC fail alarm for major faults including failure of either PLC processor.

b. Response to major faults including failure of either PLC processor.

3. Conditions of the test:

a. Initiate detectable, non-fatal faults in controller chassis.

b. Initiate detectable, non-fatal faults in I/O chassis.

c. Simulate failure of PLC processor.

4. Acceptance Criteria:

a. System generates summary PLC warning alarm for detectable, non-fatal faults in the controller chassis.

b. System generates summary PLC warning alarm for detectable, non-fatal faults in the I/O chassis.

c. System generates summary PLC fail alarm for major faults, including failure of PLC processor

F. 2508-S-06: FCS interface to the following: Distribution cabinet terminal strip, interface terminal cabinet terminal strip, and field equipment terminals:

1. System/equipment to be tested:

   a. FCS discrete I/O modules

   b. FCS PLC interface to terminal strips

   c. FCS inputs and outputs

2. Functions to be tested:

   a. Point level supervisory diagnostic capabilities

3. Conditions of the test:

   a. At the terminal strip for a normally open alarm point simulate a contact closure

   b. At the terminal strip for a normally closed alarm point simulate a contact open.

   c. At the terminal strip for an analog point simulate the value going from minimum to maximum.

   d. At the terminal strip for outputs simulate the following conditions in the below sequence:

      1) Off-state.

      2) No-load.

      3) On-state.

4. Acceptance Criteria:

   a. FCS HMI initiates alarm and correctly identifies the close (for normally open contact).

   b. FCS HMI initiates alarm and correctly identifies the open (for normally closed contact).

   c. FCS HMI show change from high to low value.

   d. The terminal strip show control pulse on the point.

G. 2508-S-07: Control Loop Tuning and Stability:

1. System/equipment to be tested:

   a. Each FCS control loop that consists of controller logic that monitors one or more process variable inputs, generates an analog or discrete control variable output that drives field equipment, and responds to a set point.

   b. Field instrumentation that monitors field conditions, including temperature, pressure, etc.

   c. Field equipment acted upon by the controller, including actuators, temperature control equipment, variable speed motors, etc.

d. HMI screens that display process, control, and set point variables associated with a PLC or equipment controller.

2. Functions to be tested:

a. Control loop adjustability and stability.

3. Conditions of the test:

a. Initiate a step change to the system by adjusting the loop set point up and down by 10 percent. Execute for each of the low, mid, and high portion of the adjustability range.

b. Disable and re-enable the field equipment to ensure the system recovers after disabling or failure.

c. Disable and re-enable the process variable instrument(s) to ensure the system recovers.

4. Acceptance Criteria:

a. Actuated field equipment responds to a change in set point without oscillation or excessive response delay, as demonstrated by HMI trends.

b. Zero difference after response delay between the commanded set point and measured process value as demonstrated by HMI trends.

c. The criteria described above are satisfied over the range of expected set points defined by the sequence of operation and the range of anticipated environmental conditions.

3.10 LEVEL 2 INTRA-STATION SYSTEM INTERFACE TESTING REQUIREMENTS

A. 2508-IS-01: HVAC Sequence of Operation:

1. [Designer: Review and add to or modify list as necessary based on location design. Coordinate with Division 23.]

2. System/Equipment to be tested:

a. Associated HVAC equipment as described in the Contract Documents.

b. FCS.

3. Functions to be tested:

a. All HVAC I/O in the FCS Points List.

b. All HVAC control logic and sequences of operation

4. Conditions of the test:

a. Prerequisites: Completion with acceptable results of Level 1 and Level 2 commissioning activities specified for System/equipment to be tested.

b. Verify display of specified parameters.

c. Create a change of state for each of the HVAC I/O points.

d. Send a digital output to each of the controls points in the HVAC I/O points.

e. Simulate the logic with required inputs to the FCS for control logic described in the mechanical subset.

5. Acceptable Results:

a. HVAC operating parameters are displayed correctly at the FCS HMI.

b. HVAC indications and alarms are annunciated correctly at the FCS HMI.

6. FCS perform logic the logic by providing the indicated displays and outputs as described for the HVAC control logic described in the Contract Documents.

B. 2508-IS-02: FACP Incident Response:

1. [Designer: Review and add to or modify list as necessary based on location design. Coordinate with Division 28.]

2. System/equipment to be tested:

a. Fire alarm control panel (FACP).

b. FCS controllers.

c. FCS HMIs.

3. Functions to be tested:

a. FCS response to FACP incident event.

b. FACP response to FCS initiated event.

4. Conditions of the test:

a. Initiate an incident condition signal on FACP.

b. Initiate an incident condition on the FCS.

5. Acceptance Criteria:

a. The Fire Alarm system generates a zone specific serial message of a detected event within the station.

b. The FCS receives the indication from the FACP and provides a color change indication of the affected station zone on the FCS HMI's.

c. The FACP receives the signal from the FCS corresponding to an event initiated on the FCS and responds by sending appropriate feedback to the FCS.

d. The FCS executes the proper ventilation, HVAC, and station equipment operating configuration based on the applicable sequence of operations shown on the emergency response matrix, the Plans and in the related Sections, and transmits the recommended configuration and ready status to the FCS Link Control Interface.

e. Incident response status, alarm, and control information is displayed on the BMS workstation console and the EVCP.

f. FCS automatically postures the station systems and equipment in the required configuration and initiates operation.

g. FCS maintains equipment in its response state until smoke/fire event has been ‘Cleared’ at the FCC.

h. Upon receipt of confirmation of event ending, FCS operator returns all ventilation, HVAC, and station equipment to normal operating configurations and states.

C. 2508-IS-03: HVAC – Fire Alarm Response:

1. *[Designer: Review and add to or modify list as necessary based on location design. Coordinate with Division 23, 28.]*

2. System/equipment to be tested:

a. HVAC units (i.e. Air Handling Units, Air Conditioning Units) and associated control devices.

b. Supply and exhaust fans.

c. Electric heating coils.

d. Fire smoke dampers.

e. Duct smoke detectors, where applicable.

f. Fire alarm system.

3. Functions to be tested:

a. Response of HVAC equipment and associated devices to fire alarm.

b. Response of HVAC equipment and associated devices to duct smoke detection, where applicable.

c. Response of HVAC equipment and associated devices to fire department override.

4. Conditions of the test:

a. Prerequisites: Completion with acceptable results of Level 1 and Level 2 commissioning activities specified for system/equipment to be tested.

b. Operate HVAC equipment in an unoccupied mode. Initiate a fire alarm.

c. If provided at the fire alarm control panel, override equipment shutdown.

d. Operate HVAC equipment in unoccupied mode with a call for heating. Initiate a fire alarm.

e. If provided at the fire alarm control panel, override equipment shutdown.

f. Operate HVAC equipment in unoccupied mode with a call for cooling. Initiate a fire alarm.

g. If provided at the fire alarm control panel, override equipment shutdown.

h. For equipment with duct smoke detection, operate in unoccupied mode and cause the duct smoke detector to activate.

i. Repeat conditions of the test with equipment in occupied mode.

5. Acceptance Criteria:

a. Documented completion of prerequisites.

b. For all conditions, HMI accurately reflects status of equipment and positions of devices.

c. Confirm HVAC equipment responds as described in the Contract Documents

D. 2508-IS-04: Non-Pressurized Elevator Hoistway Damper Response to Fire Alarm:

1. [Designer: Review and add to or modify list as necessary based on location design. Coordinate with Division 23, 28.]

2. System/equipment to be tested:

a. Fire smoke dampers.

b. FCS.

c. Fire alarm system.

3. Functions to be tested:

a. Damper response to fire alarm.

4. Conditions of the test:

a. Prerequisites: Completion with acceptable results of Level 1 and Level 2 commissioning activities specified in Section requirements for commissioning of HVAC systems, as stated in the Contract Documents for System/equipment to be tested.

b. Initiate a fire alarm from a random fire or smoke detector.

1) With outside air temperature below 78 degrees Fahrenheit (damper closed).

2) With outside air temperature above 78 degrees Fahrenheit (damper open).

c. Clear the alarm.

5. Acceptance Criteria:

a. Documented completion of prerequisites.

b. Damper: Open under all conditions.

c. Damper: Closed when outside air temperature is below 78 degrees Fahrenheit, else open.

E. 2508-IS-05: Stair and Elevator Pressure Control:

1. [Designer: Review and add to or modify list as necessary based on location design. Coordinate with Division 23, 28.]

2. System/equipment to be tested:

a. FCS.

b. HVAC equipment, including fans and dampers.

c. Fire alarm system.

3. Functions to be tested:

a. Control of excess air pressure differential between passenger platform and stairways and elevator shafts.

b. Fan and damper response to fire alarm and FCS signal.

4. Conditions of the test:

a. Initiate a fire alarm from a random fire or smoke detector.

b. Initiate EVS exhaust mode signal.

c. Initiate EVS supply mode signal.

5. Acceptance Criteria:

a. The system performs as described for the stair pressurization control logic in the mechanical subset.

F. 2508-IS-06: Access Control Response to Fire Alarm:

1. [Designer: Review and add to or modify list as necessary based on location design. Coordinate with Division 23, 28.]

2. System/equipment to be tested:

a. Fire alarm control panel (FACP).

b. Overhead coiling doors, roll up grilles, vertical lift gates, and/or egress doors, associated access control devices.

3. Functions to be tested:

a. Overhead coiling doors, roll up grilles, vertical lift gates, and/or egress doors response to FACP incident event.

4. Conditions of the test:

a. With openings in open position, initiate an incident condition signal on FACP.

b. With openings coiling door in closed position, initiate an incident condition signal on FACP.

5. Acceptance Criteria:

a. Overhead coiling doors, roll up grilles, vertical lift gates, and/or egress doors respond to FACP incident according to sequence of operation described in the Contract Documents.

G. 2508-IS-07: External Control and Monitoring Interfaces:

1. [Designer: Review and add to or modify list as necessary based on location design. Coordinate with other disciplines.]

2. System/equipment to be tested:

a. FCS I/O connections to external control and monitoring interface terminal strips.

b. [Designer: Review identified systems and add to list or modify as necessary based on location design. Coordinate with other Divisions.]

3. Functions to be tested:

a. External monitoring of FCS points: digital and analog.

b. External control of FCS points: digital.

4. Conditions of the test:

a. FCS outputs to external interface: Verify accuracy of control parameter value represented at the external interface, relative to the value reported at the HMI for the same parameter.

b. External interface inputs to FCS: Verify FCS response to external interface inputs is accurate.

5. Acceptance Criteria:

a. FCS outputs to external interface are accurately represented at the external interface, relative to the value reported at the HMI for the same parameter.

b. FCS response to external interface inputs is accurate.

H. 2508-IS-08: Gas Detection Responses:

1. [Designer: Review and add to or modify list as necessary based on location design. Coordinate with Division 23, 28.]

2. System/equipment to be tested:

a. All gas detection devices used in BMS applications including for carbon monoxide (CO), nitrogen dioxide (NO2), and/or hydrogen (H2) detection.

b. Associated exhaust/ventilation fans and dampers.

3. Functions to be tested:

a. Fan response to schedule.

b. Fan response to gas detection alarms.

c. Fan alternation if applicable.

d. Fan failover if applicable.

4. Conditions of the test:

a. Exceed gas detection alarm setpoints via calibration kits at the detection device or alternate method as detailed in commissioning form procedures

b. Occupied and unoccupied modes.

5. Acceptance Criteria:

a. Fans and dampers respond as intended.

b. Alarms are indicated and logged.

I. 2508-IS-09: Fan/Damper Control Panel (FDCP)

1. *[Designer: Review and add to or modify list as necessary based on location design. Coordinate with Division 23, 26, 28.]*

2. System/equipment to be tested:

a. FDCP.

b. Fan Motor Soft Starter.

c. Ventilation Fan.

d. Fan Status Monitoring Instrumentation.

e. Ventilation Dampers.

f. Damper Motorized Actuators.

g. Damper Status Monitoring Instrumentation.

3. Functions to be tested:

a. Damper response to FDCP control devices.

b. Fan response to FDCP control devices.

c. Damper response to FDCP control devices.

d. Damper response to EVS control signals.

e. Fan and damper FDCP hardwired interlocks.

f. Fan and damper EVS programmed interlocks.

g. EVS Response to fan status signals and generation of alarms.

h. EVS Response to damper status signals and generation of alarms.

4. Conditions of the test:

a. Fans and dampers energized.

b. FDCP in “Local” mode.

c. FDCP in “Remote” mode (EVS Control).

5. Acceptance Criteria:

a. The FDCP control and indication devices operate as intended.

b. The fans, dampers, and all hardwired and programmed interlocks operate as intended.

c. Appropriate alarms are indicated and logged.

J. 2508-IS-10: Pump Station Control:

1. *[Designer: Review and add to or modify list as necessary based on location design. Coordinate with Division 22.]*

2. System/equipment to be tested:

   a. Pump Station controller (PLC).

   b. FCS controller.

3. Functions to be tested:

   a. Correct mapping of PLC I/O points in FCS.

   b. Monitoring PLC inputs by FCS.

4. Conditions of the test:

   a. One by one, alter the values of inputs monitored by the FCS by changing the physical condition of the input sensed by the FCS.

5. Acceptance Criteria:

   a. Sensed condition is reported correctly by FCS.

3.11 LEVEL 1 AND LEVEL 2 TEST REQUIREMENTS MATRIX

	2508-IV-0X	**2508-ST-0X**	**2508-SU-0X**	**2508-C-0X**	**2508-E-0X**	**2508-S-0X**	**2508-IS-0X**
Factory Tests and Inspections	X						
Enclosures	X						
Local HMI	X						
Controllers and RIO	X						
Communication Cabling	X						
Labeling and Identification	X						
Startup Building Management System (BMS)			X				
Startup Emergency Ventilation System (EVS)			X				
Operator Interface – BMS HMI						X	
Operator Interface – EVS HMI						X	
FCS Control Redundancy						X	
FCS System Response Time						X	
FCS Alarm Processing						X	
FCS Diagnostic Alarms						X	
FCS Interface to DC, ITC, and field equipment terminals						X	
HVAC Sequence of Operation							X
FACP Incident Response							X
HVAC Incident Response							X
Non-Pressurized							X

	2508-IV-0X	2508-ST-0X	2508-SU-0X	2508-C-0X	2508-E-0X	2508-S-0X	2508-IS-0X
Stair and Elevator Pressure							X
Access Control Incident Response							X
External Control and Monitoring Interface							X
Gas Detection Responses							X
Fan/Damper Control Panel							X
Pump Station Control							X

[DESIGNER: ADD OR MODIFY MATRIX AS NECESSARY BASED ON TESTS ADDED OR MODIFIED ABOVE DEPENDING UPON THE LOCATION DESIGN FOR FCS]

3.12 LEVEL 3 INTER-STATION SYSTEM INTERFACE TEST REQUIREMENTS

A. Integrated EVS Tests: Provide testing of the integrated EVS system that includes all stations:

1. Provide testing to ensure the EVS response at each new station functions as indicated in the ERM when relevant commands are initiated remotely from any location in the system.

B. Systems Integrated Test: Support the testing program to ensure the correct exchange of signals between this Contract BMS and the SCADA system at LCC (supplied by the Systems contractor):

1. Contract drawings provide details for interface terminals. Coordinate final signal and conductor requirements with equipment.

2. In cases where the FCS or Contractor provided equipment communicates to equipment provided by another contract, through a serial or network interface, proceed as follows:

a. Use the approved System Interface Data Table (SIDT) as Certified Test Reports to test the functionality of signals to and from the interfaced equipment. Initial and date each signal when the signal performs as stated. After signals have been successfully tested, submit the completed tables to the Resident Engineer in a Final Test Report.

b. Each individual piece of interfaced equipment should be included in the SIDT with fields completed as described in the FCS subset drawings. Equipment with these types of interface includes FCS, and potentially fire alarm control panels.

C. System-Wide Integrated Test Support: During the system-wide integrated testing period, provide adequate supervisory mechanical and electrical support personnel to adjust equipment and troubleshoot system failures that might arise. The Link Systems Integration Team conducts system-wide integrated tests with the assistance from Contractor, Construction Management, Operations, and the final design consultant. Systems will be tested together during System-wide Integrated Testing to ensure proper functionality, inter-operability, and reliability of systems necessary for operation.

1. Coordinate with Sound Transit's Start-Up Manager: The system-wide integrated testing period shall occur before pre-revenue testing.

3.13 LEVEL 3 COORDINATION WITH OTHER CONTRACTORS

A. Provide as-built copies of the SIDT to Sound Transit when required by the Contract. These are necessary for the contractors to design their control system.

B. Continuity Testing: To expedite continuity testing, supply as-built SIDTs within thirty days after all points have been successfully tested and signed-off.

C. Control System Testing: Following the continuity testing, other contractors will verify the functionality of integration of this Contract controls with that of other contracts. The Control System Testing period will last 30 days. This period begins when Systems Integration Testing has been completed.

D. During the Continuity Testing and Control System Testing periods, perform the following:

1. Jointly field test points with the contractors and verify the operation and monitoring of equipment as shown on the Contract Drawings, wiring diagrams, and SIDT.

2. Be present during this testing period with adequate labor and support personnel to adjust equipment and troubleshoot system failures that might arise. When a piece of mechanical or electrical equipment is found to be in conflict with specific criteria, have an experienced representative of the manufacturer make an adjustment to the item. If adjustments fail to correct the operation of a piece of equipment or fixture, remove the equipment or fixture from the Contract site and replace it with a workable replacement that will meet the specification requirements.

3.14 LEVEL 3 AND LEVEL 4 SYSTEM TESTS

A. System Test checklists are required to include the following, at a minimum:

1. 2508-ISIS-01: Central BMS Integration:

a. System / Equipment to be tested:

1) FCS controller to Central BMS servers communication.

2) Additional BMS workstation to Central BMS communication.

3) Central BMS server configuration and functionatlity for additional locations.

4) Central BMS servers are existing. Configuration is updated to include additional locations.

b. Functions to be tested:

1) Screen elements, data logging, alarming, data historian, and trending functions of the Central BMS servers for added locations are available at BMS workstations.

c. Conditions of test:

1) Level 1 and 2 commissioning activities completed.

2) Network communication between FCS controllers and central SCADA servers are operational and perform as expected.

d. Acceptable Results:

1) Screen elements, data logging, alarming, data historian, and trending functions of the Central Cimplicity BMS servers for added locations are available at BMS workstations and are functioning correctly.

2. 2508-ISIS-02: Central EPMS Integration:

a. System / Equipment to be tested:

1) Submeter to Central WinPM.Net server communication.

2) Central EPMS server configuration and functionality for additional submeters.

3) Central EPMS server is existing. Configuration is updated to include additional submeters.

b. Functions to be tested:

1) Screen elements, data logging, alarming, data historian, and trending functions of the Central EPMS server for additional submeters.

c. Conditions of test:

1) Level 1 commissioning activities for submeters is completed.

2) Communication between submeters and the Central EPMS server are operational and perform as expected.

d. Acceptable Results:

1) Screen elements, data logging, alarming, data historian, and trending functions of the Central EPMS server for additional submeters are functioning correctly.

3.15 LEVEL 3 AND LEVEL 4 TEST REQUIREMENTS MATRIX

	2508-ISIS-0X
Central BMS Integration	X
Central EPMS Integration	X

[DESIGNER: ADD OR MODIFY MATRIX AS NECESSARY BASED ON TESTS ADDED OR MODIFIED ABOVE DEPENDING UPON THE LOCATION DESIGN FOR BMS]

END OF SECTION

EXHIBITS

1. **Exhibit A: Example Test Procedure** (On Proceeding Pages)

EXHIBIT A

EXAMPLE TEST PROCEDURE

3.16 TEST INFORMATION

Test ID:	*2508-S-01 FCS Operator Interface*
Date Time and Location:	
First Test, Repeat Test or Demonstration:	
Equipment IDs:	

3.17 OBJECTIVES

A. Verify performance of BMS Operator Interface (HMI)

B. Reference appropriate specification section.

3.18 SYSTEMS AND EQUIPMENT TO BE TESTED

A. Access to all station equipment and systems on BMS via the BMS log-in screen; will utilize the programming and control commands, control software programming languages, and graphical representations.

3.19 PREREQUISITES

A.	BMS equipment communicates successfully over network	Y___N___
B.	BMS equipment has passed Start-Up test	Y___N___
C.	System alarm log captured prior to testing	Y___N___

3.20 MINIMUM PARTICIPANTS

A. Test Technician

B. Owner's Witness

3.21 TEST PROCEDURE

A. In accordance with general conditions of the contract, contractor shall be responsible for initiating, maintaining, and supervising all safety precautions and programs in connection with the performance of this test. Stop the test and notify the owner if it is determined that any part of the test cannot be performed safely.

B. Perform and document the following steps in the order listed. Acceptance criteria are listed below each step.

C.	To verify proper functionality of the BMS operator interface, demonstrate the following on the BMS HMI:	
1.	Operator selected display of input/output data in tabular or graphic format.	PASS___ FAIL___
2.	Equipment dynamic graphics	PASS___ FAIL___
3.	System dynamic graphics	PASS___ FAIL___
4.	Equipment status	PASS___ FAIL___
5.	Equipment commands including start/stop, open/close	PASS___ FAIL___
6.	Analog input values read expected values correctly	PASS___ FAIL___
7.	Analog output values read expected values correctly	PASS___ FAIL___
8.	Digital input values read expected values correctly	PASS___ FAIL___
9.	Digital output values read expected values correctly	PASS___ FAIL___
10.	Networked input values read expected values correctly	PASS___ FAIL___
11.	Networked output values read expected values correctly	PASS___ FAIL___
12.	Logs and reports functional	PASS___ FAIL___
13.	Analog setpoint changes demonstrated	PASS___ FAIL___
14.	Ability to add, delete, modify points demonstrated	PASS___ FAIL___
15.	Ability to modify point descriptions, status, alarms and engineering units demonstrated	PASS___ FAIL___
16.	Ability to develop, modify, delete or display full range of color graphic displays	PASS___ FAIL___
17.	Automatically archive select data while running third party software	PASS___ FAIL___

18.	Capability to sort and extract data from archived files and generate custom reports	PASS___ FAIL___
19.	Operator selectable output of screen graphical images, data trend logs, and alarm summary information	PASS___ FAIL___
20.	Automatic time and date stamped output of all system alarms and automatic or manual control system actions	PASS___ FAIL___
21.	Machine date and time settings accurate	PASS___ FAIL___
22.	Demonstrate ability to export HMI point configurations to .csv or other acceptable file format	PASS___ FAIL___
23.	Ability to start/stop HMI program demonstrated, printed instructions are posted near installation	PASS___ FAIL___
24.	Ability to override point values and other parameters demonstrated	PASS___ FAIL___

3.22 ACCEPTANCE CRITERIA

A. Observed results shall comply with acceptance criteria in the procedure above.

3.23 TEST RESULTS

A. Record test conditions and results on the Test Procedure in the spaces provided above at the time of the test. Record results legibly in ink.

3.24 OBSERVATIONS NOTED OR CORRECTIVE ACTIONS REQUIRED

#	Description	Resolution	Retest Req'd
			Y___N___
			Y___N___

3.25 SIGNATURES

A. The undersigned have witnessed the above test and verified that the test was performed in accordance with the Approved Commissioning Test Procedure and that the results recorded were the actual results observed.

1. Format: COMPANY / PRINT NAME / SIGNATURE / DATE

B. Installing Contractor: _____

C. Owner Witness Signature: _____

D. Additional Witnesses: Contractor: _____

END OF EXHIBITS

SECTION 25 50 00

INTEGRATED AUTOMATION FACILITY CONTROLS

PART 1 - GENERAL

1.01 SUMMARY

A. This Section includes:

1. Requirements for the building management system (BMS) equipment for garages and support facilities. BMS equipment includes ventilation, electrical, communications system (by systems contract) and mechanical system components, including control components for units that are not supplied with factory-wired controls. Items to be furnished include control equipment and software programming as well as communications and data transmission equipment and related software programming.

1.02 REFERENCES

A. This Section incorporates by reference the latest revisions of the following documents:

1. American National Standards Institute (ANSI):

a. ANSI T1.329 Network Equipment - Earthquake Resistance.

2. Institute of Electrical and Electronics Engineers (IEEE):

a. IEEE C37.90.1 Surge Withstand Capability (SWC) Tests for Relays and Relay Systems Associated with Electric Power Apparatus.

b. IEEE C62.41.1 Guide on the Surge Environment in Low-Voltage (1000 V and Less) AC Power Circuits.

3. National Electrical Manufacturers Association (NEMA):

a. NEMA IA 2.3 Programmable Controllers Part 3: Programming Languages.

b. NEMA ICS 1 Industrial Control and Systems General Requirements.

c. NEMA ICS 1.1 Safety Guidelines for the Application, Installation, and Maintenance of Solid State Control.

d. NEMA ICS 2 Controllers, Contactors and Overload Relays Rated 600 Volts.

e. NEMA ICS 4 Application Guide for Terminal Blocks.

f. NEMA ICS 6 Enclosures.

4. National Fire Protection Agency (NFPA):

a. NFPA 70 National Electrical Code

b. NFPA 72 National Fire Alarm and Signaling Code.

c. NFPA 130 Standard for Fixed Guideway Transit and Passenger Rail Systems.

5. Underwriters Laboratory (UL):

a. UL 50 Standard for Safety Enclosures for Electrical Equipment, Non-Environmental Considerations.

b. UL 508A Standard for Safety of Industrial Control Panels.

c. UL 60947-4-1 Standard for Safety Low-Voltage Switchgear and Controlgear – Part 4-1: Contractors and Motor-Starters – Electromechanical Contractors and Motor-Starters.

d. UL 60947-5-1 Standard for Safety Low-Voltage Switchgear and Controlgear – Part 5-1: Control Circuit Devices and Switching Elements - Electromechanical Control Circuit Devices.

6. Military Specification (MIL):

a. MIL-STD 1472G – Human Engineering.

7. Telcordia:

a. GR-63-CORE NEBS Requirements: Physical Protection for Fiber Distributing Frames.

1.03 SUBMITTALS

A. Reference Submittal Procedures as stated in the Contract Documents.

B. Submit:

1. Equipment Integration Plan. Provide a plan that includes allowances for regular status review meetings with Sound Transit representatives during factory testing, installation and commissioning to ensure interoperability with existing and future systems. Include a description for how:

a. The designs are integrated within this scope of work, including identifying coordination meetings with appropriate sub-contractors, such as Mechanical, Fire alarm, Access Control, and Electrical.

b. The design and installation are integrated with the existing Sound Transit Tridium Niagara Framework infrastructure.

c. How work and submittals will be sequenced with the Systems Contractor to ensure integration.

2. Submit the items described below:

a. Shop Drawings containing the following information for each BMS control panel and enclosure:

1) Include the product data for each type of product specified within the Shop Drawing submittal. Include manufacturer's technical Product Data for each BMS system component furnished, indicating dimensions, capacities, performance characteristics, electrical characteristics, finishes of materials, installation instructions, and startup.

2) Hardware and software bill of materials.

3) Drawing List.

4) Equipment assembly details, including components and indicating dimensions, weights, loadings, required clearances, method of field assembly, and location and characteristics of each field connection.

5) Listing of connected data points, including connected control units and input devices. See BMS drawing subset for a list of I/O points. The Contractor shall confirm all points required to perform control logic is included in the list and if not add required I/O to be able to perform the logic.

6) Each control device labeled with setting or adjustable range of control.

7) Diagrams for all required interconnecting wiring. Clearly differentiate between factory-installed and field-installed wiring.

8) Each conductor labeled utilizing identifying labels.

9) Manufacturer's general and detail arrangement drawings for switches and enclosures.

10) Provide all dimensions including enclosure.

11) System configuration showing I/O and peripheral devices, power supplies, diagrams, and interconnections.

12) Details of interface terminal cabinets (ITC), control panel and enclosure faces, including controls, instruments, and labeling.

13) Each I/O point labeled utilizing unique identifying labels. Use indicated labels where shown on the Plans.

14) Wiring diagrams detailing wiring for power, signal, and communications systems and differentiating clearly between manufacturer-installed and field-installed wiring.

15) Schematic flow diagram showing HVAC, dampers, and other control devices served.

b. Human Machine Interface (HMI) system graphics indicating monitored systems and devices, data (connected and calculated) point addresses, and operator notations. A representative sample of full scale, full color HMI prototypes of each type of screen shot in both hard copy and soft copy format:

1) Process screens.

2) Process and alarms screens.

3) Diagnostic and status screens.

4) Trending and logging screens.

a) Data shall be recorded continuously with a minimum of two years available for trend displays.

b) Coordinate method for data storage with Sound Transit.

5) HMI description, including.

6) Narrative overview of HMI describing navigation between categories and views, including popups:

a) Description of equipment status display and alarm visibility convention.

b) Written sequence of operation for each category providing logic and control, including set points. For I/O be passed through or monitored only, provide an explanation of screens and status indications.

c. Control programs, fully annotated to describe the function of each programming element and each functional segment.

d. IP Address List for all contractor-provided BMS devices connected on a network:

1) Develop and assign unique addresses based on Sound Transit guidance.

e. Monitored/Controlled equipment list.

3. Testing, Commissioning, and Training Plans:

a. Factory Testing:

1) Submit a factory test plan and test procedure. This correlates to BMS Factory Tests and Inspection commissioning activities as stated in the Contract Documents.

b. Commissioning:

1) Reference General Commissioning Requirements specification stated in the Contract Documents.

2) Support the project's Testing and Commissioning Manager with the planning and execution of tasks involving Division 25 components.

3) Plans for a factory test must be submitted and approved prior to scheduled factory acceptance test activities. This procedure shall include detailed procedures and forms for performing Factory Acceptance Tests necessary to verify the performance of all active components in the BMS.

c. Training:

1) Reference Training specification stated in the Contract Documents.

2) Submit a plan and course materials in digital format to be used for BMS training, tailored to the following departments:

a) Operations.

b) Maintenance.

c) Engineering.

4. Points List:

a. The Contractor is required to submit the Points List 6 months prior to FAT. The Points List must be approved before start of FAT.

b. At a minimum, the Points List shall include point tag ID, point description, point address, digital point state attributes, analog alarm set point information analog range, engineering units, meaningful alarm state description (i.e. all causes for a TROUBLE alarm), and analog alarm attributes:

1) Points List:

a) Comprehensive list of field controller I/O point interfaces that includes both the field side points interfaced to monitored/controlled equipment, and on the HMI side for points developed in field controller logic interfaced through the OPC servers.

b) Include the following columns for descriptive fields for each point:

i) Unique point ID (typically the HMI tagname.

ii) Location: Descriptive name of the garage name, or other location where the point originates.

iii) Equipment: ID of the equipment or device associated with the point.

iv) Field Controller: ID of field controller where the point is read/written.

c) Address of the point in Field Controller memory.

d) Subsystem: BMS.

e) Point Description: Meaningful description for the point. The description should go from general to specific so that alphabetical sorting of the spreadsheet will group points relating to the same device together.

f) Point Type:

i) AI (analog input).

ii) AO (analog output).

iii) DI (discrete input).

iv) DO (discrete output).

v) LAI (logical analog input from field controller to HMI).

vi) LAO (logical analog output to field controller from HMI).

vii) LDI (logical discrete input from field controller to HMI).

viii) LDO (logical discrete output to field controller from HMI).

g) State: For discrete points, a description of the on and off states in the form “On Description/Off Description”. For analog points, enter “NA”.

h) EU: For analog points, the range and units of the scaled point, for example: “0-10 psi”.

i) Alarm: For discrete inputs enter On/Off/None for the active alarm state. For analog inputs enter value.

j) For analog points, enter alarm limit range set points:

i) High-High.

ii) High.

iii) Low.

iv) Low-Low.

k) Indicate whether point is logged in the historical database. Logging of the following points are required, at minimum:

i) All analog points.

ii) All alarms.

iii) All discrete inputs.

5. Closeout Submittals:

a. Contract Records: Record actual locations of control components, including all field components and sensors. Revise Shop Drawings to reflect actual installation and operating sequences. Include all data specified in "Submittals" in final "Record Documents" form.

b. Provide Operation and Maintenance Manuals:

1) Furnish an operation and maintenance manual for each piece of equipment, unless otherwise specified herein. The manual shall be loose leaf bound and shall include, but not necessarily be limited to, the following information:

a) Operating instructions.

b) Troubleshooting and fault isolation procedures for on- site level repair.

c) Equipment replacement procedures.

d) Disassembly and reassembly instructions.

e) A list of the components that are replaceable at the three possible levels of maintenance: on site, department shop, and the manufacturer's facility.

f) A test procedure to verify the adequacy of repair work.

g) A preventive maintenance schedule and instructions for the replacement of any electrical equipment, e.g., I/O cards, software, controller cards, etc.

h) A preventive maintenance schedule for inspection, removal, and replacement for each component.

i) A list of special tools provided by the manufacturer.

j) A list of recommended tools and test equipment required to perform all maintenance tasks.

k) Recommended spare parts list for one year's operation.

l) Interchangeable parts list showing parts common to items of equipment.

m) Equipment manufacturer's' descriptive literature including catalog cuts.

n) Record drawings.

o) The latest service bulletins, with issue dates, that describe service procedures.

p) The software source programs as well as trouble shooting, fault diagnostics, and shutdown procedures.

q) Computer software: Hard and electronic copies of the processor application source code, data table allocations, and descriptions of main software modules.

r) Training materials for BMS system operation and maintenance training sessions as specified herein.

6. Spare Parts: Furnish spare parts in accordance with Article 3.08.

C. Contractor shall submit a pre- final printout of all code and logic following Factory Testing. The code shall be thoroughly documented to clearly explain each rung and block of code or logic.

D. Contractor shall submit a final printout and electronic version of all logic for project closeout. The code shall be thoroughly documented to clearly explain the logic and code.

E. Transmit the following:

1. System Integrators Qualifications. Provide a printed certified qualification resume of the contractor or systems integrator performing the fabrication, configuration, and programming of the BMS components no later than 120 days after NTP

1.04 QUALITY ASSURANCE

A. Manufacturer Qualifications:

1. BMS hardware must be sourced from a limited number of manufacturers to ensure optimal operation and maintenance support. All manufacturers must have a proven track record in manufacturing components with the required capabilities and a successful operational history of at least five years.

2. The programmable controller manufacturer or the manufacturer's approved system integrator shall maintain a national network.

3. To facilitate future support, purchase BMS Controller and remote I/O hardware from a vendor within 150 miles of the Project. Available support within 150 miles of the Project shall include start-up service, emergency service calls, repair work, service contracts, maintenance, and training of personnel.

4. Provide a listing of at least five projects of similar magnitude, complexity and facility use type completed within the past five years.

B. Integrator Qualifications:

1. The contractor or integrator shall have a minimum of 5 years' experience related to design, fabrication, programming, installation, start-up, and testing of similar control systems.

2. If more than one Contractor or systems integrator is employed, submit a certified resume for each one indicating their specific specialty and item of work.

3. Demonstration of technical competency with BMS system manufacturers is required through relevant certifications or reference letters from manufacturers/vendors, or hands-on demonstration if requested by the Resident Engineer.

C. Commissioning/Startup Personnel Qualifications: Where necessary, engage specially trained personnel in direct employ of manufacturer of BMS control system components.

1.05 FACTORY TESTS AND INSPECTIONS

A. General:

1. The following specifies the testing requirements for the processor equipment and HMI to be procured under this Contract. All tests described herein shall not preclude any additional standard tests normally performed by the manufacturers for similar equipment or requested by the Resident Engineer to verify performance.

a. Transmit notice of scheduled factory test dates prior to proposed testing date(s). The notification shall include the expected duration and sequence of testing. Observations made during the tests, and test results shall be recorded in a document form acceptable to the Resident Engineer, certified by Contractor and submitted to the Resident Engineer for record before shipping equipment to site. All expenses in connection with or incidental to the testing shall be borne by Contractor excluding Resident Engineer travel expenses.

b. The test procedure specified shall be sequential in the order prescribed. HMI, processor, communications equipment, or any components, which failed to perform as specified, shall be subject to retest at no addition cost to the Agency.

c. All Factory Testing is to be complete prior to commissioning of the system.

B. HMI, Programmable Automation Controller (processor) and Remote I/O System:

1. Arrange for factory testing of HMI, processor, and remote I/O system. Tests shall be witnessed unless otherwise determined by the Engineer.

2. Witnessed Tests shall be tested for operation, sequencing, inter-locking, communications, diagnostics, fault conditions, data logging and alarming functions as outlined in this Specification and the Drawings. All field functions shall be simulated in the factory for the purpose of this test. Witnessed testing activities shall include:

a. Network ping testing.

b. Network configuration verification, including switch and host addressing, redundant media, and switch failure response.

c. Panel and PLC power supply fault response.

d. Simulated field equipment interface for the following:

1) AHUs and ACUs normal and fire response.

2) Fan Coil Unit response.

3) Supply and exhaust fans normal and fire response.

4) Motorized and solenoid actuated dampers and smoke dampers, normal and fire response.

5) FACP.

6) Hydrogen alarm.

7) Clean agent alarm.

8) Lighting controllers.

9) Sump pump controllers.

10) Temperature sensors.

11) Temperature or pressure control loops performed by BMS.

12) Heating equipment.

e. Unwitnessed factory tests and checks shall include:

1) Check of control and power wiring insulation resistance and freedom from shorts and grounds.

3. Input/Output Points Validation Testing:

a. Prepare test forms for all points in the accepted Points List.

b. Add validated column to spreadsheet for witness initials and witnessed date of successful demonstration of the point.

c. Demonstrate correct manipulation of I/O and related functionality to Sound Transit representative in the field.

d. Demonstrate points through actual operation of equipment or demonstration or by simulation if accepted by the Resident Engineer

e. For testing convenience provide tables of the real and logical points in the HMI to easily verify the actual state of each point.

1.06 FIELD MEASUREMENTS

A. Verify field conditions, measurements, and clearances prior to fabrication and installation of BMS system components.

1.07 MAINTENANCE SERVICE

A. There shall be BMS integration support personnel on-call through the below periods.

1. Pre-revenue testing period:

a. Following installation, testing and commissioning, Sound Transit plans to operate the system in a pre-revenue testing mode to understand equipment performance, traction power, train control and related system components.

b. During this phase, the Contractor shall provide on-site technical advisors to assure continued operation of the BMS.

2. After Final Acceptance:

a. Provide support for hardware and software for a year after Final Acceptance.

b. Upon completion of a year of maintenance support system administration right shall transfer solely to Sound Transit.

c. Provide original source code to an escrow account at this time. Sound Transit will take possession of the source code in the account and unrestricted license to it if either the Contractor goes out of business or if the Contractor no longer supports the product(s) directly associated with the source code.

d. Contractor support shall respond to a problem report within 4 hours during normal business hours defined here as 9:00 a.m. to 5:00 p.m. Monday through Friday, Pacific time, and shall respond to a problem within 8 hours at all other times.

3. The programmable controller manufacturer or the manufacturer's approved system integrator shall maintain as part of a national network, engineering service facilities within 150 miles of the project site, to provide start-up service, emergency service calls, repair work, service contracts, maintenance, and training of personnel. Emergency service shall be available within 24 hours of notification. During revenue service operations, the PLC manufacturer shall provide on call support.

B. POWER LINE PROTECTION AND SIZING

1. Equipment connected to ac circuits shall be protected from power-line surges. Equipment protection shall meet the requirements of IEEE C62.41. Fuses shall not be used for surge protection.

2. AC input power loads for the BMS panels, cabinets, and racks connected to the AC distribution system shall be submitted so that upstream distribution overcurrent protection and UPS capacity can be evaluated prior to approval of submittals and BMS panel fabrication.

1.08 DELIVERY, STORAGE AND HANDLING

A. Store equipment and materials inside and protected from weather and other hazards.

PART 2 - PRODUCTS

2.01 SYSTEM DESCRIPTION

A. The BMS control processing equipment shall be comprised of:

1. Controllers including control processors, Ethernet IP modules, Lonworks, and RS485 communication modules.

2. I/O hardware and wiring, including all modules necessary for interface with field devices and controllers.

3. A summary processor warning alarm for all detectable, non-fatal faults in the controller chassis or I/O chassis.

4. A summary processor fail alarm for major faults including failure of a processor.

5. Appropriate analog and discrete I/O processing modules for monitoring and control of garage electrical, mechanical, vertical circulation, communications system (by systems contractor), and garage plumbing systems and equipment.

B. Provide a BMS HMI, equipment, software, and functional programming:

1. The BMS HMIs shall be rack mounted, slide out laptops, and shall allow Operator access to all indicated garage and support facility equipment and systems via the same log-in screen. It shall allow access to programming and control commands, control software programming languages, and graphical representations. Develop dynamic control and monitoring displays representing garage electrical, garage mechanical, vertical circulation, and garage plumbing systems and equipment.

2. Reference EXHIBITS for the display symbols, colors, and layouts that shall be followed to ensure that the HMI graphics provided by the Contractor conform to that at other garages in the system.

3. Contractor shall assume the level of detail, color, symbols and other display attributes shall be similar or the same as the examples in the EXHIBITS.

4. A prototype of the displays shall be developed in close coordination with Sound Transit's operations and engineering staff. This coordination will require reiterative modifications to the display. The Contractor shall assume this iterative process. The final version of the prototype shall be submitted to Sound Transit for approval. Operator access to the BMS, for the purpose of system manipulation, shall not be designed or implemented to occur from any device other than the dedicated HMI's.

5. The HMI's shall be connected to the BMS system via a Contractor provided IP local area network (LAN). This HMI will serve as the operator interface for the Contractor provided equipment and for the Systems contractor provided equipment. The I/O for this equipment shall be as indicated in the BMS subset contract drawings.

C. Provide Remote I/O (RIO) compatible with the BMS control processing equipment.

D. Provide fiber optic and copper cable communication equipment and transmission media, as well as required communication programming to transmit, at each location shown on the

Contract Drawings. See communications horizontal cabling as stated in the Contract Documents for BMS cable and conductor requirements.

E. Provide control equipment and associated software programming at each location shown on the Contract Drawings:

1. Coordinate software programming with existing sites.

2. Coordinate software programming with Security Operations Center (SOC):

a. Alarm and Event information.

3. Provide Historical Collection of point data.

a. Record 2 years of data.

b. Coordinate method for data storage with Sound Transit IT.

F. Provide non-proprietary, open standard, communications network for the use of the BMS system as indicated.

G. The BMS system shall provide overall system response time meeting the following requirements:

1. Binary point change of value connected to DDC system should be updated and displayed at least every 10 seconds for use by operator.

2. Analog point change of value connected to DDC system should be updated and displayed at least every 10 seconsds for use by operator.

3. Digital output commands entered at the HMI shall start execution in the field within a maximum of 2 seconds following command execution at the HMI.

H. Include installation and calibration, supervision, adjustments, and fine-tuning necessary for complete and fully operational system.

I. The complete system shall be designed for operation under the following environmental conditions. Where the installed location cannot provide the environment required, Contractor shall provide appropriate heat sinks and air tight enclosure to protect the system:

1. Ambient temperature: 0 degrees to 60 degrees Celsius.

2. Relative humidity: 5 percent to 95 percent.

3. Equipment not installed in the garage communications room shall be able to withstand the environmental extremes from operating in these spaces. All such equipment in these enclosures shall have an operating temperature between -10 degrees to 140 degrees Fahrenheit.

J. The Contractor shall have the following additional responsibilities under the scope of this contract:

1. Provide submittal and/or record documentation.

2. The Contractor shall be directly responsible for the coordination and integration of the BMS with motor controls, packaged equipment controls, instrumentation, and other related equipment. The Contractor shall be responsible to obtain submittal information on the equipment specified or provided by other suppliers or disciplines. The Contractor shall communicate directly with the manufacturers and suppliers of

all related equipment to determine all details of the equipment that may influence or affect the control system. The Contractor shall determine all requirements for and shall integrate all the equipment of the BMS into a unified and operational system as outlined in the Contract Documents.

3. Provide specified Sound Transit personnel training.

4. Participate in specified commissioning process of related equipment:

   a. FACP (Fire Alarm Control Panel).

   b. HVAC (Heating Ventilation Air Conditioning).

   c. Electrical System.

5. Perform all system start-up and commissioning procedures as required and described by this Section.

6. Respond to project punch list and correct any system deficiencies.

2.02 MANUFACTURERS

A. Manufacturers:

1. Server-based software supervisory control:

   a. Hardware:

      1) If using software-based supervisory control, gather server hardware requirements through the request for information process.

   b. Software:

      1) FX Server 14, FX Workbench.

      2) Tridium Vykon SoftJACE.

      3) Approved equal.

2. Supervisory controllers:

   a. Johnson Controls (JCI):

      1) FX80 JACE controller.

   b. Compatibility with BACnet MS/TP, BACnet IP, LonWorks and Modbus TCP/IP protocols.

   c. Provide accessories as required to support network communication between devices.

   d. Provide all licenses and drivers required to implement a remote, web-based interface.

   e. Approved equal.

3. Equipment controllers:

   a. JCI:

1) CG and CV series devices.

2) FAC and FEC series devices.

b. Must be compatible and integrated with provided supervisory controller(s).

c. Approved equal.

4. Remote I/O:

a. JCI:

1) M4-XPM series devices.

2) MS-IOM series devices.

b. Must be compatible and integrated with provided equipment controller(s).

c. Approved equal.

5. Communications Protocol Gateways:

a. Contemporary Controls BASrouter.

b. KMC Controls BACnet Router.

c. ProSoft / Sierra Monitor / MSA QuickServer.

d. Red Lion Data Station Plus model DSP.

e. Approved equal.

6. Approved Equal Fiber Optic Communications Equipment:

a. Phoenix Digital.

b. Approved Equal.

7. Ethernet Switching Equipment:

a. Switches are provided and configured by Sound Transit.

b. Provide mounting space, hardware, power supply, and communications cable connections for all switches installed in BMS control panels, racks, and cabinets. Ensure physical, electrical, and connection details are coordinated within Sound Transit using the Ethernet switch list submittal.

8. HMI Application Software:

a. Niagara 4.

b. Approved Equal.

9. Enclosure and Panels Seismic rated:

a. Chatsworth.

b. Hoffman/Pentair.

c. Saginaw Control & Engineering.

d. Approved equal.

10. Conduit Raceway:

a. Carlon.

b. Approved equal.

11. Fiber Distribution Panel:

a. Corning LANscape.

b. Telect LCX.

c. Approved equal.

12. Ethernet Patch Panel:

a. Leviton.

b. Approved equal.

2.03 SYSTEM CONTROL EQUIPMENT DESCRIPTION

A. Provide power from the communications room ac system to power all BMS electronic equipment, i.e. – Controllers, RIO, IP switch, power supplies, etc. prior to the Systems Contractor installing the UPS:

1. The systems contractor will provide a UPS in the communication room as part of a follow on contract.

2. Provide a temporary bypass of the Systems provided UPS to power the BMS for testing.

3. The temporary bypass shall be installed in such a way that facilitates easy removal by the Systems contractor to install the UPS bypass and the UPS system.

4. A submittal shall be provided showing this temporary power layout. This submittal shall include BMS power loads for UPS sizing.

B. BMS equipment environmental operating parameters:

1. Temperature:

a. Equipment not in a communication room: minus 10 to 140 degrees Fahrenheit ambient.

b. Equipment in communications room; 50 degrees Fahrenheit to 95 degrees Fahrenheit.

2. Relative humidity: 5 to 95 percent relative humidity.

3. Atmospheric pressure: 795 to 1080 kPa.

C. HMI:

1. Gather software/hardware requirements for local HMI through the request for information process.

2. Specified to operate in the environment where it will reside.

D. Control Units:

1. See hardware specifications for equipment controllers.

2. Modular, comprising a microprocessor-based central processor unit module with programmable, nonvolatile, random-access memory; power supply modules; input/output communications network processing modules, and system communications modules.

3. Units monitor or control each input/output point; process information; execute commands from operator terminals or SOC operators; and download data from or upload data to HMI units.

4. Control Units shall be equipped with web server capability to provide control and status information to web-browser-based applications.

5. Control functions operate, regardless of system communications network status, over star connected fiber optic I/O network communication links. Functions include the following:

a. Discrete/digital and analog.

b. Monitoring, controlling, or addressing data points.

6. Each BMS control enclosure and control panel shall be provided with an Ethernet-based data communication port for operator I/O devices such as industry standard portable operator's terminals or portable lap-top computers.

7. Each BMS control panel shall continuously perform self-diagnostics, communication diagnosis and diagnosis of all subsidiary equipment. Information concerning detected diagnostic faults shall be broadcast network-wide via the I/O network.

8. All necessary software to form a complete operating system as described in this specification shall be provided. Applicable software programs shall be provided as an integral part of each BMS panel and shall not be dependent upon any higher-level computer for execution.

9. Sensor and Control Wiring Surge Protection: Controllers shall have sensor and control wiring surge protection with optical isolation, metal oxide varistors (MOV), or silicon avalanche devices. Fuses are not permitted for surge protection.

E. BMS System Communications Network (LAN):

1. Ethernet/IP communications protocols that support communications at 1000Base-LX.

2. Provide at each BMS cabinet.

3. Enough ports for BMS plus Systems provided equipment that requires Ethernet connectivity plus 25 percent spare ports.

4. Communication via single mode fiber optic cables.

5. IP Addressing:

a. Any IP addressing that is required for equipment being installed under the contract that is not addressed by the specification will require an RFI and

subsequent approval by Sound Transit before being used. Submit RFI three months in advance of implementation.

6. The network shall be time synched to Sound Transit's TCN domain.

F. Software:

1. With approval from Sound Transit, update to latest versions of software at project completion. Include and implement the following capabilities:

a. Software shall be developed to provide the control units with the functionality specified herein and on the Plans.

1) Control logic for HVAC as described in the mechanical subset.

2) Manual (operator initiated) selection and control of individual electrical, systems, HVAC, plumbing, and mechanical system components.

3) Monitoring and controlling of indicated field equipment and devices.

2. Software shall be developed to provide the HMI unit with the functionality specified herein and on the Plans:

a. Input/output Capability:

1) Request display of current values or status in tabular or graphic format.

2) Command selected equipment to specified state.

3) Initiate logs and reports.

4) Change analog limits.

5) Add, delete, or change points within each control unit or application routine.

6) Change point input/output descriptors, status, alarm descriptors, and engineering unit descriptors.

7) Add new control units to system.

8) Modify and set up maintenance scheduling parameters.

9) Develop color graphic displays based on MIL-STD 1472G.

10) Automatically archive select data even when running third party software.

11) Provide capability to sort and extract data from archived files and to generate custom reports.

12) Support alarm/data printer operations.

13) Operator selectable output of screen graphical images, data trend logs, and/or alarm summary information to printer.

14) Automatic time and date stamped output of all system alarms and automatic or manual control system actions to printer.

15) Select daily, weekly or monthly as scheduled frequency to synchronize time and date. Accommodate daylight savings time adjustments.

b. Dynamic Color Graphic Displays:

1) Utilize symbols based on MIL-STD 1472G.

2) The system shall provide dynamic graphic data.

a) Limit output of real-time live dynamic data per graphic screen to 60 objects.

3) Up to 1,000 separate graphic pages.

c. Graphic screens to be developed in conjunction with Sound Transit staff include but are not limited to:

1) Graphic screens will match existing facilities and adhere to BMS graphic standards. Refer to EXHIBITS for standards utilizing available symbols, and libraries.

2) Overviews of each electrical, plumbing, or mechanical system, providing means to quickly select specific graphics and indicating system-wide operating parameters and alarms.

3) Graphical representation of ventilation equipment configuration at each specific garage location, indicating status of each ventilation system component.

4) For each system, provide screens showing user- configurable historical data trend logging of equipment status and monitored signal values.

5) System-wide alarm summary screen indicating date, time, and nature of alarm event and providing the means to quickly select the graphical representation screen pertaining to the affected equipment or system.

6) Communications network overview screens indicating status and diagnostic information generated by the system communications and I/O communications network sub-systems.

d. Operator System Access: Via software password with minimum 10 access levels at HMI.

e. Data Base Creation and Support: Changes shall utilize standard procedures. Control unit shall automatically check workstation data base files upon connection and verify data base match. The listing shown in the drawings should be assumed to be 95 percent complete with additions or modifications to the final I/O list coordinated with the installation contractor, procured equipment, and Sound Transit. Sound Transit, at its sole discretion, may add or delete points. The Contractor shall coordinate with Sound Transit during its preliminary design to finalize the points list. The Contractor shall assume

this coordination, providing additional I/O modules if required, and providing Controller or Remote I/O configuration of the revised points.

f. Minimum capability shall include:

1) Add and delete points.

2) Modify any point parameter.

3) Change, add, or delete English language descriptors.

4) Add, modify, or delete alarm limits.

5) Add, modify, or delete points in start/stop programs, trend logs, etc.

6) Create custom relationship between points.

7) Create or modify BMS loops and parameters.

8) Create or modify override parameters.

9) Add, modify, and delete any applications program.

10) Add, delete, develop, or modify dynamic color graphic displays.

g. Alarm Processing:

1) Abnormal condition: Cause alarm and appropriate message, including time, system, point descriptor, and alarm condition.

2) Critical alarm or change-of-state: Display message, stored on disk for review and sort, or print.

3) Display alarm reports on video. Display multiple alarms in order of occurrence.

4) Define time delay for equipment start-up or shutdown.

5) Allow unique routing of specific alarms.

6) Operator selectable configuration specifies if alarm requires acknowledgment.

2.04 CONTROL PANELS

A. Continue to indicate unacknowledged alarms after return to normal.

B. Alarm notification:

C. Display indicating alarm condition.

D. Selectable audible alarm indication.

E. All BMS system alarms shall be available from web-based graphics. Contractor shall coordinate closely with Sound Transit during BMS programming to provide this functionality:

1. Communication Room Equipment Rack:

a. Racks shall be Chatsworth Products (CPI) Seismic Frame cabinet series, or approved equal.

b. Rack shall be rated Zone 3 compliant to Bellcore GR-63-CORE for Network Equipment Building Systems (NEBS).

c. Frame: Welded steel.

d. Rack Framework: 11 gauge ASTM A570 steel.

e. Size: Sized for standard 19-inch equipment widths. 84 inch H (43 rack units), 36 inch usable depth, 27.32 inch width.

f. Paint: ANSI 61 gray and resistant to corrosion.

g. Mounting Rails: Standard EIA-310 hole pattern with pre-tapped holes.

h. Ventilation: Louvered top panel and fan to provide air flow of 400 CFM minimum.

i. Paneling: Enclosed with side panels.

j. Doors: Hinged, swing open, and removable doors.

k. Design racks to accept 120 Vac single phase service.

l. Mounting Equipment:

1) Expansion Anchors: Hilti Model HSLB M12-25 or approved equal.

2) Cabinet isolation barrier, non-conductive phenolic resin.

2. BMS Cabinet:

a. Single door, enclosure rated NEMA Type 4X for locations not in a room or closet. Provide NEMA 12 for all other locations.

b. Enclosures shall, as a minimum, be constructed of 16 gauge steel with all seams continuously welded and smoothly finished, and shall possess integral, rolled lip framing around the door to prevent dirt, water, and other debris from falling into the cabinet when the door is opened.

c. Enclosure door shall be fully gasketed with glued-in-place oil resistant gaskets and shall be equipped with a screwed-down door clamp mechanism and pad lockable hasp assembly.

d. Exterior finish shall be cabinet manufacture's standard corrosion inhibiting, baked-on enamel finish over phosphatized surfaces.

e. The enclosure interior surfaces and back panels shall be finished with the cabinet manufacturer's standard corrosion-inhibiting, white high-gloss baked-on enamel finish.

F. Interface Terminal Cabinets (ITCs):

1. Provide wall-mounted, single door, enclosures rated NEMA Type 4X where not in a room or closet and NEMA 12 for all other locations.

2. Enclosures shall, as a minimum, be constructed of 16 gauge steel with all seams continuously welded and smoothly finished, and shall possess integral, rolled lip framing around the door to prevent dirt, water, and other debris from falling into the cabinet when the door is opened.

3. Enclosure door shall be fully gasketed with glued-in-place oil resistant gaskets and shall be equipped with a screwed-down door clamp mechanism and pad lockable hasp assembly.

4. Exterior finish shall be cabinet manufacturer's standard corrosion inhibiting, baked-on enamel finish over phosphatized surfaces.

5. The enclosure interior surfaces and back panels shall be finished with the cabinet manufacturer's standard corrosion-inhibiting, white high-gloss baked-on enamel finish.

2.05 CONTROL PANEL INTERNAL COMPONENTS

A. Fiber Optic Patch Panels: Provide surface mount telecommunications outlet housings of a high-density, low-profile, design with four field-configurable ports, snap-lock cover, and cable knockouts on back. Base shall include tie-wrap anchor points at all cable entrances. Housings shall be mountable with screws and have mounting holes that are compatible with standard NEMA wall boxes. Constructed of high-impact self- extinguishing plastic. UL listed.

B. CAT6 Patch Panels: Provide 24-port minimum capacity surface or rack-mount telecommunications outlet housings of a high-density, low-profile, design. Rack-mount housings shall be mountable with screws and have mounting holes that are compatible with standard 19-inch racks. Constructed of 16 gauge steel. UL listed.

C. Managed Ethernet Switches: Managed Gigabit Ethernet switches have capabilities for both Fiber Optic Cable Type ST Connections and RJ-45 10/100/1000 copper cabling. Provide output contact closure signals to indicate supply power OK and switch failure. Switches will be configured by Sound Transit with SNMP community string and IP address. Switches shall be uplinkable to Sound Transit-provided TCN switches utilizing CAT6 RJ-45 media:

1. Switches shall have a port count to accommodate Contractor provided equipment that requires Ethernet connectivity plus have 25 percent spare ports at each Ethernet switch location.

D. Terminal Blocks: Provide channel mounted, impact and combustion resistant, self-extinguishing type terminal blocks. Terminal blocks shall be rated for its use. Furnish all required end plates, channel clamps, separators and other components required for installation in accordance with the manufacturer's recommendations. Terminal blocks shall each be equipped with an appropriate label which is large enough to legibly accommodate identifying.

E. Channel Mounted Circuit Breakers: Provide units equipped with "tripped" indication rated to protect the equipment. Channel mounted breakers shall mount on the same size and type of mounting channel as the terminal blocks specified herein and shall possess terminals each capable of accommodating one #14 AWG wire of the type specified herein. Each breaker shall be equipped with an appropriate label and labeling space large enough to legibly accommodate a three-digit identifying number. Provide thermal- magnetic type circuit breakers with a "normal blow" tripping characteristic curve. Provide selective coordination of all upstream and downstream circuit protection devices.

F. Wire way: Provide slotted type plastic wire ways, with covers, of the size for neat installation of interconnecting conductors. Wire ways shall be restricted slot type to prevent accidental removal of wires and shall be constructed of rigid, non-flammable polyvinyl chloride (PVC). Wire way shall be UL recognized for continuous operation at 140 degrees Fahrenheit.

G. 24VDC Power Supplies: Provide regulated 24 volt DC power supplies. Power Supplies will be rated for temperature range minus 20 degrees Celsius to 60 degrees Celsius. Power supplies shall be sized to provide output power of additional 33 percent of initial design load.

H. Surge Protection on incoming power for equipment protection. Provide SPD devices that meet UL 1449 and UL 1283 specifications.

I. Each BMS control enclosure and control panel shall be provided with a 120VAC GFCI convenience receptacle for use by portable lap-top computers

J. Shall Meet NEC Requirements for listing short circuit rating 409.22 and 409.110.

K. Shall Meet NEC Requirements for Wiring Space and Wire Bending Space 409.104

L. Shall be UL 60947-4-1 compliant.

PART 3 - EXECUTION

3.01 SEQUENCE OF OPERATION

A. The BMS System shall be programmed to operate all equipment and interfaces as specified herein.

B. The HMI shall dynamically display current status or position of each item of equipment.

C. Normal Operation:

1. The HMI indicates ‘Normal’ system status.

2. Ventilation, HVAC, vertical circulation, communications system, and plumbing systems operate according to their normal sequence of operations.

D. Abnormal Operation:

1. Each item of equipment shall be monitored via device feedback to ensure correct operation. Failure of equipment to respond correctly within the timeout period limits shall result in the following actions:

a. An alarm message shall be displayed on the HMI. The message shall indicate the specific equipment, device and nature of the alarm.

3.02 EXAMINATION

A. Verify that conditioned power supply is available to control units, HMI and server. Verify that field end devices and wiring are correctly and securely installed before proceeding with installation.

3.03 INSTALLATION

A. Install equipment as indicated to comply with manufacturer's written instructions.

B. Install software in control units and HMI. Implement all features of programs to specified requirements and appropriate to sequence of operation.

C. Connect and configure equipment and software to achieve the sequence of operation specified.

D. Verify location of exposed control sensors with plans and structural details before installation. Control sensor to be mounted a minimum of 60 inches above finished floor.

E. Install labels and nameplates to identify control.

3.04 ELECTRICAL WIRING AND CONNECTIONS

A. Install all cables and conductors in raceway.

B. Conceal raceway, except in mechanical rooms and areas where other conduit and piping are exposed.

C. Bundle and harness multi-conductor instrument cable in place of single cables where several cables follow a common path.

D. Fasten flexible conductors, bridging cabinets and doors, neatly along hinge side; protect against abrasion. Tie and support conductors neatly.

E. Label all control conductors, utilizing identifying labels shown on the Construction Drawings, for future identification and servicing of control system.

F. Connect electrical components to wiring systems and to ground as indicated and instructed by manufacturer. Tighten connectors and terminals, including screws and bolts, according to equipment manufacturer's published torque-tightening values for equipment connectors. Where manufacturer's torqueing requirements are not indicated,

G. tighten connectors and terminals according to tightening requirements specified in UL 486A-86B.

H. Megger and continuity test all cable conductors after termination, but prior to landing.

3.05 FIELD QUALITY CONTROL

A. BMS Signal Integrity: Perform field quality checks as part of the Pre-Commissioning Checklist to verify interconnections between the BMS system and the field instruments and devices. All signal interconnections shall be individually physically verified for proper terminations and noted on the Pre-Commissioning Checklist. Completed checklist shall be submitted as part of the final test report.

B. ITCs: Perform field quality checks as part of the Pre-Commissioning Checklist to verify correct interconnections between the ITC terminals and the field equipment, instruments and devices. All signal interconnections shall be individually physically verified for proper terminations and noted on the Pre-Commissioning Checklist. Completed checklist shall be submitted as part of the final test report.

C. For any reason NRTL certifications or listings for BMS enclosures are voided throughout construction, provide field re-certification.

3.06 COMMISSIONING

A. Refer to Section 25 08 50 - Commissioning of Facility Controls.

B. Replace, at no cost to Sound Transit, all controls and equipment found to be damaged, malfunctioning, or that does not meet acceptable system performance standards. Submit a corrective action plan for all noted deficiencies identified during the commissioning process.

3.07 TRAINING

A. Provide training for a minimum of eight Sound Transit Employees on-site or at a Sound Transit office location as follows:

1. Training in the receipt, handling, and acknowledgment of alarms.

2. Training in BMS operation including logging-in, reviewing alarm and status displays, navigating HMI graphical screens, and the initiation of both automatic and manual control output actions from the BMS HMI's.

3. Training in BMS functional operation and monitoring of each BMS subsystem within the garage. Training to include complete overview of system operation and available operating modes and parameters.

4. Training on trending, archiving, and report generation using data points available within the BMS.

5. Maintenance training covering each aspect of both the hardware and software elements of the BMS including preventative maintenance, emergency repair, and control unit and HMI programming development and modification.

6. How to configure and deploy each type of spare component

7. Provide video recording of the training and allow duplication and distribution within Sound Transit.

3.08 SPARE PARTS

A. All spare parts shall conform to the requirements of PART 2 - PRODUCTS, of this Section.

B. Provide the below indicated quantity and type of new spares, in original unopened packaging, to enable the replacement of the following components in the event of a failure:

1. Six of each type of fuse used within the BMS system.

2. Two of each type and rating of relays and contactors used.

3. Three of each type of relay/contactor/module socket base used.

4. Two of each type and rating of channel mounted circuit breakers used.

5. One of each type of controller, remote I/O, communications graphics card, DI module, DO module, analog module, and power supply module used. Update software with the same version as the operational system 30 days prior to system acceptance.

3.09 DISPLAY GUIDELINES

A. Display development and configuration shall be based on Sound Transit garage display standards.

1. Provide an overview screen of the facility.

2. Provide a detailed screen of the equipment systems.

3. Provide a hierarchal means of navigation between overview and detail screens

a. Provide Graphics showing the operational status of the following:

1) Fans.

2) Dampers.

3) Ductwork sensors.

4) ACU.

5) AHU.

6) Heating Devices.

4. Graphics shall utilize device and tag numbering based upon contract documents.

5. Provide a means of trending multiple data points on a variable time scale.

6. Time scale shall trend from seconds to days.

B. Alarm message configuration shall be developed based on Sound Transit garage alarm standards:

1. Provide an alarm summary.
2. Provide a means of acknowledging alarms.
3. Provide a means of archiving alarm messages.

END OF SECTION

EXHIBITS (On Proceeding Pages)

1. EXHIBIT A: HMI Display Guidelines

EXHIBIT A: HMI DISPLAY GUIDELINES

SECTION 25 50 00

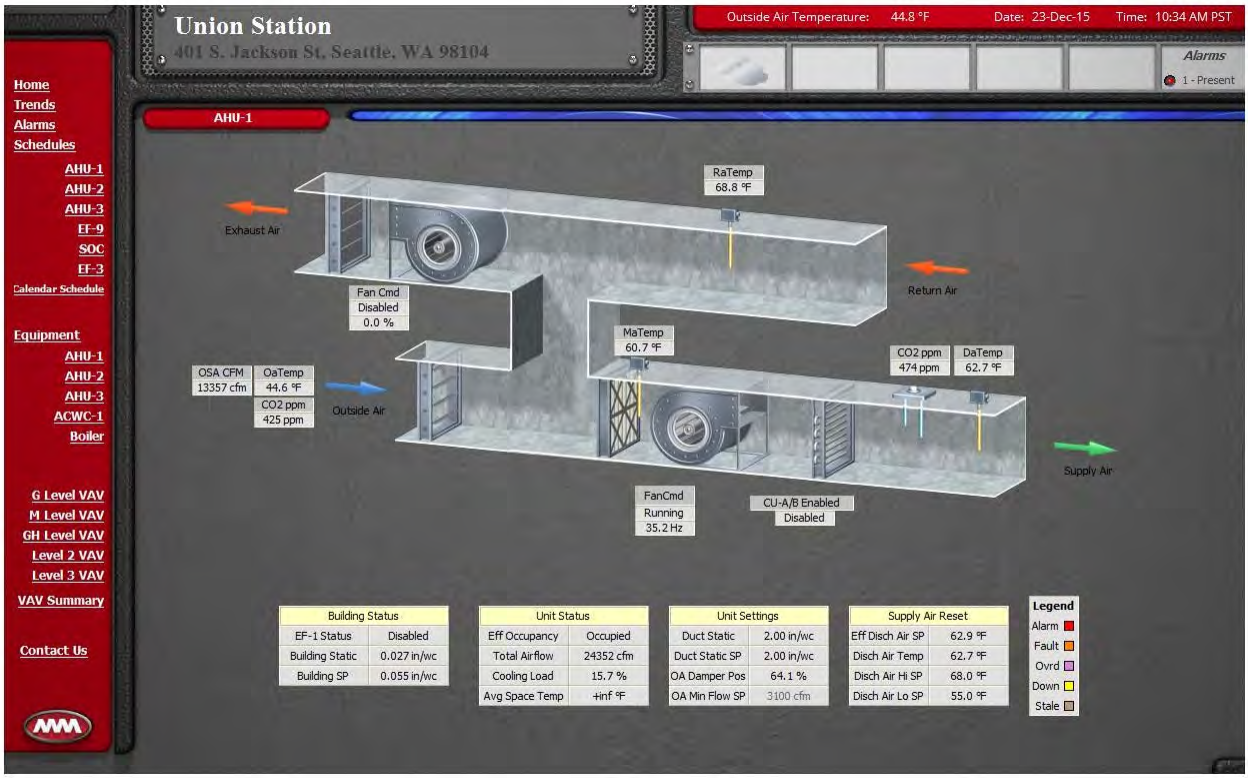

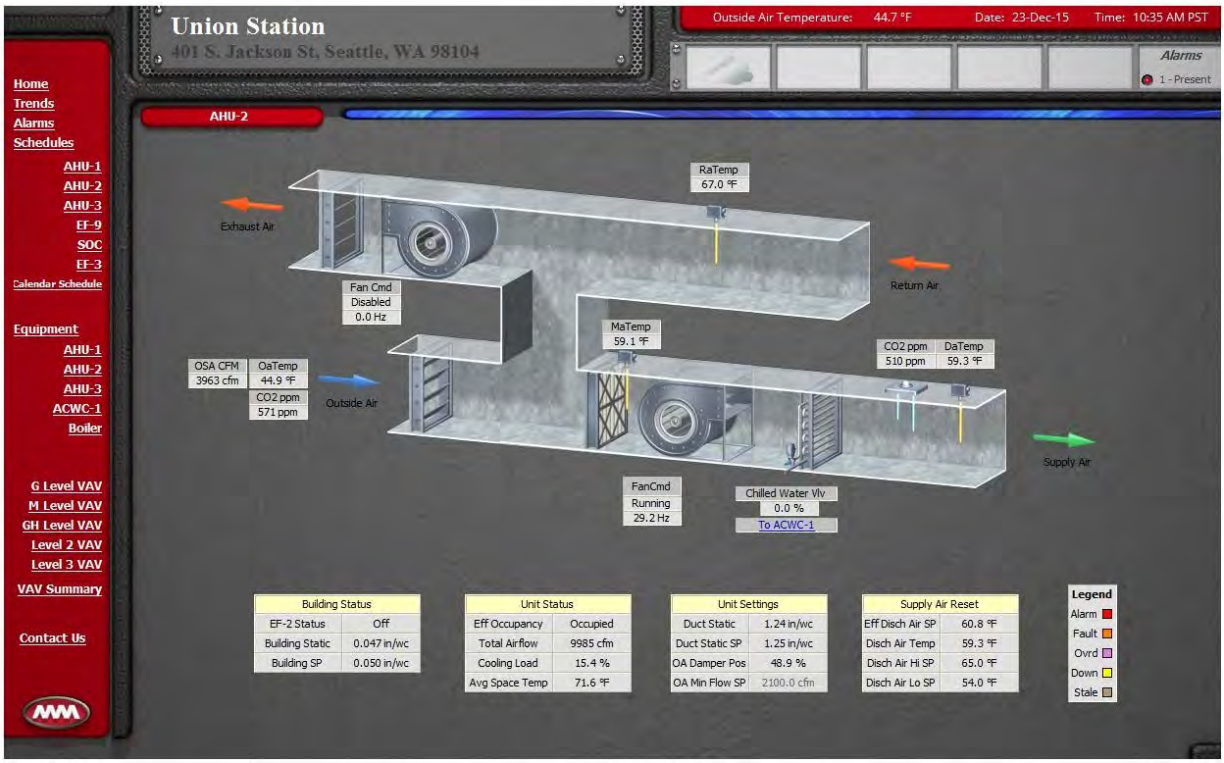

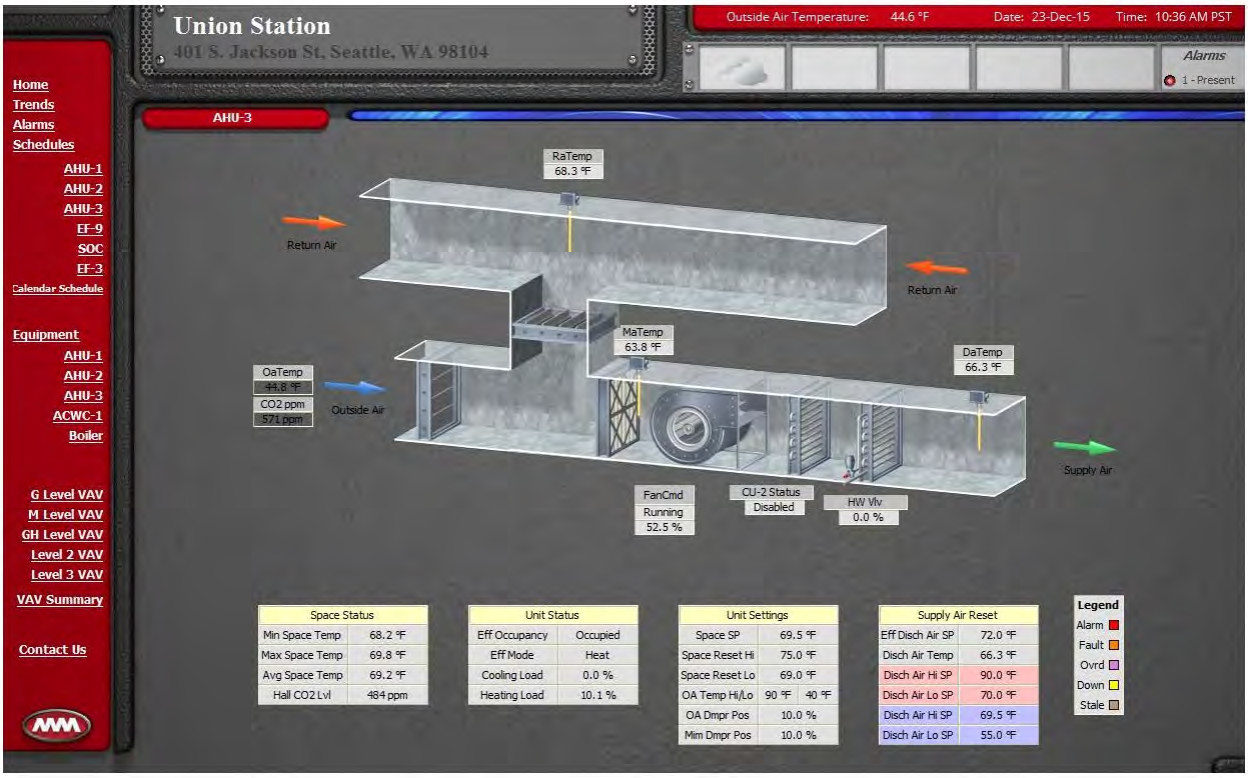
Union Station
401 S. Jackson St, Seattle, WA 98104
Outside Air Temperature: 44.6 °F
Date: 23-Dec-15
Time: 10:36 AM PST
Alarms
1 - Present
Home
Trends
Alarms
Schedules
AHU-1
AHU-2
AHU-3
EF-9
SOC
EF-3
Calendar Schedule
Equipment
AHU-1
AHU-2
AHU-3
ACWC-1
Boiler
G Level VAV
M Level VAV
GH Level VAV
Level 2 VAV
Level 3 VAV
VAV Summary
Contact Us
AHU-3
RaTemp
68.3 °F
Return Air
Return Air
MaTemp
63.8 °F
DaTemp
66.3 °F
OaTemp
44.8 °F
CO2 ppm
571 ppm
Outside Air
Supply Air
FanCmd
Running
52.5 %
CU-2 Status
Disabled
HW Vlv
0.0 %
Space Status
Min Space Temp 68.2 °F
Max Space Temp 69.8 °F
Avg Space Temp 69.2 °F
Hall CO2 Lvl 484 ppm
Unit Status
Eff Occupancy Occupied
Eff Mode Heat
Cooling Load 0.0 %
Heating Load 10.1 %
Unit Settings
Space SP 69.5 °F
Space Reset Hi 75.0 °F
Space Reset Lo 69.0 °F
OA Temp Hi/Lo 90 °F 40 °F
OA Dmpr Pos 10.0 %
Mim Dmpr Pos 10.0 %
Supply Air Reset
Eff Disch Air SP 72.0 °F
Disch Air Temp 66.3 °F
Disch Air Hi SP 90.0 °F
Disch Air Lo SP 70.0 °F
Disch Air Hi SP 69.5 °F
Disch Air Lo SP 55.0 °F
Legend
Alarm
Fault
Ovrd
Down
Stale

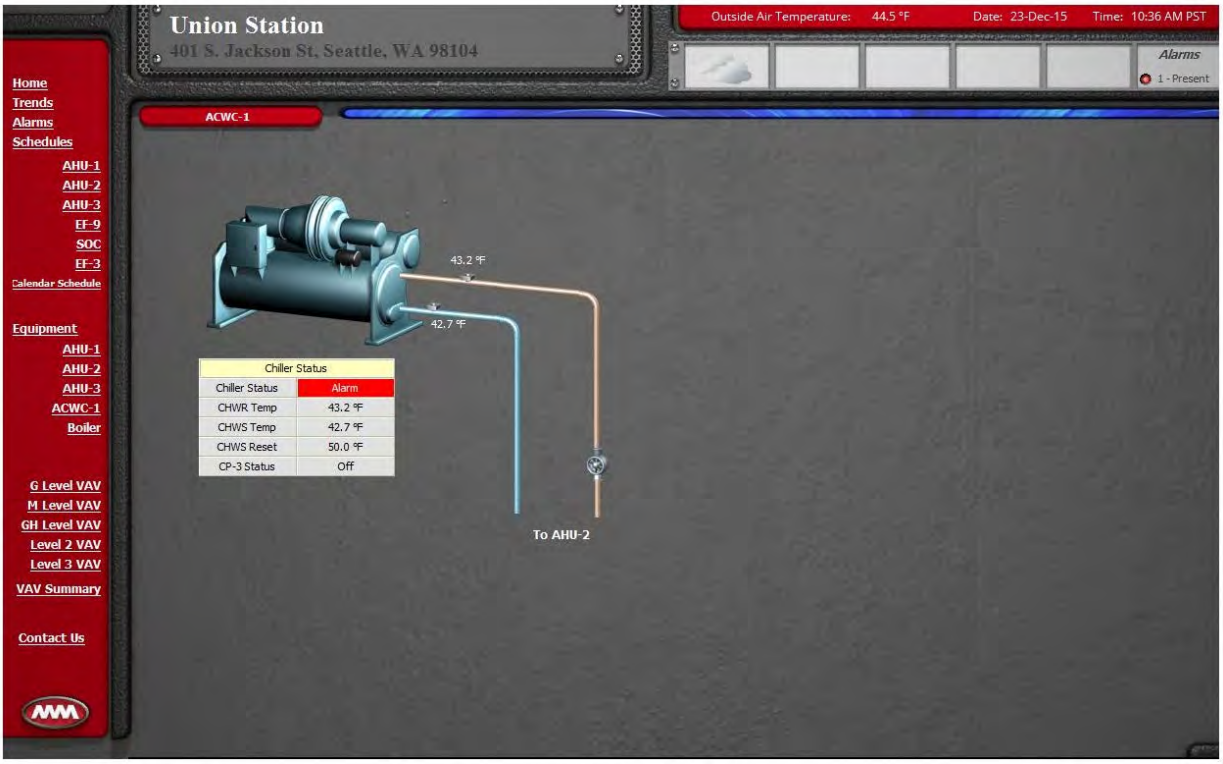
Union Station
401 S. Jackson St, Seattle, WA 98104
Outside Air Temperature: 44.5 °F
Date: 23-Dec-15
Time: 10:36 AM PST
Alarms
1 - Present
Home
Trends
Alarms
Schedules
AHU-1
AHU-2
AHU-3
EF-9
SOC
EF-3
Calendar Schedule
Equipment
AHU-1
AHU-2
AHU-3
ACWC-1
Boiler
G Level VAV
M Level VAV
GH Level VAV
Level 2 VAV
Level 3 VAV
VAV Summary
Contact Us
ACWC-1
43.2 °F
42.7 °F
Chiller Status
Chiller Status Alarm
CHWR Temp 43.2 °F
CHWS Temp 42.7 °F
CHWS Reset 50.0 °F
CP-3 Status Off
To AHU-2

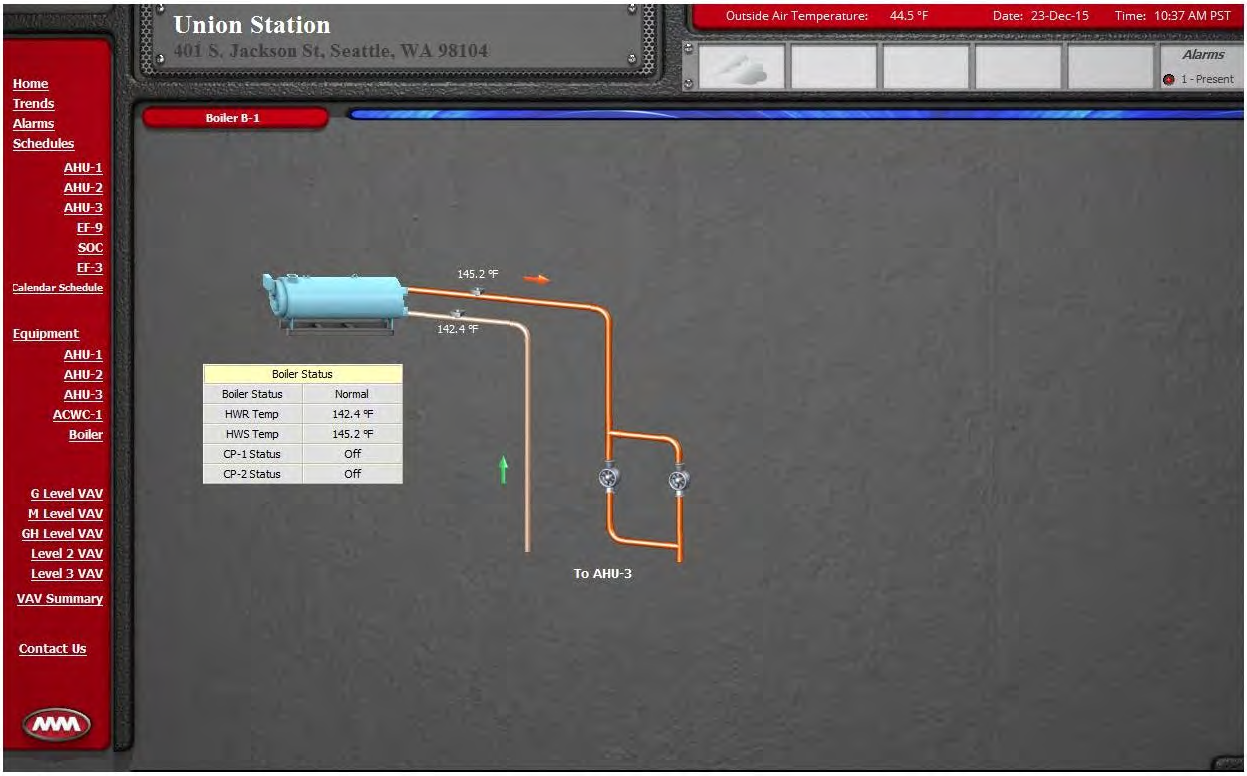
Union Station
401 S. Jackson St, Seattle, WA 98104
Outside Air Temperature: 44.5 °F
Date: 23-Dec-15
Time: 10:37 AM PST
Alarms
1 - Present
Home
Trends
Alarms
Schedules
AHU-1
AHU-2
AHU-3
EF-9
SOC
EF-3
Calendar Schedule
Equipment
AHU-1
AHU-2
AHU-3
ACWC-1
Boiler
G Level VAV
M Level VAV
GH Level VAV
Level 2 VAV
Level 3 VAV
VAV Summary
Contact Us
Boiler B-1
145.2 °F
142.4 °F
Boiler Status
Boiler Status | Normal
HWR Temp | 142.4 °F
HWS Temp | 145.2 °F
CP-1 Status | Off
CP-2 Status | Off
To AHU-3

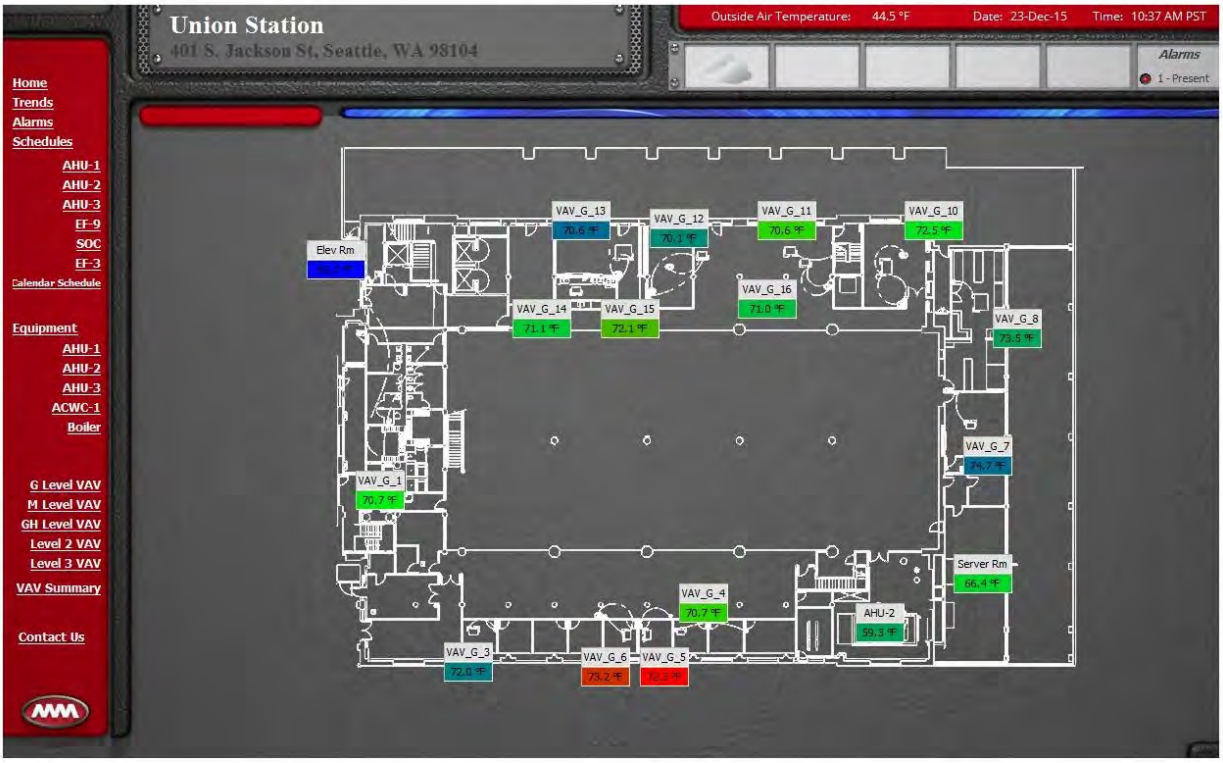
Union Station
401 S. Jackson St, Seattle, WA 98104
Outside Air Temperature: 44.5 °F
Date: 23-Dec-15
Time: 10:37 AM PST
Alarms
1 - Present
Home
Trends
Alarms
Schedules
AHU-1
AHU-2
AHU-3
EF-9
SOC
EF-3
Calendar Schedule
Equipment
AHU-1
AHU-2
AHU-3
ACWC-1
Boiler
G Level VAV
M Level VAV
GH Level VAV
Level 2 VAV
Level 3 VAV
VAV Summary
Contact Us
Elev Rm
VAV_G_13
70.6 °F
VAV_G_12
70.1 °F
VAV_G_11
70.6 °F
VAV_G_10
72.5 °F
VAV_G_16
71.0 °F
VAV_G_14
71.1 °F
VAV_G_15
72.1 °F
VAV_G_8
73.5 °F
VAV_G_7
74.7 °F
VAV_G_1
70.7 °F
Server Rm
66.4 °F
VAV_G_4
70.7 °F
AHU-2
59.3 °F
VAV_G_3
72.0 °F
VAV_G_6
73.2 °F
VAV_G_5
72.3 °F

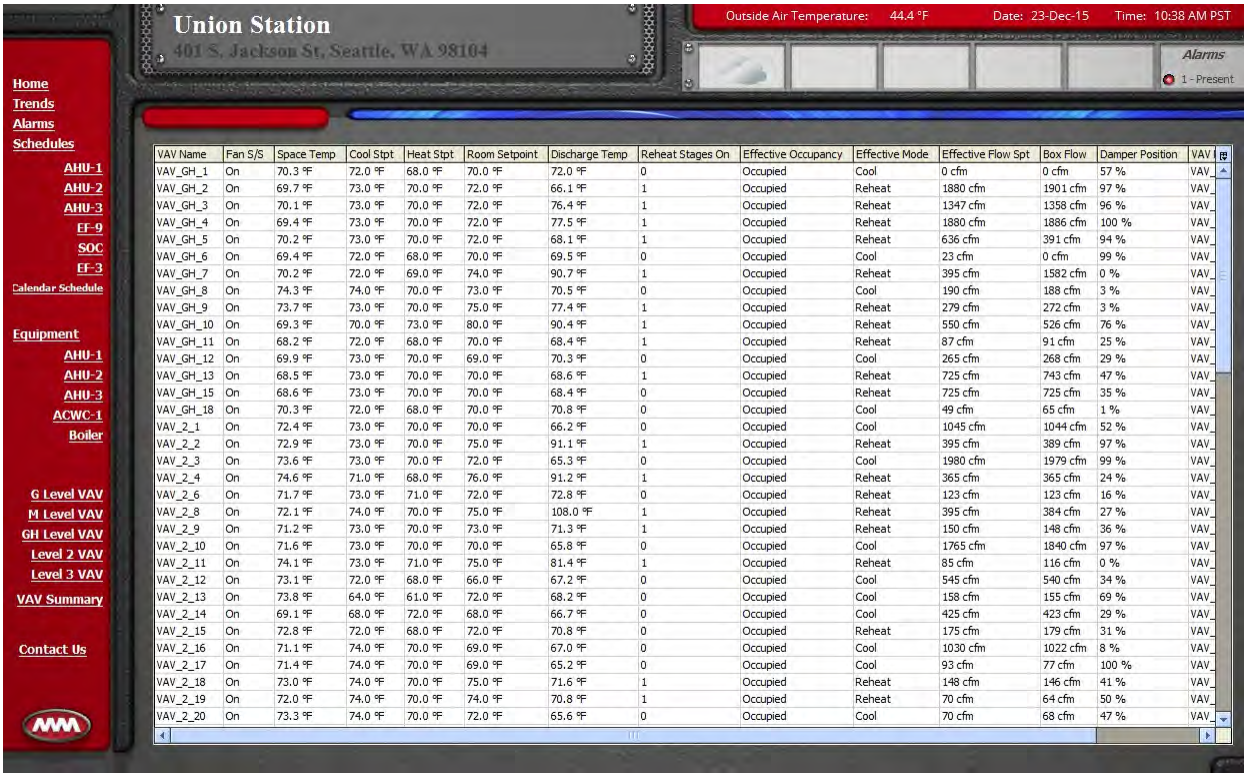

VAV Name	Fan S/S	Space Temp	Cool Stpt	Heat Stpt	Room Setpoint	Discharge Temp	Reheat Stages On	Effective Occupancy	Effective Mode	Effective Flow Spt	Box Flow	Damper Position	VAV
VAV_GH_1	On	70.3 °F	72.0 °F	68.0 °F	70.0 °F	72.0 °F	0	Occupied	Cool	0 cfm	0 cfm	57 %	VAV_
VAV_GH_2	On	69.7 °F	73.0 °F	70.0 °F	72.0 °F	66.1 °F	1	Occupied	Reheat	1880 cfm	1901 cfm	97 %	VAV_
VAV_GH_3	On	70.1 °F	73.0 °F	70.0 °F	72.0 °F	76.4 °F	1	Occupied	Reheat	1347 cfm	1358 cfm	96 %	VAV_
VAV_GH_4	On	69.4 °F	73.0 °F	70.0 °F	72.0 °F	77.5 °F	1	Occupied	Reheat	1880 cfm	1886 cfm	100 %	VAV_
VAV_GH_5	On	70.2 °F	73.0 °F	70.0 °F	72.0 °F	68.1 °F	1	Occupied	Reheat	636 cfm	391 cfm	94 %	VAV_
VAV_GH_6	On	69.4 °F	72.0 °F	68.0 °F	70.0 °F	69.5 °F	0	Occupied	Cool	23 cfm	0 cfm	99 %	VAV_
VAV_GH_7	On	70.2 °F	72.0 °F	69.0 °F	74.0 °F	90.7 °F	1	Occupied	Reheat	395 cfm	1582 cfm	0 %	VAV_
VAV_GH_8	On	74.3 °F	74.0 °F	70.0 °F	73.0 °F	70.5 °F	0	Occupied	Cool	190 cfm	188 cfm	3 %	VAV_
VAV_GH_9	On	73.7 °F	73.0 °F	70.0 °F	75.0 °F	77.4 °F	1	Occupied	Reheat	279 cfm	272 cfm	3 %	VAV_
VAV_GH_10	On	69.3 °F	70.0 °F	73.0 °F	80.0 °F	90.4 °F	1	Occupied	Reheat	550 cfm	526 cfm	76 %	VAV_
VAV_GH_11	On	68.2 °F	72.0 °F	68.0 °F	70.0 °F	68.4 °F	1	Occupied	Reheat	87 cfm	91 cfm	25 %	VAV_
VAV_GH_12	On	69.9 °F	73.0 °F	70.0 °F	69.0 °F	70.3 °F	0	Occupied	Cool	265 cfm	268 cfm	29 %	VAV_
VAV_GH_13	On	68.5 °F	73.0 °F	70.0 °F	70.0 °F	68.6 °F	1	Occupied	Reheat	725 cfm	743 cfm	47 %	VAV_
VAV_GH_15	On	68.6 °F	73.0 °F	70.0 °F	70.0 °F	68.4 °F	0	Occupied	Reheat	725 cfm	725 cfm	35 %	VAV_
VAV_GH_18	On	70.3 °F	72.0 °F	68.0 °F	70.0 °F	70.8 °F	0	Occupied	Cool	49 cfm	65 cfm	1 %	VAV_
VAV_2_1	On	72.4 °F	73.0 °F	70.0 °F	70.0 °F	66.2 °F	0	Occupied	Cool	1045 cfm	1044 cfm	52 %	VAV_
VAV_2_2	On	72.9 °F	73.0 °F	70.0 °F	75.0 °F	91.1 °F	1	Occupied	Reheat	395 cfm	389 cfm	97 %	VAV_
VAV_2_3	On	73.6 °F	73.0 °F	70.0 °F	72.0 °F	65.3 °F	0	Occupied	Cool	1980 cfm	1979 cfm	99 %	VAV_
VAV_2_4	On	74.6 °F	71.0 °F	68.0 °F	76.0 °F	91.2 °F	1	Occupied	Reheat	365 cfm	365 cfm	24 %	VAV_
VAV_2_6	On	71.7 °F	73.0 °F	71.0 °F	72.0 °F	72.8 °F	0	Occupied	Reheat	123 cfm	123 cfm	16 %	VAV_
VAV_2_8	On	72.1 °F	74.0 °F	70.0 °F	75.0 °F	108.0 °F	1	Occupied	Reheat	395 cfm	384 cfm	27 %	VAV_
VAV_2_9	On	71.2 °F	73.0 °F	70.0 °F	73.0 °F	71.3 °F	1	Occupied	Reheat	150 cfm	148 cfm	36 %	VAV_
VAV_2_10	On	71.6 °F	73.0 °F	70.0 °F	70.0 °F	65.8 °F	0	Occupied	Cool	1765 cfm	1840 cfm	97 %	VAV_
VAV_2_11	On	74.1 °F	73.0 °F	71.0 °F	75.0 °F	81.4 °F	1	Occupied	Reheat	85 cfm	116 cfm	0 %	VAV_
VAV_2_12	On	73.1 °F	72.0 °F	68.0 °F	66.0 °F	67.2 °F	0	Occupied	Cool	545 cfm	540 cfm	34 %	VAV_
VAV_2_13	On	73.8 °F	64.0 °F	61.0 °F	72.0 °F	68.2 °F	0	Occupied	Cool	158 cfm	155 cfm	69 %	VAV_
VAV_2_14	On	69.1 °F	68.0 °F	72.0 °F	68.0 °F	66.7 °F	0	Occupied	Cool	425 cfm	423 cfm	29 %	VAV_
VAV_2_15	On	72.8 °F	72.0 °F	68.0 °F	72.0 °F	70.8 °F	0	Occupied	Reheat	175 cfm	179 cfm	31 %	VAV_
VAV_2_16	On	71.1 °F	74.0 °F	70.0 °F	69.0 °F	67.0 °F	0	Occupied	Cool	1030 cfm	1022 cfm	8 %	VAV_
VAV_2_17	On	71.4 °F	74.0 °F	70.0 °F	69.0 °F	65.2 °F	0	Occupied	Cool	93 cfm	77 cfm	100 %	VAV_
VAV_2_18	On	73.0 °F	74.0 °F	70.0 °F	75.0 °F	71.6 °F	1	Occupied	Reheat	148 cfm	146 cfm	41 %	VAV_
VAV_2_19	On	72.0 °F	74.0 °F	70.0 °F	74.0 °F	70.8 °F	1	Occupied	Reheat	70 cfm	64 cfm	50 %	VAV_
VAV_2_20	On	73.3 °F	74.0 °F	70.0 °F	72.0 °F	65.6 °F	0	Occupied	Cool	70 cfm	68 cfm	47 %	VAV_

END OF EXHIBITS

SECTION 25 60 00

INTEGRATED AUTOMATION LINK STATION CONTROLS

PART 1 - GENERAL

1.01 SUMMARY

A. Section includes:

1. Requirements for the building management system (BMS) and emergency ventilation system (EVS), collectively called the field control system (FCS), equipment for the ventilation, vertical circulation, electrical, and mechanical system components, including control components for units that are not supplied with factory-wired controls. Items to be furnished include control equipment and software programming as well as communications and data transmission equipment and related software programming.

1.02 REFERENCES

A. This Section incorporates by reference the latest revisions of the following documents.

1. American National Standards Institute (ANSI):

a. ANSI T1.329 Network Equipment - Earthquake Resistance.

2. Institute of Electrical and Electronics Engineers (IEEE):

a. IEEE C37.90.1 Surge Withstand Capability (SWC) Tests for Relays and Relay Systems Associated with Electric Power Apparatus.

b. IEEE C62.41.1 Guide on the Surge Environment in Low-Voltage (1000 V and Less) AC Power Circuits.

3. National Electrical Manufacturers Association (NEMA):

a. NEMA IA 2.3 Programmable Controllers Part 3: Programming Languages.

b. NEMA ICS 1 Industrial Control and Systems General Requirements.

c. NEMA ICS 1.1 Safety Guidelines for the Application, Installation, and Maintenance of Solid State Control.

d. NEMA ICS 2 Controllers, Contactors and Overload Relays Rated 600 Volts.

e. NEMA ICS 4 Application Guide for Terminal Blocks.

f. NEMA ICS 6 Enclosures.

4. National Fire Protection Agency (NFPA):

a. NFPA 70 National Electrical Code.

b. NFPA 72 National Fire Alarm and Signaling Code.

c. NFPA 130 Standard for Fixed Guideway Transit and Passenger Rail Systems.

5. Military Specification (MIL):

a. MIL-STD 1472G – Human Engineering.

6. Telcordia:

a. GR-63-CORE NEBS Requirements: Physical Protection for Fiber Distributing Frames.

7. Underwriters Laboratories Incorporated (UL):

a. UL 508A Standard for Safety of Industrial Control Panels.

b. UL 486A-86B Standard for Safety of Wire Connectors.

1.03 SUBMITTALS AND TRANSMITTALS

A. Submit the following:

1. Equipment Integration Plan. Provide a plan that includes allowances for regular status review meetings with Sound Transit representatives during factory testing, installation and commissioning to ensure interoperability with existing and future systems. Include a description for how:

a. The designs are integrated within this scope of work, including identifying coordination meetings with appropriate sub-contractors, such as Mechanical, Fire alarm, Access Control, and Electrical.

b. The design and installation are integrated with the existing ST infrastructure.

c. The design and installation is integrated with SCADA work. The Systems Integration plan shall document the proposed method for BMS and EVS SCADA interfaces. See Exhibit C for guidelines on the SCADA – PLC interface functionality.

d. How work and submittals will be sequenced with the Systems Contractor to ensure integration.

2. Submit the items described below:

a. Shop Drawings containing the following information for each FCS control panel and enclosure:

1) Include the product data for each type of product specified within the Shop Drawing submittal. Include manufacturer's technical Product Data for each FCS system component furnished, indicating dimensions, capacities, performance characteristics, electrical characteristics, finishes of materials, installation instructions, and startup.

2) Hardware and software bill of materials.

3) Drawing List

4) Listing of connected data points, including connected control units and input devices. See FCS drawing subset for a preliminary list of I/O points. The Contractor shall confirm all points required to

perform mechanical, electrical and vertical circulation control logic is included in the list and if not add required I/O to be able to perform the logic.

5) Shop Drawings detailing equipment assemblies or components and indicating dimensions, weights, loadings, required clearances, method of field assembly, and location and characteristics of each field connection.

6) Each control device labeled with setting or adjustable range of control.

7) Diagrams for all required interconnecting wiring. Clearly differentiate between factory-installed and field-installed wiring.

8) Each conductor labeled utilizing identifying labels.

9) Manufacturer's general and detail arrangement drawings for switches and enclosures.

10) Provide all dimensions including enclosure.

11) System configuration showing I/O and peripheral devices, power supplies, diagrams, and interconnections.

12) Details of interface terminal cabinets (ITC), control panel and enclosure faces, including controls, instruments, and labeling.

13) Each I/O point labeled utilizing unique identifying labels. Use indicated labels where shown on the Plans.

14) Wiring diagrams detailing wiring for power, signal, and communications systems and differentiating clearly between manufacturer-installed and field-installed wiring.

15) Schematic flow diagram showing HVAC, dampers, and other control devices served.

b. Human machine interface (HMI) system graphics indicating monitored systems and devices, data (connected and calculated) point addresses, and operator notations. A representative sample of full scale, full color HMI prototypes of each type of screen shot in both hard copy and soft copy format:

1) Process screens.

2) Process and alarm screens.

3) Diagnostic and status screens.

4) Trending and logging screens:

a) Data shall be recorded continuously with a minimum of two years available for trend displays.

b) Coordinate method for data storage with Sound Transit.

5) HMI description, including:

a) Narrative overview of HMI describing navigation between categories and views, including popups.

b) Description of equipment status display and alarm visibility convention.

c) Written sequence of operation for each category providing logic and control, including set points. For I/O be passed through or monitored only, provide an explanation of screens and status indications.

c. Control programs, fully annotated to describe the function of each programming element and each functional segment for each Station.

d. IP Address List for all contractor-provided FCS devices connected on a network:

1) Develop and assign unique addresses based on Sound Transit guidance.

e. Submit a list of Ethernet switch requirements for switches to be provided by Sound Transit. The template, provided by Sound Transit, shall be populated by the Contractor.

f. Monitored/Controlled equipment list.

3. Testing, Commissioning, and Training Plans. Submit the following:

a. Provide a factory test plan and test procedure. This correlates to FCS Factory Tests and Inspection commissioning activities as stated in the Contract Documents:

1) Commissioning:

a) Support the project's Testing and Commissioning Manager with the planning and execution of tasks involving Division 25 components. Reference General Commissioning Requirements as stated in the Contract Documents.

b) Plans for a factory test must be submitted and approved prior to scheduled factory acceptance test activities. This procedure shall include detailed procedures and forms for performing Factory Acceptance Tests necessary to verify the performance of all active components in the FCS.

b. Training:

1) Submit a plan and course materials in digital format to be used for FCS training, tailored to the following departments:

a) Operations.

b) Maintenance.

c) Engineering.

4. Systems Interface Data Table (SIDT):

a. Provide an Excel spreadsheet list of points available for reading and writing from the building management system provided by the Contractor to the SCADA system provided or modified by Contractor, and another one from the emergency ventilation systems provided by the Contractor to the SCADA system provided or modified Contractor. The Contractor is required to submit the SIDT in the required format. A mostly complete version of the SIDT must be approved before start of the Contractor's Factory Acceptance Test (reference Contract drawings).

b. Provide a comprehensive list of all I/O points that includes both the field side points interfaced to monitored/controlled equipment, and on the HMI side for points developed in field controller logic interfaced through the OPC servers:

1) Include the following columns for descriptive fields for each point:

a) Unique point ID (typically the HMI tagname).

b) Equipment: ID of the equipment or device associated with the point.

c) Equipment description, air conditioning unit, UPS, etc.

d) Physical location of the equipment.

e) Point Description: Meaningful description for the point. The description should go from general to specific so that alphabetical sorting of the spreadsheet will group points relating to the same device together.

f) Point Functional Description: A description of the functional purpose of the point, if applicable. For example, to be exchanged with remote SCADA system.

g) Station ID.

h) Station Name.

i) Field Controller: ID of field controller where the point is read/written.

j) Field Controller I/O base ID.

k) Address of the point in Field Controller memory.

l) Address of the point in register memory, including bit number for discrete points and Modbus address for AIM SCADA integration.

m) Field Controller IP address.

n) Field Controller CPU Type.

o) Point Type:

i) AI (analog input).

ii) AO (analog output).

iii) DI (discrete input).

iv) DO (discrete output).

v) LAI (logical analog input from field controller to HMI).

vi) LAO (logical analog output to field controller from HMI).

vii) LDI (logical discrete input from field controller to HMI).

viii) LDO (logical discrete output to field controller from HMI).

p) State: For discrete points, a description of the on and off states in the form “On Description/Off Description”. For analog points, enter “NA”.

q) Alarm: For discrete inputs enter On/Off/None for the active alarm state. For analog inputs enter value.

r) EU: For analog points, the range and units of the scaled point, for example: “0-10 psi”.

s) For analog points, enter limits:

i) Minimum.

ii) Maximum.

t) For analog points, enter alarm limit range set points:

i) High-High.

ii) High.

iii) Low.

iv) Low-Low.

u) Indicate whether point is logged in the historical database. Logging of the following points are required, at minimum:

i) All analog points.

ii) All alarms.

iii) All discrete inputs and outputs.

5. Closeout Submittals:

a. As-Built Documents: Record actual locations of control components, including all field components and sensors. Revise Shop Drawings to

reflect actual installation and operating sequences. Include all data specified in Article 1.03, herein.

b. Provide Operation and Maintenance Manuals:

1) The manual shall provide a clear explanation of the theory, operation, and maintenance of the equipment accompanied by photos and schematic, wiring and mechanical assembly diagrams, as required. The manual shall be indexed and cross-referenced in an easily understood manner. The manual shall be loose leaf bound and shall include, but not necessarily be limited to, the following information:

a) Operating instructions.

b) HMI screenshots and a navigation manual for the HMIs.

c) Troubleshooting and fault isolation procedures for on- site level repair.

d) Equipment replacement procedures.

e) Disassembly and reassembly instructions.

f) A list of the components that are replaceable at the three possible levels of maintenance: on site, department shop, and the manufacturer's facility.

g) A test procedure to verify the adequacy of repair work.

h) A preventive maintenance schedule and instructions for the replacement of any electrical equipment, e.g., I/O cards, software, controller cards, etc.

i) A preventive maintenance schedule for inspection, removal, and replacement for each component.

j) A list of special tools provided by the manufacturer.

k) A list of recommended tools and test equipment required to perform all maintenance tasks.

l) Recommended spare parts list for one year's operation.

m) Interchangeable parts list showing parts common to items of equipment.

n) Equipment manufacturer's' descriptive literature including catalog cuts.

o) Record drawings.

p) The latest service bulletins, with issue dates, that describe service procedures.

q) The software source programs as well as trouble shooting, fault diagnostics, and shutdown procedures.

r) Computer software: Hard and electronic copies of the processor application source code, data table allocations, and descriptions of main software modules.

s) Training materials for FCS system operation and maintenance training sessions as specified herein.

6. Spare Parts: Furnish spare parts in accordance with Article 3.12, herein.

B. Contractor shall submit a pre- final printout of all code and logic implemented in the PLCs and Remote I/O. The code shall be thoroughly documented to clearly explain each rung and block of code or logic.

C. Contractor shall submit a final printout and electronic version of the as-built SIDT and all logic implemented in the PLCs and Remote I/O. The code shall be thoroughly documented to clearly explain the logic and code.

D. Transmit the following:

1. System Integrators Qualifications. Provide a printed certified qualification resume of the contractor or systems integrator performing the fabrication, configuration, and programming of the FCS components no later than 120 days after NTP

1.04 QUALITY ASSURANCE

A. Manufacturer Qualifications:

1. FCS hardware must be sourced from a limited number of manufacturers to ensure optimal operation and maintenance support. All manufacturers must have a proven track record in manufacturing components with the required capabilities and a successful operational history of at least five years.

2. The programmable controller manufacturer or the manufacturer's approved system integrator shall maintain a national network.

3. To facilitate future support, purchase FCS Controller and remote I/O hardware from a vendor within 150 miles of the Project. Available support within 150 miles of the Project shall include start-up service, emergency service calls, repair work, service contracts, maintenance, and training of personnel.

4. Provide a listing of at least five projects of similar magnitude, complexity and facility use type completed within the past five years.

B. System Integrator Qualifications:

1. The contractor or integrator shall have a minimum of 5 years' experience related to design, fabrication, programming, installation, start-up, and testing of similar control systems.

2. If more than one Contractor or systems integrator is employed, submit a certified resume for each one indicating their specific specialty and item of work:

a. Demonstration of technical competency with FCS system manufacturers is required through relevant certifications or reference letters from manufacturers/vendors, or hands-on demonstration if requested by the Resident Engineer.

C. Commissioning/Startup Personnel Qualifications: Where necessary, engage specially trained personnel in direct employ of manufacturer of FCS control system components.

1.05 FACTORY TESTS AND INSPECTIONS

A. General:

1. The following specifies the testing requirements for the processor equipment and HMI to be procured under this Contract. All tests described herein shall not preclude any additional standard tests normally performed by the manufacturers for similar equipment or requested by the Resident Engineer to verify performance.

   a. Transmit notice of scheduled factory test dates prior to proposed testing date(s). The notification shall include the expected duration and sequence of testing. Observations made during the tests, and test results shall be recorded in a document form acceptable to the Resident Engineer, certified by Contractor and submitted to the Resident Engineer for record before shipping equipment to site. All expenses in connection with or incidental to the testing shall be borne by Contractor excluding Resident Engineer travel expenses.

   b. The test procedure specified shall be sequential in the order prescribed. HMI, processor, communications equipment, or any components, which failed to perform as specified, shall be subject to retest at no addition cost to the Agency.

   c. All Factory Testing is to be complete prior to commissioning of the system.

B. HMI, Programmable Automation Controller (processor) and Remote I/O System:

1. Arrange for factory testing of the networked BMS workstation HMI, BMS and EVS processors, Ethernet switches, and remote I/O systems. Tests shall be witnessed unless otherwise determined by the Engineer.

2. Witnessed Tests shall be tested for operation, sequencing, inter-locking, communications, diagnostics, fault conditions, data logging and alarming functions as outlined in this Specification and the Drawings. All field functions shall be simulated in the factory for the purpose of this test. Witnessed testing activities shall include:

   a. Network ping testing.

   b. Network configuration verification, including switch and host addressing, redundant media, and switch failure response.

   c. Panel and PLC power supply fault response.

   d. Simulated field equipment interface for the following:

      1) Heat Pumps, AHUs and ACUs normal and fire response.

      2) Supply and exhaust fans normal and fire response.

      3) Motorized and solenoid actuated dampers and smoke dampers normal and fire response.

      4) Access controlled doors, including fire response.

      5) Coiling door and grilles, including fire response.

      6) FACP.

      7) Hydrogen alarm.

8) Clean agent alarm.

9) Lighting controllers.

10) Sump pump controllers.

11) Temperature sensors.

12) Temperature or pressure control loops performed by BMS.

13) Heating equipment.

14) Public address system.

3. Unwitnessed factory tests and checks shall include:

a. Check of control and power wiring insulation resistance and freedom from shorts and grounds.

4. Input/Output Points Validation Testing:

a. Prepare test forms for all points in the accepted preliminary SIDT.

b. Add validated column to spreadsheet for witness initials and witnessed date of successful demonstration of the point.

c. Demonstrate correct manipulation of I/O, including those in the SIDT and related functionality to Sound Transit representative in the field.

d. Demonstrate supervised response for all supervised-type discrete inputs and outputs.

e. Demonstrate points through actual operation of equipment or demonstration or by simulation if accepted by the Resident Engineer.

f. For testing convenience provide tables of the real and logical points in the HMI to easily verify the actual state of each point.

g. Test Modbus TCP interface to Sound Transit's Rockwell Collins HMI by simulating the remote server.

h. Demonstrate functionality of network interface to typical HVAC and power monitoring field equipment

C. Integrated EVS Testing:

1. Provide factory testing of the integrated EVS for each Station (Expanded EVS). These tests shall be witnessed unless otherwise determined by the Resident Engineer.

2. Integrated EVS testing shall take place by simulating all I/O and modes associated with the Expanded EVS including I/O for BMS, EVS and FACP at each Station. If construction sequencing allows, include SCADA in testing for verification of EVS I/O.

3. Equipment identical to that to be used for the operational, expanded EVS shall be provided, configured, staged, and network-connected at the factory test site:

a. Provide unique test PLCs and HMIs for BMS and EVS corresponding to each Station. This includes BMS and EVS processors BMS HMIs, and FACPs.

D. Historian Testing:

1. Provide a list of points to be sampled and stored in the historical server.

2. Demonstrate sampling and summary configuration for representative points.

3. Demonstrate trending interface for typical points.

1.06 FIELD MEASUREMENTS

A. Verify field conditions, measurements, and clearances prior to fabrication and installation of FCS system components.

1.07 MAINTENANCE SERVICE

A. Support:

1. There shall be FCS integration support personnel on- through the below periods:

a. Pre-revenue testing period:

1) Following installation, testing and commissioning, Sound Transit plans to operate the system in a pre-revenue testing mode to understand equipment performance, traction power, train control and related system components.

2) During this phase, the Contractor shall provide on-site technical advisors to assure continued operation of the FCS.

b. After Final Acceptance:

1) Provide support for hardware and software for a year after Final Acceptance.

2) Upon completion of a year of maintenance support system administration right shall transfer solely to Sound Transit.

3) Provide original source code to an escrow account at this time. Sound Transit will take possession of the source code in the account and unrestricted license to it if either the Contractor goes out of business or if the Contractor no longer supports the product(s) directly associated with the source code.

4) Contractor support shall respond to a problem report within 4 hours during normal business hours defined here as 9:00 a.m. to 5:00 p.m. Monday through Friday, Pacific time, and shall respond to a problem within 8 hours at all other times.

2. The programmable controller manufacturer or the manufacturer's approved system integrator, shall maintain as part of a national network, engineering service facilities within 150 miles of the project site, to provide start-up service, emergency service calls, repair work, service contracts, maintenance, and training of personnel. Emergency service shall be available within 24 hours of notification. During revenue service operations, the PLC manufacturer shall provide on call support.

1.08 POWER LINE PROTECTION AND SIZING

A. Equipment connected to ac circuits shall be protected from power-line surges. Equipment protection shall meet the requirements of IEEE C62.41. Fuses shall not be used for surge protection.

B. AC input power loads for the FCS panels, cabinets, and racks connected to the AC distribution system shall be submitted so that upstream distribution overcurrent protection and UPS capacity can be evaluated prior to approval of submittals and FCS panel fabrication.

1.09 DELIVERY, STORAGE AND HANDLING

A. Store equipment and materials inside and protected from weather and other hazards.

PART 2 - PRODUCTS

2.01 SYSTEM DESCRIPTION

A. The FCS control processing equipment shall be comprised of:

1. PLC chassis for both the EVS and BMS PLCs, housing modules including: control processors, Ethernet communications modules, and fiber optic communication modules.

2. I/O chassis, including all modules necessary for interface with field devices.

3. A summary processor warning alarm for all detectable, non-fatal faults in the controller chassis or I/O chassis.

4. A summary processor fail alarm for major faults including failure of a processor.

5. Appropriate analog and discrete I/O processing modules for monitoring and control of station electrical, mechanical, vertical circulation, and station plumbing systems and equipment.

B. Provide a HMI, equipment, software, and functional programming:

1. The BMS HMIs shall be a centrally located server-based system with a desktop workstation housed in each Station at the location indicated in the drawings. The central graphics and historical servers consist of existing equipment located in the Operations and Maintenance Facility (OMF) and the Backup Data Center (BDC). The existing graphics and historical server applications shall be enhanced to incorporate all elements needed to bring the new Stations online.

2. The desktop HMI shall allow Operator access to all equipment and systems via the same log-in screen. It shall allow access to programming and control commands, control software programming languages, and graphical representations. Develop dynamic control and monitoring displays representing station electrical, station mechanical, vertical circulation, and station plumbing systems and equipment.

3. Reference EXHIBITS at the end of this Section for the display symbols, colors, and example layouts that shall be followed to ensure that the HMI graphics provided by the Contractor conform to that at other stations in the system.

4. Contractor shall assume the level of detail, color, symbols and other display attributes shall be similar or the same as that as in EXHIBITS: FCS systems.

5. A prototype of the displays shall be developed in close coordination with Sound Transit's operations and engineering staff. This coordination will require reiterative modifications to the display. The Contractor shall assume this iterative process. The final version of the prototype shall be submitted to Sound Transit for approval. Operator access to the FCS HMI, for the purpose of system manipulation, shall not be designed or implemented to occur from any device other than the dedicated HMIs. This access shall be password protected.

6. The HMIs shall be connected to the FCS system via a Contractor provided IP local area network (LAN):

    a. For the BMS this shall be the existing train control network (TCN).

    b. For the EVS this shall be the existing emergency fan network (EFN).

    c. Coordinate network connections to TCN and EFN with the Systems Contractor providing the extended backbone infrastructure for these networks.

7. The I/O for this equipment shall be as indicated in the contract drawings.

C. Provide Remote I/O compatible with the FCS control processing equipment.

D. Provide communication equipment and fiber and copper cable transmission media, as well as required communication programming to transmit at each location shown on the Contract Drawings. See communications horizontal cabling as stated in the Contract Documents for FCS cable and conductor requirements.

E. Provide control equipment and associated software programming at each location shown on the Contract Drawings:

1. Develop software programming to achieve the functionality required for:

    a. Mechanical equipment sequence of operations.

    b. Plumbing equipment sequence of operations.

    c. Access control and monitoring.

    d. Fire Alarm response and monitoring.

    e. Power monitoring.

    f. Lighting control.

    g. PA/SCU interface for EVS.

2. Coordinate software programming with existing sites.

3. Coordinate software programming with Link Control Center:

    a. SCADA output commands.

    b. Alarm and Event information.

4. Provide Historical Collection of data.

F. Provide non-proprietary, open standard, communications network for the use of the FCS as indicated.

G. The EFN communications network shall be used exclusively for the EVS.

H. Provide control equipment and associated software programming at each location shown on the Contract Drawings.

I. The FCS shall provide overall system response time meeting the following requirements:

1. Digital input changes shall be indicated on HMI display within a maximum of 2 seconds following field device change.

2. Analog input changes beyond a change detection threshold shall be indicated on HMI displays within a maximum of 5 seconds following field device change.

3. Digital output commands entered at the HMI shall start execution in the field within a maximum of 2 seconds following command execution at the HMI.

J. Include installation and calibration, supervision, adjustments, and fine-tuning necessary for complete and fully operational system.

K. The complete system shall be designed for operation under the following environmental conditions. Where the installed location cannot provide the environment required, Contractor shall provide appropriate heat sinks and air tight enclosure to protect the system:

1. Ambient temperature: 0 degrees to 60 degrees Celsius

2. Relative humidity: 5 percent to 95 percent

L. The Contractor shall have the following additional responsibilities under the scope of this contract:

1. Provide submittal and/or record documentation.

2. The Contractor shall be directly responsible for the coordination and integration of the FCS with motor controls, packaged equipment controls, instrumentation, and other related equipment. The Contractor shall be responsible to obtain submittal information on the equipment specified or provided by other suppliers or disciplines. The Contractor shall communicate directly with the manufacturers and suppliers of all related equipment to determine all details of the equipment that may influence or affect the control system. The Contractor shall determine all requirements for and shall integrate all the equipment of the FCS into a unified and operational system as outlined in the Contract Documents.

3. Provide specified Sound Transit personnel training.

4. Participate in specified commissioning process of related equipment:

a. FACP (Fire Alarm Control Panel).

b. Mechanical equipment.

c. Vertical transportation system.

d. Electrical system.

5. Perform all system start-up and commissioning procedures as required and described by this Section.

6. Respond to project punch list and correct any system deficiencies.

2.02 MANUFACTURERS

A. Processor Equipment:

1. General Electric (GE) RX3i Platform:

a. Provide Ethernet Communications.

b. Provide Profinet Communications.

c. Provide 12 Slot expandable Bases.

d. Provide 16 point DI/DO Cards.

e. Provide 8 point Differential Current or Voltage Analog cards with isolation.

f. Remote I/O Equipment.

2. Approved Equal.

B. Fiber Optic Communications Equipment:

1. Phoenix Digital.

2. Approved Equal.

C. Ethernet Switching Equipment:

1. Switches are provided and configured by Sound Transit.

2. Provide mounting space, hardware, power supply, and communications cable connections for all switches installed in FCS control panels, racks, and cabinets. Ensure physical, electrical, and connection details are coordinated within Sound Transit using the Ethernet switch list submittal.

D. HMI Application Software:

1. GE Cimplicity.

2. Approved Equal.

E. Enclosure and Panels Seismic rated for zone installed:

1. Chatsworth.

2. Hoffman/Pentair.

3. Saginaw Control & Engineering.

4. Approved Equal.

F. Conduit Raceway:

1. Carlon.

2. Approved Equal.

G. Fiber Distribution Panel:

1. Corning.

2. Telect.

3. Approved Equal.

H. Ethernet Patch Panel:

1. FS.

2. Leviton.

3. Approved Equal.

2.03 SYSTEM CONTROL EQUIPMENT DESCRIPTION

A. FCS power requirements:

1. Permanent power for equipment will be provided by the Systems contractor UPS.

2. However, the Contractor shall provide temporary power for all FCS equipment and communications to enable the Contractor's complete testing before the Systems contractor UPS is installed.

3. Provide power from the communications room ac power system to power all FCS electronic equipment, i.e. – PLCs, RIO, IP switch, power supplies, etc. prior to the Systems Contractor installing the UPS.

B. FCS equipment environmental operating parameters:

1. Temperature:

a. In Communication Rooms: 50 degrees Fahrenheit to 95 degrees Fahrenheit (10 to 35 degrees Celsius).

b. All other locations including Communications Closets: 32 degrees Fahrenheit to 140 degrees Fahrenheit (0 to 60 degrees Celsius).

2. Relative humidity: 5 to 95 percent relative humidity.

3. Atmospheric pressure: 795 to 1080 kPa.

C. Building Management System HMIs:

1. BMS Workstation:

a. Gather software/hardware requirements through the request for information process.

b. Minimum sized to meet the above response time metrics when operating with twice the number of I/O in initial configuration.

c. Consult with Sound Transit IT department prior to purchase and provide in accordance with Sound Transit standards.

d. Workstation shall be confirmed and approved with ST Operations Technology before purchase.

e. Specified to operate in the environment where it will reside.

D. PLC Control Units:

1. GE RX3i system or approved equal.

2. Shall be comprised of a control chassis, housing PLC modules including: Control processor, Ethernet I/P module, and fiber optic communication modules. This layout shall provide communications for EVS and BMS controlled or monitored equipment and interfaces.

3. Fault Monitoring:

   a. Provide a summary PLC warning alarm for detectable, non-fatal faults in the controller chassis or I/O chassis.

   b. Provide a summary PLC fail alarm for major faults.

   c. Every monitoring device and link part of the BMS and EVS shall be monitored. Any device or link fault shall report as an alarm on the alarm manager for that system.

4. EVS monitoring must conform to requirements of NFPA 72 and 130.

5. Units monitor or control each input/output point; process information; execute commands from operator terminals or LCC operators; and download data from or upload data to HMI units.

6. Control Units shall be equipped with web server capability to provide control and status information to web-browser-based applications.

7. Control functions operate, regardless of system communications network status, over the fiber optic I/O network communication links. Functions include the following:

   a. Discrete/digital and analog.

   b. Monitoring, controlling, or addressing data points.

8. FCS I/O circuits that interface to the FACP shall be supervised type.

9. Each FCS control panel shall continuously perform self-diagnostics, communication diagnosis and diagnosis of all subsidiary equipment. Information concerning detected diagnostic faults shall be broadcast network-wide via the I/O network.

10. All necessary software to form a complete operating system as described in this specification shall be provided. Applicable software programs shall be provided as an integral part of each FCS panel and shall not be dependent upon any higher-level computer for execution.

11. Sensor and Control Wiring Surge Protection: Controllers shall have sensor and control wiring surge protection with optical isolation, metal oxide varistors (MOV), or silicon avalanche devices. Fuses are not permitted for surge protection.

E. FCS System Communications Network (LAN):

1. Ethernet/IP and Profinet communications protocols that support communications at 1000Base-LX.

2. Communication via single mode fiber optic cables.

3. IP Addressing:

a. Except for FCS switches provided by Sound Transit, any IP addressing that is required for equipment being installed under the contract that is not addressed by the specification will require an RFI at least 3 months prior to the anticipated need for configuration and subsequent approval by Sound Transit before being used.

4. The network shall be time synched to Sound Transit's TCN (for BMS) and EFN (for EVS) domains.

F. Software:

1. With approval from Sound Transit IT, update to latest versions of software at project completion. Include and implement the following capabilities:

a. Software shall be developed to provide the control units with the functionality specified herein and on the Plans.

1) Control logic for HVAC as described in the mechanical subset.

2) Manual (operator initiated) selection and control of individual electrical, systems, HVAC, plumbing, and mechanical system components.

3) Monitoring and controlling of indicated field equipment and devices.

2. Software shall be developed to provide the HMI units with the functionality specified herein and on the Plans:

a. Input/output Capability:

1) Request display of current values or status in tabular or graphic format.

2) Command selected equipment to specified state.

3) Initiate logs and reports.

4) Change analog limits.

5) Add, delete, or change points within each control unit or application routine.

6) Change point input/output descriptors, status, alarm descriptors, and engineering unit descriptors.

7) Add new control units to system.

8) Modify and set up maintenance scheduling parameters.

9) Develop color graphic displays based on MIL-STD 1472G.

10) Automatically archive select data even when running third party software.

11) Provide capability to sort and extract data from archived files and to generate custom reports.

12) Support alarm/data printer operations.

13) Operator selectable output of screen graphical images, data trend logs, and/or alarm summary information to printer.

14) Automatic time and date stamped output of all system alarms and automatic or manual control system actions to printer.

15) Select daily, weekly or monthly as scheduled frequency to synchronize time and date. Accommodate daylight savings time adjustments.

b. Dynamic Color Graphic Displays:

1) Utilize symbols based on Sound Transit standards and ISA.

2) The system shall provide dynamic graphic data:

a) Limit output of real-time live dynamic data per graphic screen to 60 objects.

3) Up to 1,000 separate graphic pages.

4) Graphic screens to be developed in conjunction with Sound Transit staff include but are not limited to:

a) Graphic screens will match existing facilities and adhere to FCS graphic. Refer to EXHIBITS for standards utilizing available symbols, and libraries.

b) Overviews of each electrical, plumbing, or mechanical system, providing means to quickly select specific graphics and indicating system-wide operating parameters and alarms.

c) Graphical representation of ventilation equipment configuration at each specific station location, indicating status of each ventilation system component.

d) For each station system, provide screens showing user-configurable historical data trend logging of equipment status and monitored signal values.

e) System-wide alarm summary screen indicating date, time, and nature of alarm event and providing the means to quickly select the graphical representation screen pertaining to the affected equipment or system.

f) PLC and communications network overview screens indicating status and diagnostic information generated by the system communications and I/O communications network sub-systems. Screen shall include:

i) PLC status, including status of redundant PLC.

ii) I/O communication status.

iii) Media pathway status, including a break in the fiber optic ring.

c. Operator System Access: Via software password with minimum 10 access levels at HMI.

d. Database Creation and Support: Changes shall utilize standard procedures. Control unit shall automatically check workstation data base files upon connection and verify data base match. The listing shown in the drawings should be assumed to be 95 percent complete with additions or modifications to the final I/O list coordinated with the installation contractor, procured equipment, and Sound Transit. Sound Transit, at its sole discretion, may add or delete points. The Contractor shall coordinate with Sound Transit during its preliminary design to finalize the points list. The Contractor shall assume this coordination, providing additional I/O modules if required, and providing PLC or Remote I/O configuration of the revised points.

e. Minimum capability shall include:

1) Add and delete points.

2) Modify any point parameter.

3) Change, add, or delete English language descriptors.

4) Add, modify, or delete alarm limits.

5) Add, modify, or delete points in start/stop programs, trend logs, etc.

6) Create custom relationship between points.

7) Create or modify BMS loops and parameters.

8) Create or modify override parameters.

9) Add, modify, and delete any applications program.

10) Add, delete, develop, or modify dynamic color graphic displays.

f. Alarm Processing:

1) Abnormal condition: Cause alarm and appropriate message, including time, system, point descriptor, and alarm condition.

2) Critical alarm or change-of-state: Display message, stored on disk for review and sort, or print.

3) Display alarm reports on video. Display multiple alarms in order of occurrence.

4) Define time delay for equipment start-up or shutdown.

5) Allow unique routing of specific alarms.

6) Operator selectable configuration specifies if alarm requires acknowledgment.

7) Continue to indicate unacknowledged alarms after return to normal.

8) Alarm notification.

9) Display indicating alarm condition.

10) Selectable audible alarm indication.

11) All FCS system alarms shall be available via SCADA. The SCADA Contractor shall coordinate closely with Sound Transit during FCS programming to provide this functionality.

G. Firmware:

1. PLCs:

a. Ensure the firmware version is consistent between all identical PLC CPU, I/O, and communication modules provided, including all spares.

2. HMIs:

a. Ensure firmware version is consistent between all identical touchscreen HMI models provided, including spares.

2.04 CONTROL PANELS

A. Communications Room Equipment Rack:

1. Racks shall be Chatsworth Products (CPI) Seismic Frame cabinet series, or approved equal.

2. Rack shall be rated Zone 3 compliant to Bellcore GR-63-CORE for Network Equipment Building Systems (NEBS).

3. Frame: Welded steel.

4. Rack Framework: 11 gauge ASTM A570 steel.

5. Size: Sized for standard 19-inch equipment widths. 84 inch H (43 rack units), 36 inch usable depth, 27.32 inch width.

6. Paint: ANSI 61 gray and resistant to corrosion.

7. Mounting Rails: Standard EIA-310 hole pattern with pre-tapped holes.

8. Ventilation: Louvered top panel and fan to provide air flow of 400 CFM minimum.

9. Paneling: Enclosed with side panels.

10. Doors: Hinged, swing open, and removable doors.

11. Design racks to accept 120 Vac single phase service.

12. Mounting Equipment:

a. Expansion Anchors: Hilti Model HSLB M12-25 or approved equal.

b. Cabinet isolation barrier, non-conductive phenolic resin.

13. Shall be assembled by a UL 508A certified integrator.

B. Communications Distribution Cabinet:

1. Single door, enclosure rated NEMA Type 3X for locations not in a room or closet. Provide NEMA 12 for all other locations.

2. Enclosures shall, as a minimum, be constructed of 16 gauge steel with all seams continuously welded and smoothly finished, and shall possess integral, rolled lip framing around the door to prevent dirt, water, and other debris from falling into the cabinet when the door is opened.

3. Enclosure door shall be fully gasketed with glued-in-place oil resistant gaskets and shall be equipped with a screwed-down door clamp mechanism and pad lockable hasp assembly.

4. Exterior finish shall be cabinet manufacture's standard corrosion inhibiting, baked-on enamel finish over phosphatized surfaces.

5. The enclosure interior surfaces and back panels shall be finished with the cabinet manufacturer's standard corrosion-inhibiting, white high-gloss baked-on enamel finish.

6. Shall be assembled by a UL 508A certified integrator.

C. Interface Terminal Cabinets (ITCs):

1. Provide wall-mounted, single door, enclosures rated NEMA Type 3X where not in a room or closet and NEMA 12 for all other locations.

2. Enclosures shall, as a minimum, be constructed of 16 gauge steel with all seams continuously welded and smoothly finished, and shall possess integral, rolled lip framing around the door to prevent dirt, water, and other debris from falling into the cabinet when the door is opened.

3. Enclosure door shall be fully gasketed with glued-in-place oil resistant gaskets and shall be equipped with a screwed-down door clamp mechanism and pad lockable hasp assembly.

4. Exterior finish shall be cabinet manufacturer's standard corrosion inhibiting, baked-on enamel finish over phosphatized surfaces.

5. The enclosure interior surfaces and back panels shall be finished with the cabinet manufacturer's standard corrosion-inhibiting, white high-gloss baked-on enamel finish.

6. Shall be assembled by a UL 508A certified integrator.

2.05 CONTROL PANEL INTERNAL COMPONENTS

A. Fiber Optic Patch Panels: Provide surface mount telecommunications outlet housings of a high-density, low-profile, design with four field-configurable ports, snap-lock cover, and cable knockouts on back. Base shall include tie-wrap anchor points at all cable entrances. Housings shall be mountable with screws and have mounting holes that are compatible with standard NEMA wall boxes. Constructed of high-impact self- extinguishing plastic. UL listed.

B. CAT6 Patch Panels: Provide 24-port minimum capacity surface or rack-mount telecommunications outlet housings of a high-density, low-profile, design. Rack-mount housings shall be mountable with screws and have mounting holes that are compatible with standard 19-inch racks. Constructed of 16 gauge steel. UL listed.

C. Managed Ethernet Switches:

1. Switches are provided and configured by Sound Transit.

2. Provide mounting space, hardware, power supply, and communications cable connections for all switches installed in FCS control panels.

3. Switches have capabilities for both Fiber Optic Cable Type SC Connections and RJ-45 10/100/1000 copper cabling.

4. Switches shall have a port count to accommodate Contractor equipment that requires Ethernet connectivity plus have 25 percent spare ports at each Ethernet switch location.

5. For TCN, Ethernet connectivity is required for the BMS. For the EFN, Ethernet connectivity is required for the EVS only.

D. Terminal Blocks: Provide channel mounted, impact and combustion resistant, self-extinguishing type terminal blocks. Terminal blocks shall be rated for its use. Furnish all required end plates, channel clamps, separators and other components required for installation in accordance with the manufacturer's recommendations. Terminal blocks shall each be equipped with an appropriate label which is large enough to legibly accommodate identifying characters.

E. Channel Mounted Circuit Breakers: Provide units equipped with "tripped" indication rated to protect the equipment. Channel mounted breakers shall mount on the same size and type of mounting channel as the terminal blocks specified herein and shall possess terminals each capable of accommodating one #14 AWG wire of the type specified herein. Each breaker shall be equipped with an appropriate label and labeling space large enough to legibly accommodate a three-digit identifying number. Provide thermal- magnetic type circuit breakers with a "normal blow" tripping characteristic curve. Provide selective coordination of all upstream and downstream circuit protection devices.

F. Wire way: Provide slotted type plastic wire ways, with covers, of the size for neat installation of interconnecting conductors. Wire ways shall be restricted slot type to prevent accidental removal of wires and shall be constructed of rigid, non-flammable polyvinyl chloride (PVC). Wire way shall be UL recognized for continuous operation at 140 degrees Fahrenheit.

G. 24VDC Power Supplies: Provide regulated 24 volt DC power supplies. Power supplies shall be sized to provide output power of additional 33 percent of initial installed load.

H. Each FCS control enclosure and control panel shall be provided with a 120VAC GFCI convenience receptacle for use by portable lap-top computers.

PART 3 - EXECUTION

3.01 SEQUENCE OF OPERATION

A. The Contractor shall provide needed raceway, wiring, hardware and program to perform mechanical, electrical and vertical circulation control logic. The FCS subset drawings has a listing of required I/O however these may not include all I/O needed to implement logic described in the mechanical, electrical and vertical circulation subset. This Contract

requires the Contractor to add the needed I/O to the listed I/O and to implement all logic described in the mechanical, electrical and vertical circulation subset.

B. The BMS and EVS Systems shall be programmed to operate all equipment and interfaces as specified herein.

C. The HMI shall dynamically display current status or position of each item of equipment.

D. Normal Operation:

1. The HMI indicates 'Normal' system status.

2. Ventilation, HVAC, vertical circulation, and plumbing systems operate according to their normal sequence of operations.

E. Abnormal Operation:

1. Each item of equipment shall be monitored via device feedback to ensure correct operation. Failure of equipment to respond correctly within the timeout period limits shall result in the following actions:

2. An alarm message shall be displayed on the HMI. The message shall indicate the specific equipment, device and nature of the alarm.

3. All FCS system alarms status indications, and controls shall be made available to the LCC SCADA system from a Contractor-furnished and installed network connection. Contractor shall coordinate closely with Sound Transit during FCS programming. This interface shall be delivered in such a way that no BMS or EVS software or hardware configuration change would be required when the future SCADA is connected.

3.02 EVS FUNCTIONS

A. Monitors status of FACP.

B. Provide a means to remotely initiate a fire alarm at each station's FACP.

C. The specific points and functionality shall be coordinated with the FACP subcontractor.

D. Interface between FACP and PA/SCU.

3.03 EVS VENTILATION MODES

A. [NOTE TO DESIGNER: ADD OR MODIFY AS NECESSARY BASED ON TESTS ADDED OR MODIFIED ABOVE DEPENDING UPON THE LOCATION DESIGN FOR FCS]

3.04 EVS INTERFACES

A. [NOTE TO DESIGNER: ADD OR MODIFY AS NECESSARY BASED ON TESTS ADDED OR MODIFIED ABOVE DEPENDING UPON THE LOCATION DESIGN FOR FCS]

B. Building Management System:

1. Provide sufficient discrete I/O to FACP to ensure proper BMS response as required by the mechanical sequence of operation.

2. EVS PLC discrete output for health status is monitored by the BMS PLC.

C. Fire Alarm Control Panels:

1. EVS receives indication from FACPs in alarm and sends a signal to place the FACP into alarm based on a command initiated at the LCC.

D. EVS SCADA:

1. Send and receive points with central EVS servers provided by systems contractor.

E. PA/SCU:

1. Send and receive points with PA/SCU provided by systems contractor.

2. Coordinate with PA/SCU installer for emergency announcement testing and commissioning.

3.05 EXAMINATION

A. Verify that conditioned power supply is available and matches required rating to control units, HMI and server. Verify that field end devices and wiring are correctly and securely installed before proceeding with installation.

3.06 INSTALLATION

A. Install equipment as indicated to comply with manufacturer's written instructions.

B. Install software in control units and HMI. Implement all features of programs to specified requirements and appropriate to sequence of operation.

C. Connect and configure equipment and software to achieve the sequence of operation specified.

D. Verify location of exposed control sensors with plans and structural details before installation.

E. Install labels and nameplates to identify control.

3.07 ELECTRICAL WIRING AND CONNECTIONS

A. Install all cables and conductors in raceway.

B. Conceal raceway, except in mechanical rooms and areas where other conduit and piping are exposed.

C. Bundle and harness multi-conductor instrument cable in place of single cables where a number of cables follow a common path.

D. Fasten flexible conductors, bridging cabinets and doors, neatly along hinge side; protect against abrasion. Tie and support conductors neatly.

E. Label all control conductors, utilizing identifying labels shown on the Construction Drawings, for future identification and servicing of control system.

F. Connect electrical components to wiring systems and to ground as indicated and instructed by manufacturer. Tighten connectors and terminals, including screws and bolts, according to equipment manufacturer's published torque-tightening values for equipment connectors. Where manufacturer's torqueing requirements are not indicated, tighten connectors and terminals according to tightening requirements specified in UL 486A-86B.

G. Megger and continuity test all cable conductors after termination, but prior to landing.

3.08 FIELD QUALITY CONTROL

A. FCS Signal Integrity: Perform field quality checks as part of the Pre-Commissioning Checklist to verify interconnections between the FCS system and the field instruments and devices. All signal interconnections shall be individually physically verified for proper terminations and noted on the Pre-Commissioning Checklist. Completed checklist shall be submitted as part of the final test report.

B. ITCs: Perform field quality checks as part of the Pre-Commissioning Checklist to verify correct interconnections between the ITC terminals and the field equipment, instruments and devices. All signal interconnections shall be individually physically verified for proper terminations and noted on the Pre-Commissioning Checklist. Completed checklist shall be submitted as part of the final test report.

C. For any reason NRTL certifications or listings for FCS enclosures are voided throughout construction, provide field re-certification.

3.09 COMMISSIONING

A. Refer to Section 25 08 60 – Commissioning of Link Station Controls.

B. Manufacturer's Field Services: Provide the services of a factory-authorized service representative to assist in commissioning of BMS and EVS systems.

C. Replace, at no cost to Sound Transit, all controls and equipment found to be damaged, malfunctioning, or that does not meet acceptable system performance standards. Submit a corrective action plan for all noted deficiencies identified during the commissioning process.

3.10 TRAINING

A. Refer to Training specification as stated in the Contract Documents.

B. The Contractor shall be responsible for training coordination and scheduling and for ensuring that training is completed on all equipment per the specifications.

C. Sound Transit’s operating and maintenance staff shall receive comprehensive orientation and training, to include: Training on all modes, functions, operations and maintenance of all features, systems, and equipment as a provided by this project and as defined and outlined herein.

D. Provide training for a minimum of eight Sound Transit Employees on-site or at a Sound Transit office location as follows:

1. Training in the receipt, handling, and acknowledgment of alarms.

2. Training in FCS operation including logging-in, reviewing alarm and status displays, navigating HMI graphical screens, and the initiation of both automatic and manual control output actions from the FCS HMIs.

3. Training in FCS functional operation and monitoring of each FCS subsystem within the station. Training to include complete overview of system operation and available operating modes and parameters.

4. Training on trending, archiving, and report generation using data points available within the FCS.

5. Maintenance training covering each aspect of both the hardware and software elements of the FCS including preventative maintenance, emergency repair, and control unit and HMI programming development and modification.

6. How to configure and deploy each type of spare component

7. Provide video recording of the training and allow duplication and distribution within Sound Transit.

3.11 SPARE PARTS

A. All spare parts shall conform to the requirements of PART 2, PRODUCTS, of this Section.

B. Provide the below indicated quantity and type of new spares, in original unopened packaging, to enable the replacement of the following components in the event of a failure:

1. Six of each type of fuse used within the FCS system.

2. Two of each type and rating of relays and contactors used.

3. Three of each type of relay/contactor/module socket base used.

4. Two of each type and rating of channel mounted circuit breakers used.

5. One of each type of PLC, remote I/O, communications graphics card, DI module, DO module, analog module, and power supply module used.

END OF SECTION

EXHIBITS (On Proceeding Pages:

1. EXHIBIT A: Control System Standards Guidelines – Local BMS
2. EXHIBIT B: BMS HMI Display Samples
3. EXHIBIT C: Rockwell - Collins Alarms Message Configuration

EXHIBIT A

SECTION 25 60 00

CONTROL SYSTEM STANDARDS GUIDELINES – LOCAL BMS

SOUNDTRANSIT

SCADA – Operations Technology & Design Engineering and Construction Management

Control System Standards Guidelines – Local BMS

Rev 2.

CONTENTS

Purpose Statement: 2
Centralization of local hmi & Historian: 3
Standards 4
PLC Tag Naming Convention 4
Programming 7
Alarms 8
HMI Graphics 9
Historian configuration and trending 14
Trending: 15
Software version control 15
Important considerations 15

PURPOSE STATEMENT:

The following shall serve as a guideline for standardization in the development of Link Light Rail station Field Control Systems (FCS) point naming, Human Machine Interface (HMI) graphics, and historical collection of data. A station's FCS consists of a Building ManagementSystem (BMS) and an Emergency Ventilation System (EVS). Each FCS will interface with Sound Transit's central Supervisory Control and Data Acquisition (SCADA) system, developed by Rockwell Collins. The operational SCADA system provides situational awareness and control of the FCS systems and their connected devices. This document does not address graphics or collection of data within the central SCADA (Rockwell Collins "RC") system. However, the use of consistent point naming and PLC tags will provide consistent interfaces with the central SCADA system via a Modbus interface. The graphics and data collection discussed in this docucment pertain to the centralized "Local" BMS HMI and Historian for each station, intended to provide detailed information about systems monitored and controlled by the BMS and EVS.

- Two BMS HMI servers, one housed at the Operational Maintenance Facility (OMF) and the second redundant server at the Backup Data Center (BDC).
- A Historian server, located at the OMF.
- The centralized servers will utilize Cimplicity for the HMI graphics and GE iHistorian for data collection and trending capabilities.
- Each station will utilize a laptop locally as an interim BMS Cimplicity server for commissioning and testing until the respective Systems contract implements the network to enable connection to the centralized servers.
- Integration into the centralized servers shall be coordinated with Sound Transit Operations Technology (OT) to ensure proper software versions and configuration management. After integration, spot check testing is to be done from the centralized location of HMIs and Historian as agreed upon by the involved teams.
- Each station will provide a client workstation located in the Fire Command Center (FCC) or Fire Command Room (FCR) room as the permanent BMS HMI, which will interface with the central servers to provide graphical and historical information at all the programmed stations.
- Local touch screen clients at Remote I/O (RIO) for BMS will be limited, location to be determined with ST and future contract documents.
- The EVS will not interface with the Cimplicity server. The operational RC SCADA is the primary interface and control for the EVS. For tunnel stations, an Emergency Ventilation Control Panel (EVCP) touchscreen will serve as the local HMI, located in the FCC room. Additional RIO touchscreens will be located near Fan Control Panels. EVS touchscreens utilize GE QuickView screens for graphics and programming.
- The Historian (GE iHistorian) will interface with each tunnel station EVS to collect data related to fan operation. As the EVS and BMS are on two independent networks, the interface will occur through a data concentrator at the OMF.

CENTRALIZATION OF LOCAL HMI & HISTORIAN:

Northhgate Link Extension (NGLE) is developing a centralized "Local" BMS HMI and Historian with the intent that future stations, including East Link (ELE) will be integrated. The system developed by NGLE will following the guidelines as detailed in this document.

STANDARDS

PLC Tag Naming Convention

Below is a list of basic standards related to HMI and PLC programming.

1. **PLC Tag Naming: (Max 32 characters)**:
   a. **PLC Tag naming convention**:
      i. **LXX_YYYY_ZZ.AAAAAABBB**: Pre-configured standard Cimplicity objects
      ii. **LXX_YYYY_ZZ_AAAAABBB**: Unique Cimplicity tags in a project. This may be completely unique points, or extra points associated with a piece of equipment that are outside of the ST standard that may be required for sequence or control
      iii. **LXX_YYYY_ZZ_AAAAABBB_CC** : Commands sent from the HMI to the PLC or PLC generated (soft) alarms.
         - LXX=location
         - YYYY=Equipment
         - ZZ=instance number for equipment
         - AAAAAA=Function Code (needs to be better defined, see template in design)
         - BB=instance number for tag
         - CC=I/O type; DI, DO, AI, AO,….
   - Examples:
      - Tagname in the PLC and Cimplicity using a pre-configured standard Cimplicity object:
        PLC : N09_ACU_01_RUNNING_DI
        HMI : N09_ACU_01.RUNNING
      - Tagname in the PLC and Cimplicity for a non-standard Cimplicity point:
        PLC: N09_AHU_01_HAH_DO (this is a Hydrogen Alarm High concentration room air purge command)
        HMI: N09_AHU_01_HAH
      - Tagname in the PLC and Cimplicity for commands and PLC generated (soft)
        PLC: N09_EFAN_01_MAINTENANCE_MODE_HMI
        HMI : N09_EFAN_01.MAINTENANCE_MODE_CMD
        In this circumstance, the _HMI suffix is used in the PLC to differentiate command source between the Cimplicity BMS and the Link Control Center (LCC) while _CMD is used in the HMI to denote the actual function of the point.
      - Alarms
        PLC: N09_EFAN_01_FAIL_TO_RUN_ALM
        HMI: N09_EFAN_01.FAIL_TO_RUN_ALM

2. **Tag Description: (Max 70 characters)**
   a. AAAA YYYY-ZZ Description
      i. AAAA=Station Abbreviation
      ii. YYYY=Equipment

iii. ZZ=instance number for equipment
iv. Description (Equipment being sensed=>Status name=>Status type),

b. Description to include station name abbreviation convention examples,
i. ALS EF-02 Bearing high temperature alarm.
ii. ALS EF-02 Running Status
iii. ALS EF-02 Running Feedback
iv. UWS EFAN-03 Fan running status.
v. BHS AHU-01 VFD speed.
vi. TLA/FLA Link Station abbreviation list:

Alignment	Link Extension	Contract	Facility Designation	Station / Facility Location	Facility Code
NORTH	NGLE	N160	NP11	[Northgate Garage]	
NORTH	NGLE	N160	N11	Northgate Station	**NGS**
NORTH	NGLE	N160	N10	[Maple Leaf Portal]	**MLP**
NORTH	NGLE	N150	N09	Roosevelt Station	**RVS**
NORTH	NGLE	N140	N07	University District Station	**UDS**
NORTH	ULink	U250	N05	University of Washington Station	**UWS**
NORTH	ULink	U240	N03	Capitol Hill Station	**CHS**
CENTRAL	Central			[Pine Street Stub Tunnel / Ventilation Bldg]	**PSVB**
CENTRAL	Central			[Convention Place Station]	**CPS**
CENTRAL	Central		C03	Westlake Station	**WLS**
CENTRAL	Central		C05	University Street Station	**USS**
CENTRAL	Central		C07	Pioneer Square Station	**PSS**
CENTRAL	Central		C09	International District Station	**IDS**
CENTRAL	Central		C13	Stadium Station	**STDM**
CENTRAL	Central	C700	C15	SODO Station	**SODO**
CENTRAL	Central	C710	C19	Beacon Hill Station	**BHS**
CENTRAL	Central	C710	C23	Mount Baker Station	**MTBK**
CENTRAL	Central	C735	C25	Columbia City Station	**CCTY**
CENTRAL	Central	C735	C27	Othello Station	**OTHL**
CENTRAL	Central	C735	C29	Rainier Beach Station	**RBCH**
CENTRAL	Central	C755	C35	Tukwila Station	**TUK**
CENTRAL	Central	C420	C37	SeaTac / Airport Station	**SEA**
CENTRAL	Central		M01	[O&M Facility]	**OMF**
CENTRAL	Central		M02	[MOW Facility]	**MOW**
CENTRAL	Central		M03	[Link Control Center]	**LCC**
CENTRAL	Central		Y01	[O&M Yard]	

SOUTH	SLink	S440	S01	Angle Lake Station	**ALS**
SOUTH	SLink	S445	SP01	[Angle Lake Garage]	
EAST	ELE	M200	M04	[O&M Facility East]	**OMFE**
EAST	ELE	M200	M05	[MOW Facility East]	**MOWE**
EAST	ELE	M200	Y02	[O&M Yard East]	
EAST	ELE	E130	E01	Judkins Park Station	**JPS**
EAST	ELE	(WSDOT)	E03	[Mount Baker Lid]	**MBT**
EAST	ELE	(WSDOT)	E05	[Mercer Island Lid]	**MIT**
EAST	ELE	E130	E07	Mercer Island Station	**MIS**
EAST	ELE	E320	E09	South Bellevue Station	**SBS**
EAST	ELE	E320	EP09	[South Bellevue Garage]	
EAST	ELE	E335	E11	East Main St Station	**EMS**
EAST	ELE	E335	E15	Bellevue Downtown Station	**BDS**
EAST	ELE	E335	E19	Wilburton / Hospital Station	**WBS**
EAST	ELE	E335	E21	Spring District / 120th St Station	**SDS**
EAST	ELE	E340	E23	Bel-Red / 130th Station (+Parking?)	**BRS**
EAST	ELE	E360	E25	Overlake Village Station	**OVS**
EAST	ELE	E360	E27	Redmond Technology Center Station	**RTCS**
EAST	ELE	E360	EP27	[Redmond Technology Center Garage]	

c. **Automated to create table of existing function abbreviations to assist with standardize these function descriptions and share with ST.**

3. **Tag Addressing**:
   Numreical addressing to be based on 5 numerical digits, %RXXXXX, %AIXXXXX, %AQXXXXX, %DIXXXXX.....

4. **Tag Resource ID:**
   Resource ID to be used for subsystem description
   a. BMS Resource ID
      i. HVAC
      ii. Lighting
      iii. Plumbing (sump pumps, heat trace, etc.)
      iv. Electrical (UPS, Inverter, power ...sub metering)
      v. BMS (PLC CPU and Card diagnostics, power supplies, PLC Comms, etc.)
      vi. Vertical Transportation (Elevators/Escalators)
      vii. Fire (FACP, Fire Alarm, fire protection, clean agent, Stairway Pressurization, fire smoke dampers)
      viii. Access Control (doors, gates, lockers, access cards,)
      ix. PA/VMS
      x. Comm (network)
   b. EVS Resource ID
      i. EVS (similar to BMS PLC)

ii. Fire (FACP, Emergency Fans/Dampers/starter/VFD,sensors, …)
iii. PA/VMS (SCU, PA, VMS, …)
iv. Electrical (Sub Metering, Emergency Fan Electrical)

PROGRAMMING

1. Tag naming and description and addressing shall follow same standard as listed above.
2. Calculation routines shall be explained in the comment section above the rung.
3. Each routine shall be commented. At least header with date, author, and description.
4. Commenting
5. No indirect addressing
6. Assigned addressing for all points.
7. All logic and alarming to be done in PLC not HMI
8. All changes or updates shall be shall be stated in comments for revision control
9. Runtime: Calculate and display equipment Yesterday, Today, and Total runtimes in hour's interval with manual reset capability on the Total runtimes when needed.
10. Runtimes: Display Equipment runtime and historically log the runtimes.

ALARMS

Alarm class (priority level), use five levels same as Rockwell Collins:
(NOTE: The use of "Active Operations" or "Operational" in the descriptions below implies train operations, not the operations of building or mechanical systems.)

1. **Critical (P1)**:
   (UnAck: Black Font /Red background
   Ack: Red/Black)
   Alarms indicating a potential Hazardous Condition resulting in injury or property Destruction without immediate action.
2. **Major (P2):** (Orange not available as a standard option)
   (UnAck: Black Font /Orange background
   Ack: Orange/Black
   Alarms indicating an adverse effect or potential adverse effect to Active Operations
3. **Minor(P3):**
   (UnAck: Black Font /Yellow background
   Ack: Yellow/Black)
   Operational alarms that are non-critical but provide information and indicate a potential problem if not addressed
4. **Informational(P4):**
   (UnAck: Black Font /White background .
   Ack: Aqua/Black)
   Alarms/Events that are needed for history and maintenance purposes that can be drilled down upon, but do not need to be seen by Operator
5. **Comm Fail:**
   (UnAck: Black Font /Fuchsia background
   Ack: Fuchsia/Black)
   Communication failure Alarms. Objects and area pertaining to comm fail to have fuchsia box around it with hatch inside.

HMI GRAPHICS

1. All screens to have base template with header, navigation, alarming, screen name bar at bottom

2. List-style navigation to left of the navigation screen showing the geographic location of equipment
3. Overview screen to show just the important info as example shown below.
4. Standardize screen size for all (750x550). Current standards varies.
5. Contrast between text and background colors. Use of gradient with text on top should be avoided.
6. Standardize background colors: Black
7. Use integrated alarm screen at bottom of screen.
8. Limit use of scripting to run in background.
9. Font sizing (not smaller than size 8 font) –see screen NO3-ahu-09. Limit number of different size text on screens. Heading shall be size 14, subheadings 12 and all else 8.
10. Have list-style navigation to left of the screen showing the geographic location of equipment.
11. Fire Smoke Dampers: Green indicates Open, Red is Closed and Yellow is In-Transition with Red or Orange outline for alarm indication.

12. Control panel insets to have black background with a grey frame/outline.
13. HVAC related buttons to have a small bevel and grey background
14. Duct-smoke alarms to be locate in upper left
15. Smoke alarms to be located top left on every screen
16. Lighting Control override boxes and indications to match the Fire Override box for commands and status.
17. DID status boxes grey border with white text status and black background.
18. BMS Chassis-Architecture Screen to have black backgrounds with white text and grey outlines with status lights in the center.
19. All network connections to be Green for normal and Red for alarm or fault state.
20. DC Power Supply indications and commands match the Fire Override box for commands and status. Red is alarm, Yellow is unacknowledged and Green is normal
21. Use gray power lines for static lines.

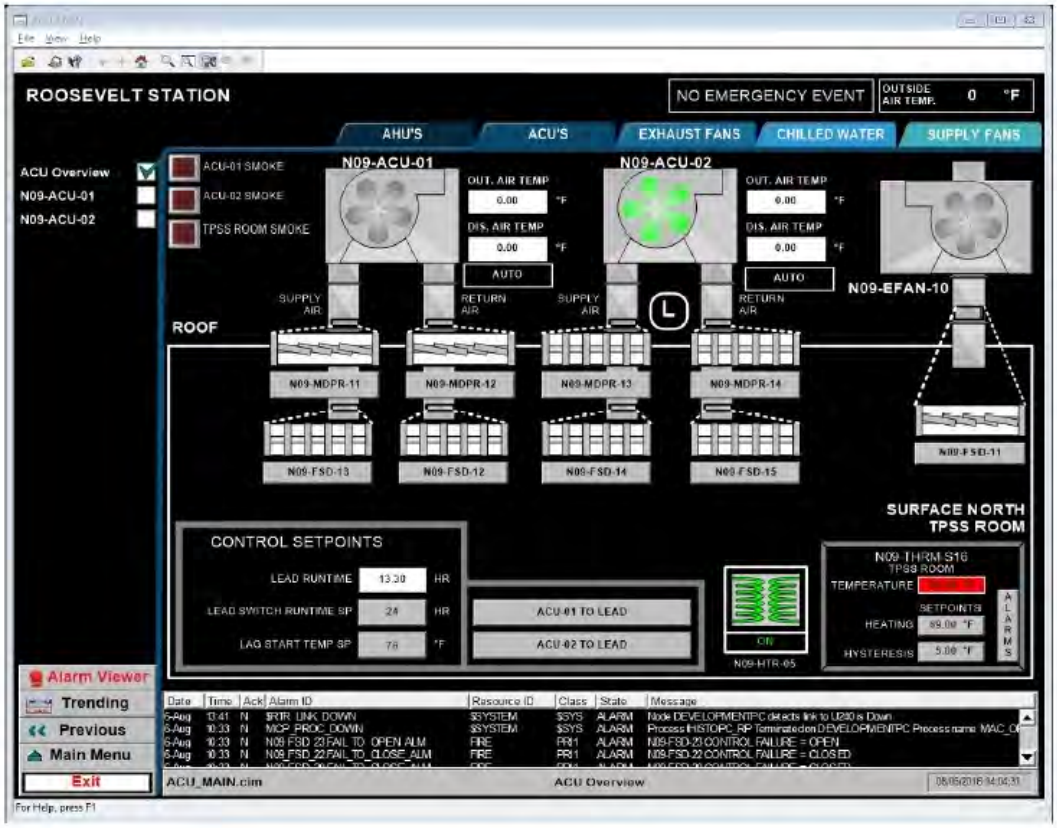

22. Graphics Color Pallette:
    A. BMS
        - RUNNNING / ON / OPEN
        - CLOSED / ALARM
        - IN TRANSITION
        - CAUTION
        - COMMAND STATE = 1
        - STOPPED / OFF

    B. EVS:
        - ON / OPEN /EVACUATION DIRECTION
        - ALARM / EMERGENCY / CLOSED
        - EXHAUST (FWD RUN) / INTRANSITION
        - CAUTION
        - SUPPLY (REV RUN) / VENTILATION
        - STOPPED / OFF

23. Runtimes: Display Equipment runtimes.
24. Pop-ups: Equipment with control shall have pop-up based on the control description, for more details co-ordinate with ST Engineer.

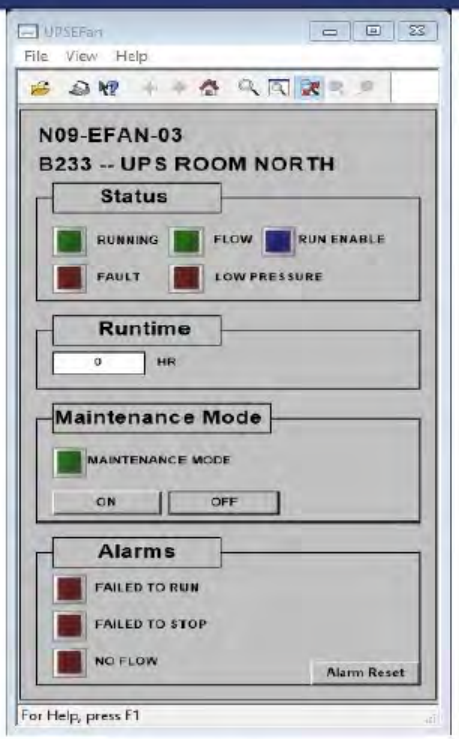

25. ACU Overview Screen and General HVAC:
    a. Graphic thermostats that do not change or provide function, remove graphic and rely upon a labeled number-field only.
    b. Stairwell pressurization to be indicated by a labeled number-field only without the DPT graphic
    c. All control panel insets shall be black background with a grey frame/outline.
    d. All HVAC related buttons shall have a small bevel and grey background.
    e. Place equipment identification (i.e. ACU-01) under the piece of equipment.
    f. Place duct-smoke alarms in upper left for all screens, re-size equipment as appropriate.
    g. Static graphics to be in grey
    h. Located the instrument live information under the graphics symbol
    i. Indicate HOA status under the equipment identifier.
    j. Use SCADA Auto mode and SCADA Manual mode for SCADA related status.

26. Elevator/Escalators/Pumps Screens
    a. Provide status boxes and indications for all VT, Pump and Bike Locker screens,. Use HVAC pop-up windows as example.

27. Lighting Control Screen

a. Lighting Control override boxes shall match the Fire Override box for commands and status.
b. Revenue status to indicate SCADA Revenue Auto

28. Door Control Screens
    a. DID status boxes shall be black background with grey border and with white text status.
    b. MASTER UNLOCK function shall be located in the navigation area on the left (below any list-style or above main button navigation)

29. BMS Chassis-Architecture Screen
    a. On PLC I/O check list description shall be dynamically populated based tag name description. (see page BMS002-slot 3)
    b. All network connections Green for normal and Red for alarm or fault.

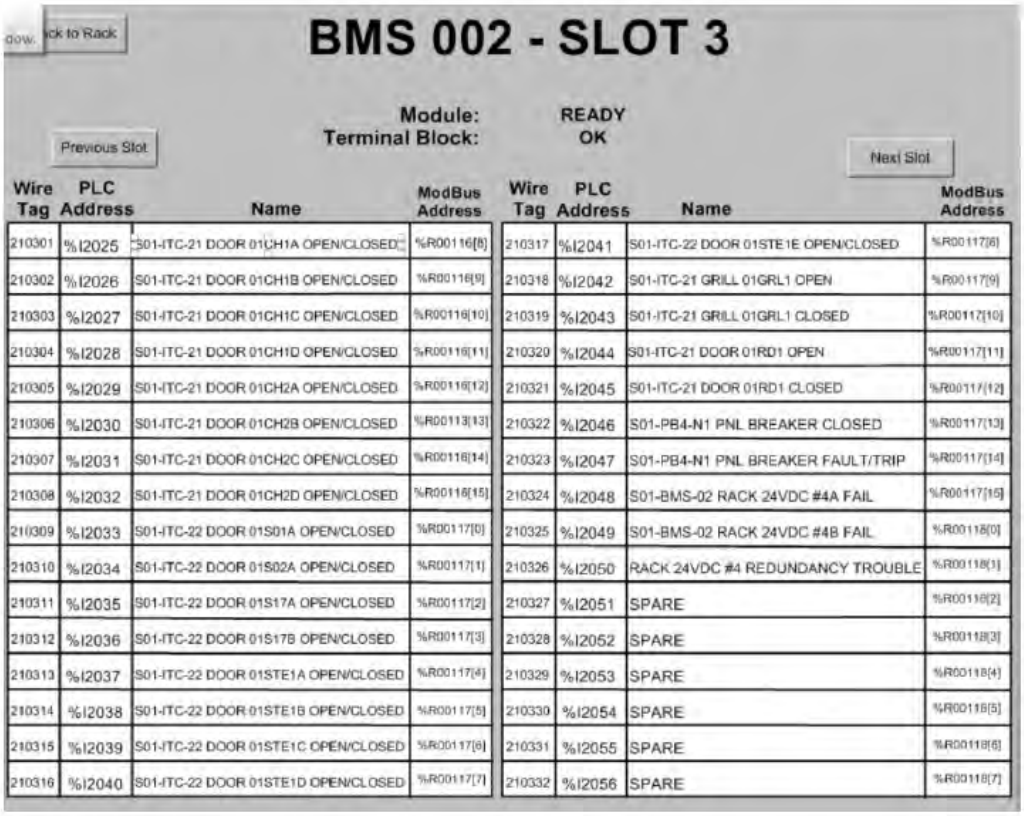

BMS 002 - SLOT 3

Module: READY
Terminal Block: OK

Previous Slot | Next Slot

Wire Tag	PLC Address	Name	ModBus Address	Wire Tag	PLC Address	Name	ModBus Address
210301	%I2025	S01-ITC-21 DOOR 01CH1A OPEN/CLOSED	%R00116[8]	210317	%I2041	S01-ITC-22 DOOR 01STE1E OPEN/CLOSED	%R00117[8]
210302	%I2026	S01-ITC-21 DOOR 01CH1B OPEN/CLOSED	%R00116[9]	210318	%I2042	S01-ITC-21 GRILL 01GRL1 OPEN	%R00117[9]
210303	%I2027	S01-ITC-21 DOOR 01CH1C OPEN/CLOSED	%R00116[10]	210319	%I2043	S01-ITC-21 GRILL 01GRL1 CLOSED	%R00117[10]
210304	%I2028	S01-ITC-21 DOOR 01CH1D OPEN/CLOSED	%R00116[11]	210320	%I2044	S01-ITC-21 DOOR 01RD1 OPEN	%R00117[11]
210305	%I2029	S01-ITC-21 DOOR 01CH2A OPEN/CLOSED	%R00116[12]	210321	%I2045	S01-ITC-21 DOOR 01RD1 CLOSED	%R00117[12]
210306	%I2030	S01-ITC-21 DOOR 01CH2B OPEN/CLOSED	%R00113[13]	210322	%I2046	S01-PB4-N1 PNL BREAKER CLOSED	%R00117[13]
210307	%I2031	S01-ITC-21 DOOR 01CH2C OPEN/CLOSED	%R00116[14]	210323	%I2047	S01-PB4-N1 PNL BREAKER FAULT/TRIP	%R00117[14]
210308	%I2032	S01-ITC-21 DOOR 01CH2D OPEN/CLOSED	%R00116[15]	210324	%I2048	S01-BMS-02 RACK 24VDC #4A FAIL	%R00117[15]
210309	%I2033	S01-ITC-22 DOOR 01S01A OPEN/CLOSED	%R00117[0]	210325	%I2049	S01-BMS-02 RACK 24VDC #4B FAIL	%R00118[0]
210310	%I2034	S01-ITC-22 DOOR 01S02A OPEN/CLOSED	%R00117[1]	210326	%I2050	RACK 24VDC #4 REDUNDANCY TROUBLE	%R00118[1]
210311	%I2035	S01-ITC-22 DOOR 01S17A OPEN/CLOSED	%R00117[2]	210327	%I2051	SPARE	%R00118[2]
210312	%I2036	S01-ITC-22 DOOR 01S17B OPEN/CLOSED	%R00117[3]	210328	%I2052	SPARE	%R00118[3]
210313	%I2037	S01-ITC-22 DOOR 01STE1A OPEN/CLOSED	%R00117[4]	210329	%I2053	SPARE	%R00118[4]
210314	%I2038	S01-ITC-22 DOOR 01STE1B OPEN/CLOSED	%R00117[5]	210330	%I2054	SPARE	%R00118[5]
210315	%I2039	S01-ITC-22 DOOR 01STE1C OPEN/CLOSED	%R00117[6]	210331	%I2055	SPARE	%R00118[6]
210316	%I2040	S01-ITC-22 DOOR 01STE1D OPEN/CLOSED	%R00117[7]	210332	%I2056	SPARE	%R00118[7]

30. Power Screen

a. Power Supply indications and commands to match the Fire Override box for commands and status.
b. Color Scheme:
   i. Symbol: Red is alarm, Yellow is unacknowledged state and Green is normal
   ii. Wire: Red is energized, Grey no power, Yellow is Alarm state.

31. UPS Screen
   a. In labeling, abbreviate Room North to RM North
   b. For consistency with direction above, change yellow power lines to grey as it is not dynamic.

HISTORIAN CONFIGURATION AND TRENDING

Topic	Notes
Centralized Historian	Develop FCS for integration into centralized historian.
Tag Naming	Same standard as HMI and PLC
Datastores	Set up one BMS datastore per station and one EVS datastore per tunnel station. Ensure each station's local configuration supports.
Digital I/O	For BMS and EVS, historically log on change of state of status.
Analog I/O	Historically log the following BMS categories: • Temperature or thermostat AI every five minutes • VFD AI/AO every fifteen seconds when active • Photocell AI every five minutes Historically log the following EVS categories upon initiation: • Vibration continuously. • Winding temperatures every five seconds • Motor current every five seconds

Alarming	For BMS and EVS, historically log all alarms including acknowledgments.
Event	For BMS and EVS, historically log all status including start/stop, open/close, etc
Storage	Storage must accommodate a minimum of 5 years' worth of data. This is required locally until we change to a centralized historian.
Historian tools	Excel plug in and the web tool.

TRENDING:

1. Historical Trend: Trend all Analogs from project based historical database.
2. Real Time Trend: Trend all Analogs in real-time.
3. Use screen template to build trend screen with Alarm and screen info bar as shown above.
4. Customize trending may be needed during commissioning, co-ordinate with ST DECM and ST OT.

SOFTWARE VERSION CONTROL

a. ME 9.5 is being used to program NGLE's FCS, so this will be the new standard for updating ULINK and SLINK. CLINK will be different (TBD).
b. Cimplicity 9.5 is being implemented with NGLE and will be new standard for updating ULINK and SLINK.
c. GE iHistorian implemented with NGLE will be version 7.0. ULINK/SLINK are currently version 5.5.133.0.
d. Confirm software version details with ST OT before starting on the station programming.

IMPORTANT CONSIDERATIONS

1. Hardware & Software compatibility and consistency with the existing LINK system
2. Configuration of station/local networks
   a. Isolated I/O networks and HMI network to be on ST TCN network.
   b. Use Profinet for I/O network (PLCs to RIO) with ring configuration.
3. Bringing ULINK/SLINK into the fold as a future project.

EXHIBIT B
SECTION 25 60 00
BMS HMI DISPLAY EXAMPLES

ACU OVERVIEW

ACU 1

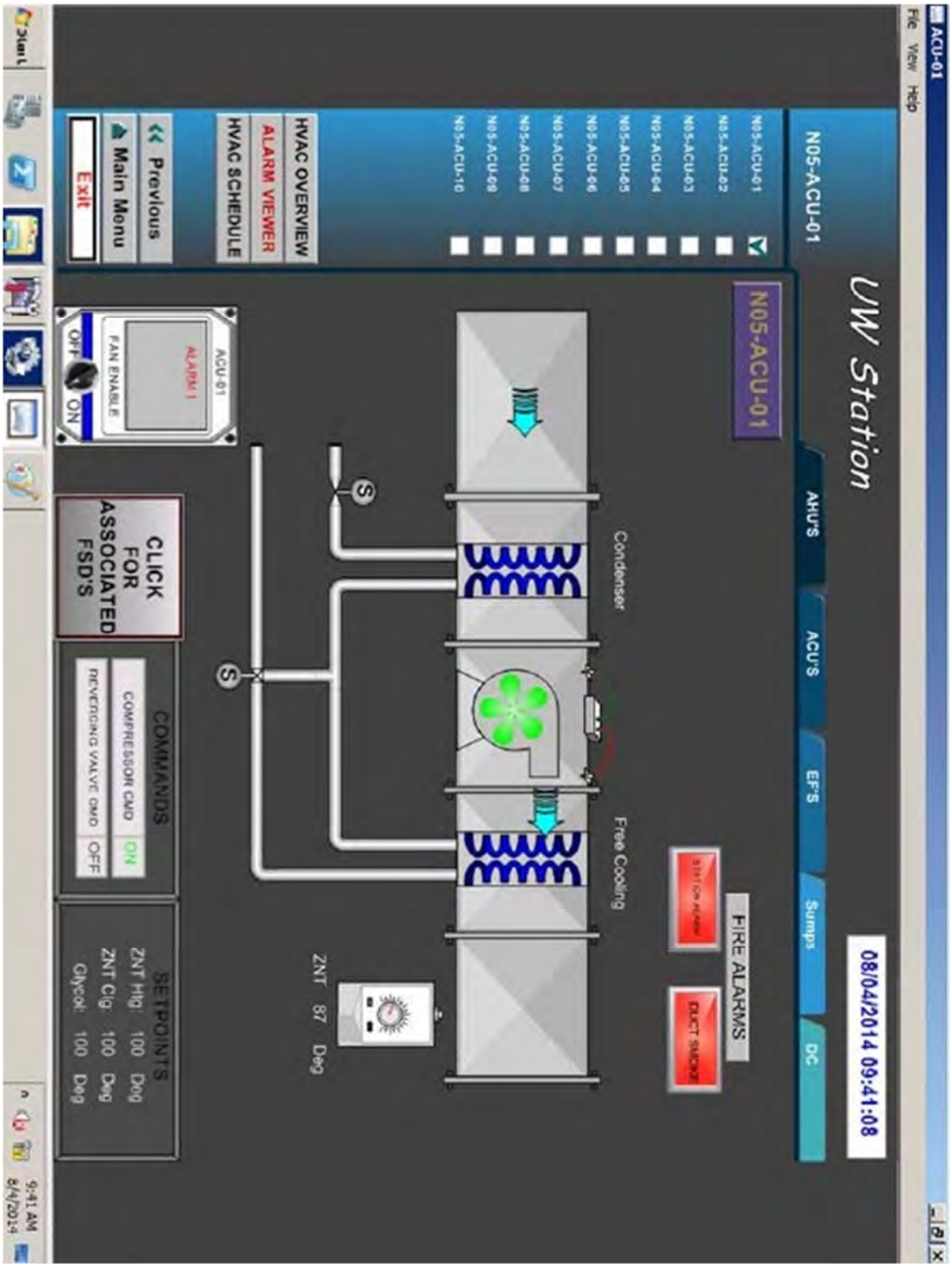
ACU-01
File View Help
UW Station
AHU'S
ACU'S
EF'S
Sumps
DC
08/04/2014 09:41:08
N05-ACU-01
N05-ACU-01
N05-ACU-02
N05-ACU-03
N05-ACU-04
N05-ACU-05
N05-ACU-06
N05-ACU-07
N05-ACU-08
N05-ACU-09
N05-ACU-10
N05-ACU-01
FIRE ALARMS
Condenser
Free Cooling
ZNT 87 Deg
HVAC OVERVIEW
ALARM VIEWER
HVAC SCHEDULE
Previous
Main Menu
Exit
ACU-01
ALARM 1
FAN ENABLE
OFF
ON
CLICK FOR ASSOCIATED FSD'S
COMMANDS
COMPRESSOR CMD ON
REVERSING VALVE CMD OFF
SETPOINTS
ZNT Htg: 100 Deg
ZNT Clg: 100 Deg
Glycol: 100 Deg
Start
9:41 AM
8/4/2014

AHU OVERVIEW

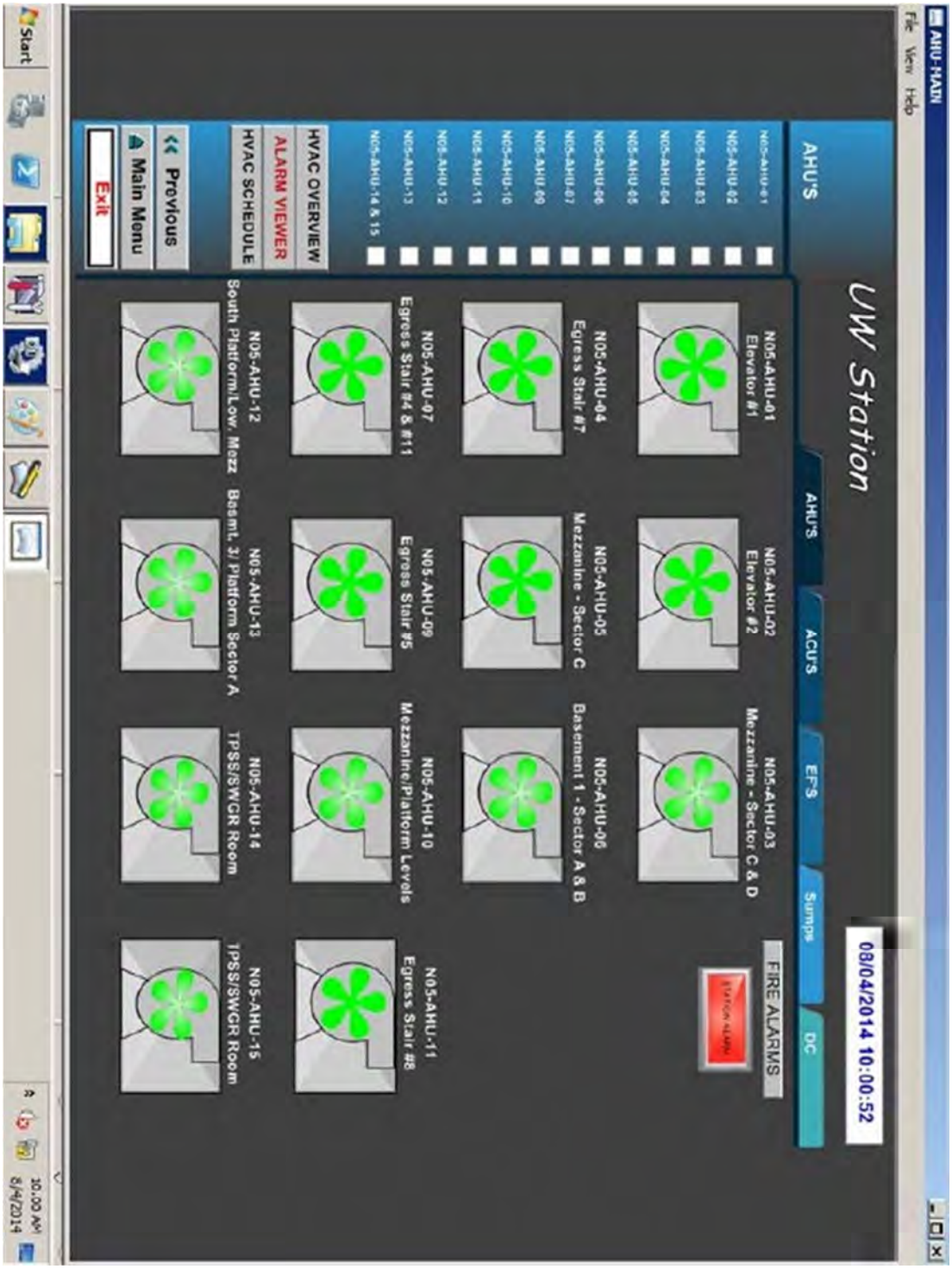

AHU-1

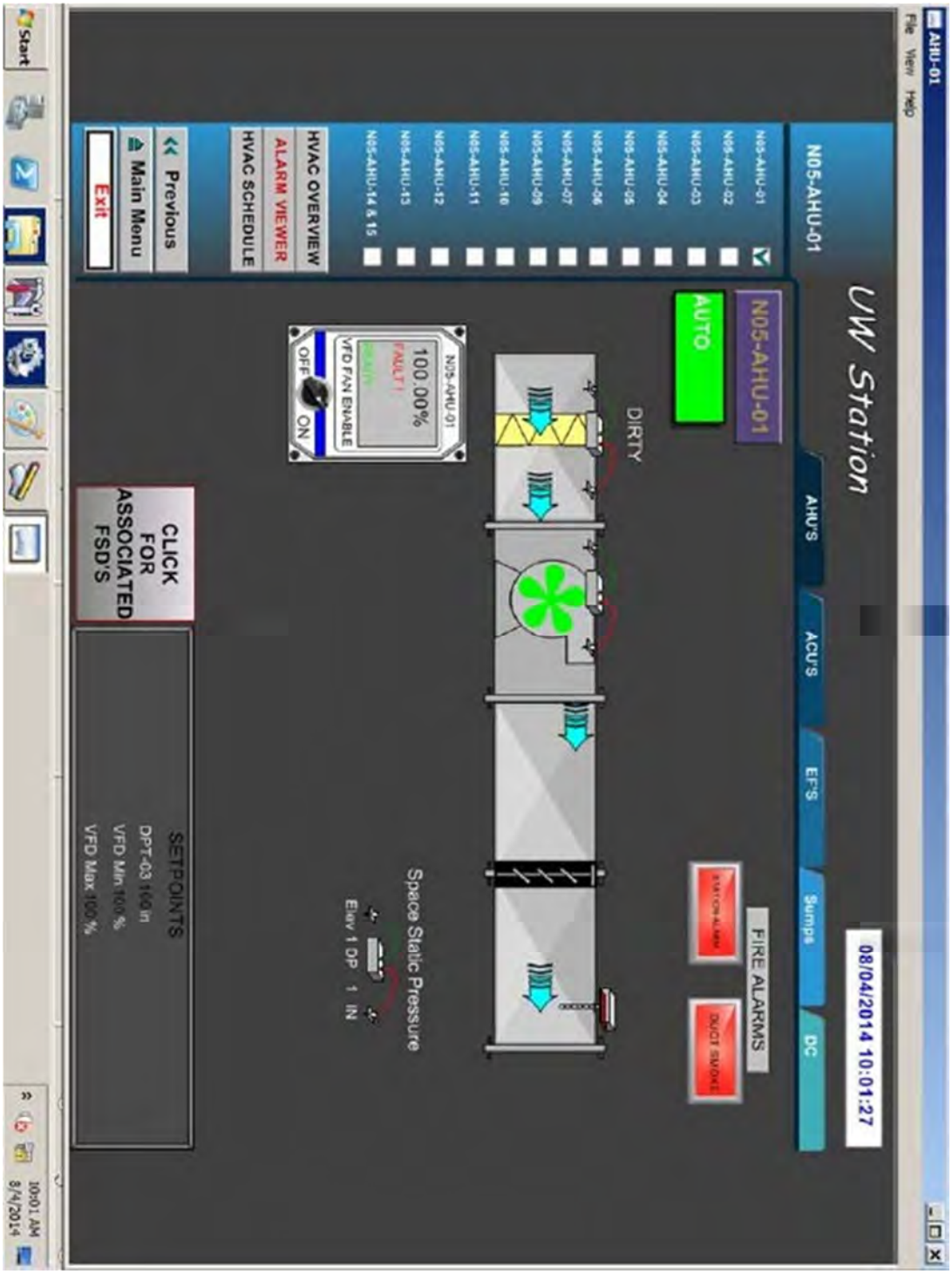
AHU-01
File View Help
UW Station
AHU'S
ACU'S
EF'S
Sumps
DC
08/04/2014 10:01:27
N05-AHU-01
N05-AHU-01
N05-AHU-02
N05-AHU-03
N05-AHU-04
N05-AHU-05
N05-AHU-06
N05-AHU-07
N05-AHU-09
N05-AHU-10
N05-AHU-11
N05-AHU-12
N05-AHU-13
N05-AHU-14 & 15
HVAC OVERVIEW
ALARM VIEWER
HVAC SCHEDULE
Previous
Main Menu
Exit
N05-AHU-01
AUTO
DIRTY
N05-AHU-01
100.00%
FAULT!
VFD FAN ENABLE
OFF
ON
CLICK FOR ASSOCIATED FSD'S
FIRE ALARMS
DUCT SMOKE
Space Static Pressure
Elev 1 DP 1 IN
SETPOINTS
DPT-03 1.00 in
VFD Min 100 %
VFD Max 100 %
Start
10:01 AM
8/4/2014

AHU OVERRIDE – CONTROL PANEL

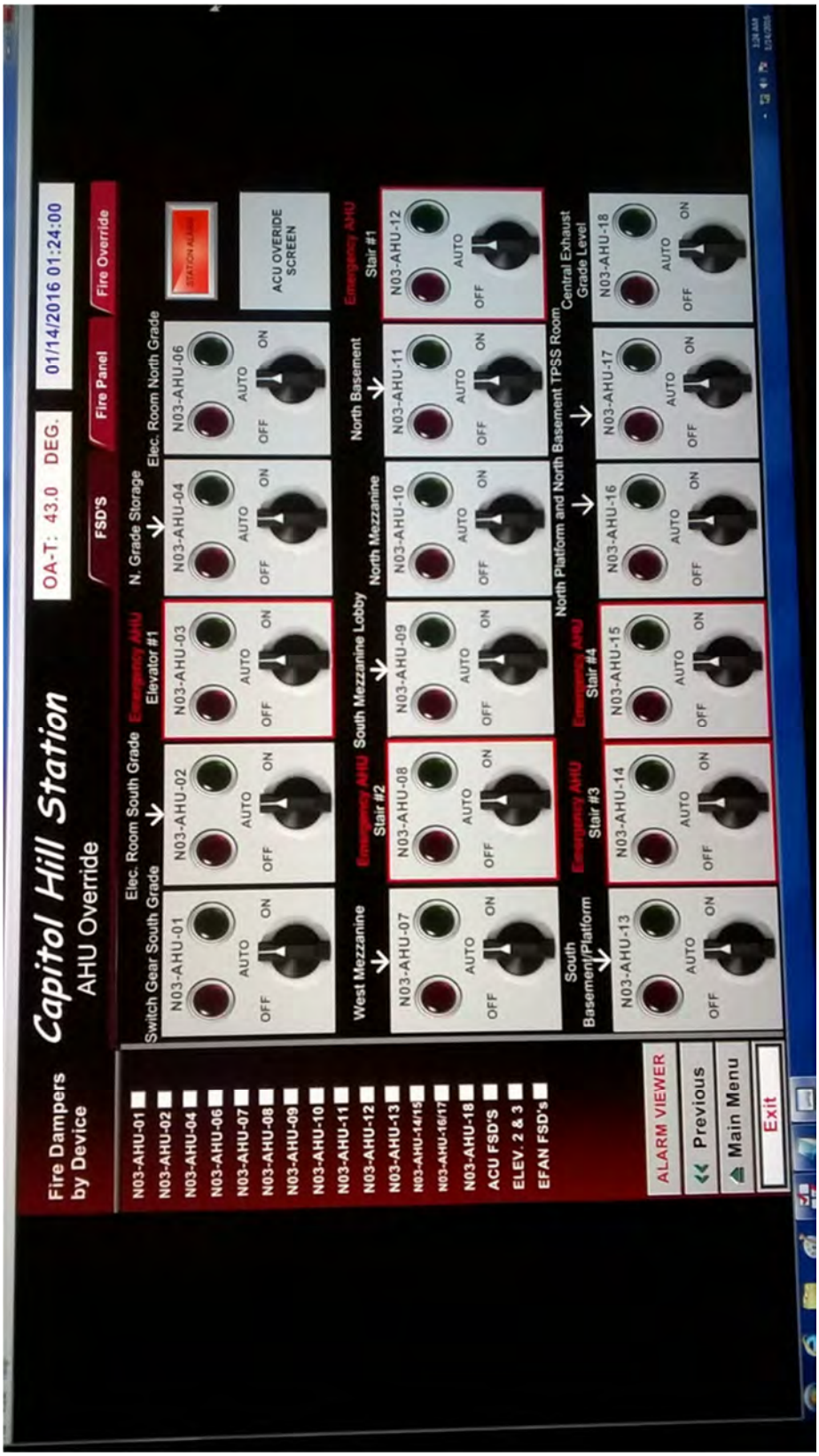

NO3 – FIRE PANEL – DISPLAY 1

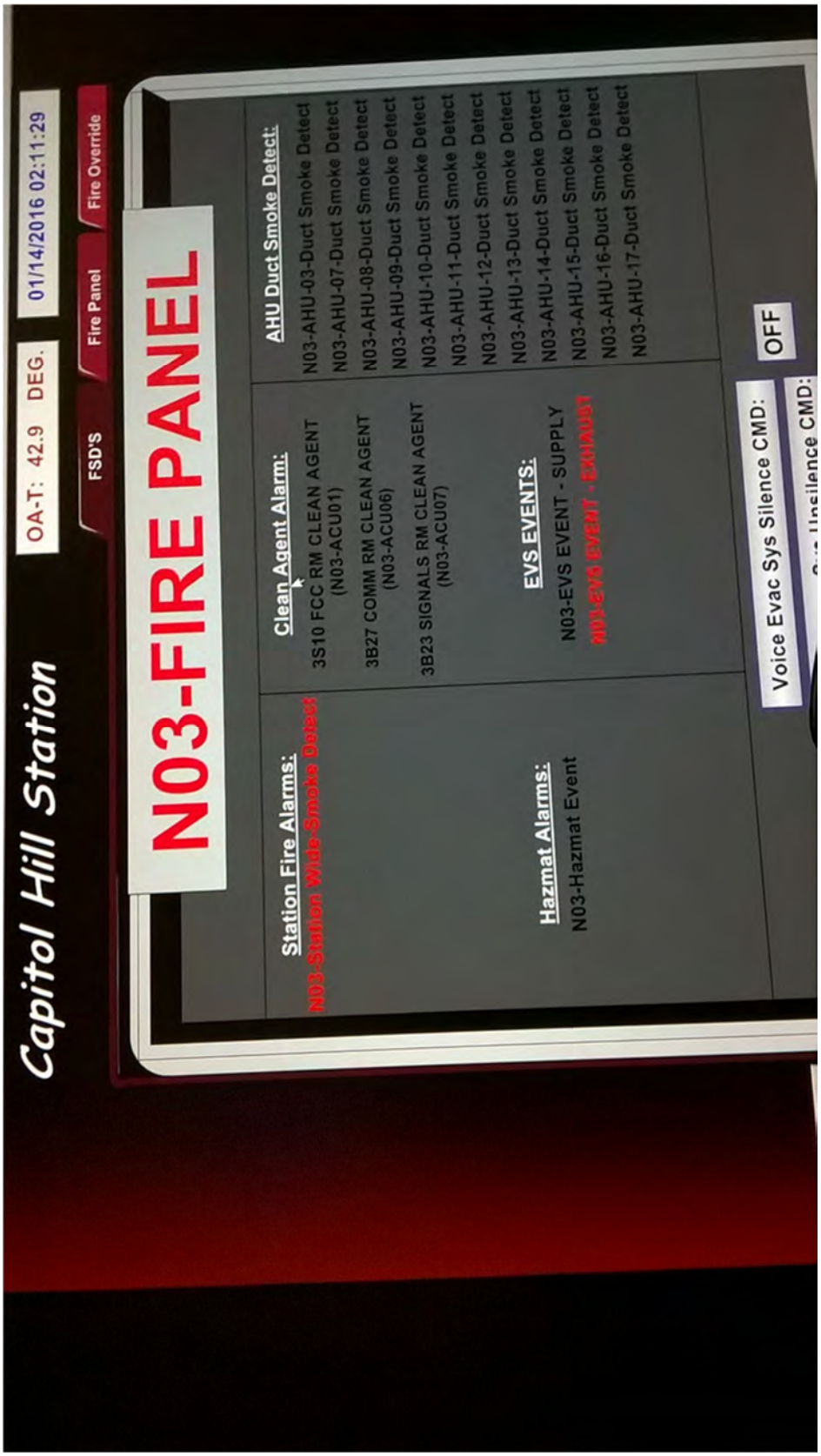

NO3 – FIRE PANEL – DISPLAY 2

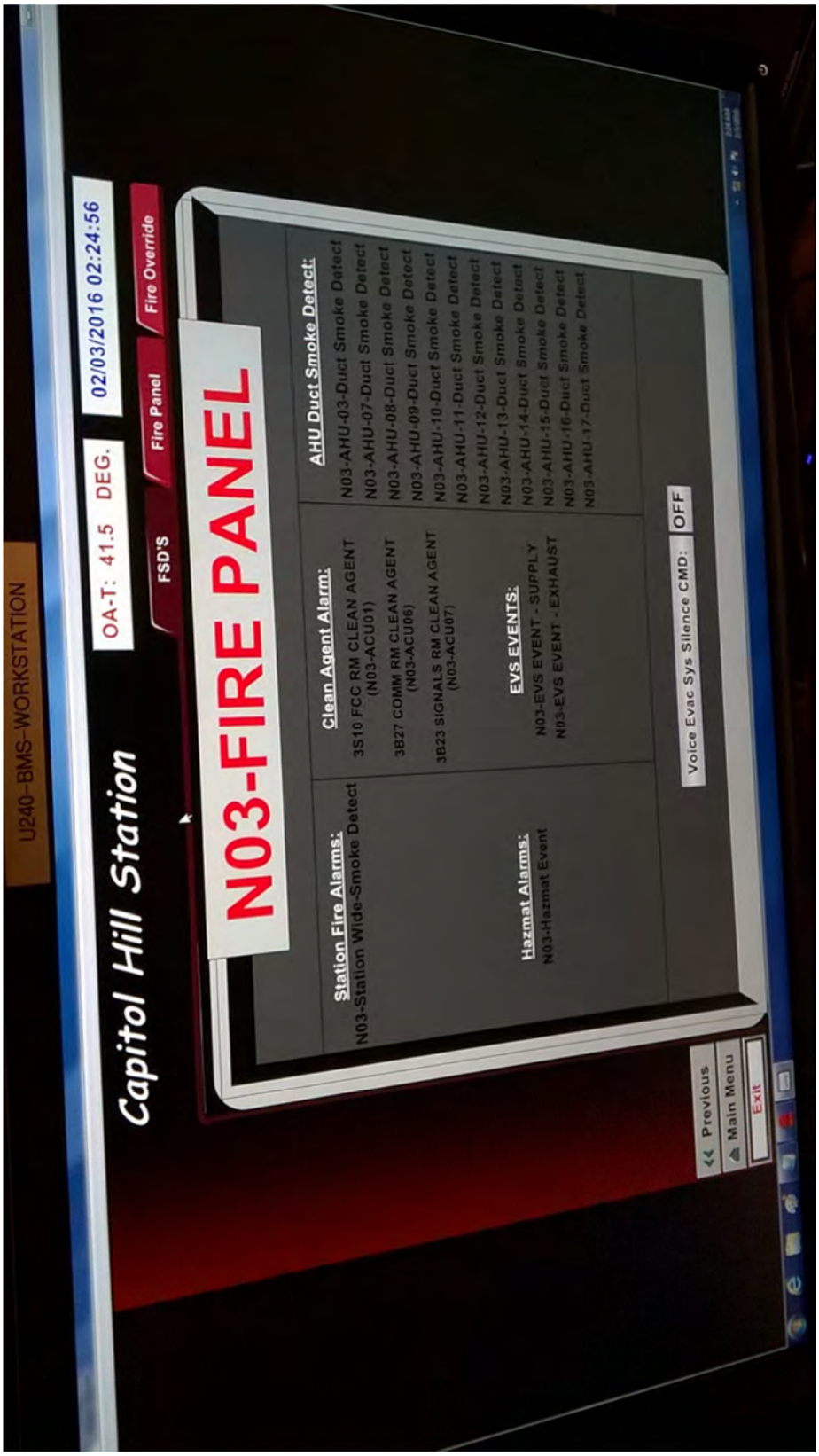

EXHIBIT C
SECTION 25 60 00
ROCKWELL COLLINS ALARMS MESSAGE CONFIGURATION

GENERAL

The current BMS and EVS systems each use the same Rockwell Collins Alarm and Event processing kernel to generate alarm messages. The alarm and event processing provided by the Contractor shall follow the same configuration.

The alarm characteristics and priority for each alarm condition is specific to each system and is defined in the database of each system. Each alarm condition is configured with up to four (4) alarm priorities that define color, whether and acknowledgement is required, whether the alarm is defined as a major alarm or minor alarm.

- Priority 1 alarms major alarms, are reported visually and audibly at the Workstation, display red in color and require acknowledgement. Audible alarm shall be continuous until acknowledged.
- Priority 2 alarms major alarms, are reported visually display red in color and require acknowledgement.
- Priority 3 alarms minor alarms, are reported visually display yellow in color and require acknowledgement.
- Priority 4 alarms minor alarms, are reported visually display yellow in color and do not require acknowledgement.

In general, when the alarm is caused by a device with a graphical symbol on a display, the symbol will flash until acknowledged. It is planned that the TCS, BMS, and EVS alarms priority scheme shall follow the existing system alarm priority scheme as provided by Sound Transit.

BMS, and EVS event processing uses templates to create alarm text. The data specific to each alarm is substituted into the template at the time the alarm message is generated. In the follow examples, all items that are in red are example substitutions. The alarm mockups show how a subset of the alarm messages will be displayed in the workstation alarm summaries.

EXAMPLES PROVIDED ON NEXT PAGE

EXAMPLES

INITIALIZATION COMPLETE ON EVS1 IN GROUP EVS

⇒ Indicates that one of the EVS servers (EVS1) has completed its initialization.

SYSTEM FAILOVER INITIATED ON WKST1 IN GROUP BMS

⇒ Indicates that the user at workstation1 has initiated a server failover in the BMS group.

SYSTEM FAILOVER READY: TCS1 IS PRIMARY AND TCS2 IS BACKUP IN GROUP TCS

⇒ Indicates that there is a functional primary server (TCS1) and hot standby backup server (TCS2). The TCS system is in a state where one server can fail and not cause loss of operational status.

REJECTED LOGON BY USER SUPERV CONSOLE WKST1

⇒ User SUPERV has attempted to login to console WKST1 and failed to enter the correct password.

DEVICE1 CURRENT STATE = OPEN

⇒ DEVICE1 is in the state OPEN.

DEVICE1 UNCOMMANDED CHANGE = OPEN

⇒ DEVICE1 has changed state and is now OPEN. This device is not expected to change state on its own and was not commanded to change state.

⇒ The priority of this alarm will be set to the minimum priority (event) for all systems.

DEVICE1 CONTROL FAILURE = CLOSE

⇒ DEVICE1 was commanded to change state to CLOSE. The device status did not change to CLOSE after the (configurable) timeout time. The device is considered to have failed.

SYSTEM_ITEM IS DOWN ON SERVER1

⇒ The device, processor or application SYSTEM_ITEM has been detected to be in the DOWN state by the system on SERVER1. This alarm is used to track the state of system or system critical items.

NETWORK ETHERNET1 IS DOWN ON SERVER1

⇒ The network device named ETHERNET1 is in the state DOWN on the server named SERVER1.

This alarm is used to track network device status.

B.3 TCS Alarm Mockups

Time	Date	Location	Equipment Description	Point Description	Device		State	[FCT]	[GEO]
17:18:01.475D	02/02/13	STADIUM STATION	SIGNAL	RED SIGNAL OVERRUN	12N	CURRENT STATE =	ALARM	TP	S
17:18:01.475D	02/02/13	PINE STREET	COMPUTER	HARDWARE FAULT	PLC	CURRENT STATE =	ALARM	TP	P
17:05:20.457D	02/03/13	SYSTEM	TMC PRO RAIL IS DOWN ON TCSAIM1						
17:18:01.475D	02/03/13	STADIUM STATION	GATE CROSSING	ALARM	80Y	CURRENT STATE =	ALARM	TP	S
17:18:01.475D	02/03/13	HENDERSON	TRACK SWITCH		3AB	UNCOMMANDED CHANGE =	REVERSE	TP	H
17:18:01.475D	02/03/13	STADIUM STATION	GATE CROSSING	BYPASS	80L	CURRENT STATE =	YES	TP	S
17:18:01.475D	02/03/13	INTERNATIONAL DISTRICT SUBSTATION	DC FEEDER BREAKER	POSITION	703	CURRENT STATE =	OPEN	TP	I
17:18:01.475D	02/03/13	PINE STREET SUBSTATION	DC FEEDER BREAKER	POSITION	701	CURRENT STATE =	CLOSED	TP	P
17:05:20.087D	02/03/13	SYSTEM	FAILOVER READY: TCSAIM1 IS PRIMARY AND TCSAIM2 IS BACKUP IN GROUP TCS						

B.4 EVS Alarm Mockups

Time	Date	Location	Equipment Description	Point Description	Device		State	[FCT]	[GEO]
17:18:01.475D	02/03/13	CONVENTION PLACE STATION	DELUGE VALVE	OPEN	201	CURRENT STATE =	YES	TP	V
17:18:01.475D	02/03/13	SYSTEM	REJECTED LOGON BY USER SUPERV CONSOLE EVSWKST1						
17:18:01.475D	02/03/13	WESTLAKE STATION	DELUGE VALVE	OPEN	205	CONTROL FAILURE =	OPEN	TP	V
17:18:01.475D	02/03/13	PIONEER SQUARE STATION	HEAT DETECTOR	FIRE	195	CURRENT STATE =	YES	TP	Q
17:18:01.475D	02/03/13	SYSTEM	INITIALIZATION COMPLETE ON EVSAIM1 IN GROUP EVS						

B.5 BMS Alarm Mockups

Time	Date	Location	Equipment Description	Point Description	Device		State	[FCT]	[GEO]
16:45:42.617D	02/03/13	SYSTEM	NETWORK ETHERNET1 1 IS UP ON BMSAIM1						
17:18:01.475D	02/03/13	WESTLAKE STATION	BREAKER	GROUND FAULT	A14	CURRENT STATE =	ALARM	TP	W
17:18:01.475D	02/03/13	CONVENTION PLACE STATION	ACCESS CONTROL PANEL	TROUBLE	01	CURRENT STATE =	ALARM	TP	V
17:18:01.475D	02/03/13	CONVENTION PLACE STATION	DSTT ELEVATOR	MACHINE ROOM TEMP	01	CURRENT STATE =	ALARM	TP	V
17:18:01.475D	02/03/13	WESTLAKE STATION	EXHAUST FAN	FAN DISCONNECT	301	CURRENT STATE =	OPEN	TP	W
17:18:01.475D	02/03/13	CONVENTION PLACE STATION	VMS SIGN	FAULT	01	CURRENT STATE =	ALARM	TP	V
17:18:01.475D	02/03/13	UNIVERSITY STREET STATION	TICKET VENDING MACHINE	INTRUSION	03	CURRENT STATE =	ALARM	TP	U
17:18:01.475D	02/03/13	STADIUM STATION	TICKET VENDING MACHINE	MAINTENANCE REQUIRED	02	CURRENT STATE =	YES	TP	S
16:45:42.132D	02/03/13	SYSTEM	SYSTEM FAILOVER INITIATED ON BMSWKST1 IN GROUP BMS						

END OF EXHIBITS

SECTION 26 05 00

COMMON WORK RESULTS FOR ELECTRICAL

PART 1 - GENERAL

1.01 SUMMARY

A. Section includes:

1. Requirements for general electrical requirements that apply to other specification sections.

1.02 REFERENCES

A. This Section incorporates by reference the latest Authority Having Jurisdiction (AHJ) approved revisions of the following documents:

1. Institute of Electrical and Electronics Engineers (IEEE):

a. IEEE C2 National Electrical Safety Code (NESC).

b. IEEE 141 – Recommended Practice for Electric Power Distribution and Coordination of Industrial and Commercial Power Systems.

c. IEEE 242 – Recommended Practice for Protection and Coordination of Industrial and Commercial Power Systems.

d. IEEE 399 – Recommended Practice for Industrial and Commercial Power System Analysis.

e. IEEE 241 – Recommended Practice for Electric Power Systems in Commercial Buildings.

f. IEEE 1015 – Recommended Practice for Applying Low-Voltage Circuit Breakers Used in Industrial and Commercial Power Systems.

g. IEEE 1584 -Guide for Performing Arc-Flash Hazard Calculations.

2. National Electrical Contractors Association (NECA):

a. NECA NEIS 1 Standard Practice of Good Workmanship in Electrical Construction.

3. National Fire Protection Association (NFPA):

a. NFPA 70 National Electrical Code.

b. NFPA 70E Standard for Electrical Safety in the Workplace.

c. NFPA 110 Standard for Emergency and Standby Power Systems.

d. NFPA 130 Standard for Fixed Guideway Transit and Passenger Rail Systems.

4. State of Washington – Revised Code of Washington (RCW):

   a. 19.27 RCW Washington State Building Code.

   b. 19.28 RCW Electricians and Electrical Installations.

5. State of Washington – Washington Administrative Code (WAC):

   a. 51-50 WAC State Building Code Adoption and Amendments of the International Building Code.

   b. 296-45 WAC Safety Standards for Electrical Workers.

   c. 296-46B WAC Electrical Safety Standards, Administration, and Installation.

6. Local City and AHJ Electrical Code.

7. Local City and AHJ Building Code.

1.03 PERFORMANCE REQUIREMENTS

A. Seismic Design and Bracing:

1. Equipment provided shall meet seismic requirements specified in the AHJ-approved building code. Provide suitable bracing and anchorage and submit calculations performed and sealed by a structural engineer registered in Washington.

1.04 SUBMITTALS

A. Submit:

1. List of Materials: Submit a list of materials and equipment proposed for use. Give name of manufacturer, brand name, and catalog number of each item. Submit the list complete at one time, with items arranged and identified in numerical sequence by Specifications Section and Article numbers.

2. Seismic Bracing and Anchorage Calculations.

3. Compliance with Applicable Standards:

   a. Where equipment or materials are specified to conform to the standards of organizations such as ANSI, ASTM, IEEE, and NEMA, submit evidence of such conformance for review and record purposes.

   b. The label or listing of the specified agency will be acceptable evidence.

   c. Instead of the label or listing, the Contractor may submit a written certificate from an approved, nationally recognized testing organization, adequately equipped and competent to perform such services, stating that the items have been tested and that the units conform to the specified standard.

   d. Submit evidence of compliance to seismic safety requirements of the Washington State Building Code, local amendments, and the National Electrical Code.

4. Factory Test and Inspection Certification.

5. Shop Drawings: Submit shop drawings showing equipment layouts and fabricated work being provided under these Specifications. Submit such drawings before rough-in work, fabrication, and within ample time to prevent delays in the Work. Include electrical diagrams for equipment and equipment installation.

6. Field Test Reports: Submit certified field test reports of field tests, verifying compliance of equipment and systems with Specification requirements.

7. Operation and Maintenance Manuals: Submit operation and maintenance instructions and data for equipment provided under this Division as required by the contract. Include recommended maintenance materials and spare parts list for installed equipment.

8. Sound Transit Cover Fasteners Keys: Submit ten key bits as described in Article 2.01.B.3, in this specification.

B. Transmit:

1. Qualifications of professional engineer

1.05 QUALITY ASSURANCE

A. Qualifications: Ensure workers performing work meet the qualification and licensing requirements of Chapter 19.28 RCW.

B. Perform work in compliance with the following industry standards and regulations if applicable:

1. National Fire Protection Association:

a. NFPA 70 National Electrical Code.

b. NFPA 70E Standard for Electrical Safety in the Workplace.

c. NFPA 130 Standard for Fixed Guideway Transit and Passenger Rail Systems.

2. Institute of Electrical and Electronics Engineers, Inc. (IEEE):

a. IEEE 141 – Recommended Practice for Electric Power Distribution and Coordination of Industrial and Commercial Power Systems.

b. IEEE 242 – Recommended Practice for Protection and Coordination of Industrial and Commercial Power Systems.

c. IEEE 399 – Recommended Practice for Industrial and Commercial Power System Analysis.

d. IEEE 241 – Recommended Practice for Electric Power Systems in Commercial Buildings.

e. IEEE 1015 – Recommended Practice for Applying Low-Voltage Circuit Breakers Used in Industrial and Commercial Power Systems.

f. IEEE 1584 -Guide for Performing Arc-Flash Hazard Calculations.

g. IEEE C2 National Electrical Safety Code.

3. NECA NEIS 1, Standard Practice of Good Workmanship in Electrical Construction.

4. State of Washington Business Regulations and Administrative Codes.

5. Relevant amendments to Washington State regulations and codes adopted by local jurisdictions.

PART 2 - PRODUCTS

2.01 MATERIALS

A. General:

1. Furnish materials and equipment of design, sizes, UL listing (where UL standards exist), and ratings as indicated- suitable for the intended purpose.

2. Furnish materials and equipment acceptable to the authority having jurisdiction bearing label or classification listing of a nationally-recognized testing laboratory where product labeling or listing is available.

3. Methods of fabrication, assembly, and installation shall comply with specified Standards.

4. Provide products that are free from defects, which may impair performance, durability, or appearance.

B. Switches:

1. Provide ac, tumbler-type toggle switches conforming to minimum requirements of FS W-S-896, heavy-duty general use type.

2. Provide switches that operate in any position and are fully enclosed with entire body and cover of molded phenolic, urea, or melamine. Do not use fiber, paper, or similar flammable insulating material for body or cover.

3. Equip switches with metal mounting yoke with plaster ears, insulated from the mechanism and fastened to the switch body by bolts, screws, or other substantial means.

4. Provide the section of the yoke normally intended to bear on the surface outside the box with a minimum overall dimension of 3/4 inch, measured at right angles to the longitudinal axis of the yoke.

5. Use switch contacts of silver or silver alloy.

6. Use switches that are back or side wired with terminals of screw type or combination screw-clamp type.

7. Use terminal screws No. 8 or larger, captive or terminal type.

8. For use on lighting circuits, provide switches that are fully-rated for 20 A at 120 V or 277 V. Switches shall be gray color or as selected by Resident Engineer.

9. For control of resistive loads, switches may be snap-type as specified herein, of the proper rating up to 30 A at 120 - 277 V.

10. Provide 120 - 277 Vac snap switches capable of withstanding tests as outlined in FS W-S-896. If requested by Resident Engineer, submit evidence that the types of switches proposed have satisfactorily withstood these tests.

C. Receptacles:

1. Receptacle Standards: Ensure connector and outlet receptacles conform to FS W-C-596, heavy-duty general use type and NEMA WD6.

2. Convenience Receptacles:

a. Provide receptacles with fire-resistant, nonabsorptive, hot-molded phenolic composition bodies and bases and with metal plaster ears integral with supporting member. Color shall be as indicated in the Contract Documents.

b. Use receptacles that are 20R configuration, single- or duplex-type as indicated. Use receptacles that are back- and side-wired with screw or combination screw-clamp terminals.

c. For contacts of the receptacles, including the grounding contact, use double-grip bronze type with spring steel backup clips so that both sides of each male prong of the plug will be in firm contact.

3. Locking-Blade Receptacles: NEMA WD 6, configuration subject to approval.

4. GFCI Receptacles:

a. For ground fault circuit interrupter (GFCI) duplex receptacles use 120 V, 60 Hz, 20 A with built-in test and reset buttons and ground fault trip indicator.

b. Ensure they interrupt the circuit within 1/30 second on a 5 mA earth leakage current.

c. Receptacles shall also trip if the receptacle is incorrectly wired or if the ground-fault sensing/tripping unit fails.

d. Provide devices designed for end-of-run installation or with provisions for feeding through to protect other outlets on the circuit. Circuit capacity for feeding through shall be 20 A.

e. Provide receptacles with clamp-type terminals, mounting screws, and instructions.

5. Wallplates:

a. Provide multi-gang plates where required. Segmented wallplates are not acceptable.

b. Finished Area Device Covers: Brushed stainless steel, 0.040-inch thickness.

c. Utility Area Device Covers: Raised, galvanized steel

d. Exterior and Wet Location Cover:

1) NEC-compliant "while-in-use" cover.

2) Heavy-duty, die-cast aluminum, powder coated.

3) Listed for wet locations, rated NEMA 250 Type 3R, with neoprene gasket.

4) Padlockable.

5) Depth: Minimum 3-1/4 inches.

e. Damp Location Cover: Die-cast, copper-free aluminum listed for wet locations with self-closing spring door and rubber gasket.

2.02 SOURCE QUALITY CONTROL

A. Factory Test and Inspection Certification:

1. Where factory tests and inspections for materials and equipment specified in referenced documents are waived, submit certified copies of reports for tests performed on previously manufactured identical materials or equipment within the previous 12 months for review and approval.

2. Accompany test reports by signed statements from the manufacturer certifying that the previously tested material or equipment is physically, mechanically, and electrically identical to that proposed for the Contract. Include wiring and control diagrams.

PART 3 - EXECUTION

3.01 INSTALLATION

A. Install products in accordance with product listings, manufacturer's recommendations, relevant codes and regulations, and standard industry practice for electrical installations.

B. Install electrical materials, equipment, appurtenances, and accessories in locations as indicated, in accordance with NECA NEIS 1, to provide a complete and operable system. Do not weld electrical materials for attachment or support.

C. Provide anchor bolts and anchorage items as required, and field check to ensure proper alignment and location. Provide templates, layout drawings, and supervision at the jobsite to ensure correct placing of anchorage items in concrete. Check embedded items for correctness of location and detail before concrete is placed.

D. Install supporting members, fastenings, framing, hangers, bracing, brackets, straps, bolts, and angles as required to set and connect the work rigidly.

E. Conform to the seismic restraint requirements of the AHJ-approved Building Code and Washington State Building Code.

F. Ensure electrical equipment installed under these Specifications conforms to the AHJ-approved Building Code and the International Building Code Section 1621, Architectural, Mechanical, and Electrical Component Seismic Design Requirements.

G. Control erection tolerance requirements so as to not impair the strength, safety, serviceability, or appearance of the installations.

H. Install switches, receptacles, special purpose outlets, and cover plates complete in accordance with NECA NEIS 1, the National Electrical Code, and local electrical codes.

I. Seal equipment enclosures against dust, whenever dusty conditions are present inside the rooms or outside, during the construction period.

3.02 CONSTRUCTION

A. Wallplate Type Requirements:

1. Public areas: Provide Finished Area device covers.

2. Non-Public areas: Provide Utility Area wallplates in ancillary spaces, mechanical rooms, fan rooms, electrical closets, electrical rooms, traction power substations, and unfinished areas.

3. Special purpose outlets: Provide Finished Area device covers of a design for the particular application.

4. Exterior and wet locations: Provide specified exterior and wet location while-in-use covers.

5. Damp locations: Provide specified damp location covers.

B. Wiring:

1. Provide wiring systems complete as indicated and required for proper service. Provide ample slack wire for motor loops, service connections, and extensions. In outlet or junction boxes provided for installation of equipment by others, insulate and protect ends of wires and cables and install blank covers.

C. Wiring Devices and Wall Plates:

1. Locate wiring devices at heights in accordance with NECA 1, except as otherwise indicated.

2. For exterior and damp locations including passenger stations, mount receptacles in watertight cast metal outlet boxes with threaded hubs or bosses.

3. Provide water-tight, locking-type male plugs protected by a ground-fault circuit interrupter for equipment subject to spray or hose cleaning.

4. Provide GFCI duplex receptacles where indicated.

5. Provide wallplates for each switch, receptacle, and special purpose outlet.

D. Interface With Other Work:

1. Coordinate the Work of this Section with the Work of others, as required to provide a complete and operable electrical installation.

2. Coordinate electrical services and Work with the serving utility company and Sound Transit, as applicable.

3. Coordinate with Work completed or in progress or to be performed under other Sections of these Specifications or by other contractors.

a. Make indicated connections to previously completed work.

b. Where future connections to or extensions of the work are indicated, provide safe and convenient provisions for such future connections and extensions.

END OF SECTION

SECTION 26 05 33

RACEWAY, BOXES, HANGERS AND SUPPORTS FOR ELECTRICAL SYSTEMS

PART 1 - GENERAL

1.01 SUMMARY

A. Section includes:

1. Requirements for furnishing and installing electrical raceways, underground electrical conduits, duct banks and utility structures, and equipment supports including conduit, duct and cable tray, outlet, junction and pull boxes, and electrical and communications distribution cabinets.

B. See Division 33 specifications for requirements for utilities electrical manholes and vaults. See Division 31 specifications for requirements for earthwork trenching and backfill.

1.02 REFERENCES

A. This Section incorporates by reference the latest revision of the following documents:

1. American National Standards Institute (ANSI):

a. ANSI C80.1 Electrical Rigid Steel Conduit (ERSC).

2. ASTM International (ASTM):

a. ASTM C33/C33M Standard Specification for Concrete Aggregates.

b. ASTM A123/A123M Standard Specification for Zinc (Hot-Dip Galvanized) Coatings on Iron and Steel Products.

c. ASTM A153/A153M Standard Specification for Zinc Coating (Hot-Dip) on Iron and Steel Hardware.

d. ASTM D1248 Standard Specification for Polyethylene Plastics Extrusion Materials for Wire and Cable.

e. ASTM D3035 Standard Specification for Polyethylene (PE) Plastic Pipe (DR-PR) Based on Controlled Outside Diameter.

3. National Electrical Contractors Association (NECA):

a. NECA NEIS 1 Standard for Good Workmanship in Electrical Contracting.

4. National Electrical Manufacturers Association (NEMA):

a. ANSI/NEMA FB 1 Fittings, Cast Metal Boxes, and Conduit, Electrical Metallic Tubing, and Cable.

b. NEMA FG 1 Fiberglass Cable Tray Systems.

c. NEMA RN 1 Polyvinyl-Chloride (PVC) Externally Coated Galvanized Rigid Steel Conduit and Intermediate Metal Conduit.

d. NEMA TC 2 Electrical Polyvinyl Chloride (PVC) Conduit.

e. NEMA TC 3 Polyvinyl Chloride (PVC) Fittings for Use with Rigid PVC Conduit and Tubing.

f. NEMA TC 13 Electrical Nonmetallic Tubing (ENT).

g. NEMA TC 14 Reinforced Thermosetting Resin Conduit (RTRC) and Fittings.

h. NEMA VE 1 Metal Cable Tray Systems.

i. NEMA 250 Enclosures for Electrical Equipment (1000 Volts Maximum).

5. National Fire Protection Association (NFPA):

a. NFPA 70 National Electrical Code.

b. NFPA 130 Standard for Fixed Guideway Transit and Passenger Rail Systems.

6. Underwriters Laboratories Standards (UL):

a. BSR/UL 2024 Standard for Signaling, and Communications Raceways and Cable Routing Assemblies.

b. UL 1653 UL Standard for Safety Electrical Nonmetallic Tubbing.

1.03 SUBMITTALS

A. Submit the following:

1. Shop Drawings:

a. Provide shop drawings showing the exact location and arrangement of conduits, cabinets, and pull-boxes installed under this contract.

b. Provide shop drawings for fabrication and installation of precast concrete structures, cast-in-place concrete structures, and concrete-encased underground ductwork, including the following:

1) Excavation and shoring plans with required structural calculations signed and stamped by a professional engineer registered in the state of Washington.

2) Cast-in-place and precast detailed steel reinforcement drawings.

3) Details of reinforcing steel used to tie duct bank to rigid underground structures it enters.

4) Cast-in-place and precast manufacturer's concrete mix designs for structures and colored concrete as indicated.

5) Dimensions and details of structure.

6) Vault covers, including inscription.

c. Shop drawing information may be combined on a single drawing if clarity is not thereby impaired.

d. Submit shop drawings which fully demonstrate that the work to be performed and the materials to be provided comply with the provisions of these Specifications.

2. Conduit Fill Calculations:

a. Provide conduit fill calculations for every conduit / conductor combination scheduled on the Contract Drawings or otherwise required to be installed for this project.

b. Utilize actual conduit interior dimensions obtained from submitted product data complying with this Specification and conductor areas obtained from product data submitted under low-voltage electrical power conductor and cables requirements as required by the Contract as the basis for these calculations.

c. Calculations shall demonstrate that the intended conduit type / size shall provide 20 percent surplus capacity for the installation of future conductors. For instance, in cases where the NEC conduit maximum fill percentage is 40 percent, the 20-percent surplus capacity would equate to a maximum 33 percent conduit fill.

d. Calculations shall be provided for review prior to the scheduled installation of any conduit, to facilitate review. Calculations shall be reviewed and approved by Sound Transit prior to the installation of any conduit and wiring.

B. Transmit the following:

1. Provide a list of five (5) major projects for which similar products have been supplied, which have been in satisfactory use or operation for the past five (5) years.

2. Product Data:

a. Provide product data for each type of material specified and proposed for use. Indicate the name of manufacturer, brand name, and catalog number of each item. Transmit the list complete at one time, with items arranged and identified in numerical sequence by Contract Specifications Section and Article numbers.

b. Manufacturers' specifications and other data required to demonstrate compliance with these Specifications:

1) Catalog cuts for the following products:

a) Raceways.

b) Duct bank tie-downs.

c) Underground duct system including manholes, pull boxes, conduit spacers, handholes, cable junction boxes, and termination boxes.

d) Manhole, pull box, and handhole covers and frames.

e) Related miscellaneous hardware and metal items for cable trenches and wireways.

f) Trench and wireway covers including composition of

Fiberglass Reinforced Plastic materials, divider partition panels, method of joining sections, expansion joint mounting, and support details.

3. Compliance with Applicable Standards:

a. Where equipment or materials are specified to conform to the standards of organizations such as ANSI, ASTM and NEMA, submit evidence of conformance. The label or listing of the specified agency will be acceptable evidence.

b. Instead of the label or listing, the Contractor may submit a written certificate from an approved, nationally recognized testing organization, stating that the items have been tested and that the units conform to the specified standard.

c. Accompany test reports by signed statements from the manufacturer certifying that the previously tested material or equipment is physically, mechanically, and electrically identical to that proposed for the Contract.

1.04 QUALITY ASSURANCE

A. Qualification of Manufacturers:

1. Select manufacturers of the products specified for work under this Section who are in the business of manufacturing similar products and are able to provide a history of successful production of the specified products.

2. Inspection: Ensure completed facilities are approved by the Resident Engineer before installation of cable and equipment. Perform corrective work at no additional cost to Sound Transit.

1.05 DELIVERY, STORAGE AND HANDLING

A. Accept materials on site in original factory packaging, labeled with manufacturer's identification.

B. Protect from weather and construction traffic, dirt, water, chemical, and mechanical damage, by storing in original packaging.

PART 2 - PRODUCTS

2.01 MATERIALS

A. Precast concrete electrical boxes, pull boxes, and vaults:

1. Reinforce concrete in a manner which is regularly provided in standard products of the manufacturer.

2. Standard manufactured structures which meet project requirements will be acceptable.

3. Provide concrete inserts for mounting cable support brackets as indicated.

4. Provide pull box covers with two lifting eyes and two hold-down bolts.

5. In public and/or non-secure spaces, security shall be integrated in items including, but not limited to, electrical boxes, pull boxes, and vaults.

B. Cast-In-Place Concrete for Duct bank Encasements, Manholes, Pull Boxes, and Vaults

1. Concrete: 3000 pounds per square inch with 4-inch slump in accordance with Portland cement concrete as required by the Contract.

2. Red concrete: Portland cement concrete, using 100 pounds of iron oxide for 8 cubic yards of concrete, as required by the Contract.

3. Frames, Covers, Gratings, Steps and Sumps: Provide as indicated and in accordance with Systems Standard Drawings and Contract Drawings.

4. Cover Identification: Provide covers with embossed or engraved identification as indicated and in accordance with as required by the Contract.

5. In public and/or non-secure spaces, security shall be integrated in items including, but not limited to, pull boxes, manholes, and vaults.

6. In Manholes: Provide sump hole 1ft x 1ft for dewatering tasks.

C. Sand:

1. Clean, graded, washed, passing a No. 4 U.S. sieve, and conforming generally to ASTM C33/C33M for fine aggregate.

D. Warning tape:

1. Heavy gage, yellow, detectable plastic for direct burial, material resistant to corrosive soil, 6-inch minimum width, minimum 4 mils thick.

2. Print with warning that an electrical duct bank is located beneath the tape.

3. Install warning tape 12 inches below finished grade.

E. Duct bank tie-down:

1. Non-metallic rod or stake with sufficient friction to prevent ducts from pulling rod out of ground and “floating” when concrete is placed.

F. Raceway Supports:

1. Conduit clamps for individual conduit supports shall be one hole, galvanized heavy gauge steel, or galvanized malleable iron with clamp back. Channels, fittings and conduit racks shall be as specified in this Section.

G. Channels and Fittings:

2. Hanger rods shall be high tensile strength galvanized carbon steel or electro-galvanized and zinc chromate coated steel with free running threads, 3/8 inch minimum.

3. Channels and channel fittings, clamps and accessories shall be hot-dip galvanized, 12-gauge steel with holes 1-1/2 inch on center.

4. Channels shall be 14 gauge minimum, 13/16 inch or 1-5/8 inch deep by 1-5/8 inch wide minimum.

5. Beam Clamps: Malleable Iron, with tapered hole in base and back to accept either bolt or hanger rod. Set screw: hardened steel.

6. Where heavy-duty racks are called out, channel shall be 12 gauge single or double 1-5/8 inch deep by 1-5/8 inch wide.

7. Aluminum, light gauge or low-strength metals or materials shall not be used.

8. Channel System Manufacturer: Unistrut, Powerstrut, Cooper B-line, Steel City, or approved equal as approved by Resident Engineer.

F. Anchors

1. Anchors shall be provided with sufficient strength to support four times the load as follows:

a. For hollow masonry, toggle bolts or masonry expansion anchors shall be used.

b. For solid masonry, brick, or pumice block, masonry expansion anchors shall be used.

c. For metal, machine screws, bolts, or welded studs with nuts and lock washers shall be used.

d. For wood, wood or sheet-metal screws shall be used.

e. For concrete, wedge type expansion anchors shall be used. Approved Product: Phillips Red-Head, Fastenal, or approved equal as approved by Resident Engineer.

2. Powder driven anchors or studs are prohibited for all applications.

3. Epoxy anchors are prohibited for all applications unless approved by Resident Engineer.

G. Fasteners and Hardware:

1. Fasteners and hardware shall be suitable for the use and environment intended. All fasteners shall be corrosion resistant. Plated steel fasteners may be used indoors, in dry locations, only. Unplated steel shall not be used.

2. Stainless steel fasteners shall be used in manholes, handholes, trenches and splice boxes, where exposed to weather, or in damp or wet locations. Bolted connections shall be made using lock washers.

H. Corrosion Control:

1. Material and equipment shall be designed to ensure satisfactory operation and life in the environmental conditions that exist where the material or equipment is installed.

2. Wherever “galvanized” or “hot-dip galvanized” is called out in this Section of the Specification, the material shall be coated in accordance with ASTM A123/A123M. Galvanneal finish is an acceptable alternative to hot-dip galvanizing of sheet or structural steel if cut edges are protected from corrosion. See Division 5 for shop applied coatings.

3. Wherever materials are called out as “hot-dip galvanized” or “galvanized”, the coating is intended to be applied in addition to normal manufacturer’s finish. Some materials or products specified, which are not readily available in the specified hot-dip finish, shall be “custom” hot-dipped after manufacture by an independent galvanizer. Where finishes are called out as galvanized and the specified product cannot be either manufactured with a hot-dip finish, or cannot be hot-dip galvanized after manufacture, the specified product shall be furnished with a finish that will perform equal to hot-dip galvanized as approved by Sound Transit.

K. Conduit and Duct:

1. Electrical Rigid Steel (Galvanized Rigid Steel – GRS) Conduit and Accessories: ANSI C80.1; hot-dip galvanized inside and out after threading; each length shall bear UL label:

a. Fittings and Accessories:

1) Bushings: Nylon-insulated, metallic, grounding type.

2) Sealing Bushings

a) Galvanized malleable or ductile iron bushings with Bakelite sealing and pressure discs and individual neoprene cable rings.

b) Bushings shall seal ends of GRS conduit against the entrance of water, air or dust around emerging cables.

c) Acceptable Manufacturer, Product: O/Z/Gedney, type KR or approved equal as approved by Resident Engineer.

3) Conduit straps, clamps, and clamp backs: Galvanized malleable iron.

2. PVC-Coated Galvanized Rigid Steel Conduit (PVC/GRS): NEMA RN 1, with corrosion resistant internal coating.

a. Shipping: Thread protectors installed on both ends of conduit, with couplings packaged separately.

3. PVC Electrical Conduit and Fittings:

a. NEMA TC 2, EPC-40-PVC; heavy wall, high impact strength, rigid PVC.

b. Fittings: NEMA TC 3, EPC-40-PVC.

c. NEMA TC 2, EPC-80-PVC; heavy wall, high impact strength, rigid PVC for underground applications

d. Fittings: NEMA TC 3, EPC-80-PVC.

4. Epoxy and Phenolic Fiberglass Conduit and Fittings: NEMA TC 14; standard-wall and extra wall (XW):

a. Conduit joints and fittings: Tapered or untapered; all of one type.

5. Liquidtight Flexible Metallic Conduit and Fittings:

a. Core: Flexible galvanized steel with a continuous copper bonding conductor spiral wound between the convolutions.

b. Jacket: Extruded liquidtight plastic or neoprene; moisture- and oil-proof, capable of conforming to the minimum radius bends of flexible conduit without cracking; self-extinguishing with low halogen containing material.

c. Fittings: Zinc-coated.

6. Electrical Nonmetallic Tubing (ENT) and Fittings:

a. Listed UL 1653 and NEMA TC 13.

b. Fittings and outlet boxes shall be from the same manufacturer as ENT.

c. Outlet boxes shall be capable of supporting 50 pounds.

d. Mud boxes shall have threaded brass inserts.

7. Conduit Expansion Fittings:

a. Factory installed packing ring, designed to prevent the entrance of moisture.

b. Pressure ring.

c. Grounding ring or a grounding conductor for metallic expansion couplings.

d. Use fittings which maintain a constant inside diameter in every position and provide a smooth wireway for protection of wire insulation.

I. Innerduct:

1. Smooth-wall HDPE innerduct, SD 13.5, meeting dimensional requirements of ASTM D3035 and material requirements of ASTM D1248.

2. Nominal size: 1 inch, orange exterior color.

3. Couplings: Pneumatic couplers specifically made for fiber blowing and capable of withstanding a pressure of 125 psi.

4. Innerduct Sealing Plugs: High-impact, water-tight and gas-tight with elastic gaskets for sealing off innerduct after installation and proof-testing. Provide with end-to-end mule tape pull string.

5. Carlon, Pyramid, Duraline or approved equal as approved by Resident Engineer.

J. Galvanized Steel Field Coating:

1. Organic cold galvanizing coating: minimum 95 percent metallic zinc by weight in dried film; manufactured by ZRC Products Company, or approved equal as approved by Resident Engineer.

K. Oxide Inhibiting Joint Compounds:

1. Petroleum-based compound with evenly suspended zinc particles.

2. Burndy “Penetrox A” or approved equal as approved by Resident Engineer.

L. Conduit Trapeze Hangers and Framing Channel:

1. Hangers:

a. Two or more steel hanger rods, a steel horizontal member, U-bolts, clamps, and other attachments as necessary for securing hanger rods, and conduits.

b. Capable of supporting a load equal to the sum of the weights of the conduits and wires, the weight of the hanger itself, plus 200 pounds.

c. Steel hanger rods: Galvanized, not smaller than 3/8-inch diameter, threaded either full length, or for a sufficient distance at each end to permit at least 1-1/2 inches of adjustment.

d. Horizontal member:

1) Structural grade steel, 1-1/2 by 1-1/2 inches or 1-5/8 by 1-5/8 inches, 12 gage, cold-formed, lipped channel, designed to accept special spring-held hardened steel nuts for securing hanger rods and other attachments. Ensure nuts and clamps are compatible with the channel.

2) Two or more channels may be welded together to form horizontal members of greater strength.

3) Hot-dip galvanized after fabrication in accordance with ASTM A123/A123M or ASTM A153/A153M, as applicable.

4) Manufacturer: Unistrut or approved equal as approved by Resident Engineer.

M. Cable Trays:

1. Metal Cable Tray: NEMA VE 1, except for modifications indicated:

a. Components: Hot-dip galvanized steel in accordance with ASTM A123/A123M, or stainless-steel Type 304 or Type 316, as indicated.

b. Fiberglass cable tray: NEMA FG 1.

c. Dimensions: Use trays with a width of 6 inches minimum and a loading depth of 3 inches minimum. Use trays with an inside nominal depth of 5 inches minimum. Use curved fittings with a 24 inches minimum curve radius, unless otherwise approved by the Resident Engineer.

d. Type: Ladder type or solid bottom type with solid covers, as indicated.

e. Performance Requirements:

1) Verify the cable tray system is capable of supporting a total cable load of 55 pounds per linear foot for cable tray of 30 inches wide or less and 88 pounds per linear foot for cable tray over 30 inches wide on a maximum span of 8 feet including a static concentrated load of 200 pounds as specified below, with a safety factor of two based on the destructive load, regardless of the type of splice plates or type of span, when tested in accordance with load test procedure specified in NEMA VE 1.

2) Ensure that straight sections and fittings don’t permanently deform under a 200-pound static concentrated load applied vertically along a 4-inch length for both of the following conditions:

3) Load applied to center of one tray section having specified cable load and support spacing. Apply load at midpoint between supports over a splice connection.

4) Load applied to one rung of empty tray section having specified support spacing. Locate the load at midpoint between side rails and supports.

2. Cable Tray Supports:

a. Capable of carrying a working load of 100 pounds per linear foot, with a safety factor of 3.0 when loaded in accordance with NEMA VE 1, Section 3, and tested in accordance with NEMA VE 1, Section 4.

b. Manufactured or fabricated in accordance with the cable tray manufacturer's recommendations.

N. Outlet Boxes, Junction and Pull Boxes:

1. Provide electrical boxes of the material, finish, type, and size indicated and as required for the location, kind of service, number of wires, and function.

2. Not all junction boxes are shown on the plans. Junction boxes and pull boxes shall be installed as necessary by the contractor to aid in pulling wire, and to be in conformance with NFPA 70. There shall not be more than a total of 270 degrees of conduit bends between pull points per Sound Transit criteria. Contractor is to coordinate the location of the junction boxes and pull boxes with other trades to ensure that the boxes will remain accessible after all construction is complete.

3. Provide boxes complete with accessible covers designed for quick removal and suitable for the purpose for which they will be used, except that boxes in which, or on which, no devices or fixtures are to be installed shall be equipped with flat or raised blank covers as required. All Junction and pull boxes with covers in publicly-accessible areas shall use tamper-resistant screws. See common work results for electrical as required by the Contract..

4. For boxes below 100 cubic inches in size or boxes for embedment in concrete use cast metal. Conform to the requirements for cabinets for boxes over 100 cubic inches in size, except when boxes in interface pull boxes are cast metal with gasketed cast metal covers. Use Type FD boxes for surface mounted wiring devices.

5. Pedestrian type junction boxes shall be used for applications that require a junction box to be embedded in floor concrete or grade. The junction boxes shall be designed to be mounted in sidewalks and other flat concrete surfaces. The boxes shall have checkered covers and be made to withstand pedestrian traffic. These boxes shall be provided with a flat, neoprene gasket, attached to the cover. This box shall be cast iron and the finish shall be hot dip galvanized. Cover shall be secured with tamperproof, uniquely-keyed stainless steel cover screws as described in common work results for electrical requirements as required by the Contract..

6. Ensure covers are the same thickness as boxes and are secured in position by means of No. 10-24 stainless steel machine screws set in recessed cover holes. Arrange covers to be readily and conveniently removed.

7. Ensure junction boxes are galvanized inside and outside. Where outlet boxes are used as junction boxes, do not use boxes smaller than 4 inches square by 1-1/2 inches deep. Provide such boxes with flat blank covers.

8. For exposed installation, use outlet and switch boxes made of cast metal, not smaller than 4 inches square by 2-1/8 inches deep.

9. Conduit bodies: Cast metal access pull and junction boxes: ANSI/NEMA FB 1, hot dipped galvanized cast iron, or electro-plated zinc cast iron, or stainless steel with gasketed cover.

10. Provide brackets, supports, hangers, fittings, bonding jumpers, and other installation accessories as required.

11. Provide neoprene gaskets 1/8-inch thick for boxes subjected to weather.

12. Ground each box as specified in grounding and bonding for electrical systems requirements, as required by the Contract.

13. Boxes for systems control and communications applications shall be stainless steel (grade 316) conforming to NEMA 250 Type 4X and shall be provided with appropriate labels.

14. All boxes for use in train ROW, exterior areas, exterior and interior non-conditioned spaces, and below grade (interior/exterior) areas shall be stainless steel, conform to NEMA 250 Type 4X (grade 316) and shall be labeled accordingly.

15. All junction boxes for use in conditioned interior areas shall be rated NEMA 12.

16. All junction boxes for use in escalator and elevator pits shall be NEMA 4X stainless steel (grade 316).

17. Coordinate location of boxes with equipment placement. Junction boxes shall be accessible for maintenance.

O. Enclosures:

1. Stations:

a. Comply with NFPA 70 and NFPA 130 for appropriate enclosure type for protection based on environmental conditions.

b. Exposed public areas subject to hose-down and splashing water shall be NEMA 4X stainless steel (grade 316).

c. NEMA 12 for indoor use in non-public areas.

d. Nonmetallic enclosures shall not be used.

2. Parking Garages:

a. Outdoor boxes shall be rated minimum NEMA 3R. Areas subject to hose-down and splashing water shall be NEMA 4X stainless steel (grade 316).

b. Comply with NFPA 70 for appropriate enclosure type for protection based on environmental conditions.

c. Stainless steel and plastic enclosure may be used. Plastic enclosures shall be made from a UV-stabilized polycarbonate.

P. Cabinets:

1. Cabinet Boxes: Galvanized (dry indoor locations) or NEMA 4X stainless steel (grade 316) (exterior and damp/wet locations), size as noted on Contract Drawings. Provide white, galvanized steel interior mounting panel for mounting terminal blocks and relays in interface terminal cabinets, or where otherwise required.

2. Cabinet Fronts: Steel, surface or recessed type as required for the application with continuous hinge and flush lock. Supply locks for cabinets from a single manufacturer with standard key blank that are field-keyable.

3. Electrical Service and Distribution Cabinets: NEMA 4X stainless steel (grade 316) with non-directional brushed finish and accessories shown on Contract Drawings. Provide metering provisions meeting the requirements of the serving electric utility for Service Cabinets or switchboard metering sections. Provide lock mechanism as required above.

Q. Cover Security in Public and/or Non-secure Spaces:

1. In public and/or non-secure spaces, security shall be integrated in items including, but not limited to, outlet boxes, junction boxes, pull boxes, and cabinet covers. Exception: In public areas that are secure during non-revenue hours, this requirement applies only to elements installed at an elevation lower than 10 feet above finished floor.

2. All boxes, enclosures, and cabinets shall have hardware and/or threading to accommodate the appropriate tamperproof, uniquely keyed fastener.

3. Cover fasteners shall be tamperproof, uniquely keyed for Sound Transit fasteners. The fastener shall be stainless steel and shall have the ability to repel locking pliers. The key shall be nonsymmetrical, custom, and unique to Sound Transit. Fastener key heads shall match existing Sound Transit keyed fasteners.

4. Provide Sound Transit with ten 1/4-inch hex drive key bits. (Bryce Key-Rex Fastener with Raptor Claw option or approved equal as approved by Resident Engineer.)

5. Provide covers with two tamperproof fasteners, or more as required.

6. Covers for boxes, enclosures, and cabinets in pedestrian areas shall have recessed areas for tamperproof fasteners.

PART 3 - EXECUTION

3.01 PREPARATION

A. Before beginning construction or installation of a section of underground conduit or ductwork, verify that the site is in suitable condition for installing conduit or ductwork as indicated.

3.02 EXCAVATION, TRENCHING AND BACKFILLING

A. Perform excavation, bedding, and backfilling for underground conduits and structures as stated elsewhere in the Contract Documents.

3.03 CONSTRUCTION

A. General Requirements:

1. Install electrical raceway, boxes and accessories in locations as indicated, in accordance with NFPA 70, (parking garages), NFPA 130 (stations and guideway), NECA NEIS 1 and manufacturer's instructions, to provide a complete and operable system.

2. Ensure conduit, support fittings, boxes and conduit fittings are of compatible materials that will not corrode when subjected to moisture or standing water.

3. Provide anchor bolts and anchorage items as required, and field check to ensure proper alignment and location.

4. Install conduit to avoid conflicts with other work. Install horizontal raceways close to the ceiling or ceiling beams and above water or other piping wherever possible. Conduit shall be installed concealed from public view.

5. Install metallic conduit such that it will not be in contact with standing water, wet weather or station hose-down cleaning activities.

B. Duct Banks:

1. Group individual conduits together to form a duct bank in conformance with the requirements as specified.

2. Inspect ducts and couplings to ensure that only clean and undamaged pieces are incorporated in the work.

3. Install ducts, joints, and use manufactured space separator assemblies according to manufacturer's printed instructions and recommendations.

4. Do not use spacers or space separators which transmit any vertical load to the conduit.

5. Install duct banks or conduits with a minimum slope of 3 inches to each 100 feet away from buildings and towards manholes, pull boxes, and handholes.

6. Terminate conduits and ducts in end-bells in vaults.

7. Where duct bank enters rigid underground structures, provide reinforcing steel to tie the duct bank to the structure.

8. Construct the concrete-encased duct bank with 3-inch minimum concrete cover on all sides.

9. Protection: when installation of conduits and ducts is temporarily suspended or terminated, close ends of ducts with caps or plugs fitted to prevent entry of water or debris. Use caps or plugs designed for that purpose by the conduit manufacturer.

10. Mandrelling: As each section of a duct line is completed between manholes, handholes, or pull boxes, use testing mandrel and brush to clear ducting:

    a. For installations within the jurisdiction of Seattle City Light, perform mandrelling per the 2017 Seattle City Light Construction Standard, Standard Number U2-11.40/NDK-40.

b. For installation in other jurisdictions:

1) Draw mandrel not more than 1/4 inch less than the size of the conduit through each conduit, after which draw a brush with stiff bristles through until the conduit is clear of particles of earth, sand, or gravel.

2) Install conduit caps or plugs immediately thereafter.

3) Submit a written report providing a conduit identification number, size, material, location, the type and size of mandrel used, and indicate whether the conduit is tagged. Indicate on the report the acceptance date and the Contractor's foreman.

11. Install 1/8 inch or larger diameter polypropylene pulling cord in ducts including innerducts. Ensure accessibility for conduits with threaded caps, or fasten each cord to pull iron anchorage in pull box, manhole, or vault with 2 feet minimum slack.

12. Maintain at least 1-1/2 inches of space between raceways for signal / communications duct banks and 3 inches for power.

13. Set duct banks on undisturbed earth or compacted fill.

14. Maximum of 16 raceways will be permitted in any one (1) duct bank where terminated in a single handhole or manhole.

C. Precast Concrete Structures:

1. Install precast electrical boxes, pull boxes, handholes, manholes, and vaults as indicated.

2. Manholes and handholes shall be of the precast type, complete with cable supports and pulling irons.

3. Provide a driven ground rod at each manhole or handhole, and ground all metallic parts.

4. Where installed in streets, provide traffic-rated cast iron cover and adjustable grade ring. Welded steel covers may be provided elsewhere.

5. Place boxes on 12-inche minimum of 3/4-inch minus crushed rock.

6. Place manholes on 12-inch minimum of 3/4-inch minus crushed rock.

7. Seal unused openings with cement mortar.

D. Cast-In-Place Concrete Structures:

1. Contractor shall ensure the location of each vault before construction of structure is started.

2. Construct the top, walls, and bottom of reinforced concrete. Construct the walls and bottom of monolithic concrete construction.

3. Place concrete for vaults on well-compacted soil with a minimum of 6 inches of aggregate base.

4. Provide gray cast iron frames and covers. Provide a machine-finished cover seat to ensure a matching joint between the frame and cover.

5. Where duct lines enter vaults, the sections of duct may be either cast in the concrete or may enter through a square or rectangular opening of suitable dimensions provided in the utility structure. Seal any openings used for conduit entry into vaults using a manufactured thru-wall sealing fitting or other similar approved method.

6. Provide a cable-pulling iron anchorage in the wall opposite each duct bank entrance.

7. Install vault covers flush with sidewalks or curbs.

E. Conduit and Duct Type Requirements:

1. Above grade exterior or potentially-wet areas: GRS or fiberglass conduit. Use GRS or XW fiberglass when above grade or in underground enclosed structures. Standard wall fiberglass is permitted for use in above ground areas that are concealed, not used for air handling, and where protected from damage.

2. Below grade spaces not fully enclosed (including tunnel passenger stations): PVC/GRS or low smoke zero halogen (LSZH) fiberglass conduit and accessories.

3. Conduits for emergency loads (such as emergency lighting and fire alarm system): GRS, XW fiberglass, or PVC/GRS, as required. In exposed tunnel locations, provide low smoke zero halogen (LSZH) phenolic fiberglass conduit to meet NFPA 130 requirements.

4. Below grade exterior areas: PVC/GRS conduit where direct buried or transitions to above grade, PVC and standard wall fiberglass electrical conduit encased in concrete duct banks, XW fiberglass conduit (see underground ducts and raceways for electrical systems, as stated elsewhere in the Contract Documents).

5. PVC electrical conduit may only be installed where covered with at least 3-inches of concrete, or where required in short sections for electrical isolation. Do not leave PVC conduit exposed unless specifically shown on Contract Drawings. Terminate PVC within concrete walls or slabs with a male adapter and PVC/GRS coupling installed flush with the finished surface.

6. Provide PVC/GRS conduit section for transition between an embedded conduit and the above-ground metallic conduit. Ensure that the above-ground PVC coated metallic conduit extends 1-foot minimum above ground or to box termination, whichever is less.

7. Install liquidtight flexible metal conduit only where required for flexibility such as connections to vibrating equipment and across joints subject to differential movement where the use of expansion-deflection fittings would not be suitable except where otherwise indicated on the Contract Drawing. Length shall not exceed 6 feet unless shown otherwise.

8. Flexible electrical nonmetallic tubing (ENT) is permitted for garage installations only when embedded in the concrete parking deck. Transition to GRS conduit where ENT conduit exits the slab. Exposed ENT shall not be permitted.

9. Running threads shall not be used.

F. Conduit Minimum Sizes:

1. Unless otherwise noted on drawings, minimum conduit sizes are as follows:

a. GRS: 3/4-inch diameter for exposed locations and 1-inch diameter for embedded locations.

b. PVC/GRS: 3/4-inch diameter for exposed locations and 1-inch diameter for embedded or underground locations

G. Raceways and Boxes:

1. PVC Conduit: 1-inch diameter for embedded or underground locations.

2. EB Duct: (where applicable): 4-inch diameter.

3. Epoxy or Phenolic Fiberglass Conduit: 3/4-inch diameter for exposed locations and 1-inch diameter for embedded locations.

4. Liquidtight Flexible Metallic Conduit: 1/2-inch diameter.

5. ENT: 1-inch diameter.

6. Conduit and Duct Bends:

a. Install conduit runs with not more than 270 degrees total bends between pull boxes. Where more bends are required in a run, install pull boxes as required to facilitate pulling conductors even if not indicated.

b. Minimum Bend Radius:

1) Exposed or Embedded in Platform or Structure Slabs or Walls: NFPA 70 National Electrical Code Chapter 9, Table 2 – “Other Bends”.

7. Underground – Not in Station Areas:

a. 1-inch conduit: 18-inch radius.

b. 1-1/4-inch conduit: 20-inch radius.

c. 1-1/2-inch conduit: 22-inch radius.

d. 2-inch conduit: 24-inch radius.

e. 2-1/2-inch conduit: 27-inch radius.

f. 3-inch conduit: 30-inch radius.

g. 3-1/2-inch conduit: 33-inch radius.

h. 4-inch conduit: 36-inch radius.

i. 5-inch conduit: 42-inch radius.

j. 6-inch conduit: 48-inch radius.

8. Fiberglass and PVC Conduit Bending Restrictions:

a. Hot bend bends with radii less than 100 feet using a heater recommended by the conduit manufacturer. Bends with radius 100 feet or larger may be cold bent.

9. Horizontal bends in Schedule 40 PVC conduit shall have a bend radius not less than six feet, if conduit segment length (between pull points) is greater than 300 feet.

H. Conduit and Duct installation:

1. Install conduit in accordance with NFPA 70 (garages), NFPA 130 (stations and tunnels), local codes and ordinances and as indicated.

2. Prevent material and water from entering the conduit, or pull and junction boxes.

3. Provide threaded cap or similar closure designed for the purpose on conduits that are not terminated immediately. Tape is not acceptable for temporary sealing.

4. Match extensions to existing work to existing size.

5. Where conduit passes across an expansion or contraction joint in the structure, install the conduit at right angles to the joint, and an approved conduit expansion coupling or expansion/deflection fitting at the joint selected based on the expected movement of joint. Confirm with Resident Engineer.

6. Provide expansion fittings and slip collars at support points in conduit runs where required to compensate for thermal expansion.

7. Where conduit is exposed to different temperatures, seal the conduit to prevent condensation and passage of air from one area to the other.

8. If PVC conduit is not fully encased at one time, leave one end of the raceway free until encasing is restarted, or a PVC expansion joint is installed in the run.

9. When field threading of conduit is required, clean threads with a solvent to remove oil as recommended by coating manufacturer, and coat threads with organic cold galvanizing coating, in accordance with manufacturer's instructions.

10. Coat threads with oxide inhibiting compound for metal-to-metal threaded joints. Take care that compound is not present on interior of conduit after installation.

11. Seal conduits with watertight duct sealing system, where waterproofing is required.

12. Install liquidtight flexible metal conduit so that liquids tend to run off the surface and do not drain toward fittings. Provide sufficient slack to reduce the effects of vibration.

13. Terminate stubbed conduits for future use by inserting a male pipe plug with provisions for pulling cord attachment. Install wrench-tight into the flush coupling.

14. Mandrelling: As each section of a duct line is completed between pull boxes, use testing mandrel not more than 1/4 inch less than the size of the conduit and brush to clear ducting:

    a. Draw mandrel through each conduit, after which draw through a brush with stiff bristles having a diameter of 1/2–inch greater than the internal diameter of the duct, until the conduit is clear of particles of earth, sand, or gravel.

    b. Install conduit caps or plugs immediately thereafter.

    c. Notify the Resident Engineer prior to mandrelling any conduit.

d. Submit a written report providing a conduit identification number, size, material, location, the type and size of mandrel used, and indicate whether the conduit is tagged. Indicate on the report the acceptance date and initials of the Resident Engineer and the Contractor's foreman.

15. Install 1/8-inch or larger diameter polypropylene pulling cord in ducts. Ensure accessibility for conduits with threaded caps, by tying cord to internal eye of conduit caps or by fastening each cord to pull anchorage in pull box, manhole, or vault with 2 feet minimum slack.

I. Conduit Grounding and Bonding:

1. Install metallic conduits to be electrically and mechanically continuous and connected to ground by bonding to the grounding system.

2. In dry areas, provide two (2) locknuts, one inside and one outside of box or enclosure and an insulated throat grounding bushing, for rigid conduit terminating at steel box, panelboard, cabinet, or similar enclosure.

3. Conduit terminations in exposed areas and damp and wet locations:

a. Cabinet connections: provide watertight threaded hubs with sealing O-rings. Provide a positive ground connection for an external grounding conductor.

b. Cast boxes and fittings: provide threaded connections to tapered threaded hubs.

4. Terminate the conduit in appropriate boxes at motors, switches, outlets, and junction points. Provide insulating bushing or grounding bushing on conduit end.

5. See grounding and bonding for electrical systems, as stated elsewhere in the Contract Documents, for further requirements.

J. Innerduct Installation:

1. Use glue and primer as recommended by manufacturer to withstand required 125 psi pressure. Apply glue and primer under dry conditions only.

2. Install innerduct in accordance with manufacturer's recommendations to withstand required 125 psi pressure.

3. Pressure test innerduct at 125 psi after installation and verify that it withstands and maintains the pressure and has no leaks. Submit test results to Resident Engineer for approval.

4. Provide expansion fittings in innerduct runs where necessary or suggested by manufacturer to compensate for thermal expansion.

K. Raceway Support:

1. Conduit supports shall be capable of supporting a load equal to the sum of the weights of the conduits and wires, the weight of the hanger itself, plus 200 pounds. Straps and clamps shall be listed for the task and made up tight to prohibit movement unless longitudinal movement is required due to conduit expansion.

2. Where recommended by manufacturer to accommodate longitudinal movement due to thermal expansion, provide slip collars over conduits at support points.

3. Multiple runs of exposed conduit shall be grouped and supported on conduit racks constructed from channels, conduit clamps and fittings. Conduit racks shall be the trapeze style constructed from 1-5/8-inch by 1-5/8-inch steel channels, supported by 3/8-inch or ½-inch rods and concrete expansion anchors. Conduit racks shall be provided with 25 percent spare capacity, minimum.

4. Conduit racks may be used for support of vertical or horizontal conduit runs, except where otherwise specified. Conduit racks shall be braced in accordance with these Specifications to prevent sway in the event of a seismic event. Provide supplementary bolted stop-blocks below each conduit clamp in a vertical strut to assure that clamps cannot slide down the channel.

5. Where conduits 2 inch or larger nominal size are supported by racks, heavy-duty channel, clamps and accessories shall be used.

6. Support individual wall mounted horizontal conduits not larger than 1-1/2 inches in diameter by means of one hole conduit straps with back spacers or individual conduit hangers.

7. Do not fasten supports to pipes, ducts, mechanical equipment, or conduit.

8. Space conduits installed against concrete surfaces 1/4 inch away from the surface by clamp backs or other approved means.

9. Support individual horizontal conduits larger than 1 1/2 inches nominal size by individual hangers.

10. Apply a thick coat of cold galvanizing coating to the field-cut ends of steel hanger rods and steel channel by brush. Coating may be done by spraying if at least 3 coats are applied per manufacturer's instructions.

L. Outlet, Junction, and Pull Boxes:

1. Securely attach outlet, junction, and pull boxes to the structure. Do not use conduits entering the box as supports for the box.

2. Mount outlet, junction, and pull boxes so as to prevent moisture from entering or accumulating within the boxes.

3. Junction and Pull Boxes:

a. Install so that covers are readily accessible after completion of the installation.

b. Do not install boxes above suspended ceilings, except where the ceiling is of the removable type or where definite provisions are made for access to each box.

M. Cable Trays and Supports:

1. Install cable trays as indicated using approved fittings and adequately supporting the complete system.

2. Use steel channels, threaded rods and hardware in accordance with raceways and boxes for electrical systems requirements.

3. Provide anti-sway brackets on horizontal tray assemblies in accordance with approved Seismic Bracing and Anchorage Plan (see common work results for electrical requirements as stated elsewhere in the Contract Documents).

4. Connect each isolated cable tray system or the entire tray system to the building equipment grounding system with a bare copper conductor routed throughout the tray system and bonded to each individual ladder section in accordance with all National Electrical Code requirements.

5. Provide expansion/deflection fittings in cable tray installations where they cross structure expansion joints and to accommodate differential expansion between cable tray and structure. Bond metallic cable trays across expansion/deflection fittings.

6. Provide stainless steel channel supports for all NEMA 4X stainless steel (grade 316) enclosures and boxes.

N. Installation of Concrete Expansion Anchors:

1. Concrete expansion anchors shall be used wherever a bolted attachment to solid concrete is required. Holes for anchors shall be drilled perpendicular to the concrete surface and the anchor installed in accordance with manufacturer's instructions.

2. Anchors installed at an angle to the surface, or anchors not fully seated, shall be replaced. Anchors shall not be spaced closer than 6 times the diameter of the hole, center to center.

O. Installation of Fasteners and Hardware:

1. The material, coating and finish of fasteners and hardware shall be suitable for the environment and use intended. Wherever fasteners exhibit corrosion at any time during the Contract, the fasteners or hardware shall be replaced with a suitable type as directed by Resident Engineer at no additional cost to Sound Transit.

P. Field Touch Up:

1. Perform on galvanized surfaces where required due to cutting or construction damage.

2. Brush coat with a zinc rich paint, after cleaning with a solvent to remove oil. Coating may be done by spraying if at least three coats are applied.

3. For finished surfaces in public areas, apply overall coat of compatible paint with color and surface texture matching adjacent surfaces.

3.04 INTERFACE WITH OTHER WORK

A. Coordinate the work of this Section with the other electrical sections as stated elsewhere in the Contract Documents, as required to provide a complete and operable electrical installation.

B. Coordinate electrical services and work with the serving utility company and the Resident Engineer, as applicable.

C. Coordinate with work completed or in progress or to be performed under other sections of these Specifications or by other contractors. Make indicated connections to previously completed work. Where future connections to or extensions of the work are indicated, provide safe and convenient provisions for such future connections and extensions.

D. Contract Drawings show electrical equipment, raceways, and other electrical facilities diagrammatically and do not show all accessories or fittings that may be required because of obstructing structural features and architectural finishes, interfering utilities, ducts, and mechanical equipment. Investigate such conditions and determine the need for locating

equipment and materials and routing electrical raceways clear of such obstructions and interferences. Provide complete and operable electrical systems and installations in conformance with these Specifications.

E. Coordinate with work completed or in progress or to be performed under other sections of these Specifications or by other contractors or by designated subsequent contracts in the same space. Make indicated connections to previously completed work. Where future connections to or extensions of the work are indicated, provide safe and convenient provisions for such future connections and extensions.

END OF SECTION

SECTION 26 05 53

IDENTIFICATION FOR ELECTRICAL SYSTEMS

PART 1 - GENERAL

1.01 SUMMARY

A. Section includes:

1. Requirements for providing nameplates, wire and cable markers, conduit tags, conduit color coding, identification for raceway and metal clad cable, underground warning tape, warning labels and signs, and equipment identification labels.

1.02 SUBMITTALS

A. Submit:

1. Manufacturer's product data for nameplate mounting hardware.

2. Schedule for nameplates including list of wording, symbols, letter size, color coding, tag number, location, and function.

3. Samples: For each type of label and sign to illustrate size, color, lettering style, mounting provisions and graphic features.

PART 2 - PRODUCTS

2.01 MATERIALS

A. Nameplates:

1. Engraved three-layer melamine laminated plastic, not less than 3/32 inch thick.

2. Color: Black letters on a white background unless otherwise noted.

3. Emergency equipment cabinets: Nameplates shall have white letters on an orange background in accordance with NFPA 70 code requirements.

B. Wire and Cable Markers:

1. Sleeves: Non-fading, waterproof, heat-shrink plastic, machine-printed sleeve labels.

2. Cable Tags: Non-fading, plastic, printed cable tag with holes for attachment to cable with nylon cable ties.

C. Conduit Tags:

1. Size: As noted for each application in this specification.

2. Type: Designed for permanent identification. Comply with ANSI A13.1 for minimum size of letters and minimum length of color field for each raceway and cable.

D. Mounting Screws: Stainless steel machine screws or rivets

E. Mounting Adhesive: Permanent

PART 3 - EXECUTION

3.01 INSTALLATION

A. Nameplates and Identification Labels:

1. Degrease and clean surfaces to receive nameplates and identification labels.

2. Install nameplates parallel to equipment and conduit lines.

3. Secure nameplates to equipment fronts using screws or rivets. Secure nameplate to inside face of recessed panelboard or cabinet doors in finished locations.

B. Cable Tags: Affix securely to cables and conductor bundles using compatible nylon cable ties.

C. Conduit Tags: Comply with manufacturer's recommended installation procedures for a permanent installation.

D. Wire and Cable Markers.

1. Heat-shrink wire and cable markers after final installation and testing.

3.02 CONSTRUCTION

A. Identification Schedule:

1. Conductors:

a. Provide sleeve wire markers printed and installed in accordance with manufacturer's recommendations to identify each single and multiple-conductor wire and cable in panelboards, gutters, pull boxes, manholes, and at load connections.

b. In gutters, pull boxes, and manholes, if cables are not spliced, a cable tag shall be used. Attach tag securely to cable with nylon cable tie at location accessible and visible by personnel.

c. Identify cable destination and number of conductors in cable as described in Contract Drawings.

1) Power and Lighting Circuits: Identify with branch circuit or feeder number.

2) Control Wiring: Identify with control wire number as indicated on the Contract Drawings or fabricator's shop drawings.

2. Conduit and MC Cable Identification:

a. Where accessible in canopy columns and light poles, provide tag identifying system type and identifier listed on conduit and conductor schedule. Attach tag securely with nylon cable tie.

b. Provide tags on conduits at conduit termination and access points.

c. For conduits with assigned raceway numbers, provide conduit tag matching conduit identification on Contract Documents. For multiple,

parallel raceways with one raceway identifier, assign supplementary letter designations for each raceway group.

d. For conduits without assigned raceway numbers, provide generic conduit tag describing system (communications, signals, power lighting, etc.) plus identification of associated termination points.

e. Font Size:

1) 3/4-inch tags: Minimum 36-point.

2) 1-inch tags: Minimum 48-point.

3) If exposed conduit length is not sufficient to accommodate these font sizes, reduce font to the maximum size possible, rotate tag at 90-degrees, or apply tag to equipment or box nearest conduit termination.

3. Provide nameplates of minimum letter height as scheduled below unless otherwise noted:

a. Each disconnecting means shall be marked with an identification plate in letters at least ½-inch high.

b. Switchgear, Panelboards, Switchboards, and Lighting Controllers: 3/8 inch, identify equipment designation; ¼-inch, identify voltage rating and source.

c. Disconnect Switches: 3/8-inch, identify equipment designation; ¼-inch, identify voltage rating, source, and load served.

d. Individual Circuit Breakers in Panelboards: ¼-inch; identify circuit with load served. For lighting, include the specific zone in the description if applicable on the schedule.

e. Motor Starters: ¼-inch; identify circuit.

f. Individual Circuit Breakers, Enclosed Switches, and Motor Starters: ¼-inch; identify load served.

g. Transformers: 3/8-inch; identify equipment designation. ¼-inch; identify primary and secondary voltages, primary source, and secondary load and location.

h. Devices: ¼-inch; identify device:

1) Dimmers

2) Control devices

3) Pushbutton stations

4. Emergency Systems: For all boxes and enclosures larger than 6 inches by 6 inches (including transfer switches, central lighting inverters, and power panels) for emergency circuits, provide a permanent identification plate that is orange in color with white lettering. All other device and junction boxes for emergency systems and circuits shall be orange in color, both inside and outside.

5. Smoke Control Systems: For all boxes and enclosure larger than 6 inches by 6 inches (including transfer switches, central lighting inverters, and power panels)

for smoke control power and control circuits, provide a permanent identification plate that is orange in color with a yellow diagonal stripe. All other device and junction boxes for smoke control systems and circuits shall be orange in color, both inside and outside. Cover plates shall be orange in color with a yellow diagonal stripe.

6. Stair pressurization systems: For all boxes and enclosure larger than 6 inches by 6 inches (including transfer switches, central lighting inverters, and power panels) for stair pressurization power and control circuits, provide a permanent identification plate that is orange in color with a gray diagonal stripe. All other device and junction boxes for stair pressurization systems and circuits shall be orange in color, both inside and outside. Cover plates shall be orange in color with a gray diagonal stripe.

7. Non-Emergency Systems: For all boxes and enclosures larger than 6 inches by 6 inches for non-emergency circuits, provide a permanent identification plate that is black in color with white lettering.

8. Fire Alarm Systems: For all boxes and enclosures larger than 6 inches by 6 inches for fire alarm circuits, provide a permanent identification plate that is red in color with white lettering. All other devices and junction boxes for fire alarm systems and circuits shall be red in color, both inside and outside.

9. Concrete Paver Covering Electrical Handhole: Install ferrule inserts in four corners of pavers to identify location of handhole beneath paver where indicated on Drawings.

B. Conduit Color Coding:

1. Low-voltage and Medium voltage Distribution Systems: Unpainted or black

2. Fire Alarm System: Junction boxes / conduit bodies shall be substantially red in color both inside and out. Conduit and couplings shall be substantially red in color.

3. Color-Coding for Phase and Voltage Level Identification, 600 V and Less: Use the colors listed below for ungrounded service, feeder, and branch-circuit conductors:

a. Color shall be factory applied or, for sizes LARGER than No. 10 AWG if authorities having jurisdiction permit, field applied.

b. Colors for 208/120-V Circuits:

1) Phase A: Black.

2) Phase B: Red.

3) Phase C: Blue.

c. Colors for 480/277-V Circuits:

1) Phase A: Brown.

2) Phase B: Orange.

3) Phase C: Yellow.

d. Field-Applied, Color-Coding Conductor Tape: Apply in half-lapped turns for a minimum distance of 6 inches from terminal points and in boxes where splices or taps are made. Apply last two turns of tape with no

tension to prevent possible unwinding. Locate bands to avoid obscuring factory cable markings.

END OF SECTION

SECTION 26 05 74

OVERCURRENT PROTECTIVE DEVICE, SHORT CIRCUIT AND ARC FLASH STUDIES

PART 1 - GENERAL

1.01 SUMMARY

A. Section includes:

1. Requirements for contractor to provide a computer-based time-current coordination, short circuit and arc-flash study to determine settings for overcurrent protective devices, verify that equipment and protective devices are applied within their ratings, and determine the arc-flash hazard distance and the incident energy to which personnel could be exposed during work on or near electrical equipment. The study shall include the entire electrical system (both existing and proposed) for the facility.

1.02 REFERENCES

A. This Section incorporates by reference the latest revisions of the following documents.

1. Insulated Cable Engineers Association (ICEA):

a. ICEA P-32-382 Short Circuit Characteristics of Insulated Cables.

b. ICEA P-45-482 Short Circuit Performance of Metallic Shields and Sheaths on Insulated Cable.

2. Institute of Electrical and Electronics Engineers (IEEE):

a. IEEE 141 Recommended Practice for Electric Power Distribution for Industrial Plants.

b. IEEE 242 Protection and Coordination of Industrial and Commercial Power Systems.

c. IEEE 399 Recommended Practice for Industrial and Commercial Power Systems Analysis.

d. IEEE 551 Recommended Practice for Calculating Short-Circuit Currents in Industrial and Commercial Power Systems.

e. IEEE 1584 Guide for Performing Arc-Flash Hazard Calculations.

f. IEEE C57.12.00 General Requirements for Liquid-Immersed Distribution, Power, and Regulating Transformers.

g. IEEE C57.96 Guide for Loading Dry-Tape Distribution and Power Transformers.

3. National Fire Protection Association:

a. NFPA 70E Standard for Electrical Safety in the Workplace.

B. Definitions:

1. One-Line Diagram: A diagram which shows, by means of single lines and graphic symbols, the course of an electric circuit or system of circuits and the component devices or parts used therein.

2. Protective Device: A device that senses when an abnormal current flow exists and then removes the affected portion from the system.

3. SCCR: Short-circuit current rating.

4. Service: The conductors and equipment for delivering electric energy from the serving utility to the wiring system of the premises served.

1.03 SUBMITTALS

A. Transmit the following:

1. Product Data: For computer software program to be used for studies.

2. Product Certificates: For arc-flash hazard analysis software, certifying compliance with IEEE 1584 and NFPA 70E.

3. Study input data, including completed computer program input data sheets. Provide after the approval of system protective devices submittals.

4. Qualification Data: Professional Engineer

B. Submit the following:

1. Study report; signed, dated, and sealed by a qualified professional engineer.

a. Study shall include short circuit, selective coordination, and arc flash calculations.

b. Study shall include arc flash labels for all system busses that could be worked on in an energized state.

c. Provide study report for action prior to receiving final approval of the distribution equipment submittals. If formal completion of studies will cause delay in equipment manufacturing, obtain approval from Sound Transit for preliminary submittal of sufficient study data to ensure that the selection of devices and associated characteristics is satisfactory.

d. Study report at end of project to document as-built condition. Provide signed and sealed report, electronic copy, and all electronic source files from the power system modeling software.

2. Maintenance procedures according to requirements in NFPA 70E shall be provided in the equipment manuals.

3. Operation and Maintenance Procedures: Provide maintenance procedures for use by Sound Transit's personnel that comply with requirements in NFPA 70E.

1.04 QUALITY ASSURANCE

A. Studies shall use computer programs that are distributed nationally and are in wide use. Software algorithms shall comply with requirements of standards and guides specified in this Section. Manual calculations are unacceptable.

B. Arc-Flash Study Specialist Qualifications: Professional engineer in charge of performing the study, analyzing the arc flash, and documenting recommendations, licensed in the state where Project is located. All elements of the study shall be performed under the direct supervision and control of this professional engineer.

PART 2 - PRODUCTS

2.01 COMPUTER SOFTWARE DEVELOPERS

A. Software Developers: Subject to compliance with requirements, perform analysis using the latest version of one of the following:

1. Operation Technology, Inc. (ETAP).

2. SKM Systems Analysis, Inc. (Power Tools for Windows).

B. Comply with IEEE 1584 and NFPA 70E.

C. Analytical features of device coordination study computer software program shall have the capability to calculate "mandatory," "very desirable," and "desirable" features as listed in IEEE 399.

2.02 STUDY REPORT CONTENT

A. Executive summary.

B. Study descriptions, purpose, basis and scope.

C. One-line diagram, showing the following:

1. Protective device designations, ampere ratings and amp trip setting.

2. Cable size and lengths.

3. Transformer kilovolt ampere (kVA) and voltage ratings.

4. Motor and generator designations and kVA ratings.

5. Switchgear, switchboard, motor-control center, panelboard, and enclosed breaker and switch designations.

6. Utility source(s)

D. Study Input Data: As described in "Power System Data" Article.

E. Short-Circuit calculations: The calculation results shall include the following information:

1. Interrupting Duty Report: Three-phase and unbalanced fault calculations, showing the following for each system bus and equipment location:

a. Voltage.

b. Calculated symmetrical fault-current magnitude and angle.

c. Fault-point X/R ratio.

d. No AC Decrement (NACD) ratio.

e. Equivalent impedance.

f. Multiplying factors for 2-, 3-, 5-, and 8-cycle circuit breakers rated on a symmetrical basis.

g. Multiplying factors for 2-, 3-, 5-, and 8-cycle circuit breakers rated on a total basis.

F. Protective device coordination study: The study results shall include the following information:

1. Protective device trip curves for relays, electronic trip breakers, thermal magnetic breakers, fuses, overloads, etc.

2. Trip settings for selectable trip devices.

3. Trip settings for ground fault trip devices.

4. Relay setpoint files for any electronic relays.

5. Motor starting curves.

6. Transformer inrush points.

7. Generator damage curves.

8. Time current coordination curves demonstrating selective coordination of all fault paths in the system.

G. Arc-Flash Calculation: Calculation results shall include fault study input data, fault scenario descriptions, and fault-current calculations. The calculation results shall include definitions of terms and guidance for interpretation of computer printouts. The results shall include the following information for all buses and equipment in the system:

1. Arcing fault magnitude.

2. Protective device clearing time.

3. Duration of arc.

4. Arc-flash boundary.

5. Working distance.

6. Incident energy.

7. Recommended personal protective equipment.

8. Recommendations for arc-flash energy reduction.

2.03 ARC-FLASH WARNING LABELS

A. Comply with requirements in identification for electrical systems as required by the Contract. Produce a 3.5-by-5-inch thermal transfer label of high-adhesion polyester for each work location included in the analysis.

B. The label shall be in accordance with NFPA 70E. Label shall have an orange header with the wording, "WARNING, ARC-FLASH HAZARD," and shall include the following information taken directly from the arc-flash hazard analysis:

1. Location designation

2. Nominal voltage

3. Flash protection boundary

4. Incident energy

5. Working distance

6. Engineering report number, revision number, and issue date

C. Labels shall be machine printed, with no field-applied markings.

PART 3 - EXECUTION

3.01 EXAMINATION

A. Examine Project overcurrent protective devices based on initial product transmittals, and for the as-built condition. Proceed with study only after relevant equipment submittals have been assembled. Overcurrent protective devices that have not been submitted and approved prior to study may not be used in study.

3.02 SHORT-CIRCUIT ANALYSIS

A. Perform study following the general study procedures contained in IEEE 399.

B. Calculate short-circuit currents according to IEEE 551.

C. All devices and equipment in the electrical distribution system shall be included in the study.

D. Analyze the electrical distribution system from normal and alternate power sources throughout electrical distribution system for the Project. Include studies of system switching configurations and alternate operations that could result in maximum fault conditions.

E. The calculations shall include the ac fault-current decay from induction motors, synchronous motors, and asynchronous generators and shall apply to low- and medium voltage ac systems.

F. Calculate short-circuit momentary and interrupting duties for three-phase bolted faults and single line-to-ground faults at all busses and equipment in the distribution system and note selected equipment deficiencies for the following:

1. Electric utility's supply termination point.

2. Substation primary and secondary terminals.

3. Switchgear and switchboards.

4. Motor-control centers and standalone combination motor starters.

5. Automatic and manual transfer switches.

6. Panelboards and control panels.

7. Disconnect switches and enclosed circuit breakers.

8. Transformer primary and secondary.

3.03 PROTECTIVE DEVICE COORDINATION STUDY

A. Perform coordination study using approved computer software program. Prepare a written report using results of fault-current study. Comply with IEEE 399:

1. Calculate the maximum and minimum 1/2-cycle short-circuit currents.

2. Calculate the maximum and minimum interrupting duty (5 cycles to 2 seconds) short-circuit currents.

3. Calculate the maximum and minimum ground-fault currents.

B. Comply with IEEE 141 and IEEE 242 recommendations for fault currents and time intervals. (Comply with NEC for selective coordination NFPA 70; 240.12, 620.62, 700.27, 701.18).

C. Transformer Primary Overcurrent Protective Devices:

1. Device shall not operate in response to the following:

a. Inrush current when first energized.

b. Self-cooled, full-load current or forced-air-cooled, full-load current, whichever is specified for that transformer.

c. Permissible transformer overloads according to IEEE C57.96 if required by unusual loading or emergency conditions.

2. Device settings shall protect transformers according to IEEE C57.12.00 for fault currents.

D. Conductor Protection: Protect cables against damage from fault currents according to ICEA P-32-382, ICEA P-45-482, and conductor melting curves in IEEE 242. Demonstrate that equipment withstands the maximum short-circuit current for a time equivalent to the tripping or clearing time of over current protective devices including relays, circuit breakers and fuses. To determine temperatures that damage insulation, use curves from cable manufacturers or from listed standards indicating conductor size and short-circuit current.

E. Coordination-Study Report: Prepare and submit a written report including the following information:

1. Table of trip characteristics of fixed trip over current protective devices including thermal magnetic breakers and fuses.

2. Table of trip settings for selectable trip Overcurrent Protective Devices including the following information:

a. Device tag.

b. Relay-current transformer ratios; and tap, time-dial, and instantaneous pickup values.

c. Circuit-breaker sensor rating; and long-time, short-time, and instantaneous settings.

d. Ground-fault relay-pickup and time-delay settings.

3. Trip curves for all overcurrent protective devices in the system.

4. Trip curves for utility protective devices.

5. Coordination Curves: Time Current Curves (TCC) shall demonstrate selective coordination for all fault paths in the distribution system. TCC's shall graphically illustrate that adequate time separation exists between devices installed in series, including power utility company's upstream devices. Prepare separate sets of curves for the switching schemes and for emergency periods where the power source is local generation. Provide TCC for all fault paths in the system and terminate device characteristic curves at a point reflecting the maximum symmetrical or asymmetrical fault current to which the device is exposed.

6. Show the following information:

a. Device tag.

b. Voltage and current ratio for curves.

c. Three-phase and single-phase damage points for each transformer.

d. No damage, melting, and clearing curves for fuses.

e. Cable damage curves.

f. Transformer inrush points.

g. Motor starting curves.

h. Generator damage curves.

i. Maximum fault-current cutoff point.

F. Provide completed data sheets for setting of overcurrent protective devices bound in a 3-ring binder.

G. Provide electronic settings data file for all relays.

3.04 ARC-FLASH HAZARD ANALYSIS

A. Comply with NFPA 70E and its Annex D for hazard analysis study.

B. Use the short-circuit and coordination analysis results as input data.

C. Calculate maximum and minimum fault-current scenarios:

1. The minimum fault current scenario shall assume that the fault contribution from all sources is at a minimum and motor are not running.

2. The maximum calculation shall assume a maximum fault contribution from all sources and shall assume all motors are operating at full-load.

D. Calculate the arc-flash protection boundary and incident energy at all buses and locations in the electrical distribution system where personnel could perform work on energized parts.

E. Include medium- and low-voltage equipment locations. Safe working distances shall be specified for calculated fault locations based on the calculated arc-flash boundary, considering incident energy of 1.2 cal/sq.cm.

F. Incident energy calculations shall consider the accumulation of energy over time when performing arc-flash calculations on buses with multiple sources. Iterative calculations shall take into account the changing current contributions, as the sources are interrupted or decremented with time. Fault contribution from motors and generators shall be decremented as follows:

1. Fault contribution from induction motors should not be considered beyond three to five cycles.

2. Fault contribution from synchronous motors and generators should be decayed to match the actual decrement of each as closely as possible (e.g., contributions from permanent magnet generators will typically decay from 10 per unit to three per unit after 10 cycles).

G. Arc-flash computation shall include both line and load side of a circuit breaker as follows:

1. When the circuit breaker is in a separate enclosure.

2. When the line terminals of the circuit breaker are separate from the work location.

H. Base arc-flash calculations on actual overcurrent protective device clearing time. Cap maximum clearing time at two seconds based on IEEE 1584, Section B.1.2.

I. Indicate recommended personal protective equipment at all busses and equipment in the system.

3.05 POWER SYSTEM DATA

A. Obtain all data necessary for the conduct of the arc-flash hazard analysis:

1. Verify completeness of data supplied on the one-line diagram on Drawings. Call discrepancies to the attention of Engineer of Record.

2. For new equipment, use characteristics submitted under the provisions of action submittals and information submittals for this Project.

3. For existing equipment, whether or not relocated, obtain required electrical distribution system data by field investigation and surveys, conducted by qualified technicians and engineers.

B. Gather and tabulate the following input data to support coordination study. Comply with recommendations in IEEE 1584 and NFPA 70E as to the amount of detail that is required to be acquired in the field. Field data gathering shall be under the direct supervision and control of the engineer in charge of performing the study.

1. Product Data for overcurrent protective devices specified in other Sections and involved in overcurrent protective device coordination studies. Use equipment designation tags that are consistent with electrical distribution system diagrams,

overcurrent protective device submittals, input and output data, and recommended device settings.

2. Obtain electrical power utility impedance at the service.

3. Power sources and ties.

4. For transformers, include kVA, primary and secondary voltages, connection type, impedance, X/R ratio, taps measured in per cent, and phase shift.

5. For reactors, provide manufacturer and model designation, voltage rating and impedance.

6. For circuit breakers and fuses, provide manufacturer and model designation. List type of breaker, type of trip and available range of settings, SCCR, current rating, and breaker settings.

7. Generator short-circuit current contribution data, including short-circuit reactance, rated kVA, rated voltage, and X/R ratio.

8. For relays, provide manufacturer and model designation, current transformer ratios, potential transformer ratios, and relay settings.

9. Busway manufacturer and model designation, current rating, impedance, lengths, and conductor material.

10. Motor horsepower and NEMA MG 1 code letter designation.

11. Low-voltage cable sizes, lengths, number, conductor material and conduit material (magnetic or nonmagnetic).

12. Medium-voltage cable sizes, lengths, conductor material, and cable construction and metallic shield performance parameters.

3.06 LABELING

A. Apply arc-flash labels for all applicable electrical equipment including the following:

1. Utility service equipment.

2. Panelboards.

3. Disconnects.

4. Enclosed circuit breakers.

5. Automatic and manual transfer switches.

6. Motor-control centers.

7. Combination motor starters.

8. Low-voltage switchboards.

9. Switchgear.

10. Medium-voltage switches.

11. Control panels.

12. Transformer primary and secondary.

13. Load equipment such as HVAC equipment and any other equipment requiring servicing, adjustment or inspection while energized.

3.07 APPLICATION OF WARNING LABELS

A. After Sound Transit approval of the arc flash study, install the arc-fault warning labels under the direct supervision and control of the Arc Flash Study Specialist.

3.08 DEMONSTRATION

A. Engage the Arc-Flash Study Specialist to train Sound Transit's maintenance personnel in the potential arc-flash hazards associated with working on energized equipment and the significance of the arc-flash warning labels.

END OF SECTION

SECTION 26 08 00

COMMISSIONING OF ELECTRICAL SYSTEMS

NOTE TO DESIGNER:

SECTIONS WITH BRACKETS. E.G., [TEXT] ARE TO BE MODIFIED OR DELETED IF NOT APPLICABLE. ITALICIZED TEXT PROVIDES INSTRUCTION TO THE DESIGNER TO INCLUDE LANGUAGE ON SPECIFIC TOPICS WHEN APPLICABLE. THE INSTRUCTIONS ARE TO BE DELETED WHEN THE SPECIFICATION IS FINALIZED. LANGUAGE NOT IN BRACKETS IS TO BE USED 'AS IS' WITHOUT MODIFICATION OR WITH AN APPROVED SPECIFICATION MODIFICATION REQUEST.

DESIGNER TO DELETE TEXT ABOVE FOR FINAL SECTION

PART 1 - GENERAL

1.01 SUMMARY

A. Section excludes:

1. Requirements for train control house system electrical equipment and traction power substation commissioning as this is governed under Section 01 91 13 - General System Testing and Commissioning Requirements.

B. Section includes:

1. Requirements for commissioning process requirements for electrical systems:

a. Level 1 commissioning activities for electrical systems.

b. Level 2 commissioning activities for electrical systems.

c. Support for Level 3 commissioning activities related to electrical systems.

d. Support for Level 4 commissioning activities related to electrical systems.

e. Providing qualified personnel to assist in commissioning tests.

f. Providing equipment, materials, and labor necessary to correct issues found during the commissioning process, which fulfill contract and warranty requirements.

1.02 REFERENCES

A. This Section incorporates by reference in individual sections of Division 26 the latest revisions of the following documents and standards. Refer to individual specification sections for greater detail:

1. NACE International.

2. Institute of Electrical and Electronic Engineers (IEEE).

3. National Fire Protection Association (NFPA).

4. International Electrical Testing Association (NETA).

5. National Institute of Standards and Technology (NIST).

6. Underwriters Laboratories (UL).

7. American National Standards Institute (ANSI).

8. National Electrical Manufacturer's Association (NEMA).

9. ASHRAE Guideline 0-2005, The Commissioning Process (including Amendments)

B. Definitions:

1. Refer to Section 01 91 13 - General System Testing and Commissioning Requirements for commissioning definitions.

1.03 COORDINATION

A. Refer to Section 01 91 13 - General System Testing and Commissioning Requirements for general coordination requirements related to commissioning.

1.04 COMMISSIONING ACTIVITIES

A. Commissioning work furnishes labor and material to accomplish building commissioning as specified in the Contract Documents and in this specification, including:

1. Review General Requirements outlined in Section 01 91 13 - General System Testing and Commissioning Requirements.

2. Provide to the Sound Transit Testing and Commissioning Manager preliminary operations and maintenance information for submittal.

3. Assist the Sound Transit Testing and Commissioning Manager in developing commissioning activity procedures and data forms submittals for work specified in this Section.

4. Provide information to the Testing and Commissioning Manager needed for control interface wiring diagrams submittals for the work of this Section.

5. Perform Level 1 commissioning activities specified in this Section, including installation verification, static tests, start-up, component tests, equipment tests, systems tests.

6. Perform Level 2 commissioning activities specified in this Section, including intra-station system interface tests.

7. Provide support for Level 3 commissioning activities, including jointly with the communications system contractor field testing points in the interface terminal strips, being present during level 3 testing with sufficient labor and support personnel to adjust equipment and troubleshoot system failures that might arise. When material or equipment provided by this Division is found to be in conflict with specified criteria, adjust or replace said material or equipment, with the assistance of manufacturer as needed.

8. Provide support for Level 4 commissioning activities, including providing sufficient labor and support personnel to adjust equipment and troubleshoot system failures that might arise during pre-revenue testing.

9. Operate equipment and system during commissioning activities as required by the Testing and Commissioning Manager.

10. Perform and document commissioning tests to verify readiness for commissioning test demonstration. Commissioning tests are specified in this specification.

11. Correct issues and repeat commissioning tests when results do not meet acceptance criteria.

12. Perform commissioning test demonstration specified in this specification to verify acceptable performance.

13. Record and submit commissioning test demonstration data and issues.

14. Correct issues and repeat commissioning test demonstration when results do not meet Acceptance Criteria.

15. Attend commissioning meetings as requested by the Sound Transit Testing and Commissioning Manager.

16. Report any inconsistencies or issues in system operations or performance.

17. Provide personnel to support commissioning test demonstration specified in this specification as requested by the Sound Transit Testing and Commissioning Manager.

18. In the event that a commissioning test demonstration fails, assist in determining the cause of failure. Make corrections.

19. Cooperate with Testing and Commissioning Manager to make equipment and systems ready for commissioning tests specified in this specification as early in the construction schedule as possible.

20. Provide factory start-up services for key equipment and systems specified in Division 26. Coordinate this work with the manufacturer and the Testing and Commissioning Manager.

21. Complete all phases of work so the system can be started, tested, balanced, and otherwise commissioned. Division 26 has start-up responsibilities with obligations to complete systems, including all sub-systems so they are functional. This includes the complete installation of all equipment and materials per the contract documents and related directives, clarifications, change orders.

22. Commissioning is intended to begin upon completion of a system. Commissioning may proceed prior to the completion of systems and sub-systems, if expediting this work is in the best interests of Sound Transit. Commissioning activities and schedule will be coordinated with the Contractor. Start of commissioning before system completion will not relieve the Contractor from completing those systems.

B. Cooperate with the Sound Transit Testing and Commissioning Manager to accomplish commissioning work on schedule and in coordination with other trades.

1.05 QUALITY ASSURANCE

A. Coordinate completion of Installation Verification forms, by the Quality Control Inspector, as identified in the Contractors Quality Control Inspection and Test Plan.

1.06 LABELS

A. Upon completion of tests by a testing firm, a NETA label shall be attached to all serviced devices. These labels shall indicate date serviced and the testing company.

PART 2 - PRODUCTS

2.01 TEST EQUIPMENT

A. Provide test equipment and instrumentation, including consumable supplies, required to execute commissioning activities. Unless noted otherwise, test equipment and instrumentation remain the property of the Contractor.

B. Standard certified test equipment for commissioning shall be provided by Division 26.

2.02 PROPRIETARY TEST INSTRUMENTS

A. Provide proprietary test instruments or tools required by the equipment manufacturer. Provide and operate the proprietary test instruments or tools as required for commissioning work.

PART 3 - EXECUTION

3.01 PARTICIPATION IN COMMISSIONING

A. Provide skilled technicians to start-up and debug all systems with the division of work. These same technicians shall be made available to assist the Sound Transit Testing and Commissioning Manager in completing the commissioning program as it relates to each system and their technical specialty. Work schedules and time required for testing shall be requested and coordinated by the Sound Transit Testing and Commissioning Manager. Contractor shall ensure the qualified technician(s) are available and present during the agreed-upon schedules and of sufficient duration to complete the necessary tests, adjustments, and problem resolutions.

3.02 LEVEL 1 COMMISSIONING ACTIVITIES REQUIREMENTS

A. Level 1 commissioning activities scope: Technical requirements for commissioning of electrical systems are specified in this specification.

B. Provide technicians, instrumentation, and tools to perform commissioning activities in accordance with accepted commissioning activity procedures at the direction of the Sound Transit Testing and Commissioning Manager.

C. Scope of electrical systems commissioning activities applies to all portions of the electrical systems installation described in the test.

D. Preparation:

1. Certify that electrical systems, subsystems, and equipment have been completed, calibrated, and started; and are operating in accordance with Contract Documents.

2. Ensure that all enclosures for electrical equipment are clean and debris free.

3. Ensure that all enclosures for electrical equipment or conductors that are located in public and non-secure spaces have covers that are secured with the appropriate tamperproof, uniquely keyed fastener.

4. Ensure that all enclosures for electrical equipment or conductors have identification nameplates.

5. Testing Instrumentation: Install measuring instruments and logging devices to record test data in accordance with accepted commissioning test procedures as directed by the Testing and Commissioning Manager.

6. Certify that electrical systems instrumentation and control systems have been completed and calibrated; are operating according to the Contract Documents; and that pretest set points have been recorded.

7. Set systems, subsystems, and equipment into operating mode to be tested (e.g., normal shut down, normal auto position, normal manual position, unoccupied cycle, emergency power, and alarm conditions) in accordance with accepted commissioning test procedures as directed by the Testing and Commissioning Manager.

E. Test all operating modes, interlocks, control responses, responses to abnormal or emergency conditions, and verify proper response of building automation system controllers and sensors.

F. Tests will be performed using design conditions whenever possible.

G. Simulated conditions may need to be imposed using an artificial load when it is not practical to test under design conditions. Provide equipment to simulate loads. Set simulated conditions in accordance with accepted commissioning test procedures as directed by the Testing and Commissioning Manager. Document simulated conditions and methods of simulation. After tests, return settings to normal operating conditions.

H. Request approval to alter set points when simulating conditions is not practical.

I. Request approval to alter sensor values with a signal generator when design or simulating conditions and altering set points are not practical.

J. If tests cannot be completed because of a deficiency outside the scope of the electrical system, document the deficiency and report it to the Resident Engineer. After deficiencies are resolved, reschedule tests.

3.03 LEVEL 1 AND LEVEL 2 COMMISSIONING ACTIVITY PROCEDURES

A. Submit level 1 commissioning activity test procedures and data forms for the following types of commissioning activities, requirements for which are specified in this specification:

1. Level 1 commissioning activities:

a. Installation verification

b. Static tests

c. Start-up procedures

d. Component tests

e. Equipment tests

f. System tests

g. [*Review identified IV's, E and S tests and add or modify as necessary based on location design for envelope systems]*

B. Cooperate with the Testing and Commissioning Manager to develop level 2 commissioning activity test procedures and data forms related to the work of this Division. Provide information as needed, including interfaces with equipment and systems installed by others:

1. Level 2 commissioning activities:

a. Intra-station system interface tests.

[Review identified IV's, E and S tests and add or modify as necessary based on location design for envelope systems]

3.04 LEVEL 1 INSTALLATION VERIFICATION REQUIREMENTS

A. Scope: Installation verification checklists are required for the following, at minimum:

1. 2608-IV-01 Power wires, conductors, and cables:

a. Low voltage.

b. Medium voltage.

2. 2608-IV-02 Grounding and bonding for electrical systems.

3. 2608-IV-03 Transformers:

a. Low voltage transformers.

b. Dry-type medium voltage transformers.

4. 2608-IV-04 Medium voltage metal clad switchgear.

5. 2608-IV-05 Switchboards.

6. 2608-IV-06 Panelboards.

7. 2608-IV-07 Circuit breakers:

a. Molded-case Circuit Breakers (60 amps and above, 3-phase).

b. Low Voltage Power Circuit Breakers.

c. Medium Voltage Power Circuit Breakers.

8. 2608-IV-08 Motor control centers.

9. 2608-IV-09 Motor Control Equipment (FVNR, Soft-Start and VFD).

10. 2608-IV-10 Protective Device Relays.

11. 2608-IV-11 Instrument Transformers.

12. 2608-IV-12 Metering and Instrumentation.

13. 2608-IV-13 Central battery inverter.

14. 2608-IV-14 Batteries.

15. 2608-IV-15 Static uninterruptible power supply.

16. 2608-IV-16 Lighting systems:

    a. Exterior lighting systems:

        1) Verify the CCT (correlated color temperature).

    b. Interior lighting systems:

        1) Verify the CCT (correlated color temperature).

    c. Exit Sign.

    d. Lighting Control Panels.

    e. Control devices:

        1) Occupancy sensor.

        2) Vacancy sensor.

        3) Daylighting Controls.

        4) Photocell.

        5) Manual light switch.

17. 2608-IV-17 Photovoltaic Collectors.

18. 2608-IV-18 Electric Vehicle charging systems.

    [Designer: verify the Project Requirements for types of EV Charging Station and installation requirements.]

19. 2608-IV-23 Transfer Switches:

    a. Manual Transfer Switch.

    b. Automatic Transfer Switch.

20. 2608_IV-24 Enclosed Switches, Fuses and Disconnects.

21. 2608_IV-25 Generators:

    a. Standby Generator.

    b. Generator's plug receptacle.

    [Designer: Review identified systems and add to list or modify as necessary based on location design for fall-arrest systems. Coordinate with 11 24 29.]

B. Installation Verification Scope: Technical requirements for Installation Verification of electrical systems are specified in this specification.

C. Installation verification checklist forms shall include the following:

1. Organized to prompt the installer to check off quality criteria for each discrete portion of the Work.

2. Identify the system or features to which the installation verification checklist applies at the top of the form.

3. Section for verification of delivery of accepted materials.

4. Section for condition of materials at delivery.

5. Section for description of installation steps. Include manufacturer's installation instructions.

6. Space at the end of the form for the installer to print their name and company name, fill in the date, and sign or initial.

7. Space at the end of the form for the Quality Control inspector designated for the scope to review and accept installation verification. QC Inspector must perform Install Verification and verify each element identified in form has been reviewed for conformance with contract documents and in accordance with the Contractors Quality Control Inspection and Test Plan as part of Section 01 45 00 - Quality Assurance/Quality Control.

8. Space to identify the area of work for which the installer is executing the Installation Verification Checklist.

9. Description of the quality criteria as it pertains to the specific work. Include a checkbox for each criterion.

D. Quality Criteria: Installation verification checklists shall address the following quality criteria:

1. Make and model match accepted submittals.

2. Equipment is installed without visible damage.

3. Location is as indicated on Contract Drawings.

4. Equipment is accessible for maintenance using safe work practices.

5. There is sufficient space to remove and replace components intact without demolishing other work.

6. Identification of components is legible and located to be visible.

E. Fill out and sign installation verification checklists for electrical systems while the Work is being installed. The intent is for the installing tradesperson to fill out and sign the installation verification checklist as work proceeds to improve the quality of the installation. Retain completed installation verification checklists on site for review.

F. Before performing a commissioning test, installation verification checklists must be performed and completed by QC inspector designated for the appropriate area specified here in and within the Contractors Quality Control Inspection and Test Plan as part of 01 45 00. Submit completed installation verification checklists for work included in the commissioning test.

3.05 LEVEL 1 STATIC TESTS

A. 2608-ST-01: Insulation Resistance:

1. System/Equipment to be tested:

a. Insulation of conductors rated 100 amperes or greater.

b. Insulation of conductors for all motor loads.

c. Insulation of heat trace conductors.

[Designer: Include Heat Trace Conductor as a ST test based upon coordination with Mech/fire about applicability of Heat Trace].

2. Functions to be tested:

a. Insulation resistance.

3. Conditions of the Test:

a. Perform insulation resistance test on each conductor with respect to ground and adjacent conductors. Applied potential shall be 500 volts DC for 300 volt rated cable and 1000 volts DC for 600 volt rated cable.

b. Test duration shall be one (1) minute.

c. Include in Static Test Procedures and Data Forms submittal.

d. Test conditions for heat trace per manufacturer's test procedures.

4. Acceptable Results:

a. Insulation resistance tests shall meet the requirements of Exhibit A, Table 26 08 00 - A3.

b. Heat trace acceptance values per manufacturer's test procedures.

B. 2608-ST-02: Bolted Connection Torque:

1. System/Equipment to be tested:

a. Bolted connections for conductors rated 100 amperes or greater.

2. Functions to be tested:

a. Bolted connection torque.

3. Conditions of the Test:

a. Perform torque test for each conductor tested and terminated in an overcurrent device or bolted type connection.

b. Include in Static Test Procedures and Data Forms submittal.

4. Acceptable Results:

a. Bolted connection torque values shall meet the manufacturer's published values or the requirements of Exhibit A, Table 26 08 00 - A2.

b. Record the Acceptable Results for O&M documentation.

C. 2608-ST-03: Ground Resistance:

1. System/Equipment to be tested:

a. Grounding resistance.

b. Reference: Grounding and bonding for electrical systems as stated in the Contract Documents.

2. Functions to be tested:

a. Grounding resistance.

b. Ground continuity.

3. Conditions of test:

a. Test the grounding system by the fall-of-potential method.

4. Acceptable Results:

a. Station grounding system: 10 ohms, maximum.

b. Communications and Train Control System grounding electrode: 25 ohms, maximum.

c. Traction Power Substation: 5 ohms, maximum.

d. Tie Station grounding electrode: 5 ohms, maximum.

e. OCS Foundation: 25 ohms, maximum.

f. OCS Foundation with surge arrester: 5 ohms, maximum.

D. 2608-ST-04: Lighting Systems Illuminance Levels:

1. Equipment/Systems to be tested:

a. Lighting Levels throughout.

1) Normal circuits.

2) Emergency circuits.

b. Lighting Levels with dimming, occupancy, and daylighting sensor.

1) Normal circuits.

2) Emergency circuits.

2. Functions to be tested:

a. Measure footcandle levels at random locations of the floor area. Include area outlined in Table 1007-4, Table 1007-5, and Table 1007-6 in the Requirements Set 1007.

b. Measurements shall be taken to the following areas specified in the Table 1007-4, Table 1007-5, and Table 1007-6 in the Requirement Set 1007 and documented.

[Designer: apply only areas that applicable.]

3. Conditions of Test:

a. Areas are complete, cleaned, and no obstructions such as construction debris where the light measurement will be taken from.

b. For exterior lighting, measurement must be taken when sky is completely dark.

c. Measurement must be taken between light fixtures, and not under the light fixture:

1) Few measurements must be taken when the light level requirement specified average.

4. Acceptable Results:

a. Light levels meet the requirement specified in the Table 1007-4, Table 1007-5, and Table 1007-6 in the Requirements Set 1007.

[Designer: apply only areas that applicable.]

b. Provide floor plan and indicates where the measurement is taken.

E. 2608-ST-05: Circuit Continuity and Phase Relationship:

1. Equipment/Systems to be tested:

a. Branch circuits and feeders throughout.

2. Functions to be tested:

a. Measure circuit continuity, phasing, and phase rotation at random locations of the floor area. Measurements shall be taken at the following areas and documented.

1) All lighting circuits.

a) Normal circuits.

b) Emergency Egress circuits.

2) All power branch circuits:

a) Normal circuits.

b) Emergency or Critical circuits.

3) Elevator Machine and Escalator Motor Feeders.

4) Electrical Rooms Switchboard and Panelboard Feeders.

5) Mechanical Room HVAC and Plumbing Feeders.

6) Ancillary Room Equipment Feeders.

7) Generator Feeder.

8) UPS Feeders.

9) VFD Feeders.

10) Photovoltaic System Feeders.

11) Electric Vehicle Feeders.

3. Conditions of Test:

a. Areas are complete and cleaned.

4. Acceptable Results:

a. The Contractor shall test all electrical feeders and exterior branch circuits whose operating voltage is 600 volts or less that are installed under this contract and exterior branch circuits. The Testing and Commissioning Manager shall verify tests and submit a test report.

b. Test for continuity of each circuit.

c. Phase Relationship Tests: Check connections to all new and existing equipment for proper phase and phase rotation relationship. During check, disconnect all devices which could be damaged by the application of voltage or reversed phase sequence.

3.06 LEVEL 1 COMPONENT TESTS

A. 2608-C-01: Instrument Transformers:

1. Systems/Equipment to be tested:

a. Current Transformers.

b. Potential Transformers.

2. Functions to be tested:

a. Insulation resistance.

b. Ratio verification.

c. Polarity.

d. Transformer withdrawal mechanism.

e. Phase rotation.

f. Fuse sizes on primary and secondary on potential transformers.

g. Interlock function and contact operation.

h. Grounding and shorting connections.

i. Secondary voltage.

j. Secondary wiring integrity.

3. Conditions of test – Current Transformers:

a. Perform insulation resistance test of the current transformer and current transformer wiring to ground at 500 volts DC for 30 seconds. Disconnect ground connection at ground connection point in the circuit for this test. Do not perform on solid-state devices.

b. Perform a polarity test of each current transformer.

c. Perform a ratio verification test of each current transformer. This shall be performed using the voltage method or current method in accordance with IEEE C57.13.2.

d. Perform a DC dielectric withstand ability test on the primary windings with the secondary windings connected to ground.

4. Conditions of test – Potential Transformers:

   a. Perform insulation resistance tests on voltage transformers, winding-to-winding, and windings-to-ground.

   b. Perform a polarity test on each transformer to verify the polarity marks or H1-X1 relationship. The test may be performed with a TTR type ratio set.

   c. Perform a ratio test using a Transformer Turns Ratio (TTR) test set or by the voltage comparison method.

   d. Perform a DC dielectric withstand ability test on the primary windings with the secondary windings connected to ground.

   e. Verify secondary voltage by energized the primary winding with system voltage. Measure secondary voltage with the secondary wiring disconnected.

   f. Perform secondary wiring integrity test. Disconnect transformer at secondary terminals and connect secondary wiring to proper secondary voltage.

5. Acceptable Results – Current Transformers:

   a. Insulation resistance test voltages and minimum resistances shall be in accordance with Exhibit A, Table 26 08 00 – A3, in this specification. Do not perform this test where solid state devices are utilized.

   b. Polarity is verified correct.

   c. Ratios are verified correct.

   d. DC dielectric withstand ability is in accordance with Paragraph 8.8.2 and Tables 2 and 7 of ANSI/IEEE C57.13-1993 (Standard Requirements for Instrument Transformers).

6. Acceptable Results – Potential Transformers:

   a. Insulation resistance test voltages and minimum resistances shall be in accordance with Exhibit A, Table 26 08 00 – A3. Do not perform this test where solid state devices are utilized.

   b. Polarity is verified correct.

   c. Ratios are verified correct.

   d. DC dielectric withstand ability is in accordance with Paragraph 8.8.2 and Tables 2 and 7 of ANSI/IEEE C57.13-1993 (Standard Requirements for Instrument Transformers).

   e. Secondary voltage is verified correct.

   f. Proper potential at all devices.

B. 2608-C-02: Metering and Instrumentation:

1. Systems/Equipment to be tested:

   a. Meters:

1) Connection to Sound Transit, see Section 25 08 00 – Commissioning of Field Control System.

2. Functions to be tested:

a. Calibration at all cardinal points.

b. Instrument multipliers.

c. Tightness of electrical connections.

3. Conditions of test:

a. Verify accuracy of meters at all cardinal points

b. Verify all instrument multipliers.

c. Verify that current transformer and voltage transformer circuits are intact.

4. Acceptable Results:

a. Meter accuracy is verified correct.

b. Instrument multipliers are correct for application.

3.07 LEVEL 1 EQUIPMENT TESTS

A. 2608-E-01: Molded Case Circuit Breakers

1. System/Equipment to be tested:

a. Molded case circuit breakers serving switchboards, distribution panelboards, panelboards, central battery inverters, UPS, elevators, escalators, and mechanical equipment.

b. 3-phase molded case circuit breakers 60 amperes and greater.

2. Functions to be tested:

a. Contact resistance.

b. Insulation resistance.

c. Verification of adjustments for final settings.

d. Tightness of electrical connections.

e. Performance characteristics of trip units based on coordination studies.

3. Conditions of the test:

a. Perform a contact resistance test or millivolt drop across contacts at rated current.

b. Perform an insulation resistance test from pole-to-pole and from each pole-to-ground with breaker closed and across open contacts of each phase per Exhibit A, Table 26 08 00 – A3.

c. Perform adjustments for final settings in accordance with Coordination Study supplied by Contractor.

d. Perform primary current injection tests to ensure performance characteristics of trip units.

e. Check trip unit reset operation.

4. Acceptable Results:

a. Compare microohm or millivolt drop values to adjacent poles and similar breakers. Investigate, correct and re-test deviations of greater than 50 percent.

b. Insulation resistance shall be per Exhibit A, Table 26 08 00 - A3

c. All instantaneous trip times shall fall within manufacturer's time-current curves or use NEMA Standard AB4-1991 Table 5-3. Circuit breakers exceeding specified trip time at 300 percent of pickup shall be tagged defective.

d. Trip unit setpoints match those listed in the final Short Circuit/Coordination/Arc Flash study report.

B. 2608-E-02: Medium Voltage Power Circuit Breakers

1. System/Equipment to be tested.

a. Medium voltage power circuit breakers.

2. Functions to be tested.

a. Test in compliance with the manufacturer's recommendation.

b. Test per Section 26 13 13 - Medium-Voltage AC Circuit Breaker Switchgear, Articles 2.11 and 2.13.

3. Acceptable results

a. Complies with manufacturer's recommendations.

b. All results in accordance with IEEE C37.20.2, IEEE C37.09. and IEEE C57.13.

C. 2608-E-03: Low Voltage Power Circuit Breakers

1. System/Equipment to be tested.

a. Low voltage power circuit breakers serving switchboards, distribution panelboards, panelboards, central battery inverters, UPS, elevators, escalators, and mechanical equipment.

b. Low voltage power circuit breakers 60 amperes and greater.

2. Functions to be tested:

a. Contact resistance.

b. Insulation resistance.

c. Verification of adjustments for final settings.

d. Tightness of electrical connections.

e. Long-time pickup and Long-time delay time-current characteristics.

f. Short-time pickup and delay.

g. Ground fault pickup and delay.

h. Operation of any auxiliary features such as trip and pickup indicators, zone interlocking, electrical close and trip operation, trip-free, and anti-pump function.

i. Trip unit reset operation based on coordination studies.

3. Conditions of the test:

a. Perform a contact resistance test or millivolt drop across contacts at rated current.

b. Perform an insulation resistance test from pole-to-pole and from each pole-to-ground with breaker closed and across open contacts of each phase per Exhibit A, Table 26 08 00 – A3.

c. Perform primary current injection tests to ensure performance characteristics of trip units.

d. Using the settings from the final Coordination Study, perform long-time pickup and long-time delay time-current characteristic tests by passing 300 percent rated current through each pole separately.

e. Using the settings from the final Coordination Study, determine short-time pickup and short-time delay by primary current injection.

f. Using the settings from the final Coordination Study, determine instantaneous pickup by primary current injection using run-up or pulse method.

g. Using the settings from the final Coordination Study, determine ground fault pickup and time delay by primary current injection.

h. Verify the correct operation of any auxiliary features such as trip and pickup indicators, zone interlocking, electrical close and trip operation, trip-free, and anti-pump function.

i. Check trip unit reset operation.

j. Check key and other interlock safety devices for operation and sequence. Make closing attempts on locked-open and opening attempts on locked-closed devices including barriers and shutters.

k. Test the correct operation of the electrical lockout feature on the tie breaker.

4. Acceptable Results:

a. Compare microohm or millivolt drop values to adjacent poles and similar breakers. Investigate, correct and re-test deviations of greater than 50 percent.

b. Insulation resistance values shall be per Exhibit A, Table 26 08 00 - A3

c. Instantaneous pickup value shall be per NEMA Publication AB4-1991, Table 5-4.

d. Trip characteristics of breakers shall fall within manufacturer's published time current tolerance band including all adjustment factors.

e. Trip unit setpoints match those listed in the final Short Circuit/Coordination/Arc Flash study report.

D. 2608-E-04: Ground Fault Protection System

1. System/Equipment to be tested:

a. Ground Fault Protection System.

2. Functions to be tested:

a. Adjustable trip and time delay functions.

b. Trip unit reset operation.

c. Circuit interrupting device.

d. Relay pickup current.

e. Relay time delay.

f. Ground monitor panel where applicable.

g. Sensor polarity on phase and neutral sensors.

h. Indicator lights and flags.

3. Conditions of test:

a. Set the adjustable trip and time delay functions based on the data generated from the ground fault system study.

b. Verify trip unit reset operation.

c. Test correct response of the circuit interrupting device by using ground sensor current injection to measure Relay pickup current.

d. Test correct response of the circuit interrupting device by using ground sensor current injection to measure Relay Time Delay. (Measure at two values above pickup current).

e. Verify proper sensor polarity on phase and neutral sensors.

f. Functionally check operation of ground fault indicator lights and flags for correct indication of ground fault trip.

4. Acceptable Results:

a. Trip unit resets properly.

b. Adjustable trip and time delay functions correspond to settings generated in the ground fault system study.

c. Circuit interrupting device operates properly.

d. Ground fault indicator lights and flags operate properly.

e. Trip unit setpoints match those listed in the final Short Circuit/Coordination/Arc Flash study report.

E. 2608-E-05: Dry Type Medium Voltage Transformers

1. Systems/Equipment to be tested:

a. Dry type transformers.

2. Functions to be tested:

a. Insulation resistance.

b. Reference: Low voltage transformers requirements as stated in the Contract Documents.

3. Conditions of test:

a. Perform insulation resistance test. Measurements shall be made from winding-to-winding and winding-to-ground.

4. Acceptable Results:

a. Test voltages and minimum resistances shall be in accordance with Exhibit A Table 26 08 00 - A1. Results to be temperature corrected in accordance with Exhibit A Table 26 08 00 - A4.

b. Verify and record taps and connect transformer to desired tap.

c. Verify correct phase rotation.

F. 2608-E-06: Switchboards

1. System/Equipment to be tested:

a. Switchboards.

b. Distribution Panelboards.

c. Branch Circuit Panelboards.

2. Functions to be tested:

a. Insulation resistance.

b. Phase rotation.

c. Reference: Switchboard requirements as stated in the Contract Documents.

3. Conditions of test:

a. Perform insulation resistance test phase-to-phase and phase-to-ground of each bus section.

4. Acceptable Results:

a. Insulation resistance test voltages and minimum resistances shall be in accordance with Exhibit A, Table 26 08 00 - A3.

b. Phase rotation shall be compatible with the serving utility.

G. 2608-E-07: Motor Control Equipment:

1. Systems/Equipment to be tested:

a. Motor starters.

b. Enclosed motor controllers (general purpose, across-the-line starters).

c. Variable Frequency Drives.

2. Functions to be tested (All motor control equipment):

a. Insulation resistance.

b. Overload unit operation with setpoint per service factor, FLA and NEC Article 430.

c. Control devices.

d. Phase rotation.

3. Additional Functions to be tested (Variable Frequency Drives):

a. Check motor rotation when operating on the drive and the bypass.

b. Verify Critical frequencies to be avoided (jumped) during operation by varying speed from minimum to maximum and observing motor for unusual vibration and noise.

c. Operate from remote start-stop and speed control signals.

4. Conditions of test:

a. Measure insulation resistance of each starter phase-to-phase and phase-to-ground with the starter contacts closed and the protective device open.

b. Measure insulation resistance of each control circuit with respect to ground.

c. Verify and confirm the motor requirement specified in Division 22 and Division 23 Commissioning specification.

d. Test motor overload units (except solid-state type) by injecting primary current through overload unit and monitoring trip time at 300 percent of motor full load current.

e. Perform operational tests by initiating control devices to affect proper operation.

f. Verify installation in accordance with manufacturer's instructions and in accordance with visual and mechanical inspection requirements.

g. VFD programmable parameter settings established.

h. VFD jump frequency settings coordinated.

i. VFD power failure recovery restart settings coordinated.

5. Acceptable Results:

a. Insulation resistance test voltages and minimum resistances shall be in accordance with manufacturer's published data. Manufacturer shall be consulted for test voltage where solid state devices are utilized.

b. Overload tests shall be in accordance with manufacturer's tolerances. Investigate values more than 120 seconds.

c. Phase rotation shall be compatible with the serving utility.

d. Installation in compliance with manufacturer's procedures and criteria.

e. VFD parameter settings reviewed and signed off by HVAC and electrical contractors. Record all settings for use by Sound Transit.

f. VFD jump settings reviewed and signed off by HVAC and electrical contractors. Record all settings for use by Sound Transit.

g. VFD power failure recovery restart settings reviewed and signed off by HVAC and electrical contractors. Record all settings for use by Sound Transit.

h. Following successful completion of testing specified for Soft Start motors outlined in commissioning of HVAC systems as stated in the Contract Documents, record all settings for use by Sound Transit.

H. 2608-E-08: Receptacles:

1. Equipment to be tested:

a. Receptacles standard.

b. Receptacles Ground Fault Circuit Interrupter (GFCI).

2. Functions to be tested:

a. Open ground.

b. Reverse polarity.

c. Open hot.

d. Open neutral.

e. Hot and ground reversed.

f. Ground Fault Receptacle Circuit Interrupter when so equipped.

3. Conditions of the test:

a. Perform all tests with adjustable GFCI and circuit tester.

b. GFCI TEST button on receptacle not acceptable for test.

4. Acceptable Results:

a. Tester indicates correct wiring.

b. GFCI trips on ground fault current 5 milliamperes or greater.

c. GFCI does not trip on ground fault current less than 5 milliamperes.

I. 2608-E-09: Interior Lighting Control Devices

1. Systems/Equipment to be tested for both normal and emergency circuits in interior application:

   a. Manual Light Switch:

      1) 3-way Light Switch.

   b. Occupancy Sensors (ceiling or wall mount).

   c. Vacancy Sensors (ceiling or wall mount).

   d. Daylighting Sensors (integral or external to the light fixture).

   e. Motion Sensors (integral or external to the light fixture).

2. Functions to be tested:

   a. Manually turns light on and off:

      1) 3-way light switch manually turns light on and off.

   b. Automatic control of lighting fixtures.

   c. Manual override of automatic function.

3. Conditions of the test:

   a. Verify all settings of the sensors match the controls sequence of operation and record all settings.

   b. For manual light switch:

      1) Manually turns lights on when manual light switch toggle to ON position.

      2) Manually turns lights off when manual light switch toggle to OFF position.

      3) For 3-way light switches, manually turns lights on when one of the manual light switch toggles to ON position. Then manually turns lights off when the other manual light switch toggles to OFF position. Then reverse the test from one manual light switch to another manual light switch.

   c. For occupancy sensor:

      1) After device has timed out, walk into the space to verify initial response to sensing occupancy.

      2) Leave space to verify response to the unit not sensing occupancy for a certain amount of time that lights turn off.

      [Designer: when occupancy sensor has dual sensor such as passive-infrared (PIR) sensor, ultrasonic sensor, dual-technology sensor, microwave sensor, or acoustic sensors specified in the controls sequence of operation, then test the sensor separately. Sensor not specified above must test according to manufacturer's recommendation.]

d. For vacancy sensor:

1) Manually turns lights on.

2) Leave space to verify response to the unit not sensing occupancy for a certain amount of time that lights turn off.

e. Operate light switches to verify response.

f. For Daylighting Sensor:

1) Check placement of the daylight sensor.

2) Testing must be done during the daytime and nighttime.

a) Daytime test, test the dimming ability of the sensor when outside daylight shines upon the room.

b) Nighttime test, test the brightening ability of the sensor when there is no outside daylight available.

3) Test with varying amount of light into the daylighting zones.

4) Test the footcandle minimum illumination of the fixtures at maximum dimming when there is no sunlight coming into the daylighting zones.

5) When necessary, relocated and calibrated the sensor to track interior daylight levels.

g. Motion sensors:

1) Test the function of the motion sensor switching capability for lights to dim when sensor do not detect any movement.

2) Test the function of the motion sensor when sensor detects movement, light turns back to 100 percent.

4. Acceptable Results:

a. For manual light switch, turn lights on when light switch toggles to ON position and turn lights off when light switch toggles to OFF position.

1) Similar concept in 3-way manual light switches.

b. Occupancy Sensor:

1) Occupancy sensors turn on selected light fixtures upon first entering the room.

2) Initially the occupancy sensor will turn off the light fixtures but will automatically turn the light fixtures back on after occupancy sensor detects movement.

3) Occupancy sensor turns lights off per setting specified in the control sequence of operation.

4) Upon the sensor not sensing occupancy for the timed delay duration, the device automatically turns off the room light fixtures.

5) The sensor is not affected by HVAC noise or heat or other external factors that would prevent the fixtures from turning off automatically when there is no occupancy for the set time-out duration.

c. Vacancy Sensor:

1) Vacancy sensors require that the occupant manually turn on the light switch when first entering the room.

2) Prior to the sensor timing out, the light switch can be turned to the OFF position to turn the lights off within the room and the lights will remain off when the occupant enters the room.

3) Vacancy sensor turns light off per setting specified in the control sequence of operation.

d. Daylighting Sensor:

1) All required fixtures within the daylighting zones dim with more sunlight into the zone.

2) All required fixtures within the daylighting zone brighten as sunlight into the zone diminishes.

3) The primary zone fixtures dim first and reach minimum lighting levels prior to the secondary zone fixtures dimming and reaching their minimum lighting levels.

4) The space lighting levels do not dim to less than the design required minimum footcandle levels within the daylighting zones.

e. Motion Sensor:

1) Lights automatically reduced when there is no activity detected within the lighting zone.

2) Lights automatically turns back to 100 percent when there is activity detected within the lighting zone.

3) Dimming percent and time for no detection based on the control sequence of operation.

J. 2608-E-10: Exterior Lighting Control Devices

1. Systems/Equipment to be tested for exterior application for normal and emergency lighting:

a. Motion Sensor (integral or external to the light fixture)

b. Photocell.

c. Lighting control time clocks (relay control panels)

2. Functions to be tested:

a. Automatic control of lighting loads.

b. Manual override of automatic function.

c. Relay status

d. Schedule modifications

e. Network Interface

3. Conditions of the test:

a. Verify all settings of the sensors match the controls sequence of operation and record all settings.

b. Motion Sensor:

1) Test the function of the motion sensor switching capability for lights to dim when sensor do not detect any movement.

2) Test the function of the motion sensor when sensor detects movement, light turns back to 100 percent.

c. Photocell:

1) Photocell must be clean and free of debris.

2) Test the function of the sensor switching capability for lights off during daytime and lights on during the nighttime or dust-to-dawn.

4. Acceptable Results:

a. Motion Sensor:

1) Lights automatically reduced when there is no activity detected within the lighting zone.

2) Lights automatically turns back to 100 percent when there is activity detected within the lighting zone.

3) Dimming percent (%) and time for no detection based on the control sequence of operation.

b. Photocell:

1) All required lights turn off during daytime and lights turns on during nighttime or dust-to-dawn function.

c. Lighting Control time clocks (relay controls).

1) Demonstrate automatic control via controller CPU to schedule the exterior fixtures and lighting circuits on and off based on a built-in astronomical clock schedule.

2) Manually override all automatic functions to control lights regardless of time-of-day schedule or daylight control requirement.

3) Verify relay status.

4) Demonstrate time control and the ability to modify schedules.

5) Demonstrate override control of the light control system via the network lighting controller.

K. 2608-E-11: Egress Fixtures and Exit Signs

1. Systems/Equipment to be tested:

   a. Egress fixtures and exit signs.

2. Functions to be tested:

   a. Operation under facility normal electrical power service

   b. Operation under facility emergency electrical power service via central battery inverter.

3. Conditions of the test:

   a. Verify location of egress fixtures and exit signs match the Contract Document.

   b. Facility is served by normal electrical power source.

   c. Simulate loss of facility normal electrical power source by switching off main normal power to the building at the main entrance switchgear.

4. Acceptable Results:

   a. Under normal power, egress fixtures are controlled by the lighting control systems per their normal sequence of operation and turn off and dim accordingly per the lighting low voltage relay panel schedules, occupancy sensors, and daylighting controls. Exit signs always remain on.

   b. After a power loss, all egress fixtures and exit signs re-illuminate fully within 10 seconds of the start of the power loss event and remain on for a minimum of 90 minutes.

   c. All egress fixtures and exit signs return to normal operation when normal power service is restored to the facility and central battery inverter starts recharging.

L. 2608-E-12: Transfer Switches

1. System/Equipment to be tested.

   a. Transfer Switch

   [Designer: clarify the use of transfer switch should this be Manual or Automatic based on the design.]

2. Functions to be tested:

   a. Load transfer to alternate standby power (mobile generator).

   b. Load transfer to normal utility power.

   c. Verification of adjustments for final settings.

   d. Tightness of electrical connections.

3. Conditions of the test:

   a. Facility is served by normal utility power source.

b. Simulate loss of facility normal utility power source by switching off main normal power to the building at the service entrance. Simulate outage with emergency and communication systems running on battery backup.

c. Do not manually operate the transfer switch until both power sources are disconnected: open both normal and standby source circuit breakers.

d. Use the maintenance handle to manually operate transfer switch. Comply with manufacturer's "Manual Operations Test" procedures and instruction requirements.

e. Review manufacturer's control features operation prior to activation on switch control sequence

4. Acceptable Results:

a. The transfer switch does not retransfer the electrical load automatically.

b. The mobile generator is not stopped automatically.

c. Documentation of testing procedures, adjustments/settings, and results in compliance with NFPA 110 acceptance testing and manufacturer's testing instructions.

d. Documentation of verification and confirmation of transfer switch and mobile generator compatibility.

e. Loads run normally when generator power is connected and after transfer back to normal power.

f. No damage to equipment

R. 2608-E-13: Generator Receptacle

a. System / Equipment to be tested:

1) Enclosed Generator Receptacle

b. Functions to be tested:

1) Open ground

2) Phasing

3) Open hot

4) Open neutral

5) Hot and ground reversed.

c. 3. Conditions of the test:

1) Perform all tests and document the results for the functional test

d. Acceptable Results:

1) Tester indicates correct wiring.

M. 2608-E-14: Safety Switched and Enclosed Circuit Breakers

1. System/Equipment to be tested.

    a. Fused Disconnect

    b. Enclosed Circuit Breaker

2. Functions to be tested:

    a. Contact resistance.

    b. Insulation resistance.

    c. Verification of adjustments for final settings.

    d. Tightness of electrical connections.

    e. Long-time pickup and Long-time delay time-current characteristics.

    f. Short-time pickup and delay.

    g. Ground fault pickup and delay.

    h. Operation of any auxiliary features such as trip and pickup indicators, electrical close and trip operation, and trip-free.

    i. Trip unit reset operation based on coordination studies.

3. Conditions of the test:

    a. Perform a contact resistance test or millivolt drop across contacts at rated current.

    b. Perform an insulation resistance test from pole-to-pole and from each pole-to-ground with breaker closed and across open contacts of each phase per Exhibit A, Table 26 08 00 – A3.

    c. Perform primary current injection tests to ensure performance characteristics of trip units.

    d. Using the settings from the final Coordination Study, perform long-time pickup and long-time delay time-current characteristic tests by passing 300 percent rated current through each pole separately.

    e. Using the settings from the final Coordination Study, determine short-time pickup and short-time delay by primary current injection.

    f. Using the settings from the final Coordination Study, determine instantaneous pickup by primary current injection using run-up or pulse method.

    g. Using the settings from the final Coordination Study, determine ground fault pickup and time delay by primary current injection.

    h. Verify the correct operation of any auxiliary features such as trip and pickup indicators, zone interlocking, electrical close and trip operation, trip-free, and anti-pump function.

    i. Check trip unit reset operation.

j. Check key and other interlock safety devices for operation and sequence. Make closing attempts on locked-open and opening attempts on locked-closed devices including barriers and shutters.

k. Test the correct operation of the electrical lockout feature on the tie breaker.

l. Test fuse clips and ON/OFF handle.

4. Acceptable Results:

a. Compare microohm or millivolt drop values to adjacent poles and similar breakers. Investigate, correct and re-test deviations of greater than 50 percent.

b. Insulation resistance values shall be per Exhibit A, Table 26 08 00 - A3

c. Instantaneous pickup value shall be per NEMA Publication AB4-1991, Table 5-4.

d. Trip characteristics of breakers shall fall within manufacturer's published time current tolerance band including all adjustment factors.

e. Trip unit setpoints match those listed in the final Short Circuit/Coordination/Arc Flash study report.

3.08 LEVEL 1 SYSTEM TESTS

A. As described under the Systems Contract.

B. 2608-S-01 Standby Generator Functional Test:

[Designer: determine that the functional test is applicable to the project.]

1. Systems/Equipment to be tested:

a. Generator.

b. Automatic Transfer Switches.

c. Interface to BMS.

d. Interface to Fire Alarm.

[Designer: determine that the interface to fire alarm is applicable.]

e. Interface to elevator(s) and Elevator Machine Room(s)

[Designer: determine that the interface to elevator(s) and Elevator Machine Room(s) are applicable.]

f. Facility Equipment Under Emergency Power and Transition Conditions.

2. Functions to be tested:

a. Generator on-board controls and interfaces to electrical system via transfer switch.

b. Automatic transfer switch operation and interfaces to electrical system switchboards and panelboards.

c. Interfaces of generator and ATS to BMS.

d. Interfaces of generator and ATS to fire alarm.

[Designer: determine that the interfaces of generator and ATS to fire alarm is applicable.]

e. Interfaces of generator to elevator(s) and Elevator Machine Rooms(s).

[Designer: determine that the interfaces of generator to elevator(s) and Elevator Machine Room(s) are applicable.]

3. Conditions of the test:

a. Generator:

1) Test all components, equipment, and integral on-board controls of the generator, including all component, equipment, and system operating observations and modes of operation, per the manufacturer's recommended methods and as applicable for field observations and testing.

b. Automatic Transfer Switch:

1) Test all components, equipment, and integral on-board controls of the automatic transfer switch, including all component, equipment, and system operating observations and modes of operation, per the manufacturer's recommended methods and as applicable for field observations and testing.

2) Test interfaces to generator for signaling of standard interface and coordination points including call for generator start, normal and alternate power source availability, automatic and manual posturing controls and operations, generator cooldown, phase synchronization transfer controls, etc.

3) Test that phase rotation from generator to ATS matches the normal utility service source phase rotation.

c. Interface to BMS:

1) Test all monitored points between the generator and ATS.

d. Interfaces to Fire Alarm System:

[Designer: determine that the interface to Fire Alarm System is applicable.]

1) Test all monitored points between the generator and ATS.

e. Interface to Elevator(s) and Elevator Machine Room(s):

[Designer: determine that the interface to elevator(s) and Elevator Machine Room(s) are applicable.]

1) Test for Concurrent Maximum Load Measurement.

a) Load elevator up with as many people as possible and travel from lowest floor stop to highest floor stop.

b) Alternatively, the L&I elevator testing may have recorded the maximum amp loading for the elevator equipment when the elevator max load testing was conducted. Use that data, if available.

2) Test all elevator equipment, controls and 120V distribution panel inside the Elevator Machine Room(s).

f. Building Blackout and Recovery Test:

1) Coordinate with all affected subcontractors and lead a building blackout and recovery test for the facility.

a) This test shall be conducted when the affected equipment and systems have been substantially commissioned so that their operation under normal power, loss of normal power, transition and running under emergency power, and transition and running back to normal power can be verified.

b) Conduct this test with all subcontractors observing their respective equipment and systems during this test.

2) Open the normal electrical utility service breaker to simulate a normal power loss condition for the facility.

3) Verify the emergency electrical service timing for emergency lighting to ensure that it is restored within 10 seconds of normal service loss.

4) Wait for the others to observe the reaction of their equipment and systems under loss of power conditions and as the systems transition and run under the generator (observations include the emergency central battery inverters (or UPS)). Then, after all observations are complete, close the breaker for normal electrical power service.

5) Wait for the others to observe the reaction of their equipment and systems under transfer back from emergency to normal source. If the observed equipment and systems do not operate per design and per the manufacturer's documentation, conduct the test again until all observed equipment and systems operate correctly.

4. Acceptance Criteria:

a. Generator:

1) Verify all components, equipment, and integral on-board controls of the generator, including all component, equipment, and system operating observations and modes of operation, operate per the design requirements and the manufacturer's operation manuals.

b. Automatic Transfer Switch:

1) Verify all components, equipment, and integral on-board controls of the generator, including all component, equipment, and system operating observations, and modes of operation, operate

per the design requirements and the manufacturer's operation manuals.

2) Verify that all control and monitoring points between the generator and automatic transfer switch work correctly to provide a fully operational system.

3) Verify that the phase rotation from generator matches the normal utility service source phase rotation where they both input to the ATS.

c. Interfaces to BMS:

1) Verify all monitored points between the generator and ATS and the BMS.

d. Interfaces to Fire Alarm System:

[Designer: determine that the interface to Fire Alarm System is applicable.]

1) Verify all monitored points between the generator and ATS and the fire alarm system.

e. Interfaces to elevator(s) and Elevator Machine Room(s):

[*Designer: determine that the interface to elevator(s) and Elevator Machine Room(s) are applicable.]*

1) Verify elevator(s) works under generator power and operates with Maximum Load from lowest floor stop to highest floor stop.

2) Verify all elevator equipment, controls and 120V panel works under generator power inside the Elevator Machine Room(s).

f. Building Blackout and Recovery Test:

1) The generator and automatic transfer switch operate correctly to provide normal utility electrical service to the facility when it is available and to automatically switch service to facility emergency power distribution loads when normal utility electrical service is lost.

2) The emergency life safety circuits and equipment return to operation, under emergency power, within 10 seconds of power loss (note that these functions are energized at least initially via the central battery inverter (or UPS).

3) The equipment that is not served by emergency power circuits immediately stops and does not come back on under generator operation.

4) The equipment that is served by emergency power circuits may initially stop but come back on after generator power is supplied to those circuits and that they automatically restart with no nuisance alarms or the requirement for operator interventions to restart them.

5) When the utility service is restored, the transfer switch automatically transfers once again provide normal utility power

service to the building and the generator cools down and stops automatically.

6) When the transition back to normal occurs, the equipment served by emergency power circuits remain operational, without nuisance alarms or failures due to the transition.

7) When normal power service is restored, the equipment and systems not served by emergency circuits automatically restart with no nuisance alarms or the requirement for operator interventions to restart them.

C. 2608-S-02 Portable Generator Functional Test – Stations

[Designer: determine that the functional test is applicable to the project.]

1. System / Equipment to be tested:

   a. Operation of system on portable generator.

   b. Interface to elevator(s) and Elevator Machine Room(s)

   [Designer: determine that the interface to elevator(s) and Elevator Machine Room(s) are applicable.]

2. Functions to be tested:

   a. Connection of portable generator to generator receptacle.

   b. Startup of generator and transfer of Station loads via Manual Transfer Switch.

   c. Operation of Station loads while running on generator power. Run Station loads for a minimum of 30 minutes.

   d. Transfer of Station loads back to normal power via the Manual Transfer Switch.

   e. Interfaces of generator to elevator(s) and Elevator Machine Rooms(s).

   [Designer: determine that the interfaces of generator to elevator(s) and Elevator Machine Room(s) are applicable.]

3. Conditions of the Test:

   a. Station under a simulated outage with emergency and communication systems running on battery backup.

   b. Contractor to provide a 200 kVA, 480 V, 3 phase, 4 wire portable generator with the matching connection to the 200A generator receptacle installed on site for the purposes of completing portable generator and manual transfer switch commissioning activities. Sound Transit owned portable generators may be used instead of contractor provided generator only if available. Coordinate use of Sound Transit owned portable generator with Resident Engineer.

   c. Measure generator receptacle phasing in the field and configure generator to match so that no phase shifting occurs when loads are transferred to the generator. Provide documentation of the phasing to the Resident Engineer.

d. Measure generator receptacle phasing in the field and verify the phases match the installation documentation, revise phases if required to match documented phases so the same generator can back up the station without requiring any modifications. Configure generator to match so that no phase shifting occurs when loads are transferred to the generator. Provide documentation of the phasing from the Station and provide to the Resident Engineer.

e. Interface to Elevator(s) and Elevator Machine Room(s):

[Designer: determine that the interface to elevator(s) and Elevator Machine Room(s) are applicable.]

1) Test for Concurrent Maximum Load Measurement.

a) Load elevator up with as many people as possible and travel from lowest floor stop to highest floor stop.

b) Alternatively, the L&I elevator testing may have recorded the maximum amp loading for the elevator equipment when the elevator max load testing was conducted. Use that data, if available.

2) Test all elevator equipment, controls and 120V distribution panel inside the Elevator Machine Room(s).

4. Acceptable Results:

a. Loads run normally when generator power is connected and after transfer back to normal power.

b. No damage to equipment

c. Verify that the Stations' generator receptacle phasing matches the Garage generator receptacle phasing and adjust wiring for the Garage so that the single generator provided for testing can plug into either receptacle or transfer the loads without causing a phase shift in either location.

d. Interfaces to elevator(s) and Elevator Machine Room(s):

[*Designer: determine that the interface to elevator(s) and Elevator Machine Room(s) are applicable.]*

1) Verify elevator(s) works under generator power and operates with Maximum Load from lowest floor stop to highest floor stop.

2) Verify all elevator equipment, controls and 120V panel works under generator power inside the Elevator Machine Room(s).

D. 2608-S-03 Portable Generator Functional Test – Garages:

[Designer: determine that the functional test is applicable to the project.]

1. System / Equipment to be tested:

a. Operation of system on portable generator.

b. Interface to elevator(s) and Elevator Machine Room(s)

[Designer: determine that the interface to elevator(s) and Elevator Machine Room(s) are applicable.]

2. Functions to be tested:

   a. Connection of portable generator to generator receptacle.

   b. Startup of generator and transfer of Garage loads via Manual Transfer Switch.

   c. Operation of Garage loads while running on generator power. Run Garage loads for a minimum of 30 minutes.

   d. Transfer of Garage loads back to normal power via the Manual Transfer Switch.

   e. Interfaces of generator to elevator(s) and Elevator Machine Rooms(s).

   [Designer: determine that the interfaces of generator to elevator(s) and Elevator Machine Room(s) are applicable.]

3. Conditions of the Test:

   a. Garage under a simulated outage with emergency and communication systems running on battery backup.

   b. Contractor to provide a 3 phase, 4 wire portable generator with the matching connection to the generator receptacle installed on site.

   c. Measure generator receptacle phasing in the field and configure generator to match so that no phase shifting occurs when loads are transferred to the generator. Provide documentation of the phasing to the Resident Engineer.

   d. Measure generator receptacle phasing in the field and verify the phases match the installation documentation from the contract, revise phases if required to match documented phases so the same generator can backup other Sound Transit locations without requiring any modifications. Configure generator to match so that no phase shifting occurs when loads are transferred to the generator. Provide documentation of the phasing to the Resident Engineer.

   e. Interface to Elevator(s) and Elevator Machine Room(s):

      [Designer: determine that the interface to elevator(s) and Elevator Machine Room(s) are applicable.]

      1) Test for Concurrent Maximum Load Measurement.

         a) Load elevator up with as many people as possible and travel from lowest floor stop to highest floor stop.

         b) Alternatively, the L&I elevator testing may have recorded the maximum amp loading for the elevator equipment when the elevator max load testing was conducted. Use that data, if available.

      2) Test all elevator equipment, controls and 120V distribution panel inside the Elevator Machine Room(s).

4. Acceptable Results:

a. Loads run normally when generator power is connected and after transfer back to normal power.

b. No damage to equipment.

c. Interfaces to elevator(s) and Elevator Machine Room(s):

[*Designer: determine that the interface to elevator(s) and Elevator Machine Room(s) are applicable.]*

1) Verify elevator(s) works under generator power and operates with Maximum Load from lowest floor stop to highest floor stop.

2) Verify all elevator equipment, controls and 120V panel works under generator power inside the Elevator Machine Room(s).

E. 2608-S-04: Central Battery Inverter and Uninterruptible Power Supply:

1. System/Equipment to be tested:

a. Central Battery Inverter.

b. Uninterruptible Power Supply.

2. Functions to be tested:

a. Normal and bypass operation including bypass function.

b. Local alarms.

c. Remote communications.

d. Battery supply.

e. Output voltage (by vendor).

f. Battery monitoring (by vendor).

g. Connection torque (by vendor).

3. Conditions of test:

a. Test the normal and bypass operation of the inverter/UPS using resistive load banks to simulate all types of load conditions.

b. Test protective and alarm functions.

c. Test monitoring capabilities locally and remotely.

d. Perform a 15-minute battery rundown test.

e. Provide documentation that overload capacity testing was performed by manufacturer.

f. Install power recording meters to record all unit parameters under actual load conditions. Meters to be installed at inverter/UPS and at panelboard served.

4. Acceptable Results:

a. Normal and bypass operation of inverter/UPS meets design criteria as stated in the Contract Documents. Provide record of input and output voltage and current at 25 percent, 50 percent, 75 percent and 100 percent load.

b. Remote monitoring location receives correct information regarding Unit Status, Unit Parameters and Unit Alarms.

c. Batteries are able to provide 15 minutes supply to loads with 75 minutes of capacity remaining under simulated full load when the inverter/UPS is disconnected from its power source.

d. Overload capacity meets design criteria as shown in manufacturer's test report. 125 percent for 10 minutes, 150 percent for 30 seconds.

F. 2608-S-05: Lighting Control Panels:

1. Systems/Equipment to be tested for both normal and emergency circuits in interior and exterior application:

a. Lighting Control Panels.

1) Override Manual Switch (see settings in lighting control sequence of operation).

2. Functions to be tested:

a. Lighting Control Panels:

1) Automatic control of lighting loads.

2) Manual override of automatic function.

3) Relay status.

4) Power failure and subsequent Power Up.

5) Daylight control settings.

6) Time control settings.

7) Network Interface.

3. Conditions of the test:

a. Lighting Control Panel:

1) Demonstrate automatic control via controller CPU.

2) Manually override all automatic functions to control lights regardless of time-of-day schedule or daylight control requirement.

3) Verify relay status.

4) Fail the incoming power to the controller for a period of 30 minutes. Failure of power to take place 10 minutes prior to a programmed change in the lighting control schedule. Restore power to the controller to verify time scheduled events that were

to take place during the power outage will be automatically activated.

5) Demonstrate daylight control by inhibiting the amount of light to the sensor.

6) Demonstrate time control and the ability to modify schedules.

7) Demonstrate override control of the light control system via the network lighting controller.

4. Acceptable Results:

a. Lighting Control Panel:

1) Automatic control satisfactorily operates per programmed schedules.

2) Manual override bypasses normal controller operation and turns on all lights.

3) Relay status feedback monitors actual status of each relay.

4) The controller activates in the correct operating status following failure of power.

5) Daylight sensor shall respond to diminished lighting. Measure light levels before and after inhibiting sensor.

6) Lighting controller operates satisfactorily following modification of time schedules.

7) Network lighting controller provides complete override control over the lighting system.

G. 2608-S-06: Photovoltaic Collectors:

[Designer: determine that the functional test is applicable to the project.]

1. System/Equipment to be tested:

a. Micro-Inverters.

b. Photovoltaic Modules.

c. AC & DC Overcurrent Protection Devices.

d. Photovoltaic Collectors Power Distribution.

2. Functions to be tested:

a. Insulation resistance.

b. Tightness of electrical connections.

c. Circuit breaker functions, as applicable.

3. Conditions of the test:

a. Perform a contact resistance test or millivolt drop across contacts at rated current.

b. Peak and lowest solar exposure.

c. Conditions for circuit breakers, as applicable

4. Acceptable Results:

a. Photovoltaic metering equipment provides metering of instantaneous and continuous KW and kWh output.

b. When applicable, check the cellular connectivity to remote monitoring system.

3.09 LEVEL 2 SYSTEM TESTING REQUIREMENTS

A. Systems checklists are required to include the following, at a minimum:

B. 2608-IS-01: Lighting System BMS Interface:

1. Systems to be tested:

a. Networked Lighting Systems.

2. Systems functions to be tested:

a. Hours of Operation.

b. Override On.

c. Trouble.

3. Conditions of the test: Refer to the control diagrams and Division 25 specifications for points lists.

a. Acceptance Criteria: All functions and communications indicated in the sequence of operation and points lists transmit correctly. For equipment provided with emergency electrical power service, the BMS interfaces and fan equipment automatically restart after power is transferred to an emergency power source without nuisance alarms or the need for operator intervention. When normal power is restored and power is transferred back to the normal power source, the BMS interfaces and fan equipment continue to operate without nuisance alarms or the need for operator intervention.

C. 2608-IS-02: Uninterruptible Power Supplies BMS Interface:

1. Systems to be tested:

a. Uninterruptible Power Supply Systems.

2. Systems functions to be tested:

a. Battery failure.

b. Power failure.

c. UPS on battery.

3. Conditions of the test: Refer to the control diagrams and Division 25 specifications for points lists.

4. Acceptance Criteria: All functions and communications indicated in the sequence of operation and points lists transmit correctly. For equipment provided with emergency electrical power service, the BMS interfaces and fan equipment automatically restart after power is transferred to an emergency power source without nuisance alarms or the need for operator intervention. When normal power is restored and power is transferred back to the normal power source, the BMS interfaces and fan equipment continue to operate without nuisance alarms or the need for operator intervention.

3.10 LEVEL 1 AND LEVEL 2 TEST REQUIREMENTS MATRIX

	2608-IV-0X	2608-ST-0X	2608-C-0X	2608-E-0X	2608-S-0X	2608-IS-OX
Power wires, conductors, and cables	X					
Grounding and bonding for electrical systems	X					
Transformers	X					
Medium voltage metal clad switchgear	X					
Switchboards	X					
Panelboards	X					
Circuit breakers	X					
Motor control centers	X					
Motor Control Equipment (FVNR, Soft-Start and VFD)	X					
Protective Device Relays	X					
Instrument Transformers	X					
Metering and Instrumentation	X					
Central Battery Inverter	X					
Batteries	X					
Static uninterruptible power supply	X					
Lighting Systems	X					
Photovoltaic Collectors	X					
Electric Vehicle charging systems	X					
Transfer Switches	X					
Enclosed Switches, Fuses and Disconnects	X					
Generators	X					
Insulation Resistance		X				
Bolted Connection Torque		X				
Ground Resistance		X				
Lighting Systems Illuminance Levels		X				
Circuit Continuity and Phase Relationship		X				
Instrument Transformers			X			
Metering and Instrumentation			X			
Molded Case Circuit Breakers				X		

	2608-IV-0X	2608-ST-0X	2608-C-0X	2608-E-0X	2608-S-0X	2608-IS-OX
Medium Voltage Power Circuit Breakers				X		
Low Voltage Power Circuit Breakers				X		
Ground Fault Protection System				X		
Dry Type Medium Transformers				X		
Switchboards				X		
Motor Control Equipment				X		
Receptacle				X		
Interior Lighting Control Devices				X		
Exterior Lighting Control Devices				X		
Egress Fixtures and Exit Signs				X		
Transfer Switches				X		
Generator Receptacle				X		
Safety Switched and Enclosed Circuit Breakers				X		
Generator Functional Test					X	
Portable Generator Functional Test – Stations					X	
Portable Generator Functional Test - Garage					X	
Central Battery Inverter and Uninterruptible Power Supply					X	
Lighting Control Panels					X	
Photovoltaic Collectors					X	
Lighting System BMS Interface						X
Uninterruptible Power Supplies BMS Interface						X

[DESIGNER: ADD OR MODIFY MATRIX AS NECESSARY BASED ON TESTS ADDED OR MODIFIED ABOVE DEPENDING UPON THE LOCATION DESIGN FOR FALL-ARREST SYSTEMS. COORDINATE WITH 11 24 29]

3.11 LEVEL 3 INTER-STATION SYSTEM INTERFACE TEST REQUIREMENTS

A. Support Level 3 tests in accordance with general commissioning requirements as stated in the Contract Documents.

END OF SECTION

EXHIBITS (On Proceeding Pages)

1. **Exhibit A:** Test Parameter Tables
2. **Exhibit B:** Example Installation Verification Form
3. **Exhibit C:** Example Equipment Test

Exhibit A - TABLE SECTION 26 08 00 – A1

TRANSFORMER INSULATION-RESISTANCE

ACCEPTANCE TEST VOLTAGE AND MINIMUM RESULTS

Transformer Coil Rating Type in Volts	Minimum dc Test Voltage	Recommended Minimum Insulation Resistance in Megohms	
		Liquid Filled	Dry
0 - 600	1000	100	500
601 - 5000	2500	1000	5000
5001 – 15000	5000	5000	25000

TABLE 26 08 00 – A2

US STANDARD BOLT TORQUES FOR BUS CONNECTIONS

HEAT-TREATED STEEL - CADMIUM OR ZINC PLATED

Grade	SAE 1 & 2	SAE 5	SAE 7	SAE 8
Minimum Tensile (P.S.I.)	64K	105K	133K	150K
Bolt Diameter In Inches	Torque (Foot Pounds)			
1/4	4.0	5.6	8.0	8.4
5/16	7.2	11.2	15.2	17.6
3/8	12.0	20.0	27.2	29.6
7/16	19.2	32.0	44.0	48.0
1/2	29.6	48.0	68.0	73.6
9/16	42.4	70.4	96.0	105.6
5/8	59.2	96.0	133.6	144.0
3/4	96.0	160.0	224.0	236.8
7/8	152.0	241.6	352.0	378.4
1.0	225.6	372.8	528.0	571.2

BOLT TORQUES FOR BUS CONNECTIONS

SILICON BRONZE FASTENERS [1]

TORQUE (FOOT-POUNDS)

Bolt Diameter in Inches	Nonlubricated	Lubricated
5/16	15	10
3/8	20	14
1/2	40	25
5/8	55	40
3/4	70	60

[1] Bronze alloy bolts shall have a minimum tensile strength of 70,000 pounds per square inch.

ALUMINUM ALLOY FASTENERS [2]

TORQUE (FOOT POUNDS)

Bolt Diameter in Inches	Lubricated
5/16	8.0
3/8	11.2
1/2	20.0
5/8	32.0
3/4	48.0

[2]Aluminum alloy bolts shall have a minimum tensile strength of 55,000 pounds per square inch.

BOLT TORQUES FOR BUS CONNECTIONS

STAINLESS STEEL FASTENERS [3]

TORQUE (FOOT POUNDS)

Bolt Diameter in Inches	Uncoated
5/16	14
3/8	25
1/2	45
5/8	60
3/4	90

[3] Bolts, cap screws, nuts, flat washers, locknuts: 18-8 alloy.

Belleville washers: 302 alloy.

TABLE 26 08 00 – A3

INSULATION RESISTANCE TESTS ON ELECTRICAL APPARATUS AND SYSTEMS

Maximum Rating of Equipment in Volts	Minimum Test Voltage, dc in Volts	Recommended Minimum Insulation Resistance in Megohms
250	500	25
600	1,000	100
5,000	2,500	1,000
8,000	2,500	2,000
15,000	2,500	5,000
25,000	5,000	20,000
35,000	15,000	100,000
46,000	15,000	100,000
69,000	15,000	100,000

In the absence of consensus standards dealing with insulation-resistance tests, the NETA Technical Committee suggests the above representative values.

NOTE: See Table 26 08 00 - A4 for temperature correction factors.

TABLE 26 08 00 - A4

INSULATION RESISTANCE CONVERSION FACTORS

FOR CONVERSION OF TEST TEMPERATURE TO 20°C

Temperature		Multiplier	
°C	**°F**	**Apparatus Containing Immersed Oil Insulations**	**Apparatus Containing Solid Insulations**
0	32	0.25	0.40
5	41	0.36	0.45
10	50	0.50	0.50
15	59	0.75	0.75
20	68	1.00	1.00
25	77	1.40	1.30
30	86	1.98	1.60
35	95	2.80	2.05
40	104	3.95	2.50
45	113	5.60	3.25
50	122	7.85	4.00
55	131	11.20	5.20
60	140	15.85	6.40
65	149	22.40	8.70
70	158	31.75	10.00
75	167	44.70	13.00
80	176	63.50	16.00

EXHIBIT B: EXAMPLE INSTALLATION VERIFICATION TEST

Project Name: xxxxxxx xxxxxxx xxxx
Test Rev x.x – xx/xx/20xx

Interior Lighting Control Devices
Specification Section 26 xx xx

☐ First Test ☐ PASS Test Date: _____
☐ Repeat Test ☐ FAIL
☐ Demonstrated Test

OBJECTIVES:

A. Verify that the interior lighting controls manual light switch, occupancy sensors, vacancy sensors, daylighting sensors and motion sensor are installed per code and the design document requirements.

EQUIPMENT TO BE TESTED:

Equipment ID	Description
N/A	Manual Light Switch (single switch or 3-way switch)
N/A	Occupancy Sensors (wall or ceiling mounted)
N/A	Vacancy Sensors (wall or ceiling mounted)
N/A	Daylighting sensors (integral or external to the light fixtures)
N/A	Motion Sensors (integral or external to the light fixtures)

REFERENCE DOCUMENTS:

Document
Drawings:
Specification Sections:
Submittals:

TEST PRE-REQUISITES:

Activity	Notes	Completed?	
		Yes	No
None		☐	☐
Notes: (1)			

MINIMUM PARTICIPANTS:

Participant	Notes	Required?	
		Yes	No
Installing contractor		☒	☐
Sound Transit site quality inspector		☐	☐
Commissioning Authority		☒	☐
Notes: (1)			

REQUIRED INSTRUMENTATION AND EQUIPMENT:

Instrument or Equipment						Notes	Provided Instrumentation meets Requirements?	
Type or Sensed Parameter	Manufacturer	Model	Range	Accuracy	Calibration Date/ Next Cal. Due		Yes	No
See NETA Report				±	/		☐	☐
							☐	☐

Notes:
(1)

CONDITIONS AT TIME OF TESTING:

AREA OF WORK:

Area in Which Work will be Conducted:
Notes: (1)

ISSUES DISCOVERED AND PROPOSED RESOLUTIONS:

No.	Issue	Proposed Resolution

Notes:
(1)

INSTALLATION VERIFICAION CHECKLIST - GENERAL

Equipment ID	Conditions of materials at time of delivery is acceptable:	The make and model of the materials and/or equipment matches the product submittals:	The installed materials and/or equipment does not have visible damage, including finishes:	The equipment and/or distribution materials matches the locations shown on the design dwgs:	The equipment and/or distribution materials matches the locations shown on the as-built dwgs:	The manufacturer's recommended and required maintenance clearances are maintained:	Notes	Pass?		Date
								Yes	No	
Occupancy Sensors (wall mount)								☐	☐	
Occupancy Sensors (ceiling mount)								☐	☐	
Daylight Sensors (Stand Alone)								☐	☐	
Motion sensor (Integral to Fixture)								☐	☐	
								☐	☐	

Notes:
(1)

[Designer: provide the type of interior lighting controls specified in the lighting control sequence of operation.]

INSTALLATION VERIFICATION CHECKLIST

Sequence	Checklist Item	Notes	Pass? Yes	Pass? No	Date
Manufacturer's Installation Instructions					
1.0	Verify that the attached manufacturer's installation instructions have been followed for the switchboard and accessories.		☐	☐	
Notes: (1)					
Specification Installation Requirement Checklists					
2.1	All devices shall be suitable for the field conditions at the installed locations. All devices shall be approved by the manufacturer for installation in the indicated environment.		☐	☐	
2.2	Protect lighting controls from dust and damage during construction.		☐	☐	
2.3	Coordinate the placement of sensors and wall controls with millwork, furniture, equipment, etc., installed under other sections or by others.		☐	☐	
2.4	Coordinate the placement of wall controls with actual installed door swings.		☐	☐	
2.5	Coordinate the placement of daylight sensors with windows, skylights, and luminaires to achieve optimum operation.		☐	☐	
2.6	Coordinate placement with ductwork, piping, equipment, or other potential obstructions to light level measurement installed under other sections or by others.		☐	☐	
2.7	Coordinate the work to provide luminaires and lamps compatible with the lighting controls to be installed.		☐	☐	
2.8	All lighting control system components shall be installed and mounted per manufacturer's instructions and requirements.		☐	☐	
2.9	Label all wiring, raceway, circuits, panels, components, etc., as required in the identification of electrical systems requirements as stated in the contract documents.		☐	☐	
2.10	Sensors shall be suitable for mounting in any position on a standard outlet box (except where integral to fixture.		☐	☐	
2.11	Relay power packs shall be externally mounted through a ½" knockout in a standard electrical enclosure.		☐	☐	
			☐	☐	
Notes:					

INSTALLATION VERIFICATION CHECKLIST

Sequence	Checklist Item	Notes	Pass?		Date
			Yes	No	
(1)					

SIGNATURES:

Company	Printed Name	Signature	Date
Installing Contractor:			
ST Witness:			
Other Witness:			

EXHIBIT C: EXAMPLE EQUIPMENT TEST

Project Name: xxxxxxx xxxxxxx xxxx **NETA Testing – Switchboards and Panelboards**

Test Rev x.x – xx/xx/20xx Specification Section 26 xx xx

☐ First Test ☐ PASS Test Date: _____

☐ Repeat Test ☐ FAIL

☐ Demonstrated Test

OBJECTIVES:

A. Verify that the electrical panelboards are inspected and operate to meet the design document requirements, as tested per NETA and commissioning specifications.

EQUIPMENT TO BE TESTED:

Equipment ID	Description
PB4-xx-xx	Electrical switchboard
PB2-xx	Electrical panelboard
PB2-xx	Electrical panelboard
PB2-xx	Electrical panelboard

REFERENCE DOCUMENTS:

Document
Drawings:
Specification Sections:
Submittals:

TEST PRE-REQUISITES:

Activity	Notes	Completed?	
		Yes	No
None		☐	☐
Notes: (1)			

MINIMUM PARTICIPANTS:

Participant	Notes	Required?	
		Yes	No
Installing contractor		☒	☐
Sound Transit site quality inspector		☐	☐
Commissioning Authority		☒	☐
Notes: (1)			

REQUIRED INSTRUMENTATION AND EQUIPMENT:

Instrument or Equipment						Notes	Provided Instrumentation	
Type or Sensed Parameter	Manufacturer	Model	Range	Accuracy	Calibration Date/ Next Cal. Due		Yes	No
See NETA Report				±	/		☐	☐
							☐	☐

Notes:
(1)

CONDITIONS AT TIME OF TESTING:

AREA OF WORK:

Area in Which Work will be Conducted:

Notes:
(1)

ISSUES DISCOVERED AND PROPOSED RESOLUTIONS:

No.	Issue	Proposed Resolution

Notes:
(1)

SIGNATURES:

Company	Printed Name	Signature	Date
Installing Contractor:			
ST Witness:			
Other Witness:			

FUNCTIONS TO BE TESTED:

A.	Insulation resistance
B.	Phase rotation
C.	Installation verifications per NETA

Notes:

(1)

CONDITIONS OF TEST:

A.	Perform insulation resistance test phase-to-phase and phase-to-ground of each bus section.
Notes: (1)	

ACCEPTABLE RESULTS:

A.	Insulation resistance test voltages and minimum resistances shall be in accordance with Exhibit A, Table 26 08 00 - A3.
B.	Phase rotation shall be compatible with the serving utility.
C.	NETA inspections are all confirmed to be acceptable.
Notes: (1)	

OPERATIONAL CHECKLSITS:

No.	Checklist Item	Notes	Pass?		Date
			Yes	No	
3rd Party NETA Testing Agency					
1.1	Attach the final report from the NETA Testing Agency for all the breakers requiring testing.		☐	☐	
1.2	Verify that all of the testing has passed the acceptance criteria. Make notes of any conditions or equipment that did not pass the acceptance criteria in the notes below.		☐	☐	
Notes: (1)					

END OF EXHIBITS

SECTION 26 13 13

MEDIUM-VOLTAGE AC CIRCUIT BREAKER SWITCHGEAR

PART 1 - GENERAL

1.01 SUMMARY

A. Section Includes.

1. Requirements for metal-clad, medium-voltage AC circuit breaker switchgear for medium-voltage distribution, excluding prefabricated traction power substation AC switchgear.

1.02 REFERENCES

A. Abbreviations and Acronyms

1. LCC Link Control Center.

2. MVSS Medium Voltage Substation.

3. NC Normally closed.

4. NO Normally open.

B. Institute of Electrical and Electronics Engineers (IEEE):

1. IEEE C37.06 Standard for AC High-Voltage Circuit Breakers Rated on a Symmetrical Current Basis - Preferred Ratings and Related Required Capabilities for Voltages Above 1000 V.

2. IEEE C37.09 Standard Test Procedure for AC High-Voltage Circuit Breakers Rated on a Symmetrical Current Basis.

3. IEEE C37.12 Guide for Specifications of High-Voltage Circuit Breakers (over 1000 Volts).

4. IEEE C37.20.2 Standard for Metal-Clad Switchgear.

5. IEEE C37.46 Standard Specifications for High-Voltage (>1000 V) Expulsion and Current-Limiting Power Class Fuses and Fuse Disconnecting Switches.

6. IEEE C37.90 Standard for Relays and Relay Systems Associated with Electric Power Apparatus.

7. IEEE C57.13 Standard Requirements for Instrument Transformers.

C. National Electrical Contractors Association (NECA):

1. NECA 1 Standard for Good Workmanship in Electrical Construction.

2. NECA 430 Standard for Installing Medium-Voltage Metal-Clad Switchgear.

1.03 SUBMITTALS

A. Manufacturer's descriptions, catalog data and other pertinent information concerning design and application ratings, service performance and reliability and information, necessary for the operation and maintenance of equipment.

B. Manufacturer's detail drawings for each type of switchgear assembly.

C. Manufacturer's schematic wiring and interconnection diagrams.

D. Relays, control switches, indicating lamps, protective devices and cubicle heaters. Complete description of protection devices, coordination curves, and setting procedures.

E. AC Switchgear: Complete details of circuit breakers and draw-out mechanism.

F. Ground and test device details including terminals, ports, insulation, barriers, grounding, and octopus.

G. Preliminary and as-built relay setpoint files.

H. Shop Drawings

I. Testing:

1. Test procedures for each test to be performed.

2. Test results for each test a maximum of 10 Days after date test was performed.

J. Maintenance Material Submittals:

a. Spare Parts: Provide one spare breaker of each voltage class.

b. Serial and model number information: Provide serial numbers and model numbers for all circuit breakers CTs and PTs, etc.

K. Tools:

1. Provide one manual circuit-breaker racking handle at each switchgear location.

2. Provide one manual crank at each switchgear location for charging circuit breaker operating mechanism.

3. Provide 27kV and 15 kV ground and test devices in quantities as noted on the drawings. Provide one ground "octopus" for each.

4. Provide one transfer table at each MVSS.

1.04 QUALITY ASSURANCE / QUALITY CONTROL

A. The AC metal clad switchgear shall be UL labeled or certified as conforming to the requirements of UL and IEEE by a third-party testing laboratory recognized by the State of Washington.

B. Switchgear supplier shall have and document a minimum of 10 years' experience providing comparable switchgear and protective relays to industrial, transit or utility customers.

C. Testing:

1. Factory Tests: Shall be conducted by or under the supervision of the equipment manufacturer.

2. Field Tests: Shall be conducted by a NETA certified technician working for an independent testing company under the supervision of the Contractor. The NETA technician shall have a minimum 5 years' experience testing AC switchgear and AC relays. The testing company shall be a NETA member. Qualifications shall be submitted for approval by the Resident Engineer.

1.05 DELIVERY, STORAGE, AND HANDLING

A. Deliver, store, protect, and handle equipment specified in this Section in accordance with manufacturer's recommendations and NECA 430.

B. Storage of the equipment shall be arranged to prevent condensation on or in all cubicles.

PART 2 - PRODUCTS

2.01 GENERAL

A. AC switchgear shall form a line-up of dead-front, totally enclosed, free-standing switchgear suitable for indoor service.

B. Switchgear shall be metal-clad and conform to the requirements of IEEE C37.20.2, except as otherwise indicated.

C. Switchgear shall be manufactured in accordance with the referenced IEEE standards.

2.02 RATINGS

A. AC switchgear shall have the following ratings:

1. Nominal Voltage: 26.4 or 12.5 kV.

2. Maximum Voltage: 27 kV rms or 15 kV rms.

3. Frequency: 60 Hz.

4. Insulation Level, 60 Hz Withstand: 60 kV.

5. Insulation Level, Impulse Withstand: 95kV or 125 kV.

6. Continuous Current: 600A or 1200 A.

7. Momentary Current Symmetrical: 25 kA rms.

8. Maximum Dimensions: 36 inches wide, 96 inches deep, 95 inches high or as noted on drawings.

2.03 AC SWITCHGEAR STRUCTURE

A. Construction:

1. Rigid, self-supporting and self-contained.

2. Structural elements electrically welded or bolted together.

3. No. 11 gauge minimum steel.

4. Shall support equipment under normal loads, short-circuit conditions, and specified seismic conditions.

5. AC switchgear enclosure shall be divided, barriered, and partitioned into separate vertical sections.

6. Paint switchgear enclosures in accordance with Section 34 21 27, Metal Fabrication and Finishes.

B. Mimic Bus:

1. Provide mimic bus across the entire front-face of the switchgear.

2. Mimic bus shall be factory-applied, plastic, 3/8-inch wide and a minimum of 1/32- inch thick. Adhesive tape mimic bus is not acceptable.

3. Indicate with symbols all circuit breakers, switches, potential transformers and incoming and outgoing feeders.

4. Color: Red.

C. Circuit Breaker Compartments.

1. Suitable for accommodation of draw-out circuit breakers.

2. Provide supporting rails for the circuit breakers that allow the circuit breakers to be easily drawn in or out of their housing:

a. Circuit breakers shall draw out from the lower compartment directly onto the floor. Circuit breakers in upper compartments are not allowed.

b. Provide guide rails or cradles for positioning the removable elements as an integral part of the equipment. Guides shall ensure proper alignment.

3. Provide self-aligning, self-coupling, primary and secondary disconnecting devices that allow the draw out breakers to connect or disconnect from the buses and auxiliary circuits:

a. Provide automatic protective shutters to cover live high-voltage terminals and prevent accidental contact with live parts as the removable element of breaker is drawn out of the cubicle.

b. Connection of control wiring to the AC breaker shall be by sliding contacts. A plug-style disconnect is acceptable, provided the breaker cannot be mechanically racked into the connected position with the plug disconnected.

4. Provide a manual racking mechanism for horizontal draw-out of each circuit breaker:

a. Mechanism shall have three circuit breaker positions: Disconnected, test, and connected.

b. Provide positive stops to prevent over-travel at each position.

c. Mechanism shall be designed for racking of circuit breaker in and out of connected and disconnected position with the compartment front door in the closed and latched position.

d. When the breaker is in the connected and test positions, the case and frame shall be grounded by means of a positive contact with a copper ground bus.

5. Provide remote-racking system including linkages, motor mechanism, and control station with umbilical cord. Racking shall be possible by a worker located at least

ten feet to either side of the affected circuit breaker compartment. Provide one remote-racking system for each MVSS.

6. Provide the following interlocks:

   a. Prevent either electrical or manual operation of the breaker unless it is in the Connected or Test position.

   b. A positive mechanical interlock shall prevent racking in or out unless the breaker is in the Open position.

   c. Circuit breaker, complete with the operating mechanism shall be capable of being removed from the enclosure only in the Disconnected position.

D. Control/Terminal Board Compartment.

1. Controls, including programmable controllers, instrumentation, control relays, terminal boards, control wiring and control devices shall be housed in a separate control/terminal board compartment.

2. Compartment shall be barriered from the power wiring and bus work compartments.

   a. Exception. Where controls and terminal boards are dedicated to circuit breaker function, they may be located in the circuit breaker compartment.

3. Protective relays, meters, instruments and control devices shall be mounted on front compartment doors.

E. Access Doors:

1. Access to all components shall be from the front and the rear. When doors are opened to 120-degree stop position, it shall be possible to open adjacent cubicle doors.

2. Equipment access panels located on the side or top of the enclosures are prohibited.

3. Provide each compartment with separate hinged front and rear access doors for servicing.

4. Opening of any front door shall not expose circuits in adjacent compartments.

5. Construction:

   a. No. 11 gauge minimum sheet metal.

   b. Properly reinforce against distortions using suitable flanges and stiffening members.

6. Hinges: Stainless steel heavy-duty type.

7. Latches:

   a. Doors shall be securely fastened in the closed position with a three-point latch easily opened without the use of tools.

8. Two latches will be allowed if front panel consists of more than one full- length door.

9. Handles: Provide each door with a heavy duty-handle.

10. Door Stops: Provide each door with a heavy-duty stop to hold it securely in the open position.

F. Heaters.

1. Provide heating strips in each cubicle. Operating voltage for heating strips shall not exceed 50 percent of heater rated voltage.

2. Provide an individual thermostat to control heater in each cubicle. Locate in a general area such that cool air in the lower portion of the cubicle can be sensed by the thermostat.

G. Lights: Provide linear LED lighting strips, mounted vertically in the left and right front corners of the control/terminal board compartment of each cubicle and directed at the control/terminal panel. Lighting strips to be 18 inches minimum in length and provide accurate rendering of wire colors.

H. Warning Signs:

1. Front Access Doors: Sign on each stating "DANGER: LIVE PARTS" and "DANGER: HIGH VOLTAGE."

2. Rear Access Doors.

a. Sign on each stating "DANGER: LIVE PARTS" and "DANGER: HIGH VOLTAGE."

b. Sign on each removable plastic panel inside access door stating, “DANGER: HIGH VOLTAGE.”

2.04 MEDIUM-VOLTAGE CIRCUIT BREAKER

A. General.

1. Circuit breaker shall be a draw-out type and utilize vacuum interrupters having load and fault break capabilities and shall conform to or exceed the requirements of IEEE C37.06 and IEEE C37.12.

2. Circuit breakers shall be identical and physically and electrically interchangeable.

3. Circuit breaker frame shall be provided with a full front metal shield to prevent access to any live primary bus or load terminals when the circuit breaker is in the connected position.

4. Provide a truck or fifth wheel at each switchgear location to facilitate one-person breaker removal and turning.

5. Provide means for padlocking the AC breaker in the open position.

6. Circuit Breaker Insulation.

a. Noncombustible, non-hygroscopic and track-resistant.

b. Mechanical strength and physical characteristics shall match the stresses imposed by the circuit breaker rated momentary current.

B. Minimum Ratings:

1. Nominal System Voltage: 26.4Y/15.2 kV or 12.5Y/7.2 kV three-phase, solidly grounded.

1. Maximum Voltage: 27 kV rms or 15 kV rms.

2. Frequency: 60 Hz.

3. Insulation Level, 60 Hz: 36 kV, rms.

4. Insulation Level, Impulse: 125 kV, crest.

5. Short Circuit Current at Maximum Voltage: 25 kA rms.

6. Continuous Current: 1200 A.

7. Closing and Latching Capability: 62 kA rms.

8. Fault Clearing Time: 5 cycles max.

C. Circuit Breaker Operating Mechanism.

1. Motor-charged and spring-operated unless otherwise approved by Resident Engineer.

2. Mechanism shall be designed to prevent overcharging.

3. The mechanism shall ensure that the release of stored energy for closing the circuit breaker main contacts is prevented unless the mechanism has been fully charged.

4. The stored-energy closing mechanism shall automatically charge itself within 15 seconds after closing of the breaker.

5. Energy storage shall be sufficient for an open-close-open cycle at maximum rated short circuit current.

6. A manual cranking feature shall be included on the operating mechanism to permit spring charging in the event motor power is unavailable. Provide an interlock to prevent withdrawal of the circuit breaker from the enclosure when the mechanism is in the fully charged state:

   a. Automatic controlled discharge of the stored energy when the circuit breaker is withdrawn from or inserted into the enclosure will also be acceptable.

7. Circuit breaker shall be electrically and mechanically trip free. The operating mechanism shall be non-pumping.

8. Provide a four-digit, non-resettable, register-type mechanical operations counter on each circuit breaker to record each close/open cycle.

D. Circuit Breaker Control:

1. Control Voltage: 125 Vdc.

2. Closing Mechanism: Provide with a spring release coil, anti-pump relay and spring charging motor suitable for operation over a voltage range from 85 percent to 115 percent of the nominal dc control voltage.

3. Tripping Mechanism: Provide with a shunt trip coil suitable for operation over a voltage range from 75 percent to 125 percent of the nominal dc control voltage.

4. Control Switches:

   a. Open/Close: Switchboard type heavy-duty pistol-grip control. Control switch shall permit open and close operations when the circuit breaker is in the connected or test position.

b. Provide a switch for resetting the circuit breaker after a trip and provide a mechanical trip indication at the control switch.

c. Local/Remote (Device 43): Switch mounted on the front of the cubicle. Provide positive stops in both positions.

5. Auxiliary Contacts: Provide a minimum of six electrically separate sets of reversible auxiliary contacts, in addition to those required for the circuit breaker control circuit.

a. Auxiliary contacts shall be operated by the breaker mechanism in both the Connected and Test positions.

b. Spare auxiliary contacts shall be wired to the outgoing terminal blocks.

E. Trip Circuit Monitor:

1. Provide a trip circuit monitor for monitoring the trip coil on each AC circuit breaker and lockout relay.

2. Monitor shall have NO and NC Form C contacts for indication of a failed trip coil.

3. Monitor shall have a 200-millisecond delay to allow for auxiliary contacts to transfer.

4. Control Power: 125 Vdc.

5. Trip coil status shall be monitored by SCADA.

6. Manufacturer: E-max RAW-1D or approved equal as approved by Resident Engineer.

F. Indicating Lights.

1. Provide indicating lights on the front of the circuit breaker enclosure to indicate the state of the circuit breaker:

a. Closed Breaker: Red light.

b. Tripped or Open Breaker: Green light.

2. Provide an amber LED above each local/remote switch that illuminates to indicate switch is in local position.

3. Provide a white LED indicating light on the front of the circuit breaker enclosure to indicate the stored-energy closing mechanism is charged.

4. Trip Circuit Monitor:

a. Provide a green LED that illuminates when the trip coil is energized and turns off when the coil is de-energized.

b. Provide a red LED that illuminates upon failure of the trip coil.

5. LEDs:

a. Plug-in replaceable with a life of 100,000 hours.

b. Protected against reverse polarity by a diode.

G. Lock Out Relay (Device 86): When the main AC circuit breaker is tripped by the lockout relay, the AC breaker shall be locked out until manually reset.

2.05 BUSES AND CONNECTIONS

A. Main horizontal three-phase bus shall be fabricated from silver-plated, electrical grade copper and extend the full length of the switchgear.

B. Bus, including joints, shall be insulated the full length with flame-retardant, non- hygroscopic, track-resistant insulation over its entire length rated 30 kV. The method of bus insulation and the insulating material shall conform to ANSI C37.20.

C. Verify and record that all current-carrying bolts and fasteners are properly torqued with a calibrated torque wrench.

D. All connections, including bus taps, circuit breaker connections, connections to CTs and PTs and transformers, shall be bussed using the same material as the main horizontal bus with silver plated copper and joined with a minimum of two bolts and Belleville washers per joint. After final torquing all bolted connections shall be torque striped. Cable connections are not permitted.

E. Hardware shall be silicon bronze.

F. Continuous current rating of all main bus and circuit breaker connections shall be at least 1200 A.

G. Buses and bus connections shall be adequate to withstand thermal and mechanical stresses associated with short-circuit currents equal to the momentary and 2-second rating of the circuit breaker.

H. A copper ground bus, not less than 2 inch by 1/4 inch, shall extend the length of the AC switchgear assembly and be bonded to each switchgear section by solidly bolting the bus to a non-removable structural member. After final torquing all bolted connections shall be torque striped.

2.06 UTILITY INCOMING SECTION

A. Provide supplementary equipment as required to connect switchgear relays and power meter to Sound Transit SCADA system.

B. Provide utility metering sections as noted on Contract Drawings for substations meeting EUSERC requirements and complying with Utility standards.

C. Surge arrestors shall comply with IEEE C62.11, distribution class, metal oxide varistor type, connected to each phase of incoming circuit and ahead of disconnecting device. Rated voltage to be line-to-line of line-to-neutral.

2.07 PROTECTIVE RELAYS

A. Protective relays shall be of the microprocessor-based IED (Intelligent Electronic Devices) type capable of interconnecting with programmable control (PLC) supervisory devices and shall be flush mounted, with wiring connections on the back of the relay.

B. Protective relays shall be provided with integral test switches.

C. Protective relays shall have rustproof metal or high-impact plastic rectangular cases.

D. Contacts shall be silver-plated and non-welding. Provide relays conforming to the applicable sections of IEEE C37.90.

E. Devices including switches, relays, indicating lights and test plugs shall be arranged to be conveniently accessible and easily visible. The grouping shall be modular and place related functions in proximity.

F. Devices shall be mounted plumb and square with the lines of the panels and as recommended by the manufacturer. Relays or devices shall be mounted on hinged or removable panels and shall not be mounted on a fixed portion of the switchgear.

G. Design metering compartment to avoid wiring congestion. Auxiliary devices shall match the general appearance as far as possible with frames of a compatible color.

H. Devices of the same general type shall be manufactured by the same company and shall be similarly arranged and mounted.

I. At a minimum, the following protective and monitoring devices shall be provided as shown on the one-line drawings. Additional protective devices recommended by Contractor or equipment manufacturers may be installed with Resident Engineer approval:

1. Phase Fault Overcurrent Relays:

a. The primary function of the phase overcurrent relays (Device 50/51) shall be to provide overload and fault protection for loads served.

b. Relays shall be designed to compile a composite time overcurrent characteristic curve which shall best match the normal and overload requirements of the load and to match the thermal and mechanical withstand of transformers.

c. Each relay, (Device 50/51) shall provide for both instantaneous and time delay overcurrent protection.

2. Ground Fault Overcurrent Relay:

a. A residual instantaneous and time delay relay (Device 50N/51N) shall be provided and connected in such a way as to provide sensitive ground fault detection.

b. This relay shall be field adjustable.

3. Loss of Phase/Phase Sequence:

a. The three-phase voltage protective relay (Device 47) shall be provided and connected in such a way as to provide open-phase protection.

b. This relay shall contain a field adjustable time delay.

4. Undervoltage:

a. The primary function of the undervoltage relay (Device 27) shall be to trip and annunciate an AC input voltage of less than 80 percent of the nominal voltage.

b. This relay shall also trip and annunciate a loss of voltage due to utility outage. The relay shall be provided with a 0.5 to 4 second adjustable time delay before tripping.

5. Reverse Power:

a. Provide reverse power (Device 32) protective relaying function in incoming feeder cubicles connecting to utility service switchgear. This device shall trip

and lock-out associated circuit breaker when it detects a flow of power from Sound Transit back toward the utility.

6. Lockout:

a. Lockout relay (Device 86) shall be provided on the AC circuit breaker compartment. A pistol-grip switch shall be provided for resetting of the lockout relay.

b. Provide indication of "lockout" and "normal" at the resetswitch.

2.08 INSTRUMENTS AND METERS

A. The accuracy of all indicating instruments shall be within 1 percent of full-scale reading.

B. Voltmeters and ammeters shall be suitably rated for use with the corresponding transformer.

C. Scales shall be of a suitable range, equal to the associated potential or current transformer primary rating.

D. Provide incoming-line phase-selector switches for connection to the line transformers for the ammeter and voltmeter.

E. Provide power meter in accordance with Electrical Power Monitoring section.

2.09 INSTRUMENT TRANSFORMERS

A. Instrument transformers shall conform to IEEE C57.13, with the additional requirements indicated below.

B. Current Transformers:

1. Shall be capable of withstanding thermal and mechanical ratings of the circuit breaker.

2. Molded-rubber or epoxy construction, wound-type orbushing-mounted.

3. Wound-Type Current Transformers.

a. Provide separate compartment isolated from the control panel and all other equipment.

b. Provide a mounting frame which bolts securely to the switchgearframe.

c. Transformers shall have full-wave impulse insulation level of 125kV.

d. Secondary terminal blocks shall have covers with integral shorting bars and secondary wiring shall be run to readily identifiable terminal block points in the control compartment.

e. Terminal block points shall also have integral shorting bars for the current transformer leads.

4. Bushing-Type Current Transformers:

a. Low-voltage, ring-core, high-accuracy type designed for secure mounting on the primary contact support bushings.

5. Accuracy:

a. Protective Relaying: Current transformers shall satisfy the requirements for relaying accuracy classification, under the burdens imposed by the devices as specified.

b. Power Meters:

1) Current transformers shall be metering class 0.15 at burden B0.2.

2) If this metering accuracy is not available, perform an analysis of expected accuracy of metering equipment for loads from 1 percent to 100 percent of actual load rating and submit for approval.

3) Bushing current transformers that will not provide accuracy of plus or minus 0.3 percent at 10 percent load and plus or minus 0.5 percent at full load will be rejected and require installation of wound-type current transformers.

C. Potential Transformers:

1. Drawout-type, molded-rubber or epoxy construction.

2. Transformers shall have full-wave impulse insulation level of 150 kV.

3. Primary and secondary circuits of all potential transformers shall be fused by means of non-renewable cartridge-type fuses meeting requirements of IEEE C37.46.

4. Grounding: The potential transformer shall be visibly grounded when the primary circuit is disconnected and in position for inspection.

5. Fuses:

a. All primary fuses shall be completely disconnected before access can be obtained to either the transformer or its high-voltage fuses.

b. Secondary circuit fuses shall be installed in the low-voltage circuits and shall be located to permit replacement when the switchgear is in operation.

6. Rating: All potential transformers shall be adequately rated in accordance with the burden requirements of the accuracy classification and capable of carrying rated load continuously without excessive heating or damage.

7. Accuracy: Potential transformers for power meters shall have accuracy class 0.3 at W, X, M, and Y burden.

2.10 SCADA

A. Devices furnished under this Contract shall be provided with additional terminations within their respective control enclosures for connection to the Sound Transit supervisory control system. Refer to Contract Drawings for typical SCADA points for each type of circuit breaker.

2.11 GROUND AND TEST DEVICE

A. Ground and test device shall be readily adaptable to line or load terminals, which can be connected onto individual phases with ground connector for external connection to station ground. Provide standard “ball” type connectors for positive connection to studs on ground and test device terminals.

B. Device shall be capable of being racked into cubicle with circuit breaker racking handle.

C. Line and load terminals and phases shall be separated by barriers.

D. Provide ports on front of ground and test devices for insertion of standard “Biddle” high voltage tester and grounding “octopus”.

E. Provide visual means of viewing line and load terminals.

F. Device shall be continuously grounded as it is inserted into cubicle.

G. Ground Octopus:

1. Three-phase.

2. Connectors: Three ball/socket-type, compatible with grounding studs on ground and test device and one C-clamp type for connection to ground bus.

3. Readily connected with a hot stick.

4. Length: Sufficient to allow connection to the closest ground bus when ground and test device is fully inserted into each AC breaker cubicle.

2.12 TRANSFER TABLE

A. Provide transfer tables for removing and lowering PTs and draw-out fuse trunions.

B. Table shall be capable of being raised and lowered hydraulically from floor to trunion levels.

2.13 SOURCE QUALITY CONTROL

A. Factory Design Tests:

1. Tests shall consist of all design tests as specified in IEEE C37.20.2.

2. Perform tests on the AC switchgear assembly and each component of the AC switchgear.

3. The main AC circuit breaker test shall be performed in accordance with the design tests as described in IEEE C37.09.

B. Factory Production Tests:

1. Perform on AC switchgear in accordance with IEEE C37.20.2:

a. Dielectric tests.

b. Mechanical operation tests.

c. Electrical operation and control wiring tests, except that the control wiring continuity shall be verified by actual electrical operation of control devices.

d. Grounding of instrument transformer cases.

2. Perform on each AC circuit breaker in accordance with IEEE C37.09 prior to mounting inside AC switchgear:

a. Nameplate check.

b. Control and secondary wiring checks.

c. Clearance and mechanical adjustment check tests.

d. Mechanical operation tests.

e. Timing tests.

f. Stored energy system tests.

g. Conductivity of the current path test.

h. Low-frequency withstand voltage tests on major insulation components.

i. Current transformer.

j. Resistors and coils.

3. Meters, Instruments and Instrument Transformers:

a. Check for accuracy, performance and operation in accordance with IEEE C57.13.

PART 3 - EXECUTION

3.01 INSTALLATION

A. Switchgear shall be installed in accordance with manufacturer's installation instructions, NECA 1, and NECA 430.

3.02 PROTECTIVE DEVICE COORDINATION

A. Perform a Coordination Study for the AC system to ensure that the protective devices will function together, in conformance with System Studies section.

B. Coordination study shall be approved by Sound Transit prior to field configuration of protective devices.

3.03 SURGE ARRESTER GROUNDING

A. The surge arrester ground terminals shall be connected directly to the switchgear ground bus connected to the station grounding electrode. Surge arresters in Service Switchgear are furnished by Utility.

3.04 FIELD QUALITY CONTROL

A. AC Switchgear:

1. The following tests shall be performed after installation of the AC switchgear:

a. Continuity and insulation resistance tests phase-to-ground and phase-to-phase, for all buses with a 2500 Vdc megohmmeter for one minute.

b. High potential test to ground and between phases on medium-voltage buses with circuit breakers racked-in and closed.

2. Verification of proper operation of each interlock and protective device.

a. Test of each AC protection relay using a three-phase current/voltage injection test device. Test device shall have the following functions:

1) Current/voltage magnitude.

2) Frequency and angle are adjustable per phase.

3) Internal digital timer is programmable to start and stop.

b. Each recommended AC relay protection setting shall be verified and tested.

END OF SECTION

SECTION 26 33 53

UNINTERRUPTIBLE POWER SUPPLY AND LIGHTING INVERTER

PART 1 - GENERAL

1.01 SUMMARY

A. Section includes:

1. Requirements for solid state double conversion type uninterruptible power supply system complete with battery bank, battery circuit breaker, internal bypass/isolation switch and external maintenance bypass circuit breaker panel. The transfer from normal power to battery power shall utilize a true no break, sine wave output system to maintain a zero transfer time. The system shall be capable of powering any combination of electronic ballast, power factor corrected ballast, and self-ballasted fluorescent, incandescent or HID lighting, building management systems, and any other critical voltage or frequency-sensitive electronic loads. The system shall operate from 0-100 percent loading and be rated to deliver its full kW rating at unity power factor.

1.02 REFERENCES

A. This Section incorporates by reference the latest revisions of the following documents:

1. American National Standards Institute (ANSI):

a. ANSI C62.41 (IEEE 587): Recommended practice on Surge Voltages in Low-Voltage AC Power Circuits.

2. National Electrical Manufacturers Association (NEMA):

a. NEMA PE-1: Uninterruptible Power Systems.

b. NEMA 250: Enclosure for Electrical Equipment.

3. Underwriters Laboratories Inc. (UL):

a. UL 1778: Uninterruptible Power Supply Equipment.

b. UL 924A: Standard for Emergency Lighting and Power Equipment.

4. National Fire Protection Association (NFPA):

a. NFPA 70 (National Fire Protection Association) – National Electrical Code.

b. NFPA 75: Electronic Computer / Data Processing Equipment.

5. Institute of Electrical and Electronic Engineers (IEEE):

a. IEEE 1184: Guide for Selection and Sizing of Batteries for Uninterruptible Power System.

b. IEEE 587: Recommended practices on surge voltages in low voltage power circuits.

6. NETA ATS: International Electrical Testing Association, Electrical Testing Specifications.

7. Federal Communications Commission (FCC):

a. FCC Part 15 Class A.

8. National Institute of Standards and Technology (NIST)

B. Definitions:

1. EMI: Electromagnetic interference.

2. LCD: Liquid-crystal display.

3. LED: Light-emitting diode.

4. THD: Total harmonic distortion.

5. UPS: Uninterruptible power supply.

1.03 SUBMITTALS

A. Provide preliminary, final, and as-built submittals for subsystems and products specified in this section. Include plans, elevations, sections and attachment details.

B. Product Data: Include data on features, ratings, and performance for each uninterruptible power supply component indicated.

C. Shop Drawings: Detail assemblies of equipment indicating dimensions, weights, components, and location and identification of each field connection. Show access, workspace, and clearance requirements; details of control panels; battery arrangement and mounting details.

D. Wiring Diagram: Detail internal and interconnecting wiring, power, signal, and control wiring. Differentiate between field-installed and factory-installed wiring and components.

E. Dimensioned Outline Drawings of Equipment Unit: Identify weight and center of gravity and locate and describe mounting and anchorage provisions for each individual cabinet or enclosure.

F. Detailed description of equipment anchorage devices on which the certification is based and their installation requirements.

G. Manufacturer Certificates: Signed by manufacturers certifying that they comply with requirements.

H. Qualification Data: For firms and persons specified in “Quality Assurance” Article.

I. Factory Test Reports: Comply with specified requirements. Submit factory test reports within 10 days of test completion.

J. Field Test Reports: Indicate test results compared with specified performance requirements, and provide justification and resolution of differences if values do not agree. Submit test reports within 10 days of test completion.

K. Maintenance Data:

1. List of spare parts and replacement components recommended being stored at project site for ready access.

2. Detailed operating instructions covering operation under both normal and abnormal conditions.

3. Warranties: Special warranties specified in this Section.

L. Manufacturer Seismic Qualification Certification: Submit certification that UPS equipment will withstand seismic forces in accordance with Uniform Building Code (UBC) for Washington State seismic zone three requirements.

M. Extra Materials

1. Local field service organization shall stock extra materials described below that match products installed and that are packaged with protective covering for storage and identified with labels describing contents.

2. Provide toll free direct phone number.

3. Fuses: One for every ten of each type and rating, but not less than one of each.

4. Cabinet Ventilation Filters: One complete set.

5. One spare circuit board for each critical circuit.

1.04 QUALITY ASSURANCE

A. Qualifications

1. UPS manufacturer shall have a minimum of twenty years' experience in the design, manufacture and testing of solid-state UPS systems. A list of installed UPS systems of the same type as the manufacturer proposes to furnish for this application shall be supplied upon request.

2. The UPS manufacturer shall maintain a staffed 7x24x365 call center for technical and emergency support.

3. Field Engineering Support: The UPS manufacturer shall directly employ a nationwide field service department staffed by factory-trained field service engineers dedicated to startup, maintenance, and repair of UPS equipment. The organization shall consist of local offices managed from a central location. Field engineers shall be deployed in key population areas to provide on-site emergency response within 24 hours. A map of the United States showing the location of all field service offices must be submitted with the proposal. Third-party maintenance will not be accepted.

4. Spare Parts Support: Parts supplies shall be located in the field to provide 80 percent of all emergency needs. The factory shall serve as the central stocking facility where a dedicated supply of all parts shall be available within 24 hours.

5. Product Enhancement Program: The UPS manufacturer shall make available feature upgrade service offerings to all users as they are developed. These upgrades shall be available as optional field-installable kits.

6. Maintenance Contracts: A complete range of preventative and corrective maintenance contracts shall be provided and offered with the proposal. Under these contracts, the manufacturer shall maintain the user's equipment to the latest factory revisions.

7. Source Limitations: Obtain the UPS and associated components specified in this Section from a single manufacturer with responsibility for entire UPS installation.

B. The UPS manufacturer shall have ISO 9001 certification for engineering/R&D, manufacturing facilities and service organization.

C. Listing and Labeling: Provide electrical components, devices, and accessories that are Listed and Labeled as defined in NFPA 70, Article 100, by an Independent Testing Laboratory acceptable to the City Electrical Inspector, and marked for intended use for the location and environment in which they are installed. The equipment shall also be labeled "Suitable for use on emergency system" in accordance with NEC 700-3.

1.05 DELIVERY, STORAGE AND HANDLING

A. Deliver equipment in fully enclosed vehicles after specified environmental conditions have been permanently established in spaces where equipment is to be placed.

B. Store equipment in spaces with environments controlled within manufacturer's ambient temperature and humidity tolerances for non-operating equipment.

1.06 ENVIRONMENTAL

A. The UPS shall withstand any combination of the following external environmental conditions without operational degradation.

1. Operating Temperature:

a. UPS Module 0 degrees C to + 40 degrees C (32 degrees F to 104 degrees F) without de-rating.

b. Battery 77 degrees F ± 9 degrees F (25 degrees C ± 5 degrees C)

2. Storage Temperature:

a. UPS Module - 25 degrees C to + 40 degrees C (-13 degrees F to 104 degrees F). Battery -4 degrees F to 92 degrees F (-20 degrees C to 33 degrees C).

3. Relative Humidity (operating and storage): 95 percent maximum non-condensing.

4. Elevation:

a. Operational: 3300 ft (1000 m) maximum without de-rating.

5. Storage/Transportation:

a. Up to 40,000 feet (12,200m) above mean sea level.

1.07 WARRANTY

A. Warranties, General: Special warranties specified in this Article shall be in addition to, and run concurrent with, other warranties made under requirements of these Contract Specifications.

B. Special Battery Warranties: Written warranty, signed by manufacturer and Installer agreeing to replace UPS system storage batteries that fail in materials or workmanship within specified warranty period.

C. Warranted Cycle Life for Sealed Lead-Acid Batteries: Equal to or greater than that represented in manufacturer's published table based on annual average battery temperature of 77 degrees F.

D. Special UPS Warranties: Written warranties, signed by manufacturer and Installer agreeing to replace components that fail in materials or workmanship within special warranty period.

E. Special Warranty Period: two years:

1. One-year limited factory warranty shall include replacement coverage for the UPS parts for a period of 18 months from shipment or 12 months from start-up, whichever occurs sooner.

~~2.~~ One-year service protection package shall include 7x24 on-site repair/replacement labor for UPS parts and batteries; 7x24 technical support coverage; and 7x24 remote monitoring service (with monthly reports for UPS and battery performance). Standard response time shall be 8 hours from receipt of call. Manufacturer shall also offer, as an option, 7x24 on-site service support with guaranteed response times of 2 hours in certain major metropolitan areas.

3. Manufacturer shall also include Start-up services consisting of: 5x8 Start-up service of UPS and batteries, with option for 7x24 Start-up. On-site user training, Site Audit, installation and commissioning of monitoring service, and validation of one-year limited factory warranty will be performed during the start-up.

4. Manufacturer shall also offer an optional service plan to provide 7x24 on-site coverage (preventive and corrective) for UPS and batteries, guaranteed response time, remote monitoring, Web access to service site history, annual Site Audit, UPS and battery preventive maintenance visit, and discounts on upgrade and modification kits. Manufacturer shall also provide an optional battery service plan to provide parts-and-labor coverage for partial and full battery strings, either with preventive maintenance or replacement coverage.

PART 2 - PRODUCTS

2.01 UPS SYSTEM DESCRIPTION

A. Safety:

1. The UPS shall be certified by Underwriters Laboratories in accordance with UL 1778.

2. The UPS shall be certified by Underwriters Laboratories in accordance with UL 924.

B. UPS System Components: The UPS system shall consist of the following main components:

1. UPS module containing a Rectifier, Inverter, Battery Charger, Static Bypass, and associated Control and Monitor Panel.

2. Battery strings in Line-and-Match Battery Cabinets.

3. Line-and-Match accessory cabinets for transformer, maintenance bypass, parallel tie, and distribution applications.

4. External maintenance bypass circuit breaker panel.

C. UPS Module Modes of Operation: The UPS Module shall operate as an on-line double conversion, fully automatic system in the following modes:

1. Normal: Utilizing commercial AC power, the critical load shall be continuously supplied by the Inverter. The Inverter shall power the load while regulating both voltage and frequency. The Rectifier shall derive power from the commercial AC source and shall supply DC power to the Inverter. Simultaneously, the Battery Charger shall charge the battery.

2. Battery: Upon failure of the commercial AC power, the critical load shall continue to be supplied by the Inverter, which shall obtain power from the batteries without any operator intervention. There shall be no interruption to the critical load upon failure or restoration of the commercial AC source.

3. Recharge: Upon restoration of the AC source, the Charger shall recharge the batteries and simultaneously the Rectifier shall provide power to the Inverter. This shall be an automatic function and shall cause no interruption to the critical load.

4. Bypass: If the UPS module must be taken out of the Normal mode for overload, load fault, or internal failures, the static bypass switch shall automatically transfer the critical load to the commercial AC power. Return from Bypass mode to Normal mode of operation shall be automatic. No-break transfer to and from Bypass mode shall be capable of being initiated manually from the front panel.

2.02 MANUFACTURERS

A. Manufacturers: Subject to compliance with requirements, provide products by one of the following:

1. Eaton Corporation.

2. SolidState controls Inc.

3. Liebert Corp.

4. Controlled Power Company.

5. Approved Equal as approved by Resident Engineer.

B. Manufacturers (Lighting Inverters):

1. Emergi-Lite Emergi-Power Systems.

2. Barron Exitronix.

3. Dual-Lite LSN Series Unverter Systems.

4. Myers Illuminator.

5. Perfect Power Systems.

6. Chloride Systems, Leibert EXM.

2.03 MANUFACTURED UNITS

A. Output Load Capacity: 1) Three Phase, 0.8 lagging power factor. 2) Single Phase, 0.8 lagging power factor.

B. UPS shall perform as specified in this Article while supplying rated full-load current, composed of any combination of linear and nonlinear load, up to 100 percent nonlinear load with a load crest factor of 3.0, under the following conditions or combinations of the following conditions:

1. Inverter is switched to battery source.

2. Steady-state ac input voltage deviates up to plus or minus 10 percent from nominal voltage.

3. Steady-state input frequency deviates up to plus or minus 5 percent from nominal frequency.

4. Linear load harmonic distortion capability: Output voltage THD of less than 2 percent for 100 percent linear load.

5. Non-linear load harmonic distortion capability: Output voltage THD of less than 5 percent for 100 percent non-linear load when tested using the non-linear load described in IEC 62040-3 connected line to neutral.

6. Output Frequency: 60 Hz plus/minus 0.5 percent over full range of input voltage, load and battery voltage.

7. Load is 50 percent unbalanced continuously.

C. Minimum Duration of Supply: If battery is sole energy source supplying UPS-rated full-output load current at 80 percent power factor, duration of supply is 90 minutes.

D. Input Voltage Tolerance: System steady state and transient output performance remains within specified tolerances when steady-state ac input voltage varies plus 10, minus 20 percent from nominal voltage.

E. Maximum Acoustical Noise: 65 dBA measured one meter from the surface of the UPS.

F. Maximum Energizing Inrush Current: Six times the full-load current.

G. Maximum AC Output-Voltage Regulation for Loads up to 50 percent Unbalanced: Plus or minus 2 percent over the full range of battery voltage.

H. Output Frequency: 60 Hz, plus or minus 0.5 percent over the full range of input voltage, load, and battery voltage.

I. Maximum Harmonic Content of Output-Voltage Waveform: Five percent RMS total and three percent RMS for any single harmonic, for 100 percent rated nonlinear load current with a load crest factor of 3.0.

J. Minimum Overload Capacity of UPS at Rated Voltage: 125 percent of full-load rating for 10 minutes without bypass source, and 150 percent for 30 seconds without bypass source.

K. Input Power Factor: A minimum of 0.90 lagging when supply voltage and current are at nominal rated values and UPS is supplying rated full-load current.

L. EMI Emissions: Comply with FCC Rules and Regulations, 47 CFR 15 for Class A.

M. Electronic Equipment: Solid-state devices using hermetically sealed, semiconductor elements. Devices include rectifier-charger, inverter, static bypass transfer switch, and system controls.

N. Enclosure: Comply with NEMA 250, Type 3R, unless otherwise indicated:

1. The cabinet doors and louvers shall require tools for access.

2. Provide casters and leveling feet.

3. Front access only for servicing.

4. The overall enclosure width and depth shall not exceed the space allocated on the Contract Drawings.

O. Control Assemblies: Mount on modular plug-ins, readily accessible for maintenance.

P. Surge Suppression: Protect internal UPS components from surges that enter at each AC power input connection including main disconnect, static bypass transfer switch, and maintenance bypass/isolation switch. Protect rectifier-charger, inverter, controls, and output components:

1. Use factory-installed surge suppressors tested according to IEEE C62.41, Category B.

2. Additional Surge Protection: Protect internal UPS components from low frequency, high-energy voltage surges described in IEEE C62.41. Design the circuits connecting with external power sources and select circuit elements, conductors, conventional surge suppressors, and rectifier components and controls so input assemblies will have adequate mechanical strength and thermal and current-carrying capacity to withstand stresses imposed by 40-Hz, 180 percent voltage surges described in IEEE C62.41.

Q. Capacity Upgrade Capability: Arrange wiring, controls, and modular component plug-in provisions to permit future 25 percent increase in UPS capacity.

R. Seismic-Restraint Design: UPS assemblies, subassemblies, and components; and fastenings and supports, mounting, and anchorage devices for them, shall be designed and fabricated to withstand static and seismic zone three forces in all directions.

S. UPS Cabinet Ventilation: Cooling of the UPS shall be by forced air. Low-velocity fans shall be used to minimize audible noise output. Fan power shall be provided by the UPS

output. Cabinet ventilation shall be incompliance with the Seattle Mechanical Code Section 502.5.

T. Output Circuit Neutral Bus, Conductor, and Terminal Ampacity: Rated phase current times a multiple of 2.0, minimum.

U. Capacity Upgrade Capability:

1. Selected systems shall be able to accept a field installed power upgrade to the next higher power rating without an increase in cabinet size.

2.04 COMPONENTS

A. Rectifier-Charger:

1. Capacity: Adequate to supply the inverter during full-rated output load conditions and simultaneously recharge the battery from fully discharged condition to 95 percent of full charge within 10 times the rated discharge time for duration of supply under battery power at full load.

2. Output Ripple: Limited by output filtration to less than 0.5 percent of rated current, peak to peak.

3. Rectifier-Charger Control Circuits: Immune to frequency variations within rated frequency ranges of normal and emergency power sources.

a. Response Time: Field adjustable for maximum compatibility with portable generator-set power source.

4. Battery Float-Charging Conditions: Comply with battery manufacturer written instructions for battery terminal voltage and charging current required for maximum battery life.

B. Inverter (Component of UPS):

1. Description: Pulse-width modulated, with sinusoidal output.

2. Description: Pulse-width modulated, with sinusoidal output. Include a bypass phase synchronization window adjustment to optimize compatibility with portable engine-generator-set power source.

C. Static Bypass Transfer Switch:

1. Description: Solid-state switching device providing uninterrupted transfer. A contactor or electrically operated circuit breaker automatically provides electrical isolation for the switch.

2. Switch Rating: Continuous duty at the rated full-load current of the UPS, minimum.

D. Battery:

1. Description: Sealed, valve-regulated, recombinant, lead-calcium units, factory assembled in an isolated compartment of UPS cabinet, and complete with battery disconnect switch.

E. Maintenance Bypass/Isolation:

1. Description: Manually operated arrangement of switching devices with mechanically actuated contact mechanism arranged to route the flow of power to the load around the rectifier-charger, inverter, and static bypass transfer switch:

    a. Switch shall be interlocked to prevent interrupting power to the load when switching to the bypass mode.

    b. Switch shall isolate other UPS components electrically to permit safe servicing.

2. Comply with NEMA PB 2 “Dead-Front Distribution Switchboards” and UL 891 “Dead-Front Switchboards.”

3. Switch Rating: Continuous duty at rated full-load current of UPS.

4. Mounting Provision: External wall mount.

5. Key interlock requires unlocking maintenance bypass/isolation switch before switching from normal position with key that is released only when the UPS is bypassed by the static bypass transfer switch. Lock is designed specifically for electrical component interlocking.

F. Monitoring by Remote Computer:

1. Description: Communication module in unit control panel shall provide capability for remote monitoring of status, parameters, and alarms. The remote computer and the connecting signal wiring are not included in this Section. Include the following features:

    a. LON Mark compatible network interface units, or Approved Equal as approved by Resident Engineer.

    b. Software designed for control and monitoring of UPS functions and to provide on –screen explanations, interpretations, diagnosis, action guidance, and instructions for use of monitoring indications and development of meaningful reports. Permit storage and analysis of power-line transient records. Design for Microsoft Windows application in an IBM-compatible computer, which is not included in this Section.

G. Basic Battery Monitoring

1. Battery Ground-Fault Detector: Initiates visual and audible alarm when resistance to ground of positive or negative bus of battery is less than 5,000 ohms.

2. Battery compartment smoke/high-temperature detector initiates a visual and audible alarm when smoke or a temperature greater than 167 degrees F occurs within the compartment.

3. Annunciation of Alarms: At UPS control panel and at LCC.

4. An optional temperature sensor shall be available to monitor the ambient temperature internal to the battery cabinet. If the ambient temperature increases, the UPS system charger shall automatically reduce the charging voltage to a level recommended by the battery manufacturer. If the ambient temperature is decreased the UPS shall automatically increase the battery charge voltage to that recommended by the battery manufacturer.

2.05 MECHANICAL DESIGN

A. Enclosures: The UPS shall be housed in free-standing double front enclosures (safety shields behind doors) equipped with casters and leveling feet. The enclosures shall be designed for computer room applications. Front doors shall have locks to prevent unauthorized entry.

B. Ventilation: The UPS shall be designed for forced-air cooling. Air inlets shall be on the front of the unit. Air outlets shall be on the top. Eighteen inches of clearance over the UPS outlets shall be required for proper air circulation. Air filters shall be commonly available sizes.

C. No back or side clearance or access shall be required for the system. The back and side enclosure covers shall be capable of being located directly adjacent to a wall.

D. Cable entry: Standard cable entry for the UPS cabinet shall be through either the enclosure bottom or top. A dedicated wireway shall be provided within the UPS cabinet for routing user input and output wiring.

E. Front access: All serviceable subassemblies shall be modular and capable of being replaced from the front of the UPS (front access only required). Side or rear access for installation, service, repair or maintenance of the UPS system shall not be required.

F. Service area requirements: The system shall require no more than thirty-six (36) inches of front service access room and shall not require side or rear access for service or installation.

2.06 CONTROLS AND INDICATORS

A. Microprocessor controlled circuitry: The UPS controls shall have the following design and operating characteristics:

1. Fully automatic operation of the UPS shall be provided through the use of microprocessor controlled circuitry to provide consistent operational responses.

2. All operating and protection parameters shall be firmware controlled, thus eliminating a need for manual adjustments. The logic shall include system test capability to facilitate maintenance and troubleshooting. Printed circuit board replacement shall be possible without requiring calibration.

3. Start-up and transfers shall be automatic functions.

B. Digital Front Panel Display: The UPS control panel shall be a digital front panel display with a backlit LCD display. The LCD shall display UPS status, metering, battery status, alarm/event queue, active alarms and UPS configurations. The front panel display shall show a system mimic diagram with an outlined power path, current operating mode and event logs.

C. Control Panel Indicators: The UPS control panel shall provide the following monitoring functions with indicator LED's:

1. NORMAL: This shall indicate that the commercial AC utility or generator source is supplying power to the rectifier and the inverter is supporting the critical load. A text message shall indicate if the bypass line is not within tolerance.

2. BYPASS: This shall indicate that the UPS has transferred the load to the bypass circuit.

3. BATTERY: This shall indicate that the commercial AC utility or generator source has failed and the battery is supplying power to the inverter, which is supporting the load. A text message shall indicate if the battery charge is low or if the battery is installed but disconnected.

4. ALARM: This shall indicate that the UPS detects an alarm condition, outlined in detail in the operator's manual.

D. Control Panel Controls: Per UL 924 standards, the control push buttons must be protected, preventing the push buttons from being actuated without the use of a "tool." The UPS control panel shall provide the following functions from front panel push buttons:

1. EVENTS: Displays the list of Active System Events and a historical log of system events. Historical logs shall include a detailed time stamped list of the latest 128 events.

2. METERS: Displays performance meters for the system or critical load. When selected, the front display shall show individual screens of input parameters, output parameters or bypass parameters including; voltage, current and frequency. In addition, the battery display shall show runtime remaining.

3. CONTROLS: Displays a System Controls screen. Allows selection of operating mode, normal, bypass, charger on/off and Power Module on/off.

4. SETUP: Allows display contrast, date and time information serial communication port configuration and display of firmware revision numbers.

5. RETURN: Confirms selection or returns to previous screen.

E. Interface panel: The UPS shall be equipped with an interface panel, located behind a protective cover, which provides the following signals and communication features in a Class 2 environment:

1. Alarm contact: A dry contact for annunciating a summary alarm shall be provided for customer use. This contact shall be Form "C" capable of supplying both N/O and N/C contacts. Contact ratings shall be 5A max at a voltage not to exceed 28VDC or 277VAC.

2. RS232 (EIA / TIA-232) communications interface: Circuitry shall be provided for one RS232 (EIA / TIA-232) communication port for connection to automated service department diagnostic tools. This port may be used with simple ("dumb") terminals to gain remote access to all unit operation information.

3. Building alarms: Two inputs shall be provided for monitoring the status of external dry contacts. Building alarms shall be set up through the UPS configuration mode function on the RS232 (EIA / TIA-232) port.

4. External EPO contacts: Shall be provided to connect an external remote emergency power off switch to shut down the UPS and de-energize the critical load.

5. Battery control contacts: Contacts shall be provided to connect the battery UVR and auxiliary signals from a battery breaker or battery disconnect switch.

6. External bypass indicator connection: A connection point shall be provided to acknowledge that an external maintenance bypass has been closed around the UPS, placing the critical load on utility power.

7. The system shall have options to add four (4) additional building alarms, 384 logged events, 4 additional languages, Mandarin or Russian as a primary language.

F. Manual Operable Test Switch:

1. Per UL 924 standards, the UPS shall be provided with an automatic load control switching device or manually operable test switch, or provisions for the connection of an external test switch, to simulate the conditions under which the load control switching device is intended to operate (such as loss of the normal supply).

2. For the purpose of meeting the requirement, the test switch is considered accessible only to authorized persons if it is mounted within an enclosure, or if it is of the key-operated type. If the test switch is mounted within an enclosure, the cover of the enclosure shall be hinged.

2.07 SOURCE QUALITY CONTROL

A. Factory test complete UPS, including battery, before shipment. Include the following tests:

1. Functional test and demonstration of all functions, controls, indicators, sensors, and protective devices.

2. Full-load test.

3. Transient-load response test.

4. Overload test.

5. Power failure test.

B. Observation of Test: Give 14 days' advance notice of test and provide opportunity for Resident Engineer to observe tests.

C. Report test results. Include the following data:

1. Description of input source and output loads used. Describe actions required to simulate source load variation and various operating conditions and malfunctions.

2. List of indications, parameter values, and system responses considered satisfactory for each test action. Include tabulation of actual observations during test.

D. List of instruments and equipment used in factory tests.

2.08 LOCAL RACK OR CABINET MOUNT UPS

A. Output:

1. Output Voltage Distortion: Maximum 5 percent at full load.
2. Output Frequency (Sync to Mains): 57-63 Hz
3. Cret Factor: Maximum 5:1.
4. Waveform Type: Sine Wave.
5. Output Connections: (6) NEMA 5-15R.

B. Input:

1. Nominal Input Voltage: 120 V.
2. Input Frequency: 50/60 Hz +/- 3 Hz (auto sensing).
3. Input Connections: NEMA 5-15P.
4. Cord Length: Minimum 8 feet (2.44 meters).
5. Input voltage range for main operations: 82-144 V.
6. Input voltage adjustable range for mains operation: 75-154 V.

C. Batteries:

1. Battery Type: Maintenance-free sealed Lead-Acid battery with suspended electrolyte: leak proof.

D. Communications and Management:

1. Interface Port(2): DB-9 RS-232, Smart Slot, USB.
2. Control Panel: LED status display with load and battery bar-graphs and On Line, On Battery, Replace Battery, and Overload Indicators.
3. Audible Alarms: Alar, when on battery, distinctive low battery alarm, configurable delays.
4. Emergency Power Off (EPO)

E. Surge Protection and Filtering:

1. Surge Energy Rating: 459 Joules.
2. Filtering: Full time multi=pole noise filtering: 0.3 percent IEEE surge let-through: zero clamping response time: meets UL 1449.

F. Environmental:

1. Operating Environment: Rated for the conditions where installed. For outdoor non-environmentally controlled locations: 0 – 140 degrees F.
2. Operating Relative Humidity: 0 – 95 percent .

3. Online Thermal Dissipation: 89.00 BTU/hr.

G. Conformance: Regulatory Approvals: FCC Part 15 Class A, UL 1778.

PART 3 - EXECUTION

3.01 EXAMINATION

A. Examine elements and surfaces to receive equipment for compliance with installation tolerances and other conditions affecting performance, including, but not limited to, ambient temperature, cooling air circulation, contaminants and disassembly and maintenance space.

B. Proceed with installation only after unsatisfactory conditions have been corrected.

C. Verify installation conditions are representative of the conditions used in the coordination study for the electrical system.

3.02 INSTALLATION

A. Maintain minimum clearances and workspace at equipment according to manufacturer's written instructions and NFPA 70.

B. Connections: Interconnect system components. Make connections to supply and load circuits according to manufacturer's wiring diagrams, unless otherwise indicated.

C. Grounding:

1. Comply with project specifications and NFPA 70 for grounding and bonding requirements for Separately Derived Systems.

D. Identification:

1. Identify components and wiring.

2. Equipment shall be labeled "Suitable for use on emergency systems" in accordance with NEC 700-3.

3. Instructional signs: Install approved legend where instructions or explanations are required for system of equipment operation.

E. Battery Equalization:

1. Equalize charging of battery cells according to manufacturer's written instructions. Record individual-cell voltages.

3.03 FIELD QUALITY CONTROL

A. Manufacturer's Field Service: Engage the services of a factory-authorized service representative to supervise UPS installation, startup, and preliminary testing and adjustment and to participate in final tests, inspections, and adjustments.

B. Electrical Tests and Inspections: Perform tests and inspections according to manufacturer's written instructions and as listed below to demonstrate condition and performance of each component of the UPS:

1. Inspect interiors of enclosures, including the following:

    a. Integrity of mechanical and electrical connections.

    b. Component type and labeling verification.

    c. Ratings of installed components.

2. Test manual and automatic operational features and system protective and alarm functions.

3. Test communication of status and alarms to remote monitoring equipment.

4. Load the system using a variable-load bank to simulate kilovolt amperes, kilowatts, and power factor of loads for the unit's rating. Use instruments calibrated, within the previous 6 months according to National Institute of Standards and Technology (NIST) standards:

    a. Simulate malfunctions to verify protective device operation.

    b. Test duration of supply on emergency, low-battery voltage shutdown, and transfers and restoration due to normal source failure.

    c. Test harmonic content of input and output current less than 25, 50, and 100 percent of rated loads.

    d. Test output voltage under specified transient-load conditions.

    e. Test efficiency at 50, 75, and 100 percent rated loads.

    f. Test remote status and alarm panel functions.

    g. Test battery-monitoring system functions.

    h. Test resistance to ground of battery negative pole.

C. Seismic-restraint inspections shall include the following:

1. Inspect type, size, quantity, arrangement, and proper installation of mounting or anchorage devices.

2. Test mounting and anchorage devices.

3. Verify batteries are properly mounted and secured to battery racks.

D. Correct deficiencies until specified requirements are met.

E. Record of Inspections: Maintain and submit documentation of inspections, including references to manufacturers written instructions and inspection criteria. Include results of inspections.

3.04 CONSTRUCTION

A. Sequence of Operations:

1. Automatic operation includes the following:

a. Normal Conditions: Supply the load with ac power flowing from the normal ac power input terminals, through the rectifier-charger and inverter, with the battery connected in parallel with the rectifier-charger output.

b. Abnormal Supply Conditions: If normal ac supply deviates from specified and adjustable voltage, voltage waveform, or frequency limits, the battery supplies energy to maintain constant, regulated inverter ac power output to the load without switching or disturbance.

c. If normal power fails, energy supplied by the battery through the inverter continues to supply-regulated ac power to the load without switching or disturbance.

d. When power is restored at the normal supply terminals of the system, controls automatically synchronize the inverter with the external source before transferring the load. The rectifier-charger then supplies power to the load through the inverter and simultaneously recharges the battery.

e. If battery becomes discharged and normal supply is available, the rectifier-charger charges the battery. On reaching full charge, the rectifier-charger automatically shifts to a float-charge mode.

f. If any element of the UPS system fails and power is available at the normal supply terminals of the system, the static bypass transfer switch switches the load to the normal ac supply circuit without disturbance or interruption of supply.

g. If a fault occurs in the system supplied by the UPS and current flows in excess of the overload rating of the UPS system, the static bypass transfer switch operates to bypass the fault current to the normal ac supply circuit for fault clearing.

h. When the fault has cleared, the static bypass transfer switch returns the load to the UPS system.

i. If battery is disconnected, the UPS continues to supply power to the load with no degradation of its regulation of voltage and frequency of the output bus.

2. Manual operation includes the following:

a. Turning the inverter off causes the load to be transferred by the static bypass transfer switch directly to the normal ac supply circuit without disturbance or interruption.

b. Turning the inverter on causes the static bypass transfer switch to transfer the load to the inverter.

3. Maintenance Bypass/Isolation Switch Operation: Switch is interlocked so it cannot be operated unless static bypass transfer switch is in the bypass mode. Device provides manual selection between the following three conditions without interrupting supply to the load during switching:

a. Full Isolation: Load is supplied, bypassing the UPS. Normal UPS ac input circuit, static bypass transfer switch, and UPS load terminals are completely disconnected from external circuits.

b. Maintenance Bypass: Load is supplied, bypassing the UPS. UPS ac supply terminals are energized to permit operational checking, but system load terminals are isolated from the load.

c. Normal: Normal UPS ac supply terminals are energized and the load is supplied through either the static bypass transfer switch and UPS rectifier-charger and inverter, or the battery and the inverter.

3.05 DEMONSTRATION

A. Engage a factory-authorized service representative to train Sound Transit maintenance personnel to adjust, operate, and maintain the UPS.

B. Train Sound Transit maintenance personnel in the procedures and schedules for starting and stopping, troubleshooting, servicing, and maintaining equipment.

C. Review data in maintenance manuals. Refer to Section 01 78 23 - Operation and Maintenance Data.

D. Schedule training with Resident Engineer with at least 7 days advance notice.

E. Monitoring and Testing Schedule: Perform monitoring and testing in a single 10-day period:

1. Schedule monitoring and testing activity with Resident Engineer. Provide at least 7 days advance notice.

2. Schedule monitoring and testing after Substantial Completion when UPS is supplying power to its intended load.

F. Monitoring and Testing Instruments: Three-phase, recording power monitors. Instruments shall provide continuous simultaneous monitoring of electrical parameters at input terminals of the UPS and at input terminals of a load served by the UPS. Instruments shall monitor, measure, and graph voltage current and frequency simultaneously and provide full-graphic recordings of the values of those parameters before and during power line disturbances that cause the values to deviate from normal beyond the adjustable threshold values. Instruments shall be capable of recording either on paper or on magnetic media and have a minimum accuracy of plus or minus 2 percent for electrical parameters. Parameters to be monitored include the following:

1. Current: Each phase and neutral and grounding conductors.

2. Voltage: Phase to phase, phase to neutral, phase to ground, and neutral to ground.

3. Frequency transients.

4. Voltage swells and sags.

5. Voltage impulses, phase-to-phase, phase-to-neutral, phase-to-ground, and neutral-to- ground.

6. High-frequency noise.

7. Radio-frequency interference.

8. THD of the above currents and voltages.

9. Harmonic content of currents and voltages above.

G. Monitoring and Testing Procedure:

1. Exploratory Period: For approximately the first 2 days, make recordings at various circuit locations and with various parameter-threshold and sampling-interval settings. Make these preliminary measurements with the objective of identifying optimum UPS, power system, load, and instrumentation set-up conditions for subsequent test and monitoring operations.

2. Remainder of Test Period: Perform continuous monitoring of at least two circuit locations selected on the basis of data obtained during exploratory period.

a. Set thresholds and sampling intervals for recording data at values selected to optimize data on performance of the UPS with respect to values specified in PART 2 – PRODUCTS of this Section, and to highlight any need to adjust, repair, or modify the UPS or any distribution system or load component that may influence its performance or that may require better power quality.

b. Perform load and UPS power source switching and operate the UPS on generator power during portions of the test period.

c. Operate the UPS and UPS loads in each mode of operation permitted by UPS controls and by the power distribution system design.

d. Create and simulate unusual operating conditions, including outages, voltage swells and sags, and voltage, current, and frequency transients that can be performed using loads and devices available as part of the facility's installed systems and equipment. Maintain normal operating loads in operation on system to maximum extent possible during tests.

e. Make adjustments and repairs to UPS, distribution, and load equipment to correct deficiencies disclosed by monitoring and testing and repeat appropriate monitoring and testing to verify success of corrective action.

H. Correlation with Specified UPS Monitoring Functions: Obtain printout recordings of built-in monitoring functions specified for UPS and UPS components in this Section that are simultaneous with those made with portable instruments in this Article.

1. Provide the temporary use of an appropriate personal computer and printer equipped with required connections and software for recording and printing if such units are not available on-site.

2. Correlate printouts with recordings for monitoring performed according to this Article; resolve and report anomalies in and discrepancies between the two sets of records.

I. Documentation: Record test point and sensor locations, instrument settings, and circuit and load conditions for each monitoring summary and power disturbance recording. Correlate simultaneous recordings made on UPS input and load circuits.

J. Analysis of Recorded Data and Report: Review and analyze test observations and recorded data and submit a detailed written report. Include the following in final report:

1. Description of corrective actions performed during monitoring and survey work and their results.

2. Recommendations for further action to provide optimum performance by the UPS.

3. Copies of monitoring summary graphics and graphics illustrating harmonic content of significant voltages and currents.

4. Copies of graphics of power disturbance recordings that illustrate findings, conclusions, and recommendations.

5. Recommendations for operating, adjusting, or revising UPS controls.

6. Recommendation for alterations to the UPS installation.

7. Recommendation for adjusting or revising generator-set or automatic transfer switch installations or their controls.

8. Recommendations for power distribution system revisions.

9. Recommendations for adjusting or revising electrical loads, or their connections or controls.

K. Interim and Final Reports: Provide an interim report at the end of each test period and final comprehensive report at the end of the final test and analysis period.

END OF SECTION

SECTION 26 42 55

TRACK RESISTANCE TESTING

PART 1 - GENERAL

1.01 SUMMARY

A. Section includes:

1. Requirements for testing trackwork to determine the track-to-earth resistance values and rail-to-rail resistance values of the running rails.

B. The procedures presented in this Section are general guidelines for the measurement of track-to-earth resistance and rail-to-rail resistance as construction progresses. These procedures shall be modified to suit actual field conditions and the electrical networks established by the trackwork that results from continuing construction.

C. The Contractor shall perform the testing set forth in this Section. It is the Contractor's responsibility to construct trackwork that meets the established criteria. Repair or replace any trackwork found deficient at the Contractor's expense with no additional costs to Sound Transit.

1.02 REFERENCES

A. This Section incorporates by reference the latest revisions of the following documents:

1. ASTM International (ASTM).

a. ASTM G165 Standard Practice for Determining Rail-to-Earth Resistance.

1.03 SUBMITTALS

A. Submit:

1. Testing Agency Qualifications:

a. Testing firm qualifications, including resumes and certifications for all testing personnel and supervisors.

2. Testing Plan:

a. The test plan including the schedule for work, procedures, testing forms, test methods, acceptance criteria, and equipment to be used.

3. Test Reports:

a. All trackwork isolation testing data, records, calculations, results, and reports. Test submittals shall include sufficient information so that the results are identifiable and traceable to installed components or locations.

1.04 QUALITY ASSURANCE

A. The Contractor shall employ an independent corrosion control firm to supervise installation and to perform all installation testing of the trackwork isolation system including, but not limited to, high voltage testing of rail boot material, pre-installation inspection, post

installation testing of the track-to-earth resistance, post installation testing of the rail-to-rail resistance, and post installation testing of the insulating rail joints. The independent corrosion control firm shall have been continuously engaged in the field of corrosion control testing related to DC electrified transit systems for a minimum of five years and shall have the following qualifications:

1. Registered professional corrosion engineer or NACE International Certified Cathodic Protection Specialist available to manage this corrosion control project.

2. NACE International certified Cathodic Protection Specialists and Corrosion Technicians available to perform the required field-testing.

3. A minimum of five years' experience in the testing of trackwork isolation of similar type and equal complexity as the system specified and indicated.

4. Testing shall be performed by personnel with at least five years of employment experience with testing trackwork isolation systems.

5. All equipment to be used for quality assurance testing shall bear current calibration stickers. Current calibration certificates shall be submitted for all equipment to be used for this testing.

PART 2 - PRODUCTS (NOT USED)

PART 3 - EXECUTION

3.01 CONTRACT HOLD POINTS

A. Install a test section of not more than 2,000 feet of trackwork. Subsequent to the installation of the test section and prior to connection to existing trackwork, the Contractor's Testing Agency shall perform track-to-earth and rail-to-rail resistance testing to ensure that the criteria set forth in Article 3.02, herein, are met. The Contractor shall replace or repair any trackwork found to be deficient at no additional expense to Sound Transit. Do not construct any additional track construction until the test section is accepted by the Contractor's Quality Manager and by Sound Transit to meet the established criteria.

B. Submit weekly schedule updates indicating the track that has been installed to date and the trackwork scheduled to be installed during the upcoming week such that a testing schedule can be established by the Contractor.

C. It is the Contractor's responsibility to clean all sections scheduled for testing of all dirt, debris, and water prior to each scheduled test. Cost of cleaning and retesting any test section found to be in unacceptable condition shall be borne by the Contractor.

3.02 TEST PROCEDURE

A. Track-to-earth and rail-to-rail resistance testing shall be performed by the Contractor. The Contractor has the option to utilize the test procedure set forth below should the Contractor choose to perform preliminary track-to-earth resistance proof-testing prior to the quality control testing. The following general test procedure are to be followed by the Contractor:

1. Take a sufficient number of readings to ensure that human error in reading the instruments and transient disturbances in the electrical network have negligible influence on the final results.

2. Obtain a minimum of three (3) measurements for each data type test.

3. Record time at which each reading is obtained.

4. Examine data at time of test to ascertain that removal of either the highest or lowest value will not alter the arithmetic average of the group by more than 5 percent. If the average will be altered by more than 5 percent, obtain additional sets of data and combine results with first set. If the average of the combined data will still be altered by more than 5 percent by removal of the highest or lowest value, an unstable condition might exist. Advise the Contractor's Quality Manager and the Resident Engineer of unstable data conditions.

5. Perform incremental track-to-earth resistance and rail-to-rail resistance tests as soon as all major construction work is completed for that track increment. Do not defer testing to consolidate the testing effort.

6. Perform track-to-earth resistance and rail-to-rail resistance tests for all trackwork, including special trackwork areas, after track installation is completed.

7. Prior to each test, visually examine trackwork to ensure that there is no debris, water, dirt, ballast or other conductive material in electrical contact with the track. Record the condition of the track section to be tested on the data sheet.

B. Electrical Test Procedures:

1. The purpose of this Article is to identify minimum electrical test requirements for track-to-earth and rail-to-rail resistance measurements. Conduct tests in accordance with the approved test plan.

2. Rail Insulating Joint Test. Test each rail insulating joint for effectiveness prior to the connection of impedance bonds by both of the following test methods:

   a. Measure the resistance between each side of the insulating joint and the joint bar and measure the resistance across the insulating joint.

   b. Measure the voltage shift of the rail to earth on both sides of the insulating joint while applying a test current to one side of the insulating joint during track-to-earth resistance testing. Measure the voltage shift across the insulating joint as well.

   c. Repair and retesting of any deficiencies are at the Contractor's expense.

   d. Document all measurements and submit in accordance with approved test plan.

3. Track-to-Earth Resistance Test. Conduct track-to-earth resistance testing for all trackwork constructed for this project. Two test methods can be utilized for this contract to obtain the required track-to-earth resistance depending on the trackwork configuration encountered during the test period. Test sections of trackwork in maximum increments of 2,000 track feet:

   a. Track-to-earth resistance Test Method 1 pertains to electrically separated sections of trackwork. Conduct this test in accordance with ASTM G165.

   b. Track-to-earth resistance Test Method 2 pertains to electrically interconnected sections of trackwork. Conduct this testing in accordance with ASTM G165 for equipment and measurement requirements and with the following:

      1) Establish a current circuit (I1) between the track system and a low resistant earth contact and a track-to-earth voltage measuring

circuit (Vg1) using a low resistance earth contact. Do not use the same earth contact for voltage circuit and the current circuit.

2) With the current circuit (I1) closed, reduce the meter ranges of both circuits until the lowest readable scales are reached. Read and record the "on" values for current and voltage.

3) Open the current circuit (I1) and immediately read and record the "off" values for current and voltage. Repeat a minimum of three (3) times for accuracy.

4) Calculate the effective track-to-earth resistance by dividing the summation of change in voltage ΣΔVg1, by the summation of change in current, ΣΔI1:

$$Rvg1\text{-}1 = \Sigma\Delta Vg1/\Sigma\Delta I1 \text{ (volt/ampere)}$$

This resistance value represents the apparent resistance of the track section under test in parallel with the adjacent track sections. Usually the composite resistance to earth of the adjacent track sections will be lower than that of the test section because of the greater amount of trackage involved.

5) Obtain additional track-to-earth couplings at other locations as required.

$$Rvg2\text{-}1 = \Sigma\Delta Vg2/\Sigma\Delta I1 = \text{volt/ampere}$$

$$Rvg3\text{-}1 = \Sigma\Delta Vg3/\Sigma\Delta I1 = \text{volt/ampere}$$

6) Maintaining the current circuit (I1), measure the percentage of change in current flow on each rail each end of the test section using a maximum of 50 feet of rail as a current measuring shunt. Calculate the percentage of current flow as follows:

$$\%IA\text{-}1 = (\Sigma\Delta EA \times KR \times 100)/\Sigma\Delta I1$$

Where:

%IA-1 = percentage of I1 at location "A"

ΣΔEA = summation of change in EA caused by I1, for the total number of readings taken (millivolts).

ΣΔI1 = summation of change in I1 for the total number of readings taken (amperes)

KR = conversion factor for the millivolt shunt circuit (amperes/millivolt)

$$KR = 1/(L \times RR \times 1000 \text{ mv/v})$$

L = length of rail used for the millivolt shunt circuit (feet)

RR = longitudinal resistance of running rail per 1 foot length (ohms/foot)

Note: Using theoretical resistance values of 8.68×10^{-6} ohm/foot for 115 lb. rail and 8.32×10^{-6} ohm/foot for 120

lb. rail, theoretical KR values, for a 50 foot span of single rail are:

KR = 2.30 amperes/millivolt (115 lb. rail)

KR = 2.40 amperes/millivolt (120 lb. rail)

A sufficient sampling of actual longitudinal resistance factors shall be measured to establish a statistical mean value for KR used in the preceding calculations.

7) Obtain current flow percentages at the locations specified. Calculate the following:

%IB-1 = (ΣΔEB x KR x 100)/ΣΔI1

%IC-1 = (ΣΔEC x KR x 100)/ΣΔI1

%ID-1 = (ΣΔED x KR x 100)/ΣΔI1

%IE-1 = (ΣΔEE x KR x 100)/ΣΔI1

%IF-1 = (ΣΔEF x KR x 100)/ΣΔI1

%IG-1 = (ΣΔEG x KR x 100)/ ΣΔI1

%IH-1 = ΣΔEH x KR x 100)/ΣΔI1 and

%IS-1 = %IA-1 + %IB-1 + %IC-1 + %ID-1

%IR-1 = %IE-1 + %IF-1 + %IG-1 + %IH-1

A significant difference between the values obtained for %IA-1 through %ID-1 and/or between the values obtained for %IE-1 through %IH-1 may indicate that the electrical conductance-to-earth is not uniform over the entire track section being evaluated.

8) Calculate the average resistance-to-earth of the test section:

RAVG = (RVg1-1 + RVg2-1 + RVg3-1)/3(%IS-1 - %IR-1)

Where:

%IS-1 and %IR-1 shall be expressed as decimals

9) Calculate the average track-to-earth resistance for the test section on a 1000 foot of track basis (2 rails).

RT = RAVG x L x 2 = ohms-1000-feet of track (2 rails)

Where:

L = Length of track in multiples of 1000 feet

C. Minimum Acceptable Resistance Values:

1. Trackwork (All locations/types):

a. Mainline Ballasted Track-To-Earth Resistance Values: Minimum 500 ohms per 1,000 feet of single track (two rails).

b. Mainline Direct Fixation Track-To-Earth Resistance Values: Minimum 500 ohms per 1,000 feet of single track (two rails).

c. Mainline Embedded Track-To-Earth Resistance Values: Minimum 200 ohms per 1,000 feet of single track (two rails).

d. Yard Track-To-Earth Resistance Values: Minimum 75 ohms per 1,000 feet of single track (two rails).

e. Mainline Rail-To-Rail Resistance Values: Minimum 200 ohms per 1,000 feet of single track (two rails).

2. If the test results show that a section of trackwork fails to meet the acceptance criteria, check all instrumentation setups; verify that the equipment is operating properly; inspect the section under test for installation deficiencies, and correct the problems detected. Repair trackwork and repeat tests until the resistance values meet the acceptance criteria. Failed sections shall be clearly marked with grease pencil or rail crayon. Perform remedial work and subsequent testing at no cost to Sound Transit.

3. If test results indicate a failure to meet acceptance criteria, notify the Contractor's Quality Manager and the Resident Engineer within two (2) days of the completion of the test.

D. Final Acceptance Testing:

1. Notify the Contractor's Quality Manager and Resident Engineer when the trackwork is ready for final acceptance Testing.

END OF SECTION

SECTION 27 11 16

COMMUNICATIONS HOUSES, CABINETS AND RACKS

PART 1 - GENERAL

1.01 SUMMARY

A. Section includes:

1. Requirements for procurement and installation of UPS house, communications houses, cabinets and racks.

1.02 REFERENCES

A. This Section incorporates by reference the latest revisions of the following documents:

1. American National Standards Institute (ANSI):

a. ANSI T1.329 Network Equipment – Earthquake Resistance.

b. ANSI/J-STD-607-A Grounding Standard.

c. ANSI 61-Gray Paint – Resistance to corrosion.

2. ASTM International (ASTM):

a. ASTM-E-84 Standard Test method for Surface Burning Characteristics of Building Materials.

b. ASTM A570 Standard Specification for Structural Steel.

3. Institute of Electrical and Electronics Engineers (IEEE):

a. IEEE-81 Grounding Fall of Potential Measurement.

4. Military Standard (MIL STD):

a. MIL Std. 285 Attenuation Measurements for Enclosures.

5. National Fire Protection Association (NFPA):

a. NFPA 70 National Electrical Code (NEC).

b. NFPA 130 Standard for Fixed Guideway Transit & Passenger Rail Systems.

6. National Electrical Manufacturers Association (NEMA):

a. NEMA Enclosure Type:

7. Telcordia:

a. GR-63-CORE NEBS Requirements: Physical Protection for Fiber Distributing Frames.

8. ANSI/NECA/BICSI 607-2011 Standard for Telecommunications Bonding and Grounding Planning and installation Methods for Commercial Buildings.

9. BICSI Telecommunications Distribution Methods Manual (TDMM) Standard.

10. Electronic Industries Association (EIA):

a. EIA-310 Equipment Rack Hole Spacing.

1.03 SUBMITTALS

A. Submit:

1. Drawings:

a. A preliminary comprehensive drawing list of all Communications houses, cabinets, and rack drawings to be created for this Contract. As a minimum, the drawing list shall be submittal with the preliminary, final and as-built submittals, and any other major Communications houses, cabinets and racks submittal.

b. The initial drawing list shall contain all anticipated Communications houses, cabinets, and racks drawings that will be created as part of this Contract. Standard manufacturer drawings that are generally provided with the product or subsystem need not be included in the drawing list, even though they will be submitted for Sound Transit approval.

c. Numbering of the Communications houses, cabinets, and racks drawings shall generally follow Sound Transit's Light Rail Equipment and Facilities Numbering Plan and must be submitted for Resident Engineer's approval.

d. Each subsequent submittal after the preliminary design shall refine and update the drawing list.

e. The final as-built drawing list shall contain all Communications houses, cabinets, and rack drawings created specifically for this Contract.

f. Naming and numbering of devices shall follow Sound Transit's latest Light Rail Equipment and Facilities Numbering Plan and shall be submitted for Resident Engineer''s approval.

g. The Contractor shall provide layout drawings based on actual equipment and racks used that best facilitates installation and maintenance access.

h. Contractor's design shall take this into consideration the constrained spaces when designing the houses, cabinets or racks and determining height and clearances.

i. Drawings shall include equipment elevation and clearances, equipment layouts, and references to drawings showing power distribution. Report shall include heat load calculations, including heat loading from sun if rack/cabinet is installed outdoors.

2. Product Data:

a. Houses and cabinet products specification sheets for houses, cabinets and racks manufacturer.

b. Provide report how the cabinet or rack ambient temperature will be maintained to match that of the equipment installed within them. Report shall include equipment heat loads, including heat load from direct sun if rack/cabinet is located outdoors.

3. Shop Drawings:

a. Detailed arrangement plans of equipment in each house, cabinet and rack prior to rack assembly.

b. House, room and cross passage layout installation drawings showing equipment rack and cabinet locations. These drawings shall be to scale.

c. For all cabinets where Contractor provided equipment will be installed, conduit entry and routing drawings, including equipment installation and interconnection elevation details: Submit design of cabling methods suitable for mounting in Contractor provided cabinets or racks.

d. Drawings showing method of power grounding conduit and cabling.

e. Drawings and documentation indicating proposed method of mounting each piece of communications equipment component to cabinet and equipment rack, including any relocation plans of existing equipment where required.

4. Seismic conformance report for all Contractor-provided houses, racks and cases.

5. For pre-fab buildings, the drawings and calculations shall be sealed by Washington State licensed professional engineer and shall also conform to Sound Transit Design Requirements Set 720, Building Structures.

6. Spare Parts:

a. The Contractor shall furnish and deliver the following spare parts to Sound Transit:

1) One set of each type of rack, complete with installation hardware.

2) One set of each type of distribution cabinet, complete with installation hardware

7. Qualifications:

a. Licensed Engineer.

8. Certification Reports:

a. Zone 3 Compliance to Bellcore GR-63-CORE for Network Equipment Building Systems (NEBS).

1.04 QUALITY ASSURANCE

A. All racks installed in Communications rooms or houses shall be installed to meet Zone 3 compliance to Bellcore GR-63-CORE for Network Equipment Building Systems (NEBS). This shall be confirmed and submitted for all products either via cut sheets or in the form of a certification report from a licensed engineer.

PART 2 - PRODUCTS

2.01 COMMUNICATION HOUSES AND UPS HOUSES

A. Design doors to provide a dust proof and weatherproof seal.

B. Cover the entire floor with textured non-skid rubber matting.

C. Provide fluorescent lighting above the aisles to provide illumination to both sides of the equipment racks, wall shelves, and the local control panel area.

D. Environmental Controls:

1. Provide environmental controls including air conditioning and ventilation to maintain a temperature between 60 and 78 degrees F under normal operating conditions. Assume minimum exterior temperature of 15 degrees and maximum exterior temperature to be 98 degrees F.

2. Air filtration: MERV 9 filters minimum.

3. Ensure air conditioner drains to the exterior of the house. Interlock thermostat controls such that heating and air conditioning cannot both be on.

4. Provide dry contacts to monitor temperature by SCADA BMS.

E. Fire Detection System:

1. Thermal fire detector: Provide two thermal fire detectors with fixed temperature and rate-of-rise capabilities in accordance with UL 521.

2. Ionization Detector:

a. Provide two ionization detectors activated by products of combustion.

b. Sensitivity: adjustable with minimum level required by UL, unaffected by rapid changes of humidity.

c. Type: UL listed, multiple use, plug-in units containing two chambers with no moving parts, and contain no material requiring licensing by the Atomic Energy Commission for this application.

d. Detector base: screw terminals, neon indicator, standard base to accommodate a thermal rate-of-rise detector without additional wiring.

3. Manual pull station: single action, in accordance with UL 38, convenient and easily accessible, activates audible and visual indicating devices.

4. Provide dry contacts for monitoring by SCADA BMS.

F. Intrusion Detection: detect opening of a door, sound an audible warning and have a dry contact for monitoring by SCADA BMS.

G. Provide keypad near front door to disable alarm an adjustable time prior to alarm sounding. Intrusion detection system shall be fed by a separate power panel breaker and have enclosed battery backup.

H. Combined fire/intrusion detector with keypad, horn battery box, four wire ionization detector and thermal detector may be used.

I. Incoming AC Components:

1. Extend conduit from disconnect to the communication or UPS house main panel board.

2. Main panel board: main disconnect circuit breaker, protects complete house load.

3. Provide surge protection for the power entrance to the house.

J. Panelboards and Circuit Breakers: Coordinate with Electrical System Designer.

K. Transformers: Coordinate with Electrical System Designer

L. Grounding Bus: Nickel plated hard drawn pure copper grounding bus, with a minimum dimension of eight inches by eight inches by 1/2 inch thick. Drill and tap a minimum of twelve 3/8 inch holes and install twelve 3/8 inch by 1/2 inch long hex head nickel plated bronze studs with one washer.

M. TMGB – Telecommunications main grounding busbar shall be 6mm (0.25 in) by 100mm (4 in) wide by a length that is determined by the number of connections plus 25 percent spare that will be required to be made to the busbar (see ANSI/J-STD-607-A). The busbar shall be predrilled copper busbar provided with holes for use with standard size 2-hole lugs and be listed by a nationally recognized testing laboratory (NRTL). The TMGB shall be insulated from its support attachment a minimum of 50mm (2 in)

N. TGB – Telecommunications grounding busbar shall be 6mm (0.25 in) by 50mm (2 in) wide by a length that is determined by the number of connections plus 25 percent spare that will be required to be made to the busbar (see ANSI/J-STD-607-A). The busbar shall be predrilled copper busbar provided with holes for use with standard size 2-hole lugs and be listed by a nationally recognized testing laboratory (NRTL). The TGB shall be insulated from its support attachment a minimum of 50mm (2 in)

O. Internal Ground Wire: Insulated No. 6 AWG stranded internal ground wire with green insulation.

P. Ground Rods: Copper-clad steel ground rods of the non-rusting type, as manufactured by the Copperweld Corporation, or approved equal, at least eight feet in length and at least 5/8 inch in diameter. Exothermically weld ground rod connection to ground rod, Cadweld type GR or GT, or approved equal.

2.02 COMMUNICATION ROOM AND BUNGALOW EQUIPMENT RACKS

A. General:

1. All racks shall be provided and installed so that they are rated for Zone 3 compliance to Bellcore GR-63-CORE for Network Equipment Building Systems (NEBS).

2. Incorporate ventilation fans and louvers into cabinets to maintain cabinet ambient internal temperature within limits of installed equipment. If this can not be implemented via ventilation, all equipment in racks shall have extended operating temperature range of at-least -10 to +140 degrees F.

3. Size: Sized for standard 19-inch equipment widths. The Contractor shall consider the constrained spaces in the communications bungalow and rooms and its design shall accommodate these spaces. Such accommodations may include taller racks, swing racks, pull out shelves or other means to mount equipment and meet required clearances.

4. Frame: Welded steel.

5. Rack Framework: 11 gauge ASTM A570 steel.

6. Paint: ANSI 61 gray and resistant to corrosion.

7. Mounting Rails: Standard EIA-310 hole pattern with pre-tapped holes.

8. Mounting Equipment:

   a. Expansion Anchors: In accordance with Specifications 03 15 25, Anchorage to Concrete.

      Braced to enable a seismic Zone 3 rating.

9. Spare Capacity: A minimum of 25 percent spare space shall be designed for each rack.

10. Spare Racks: A minimum of two spare racks shall be provided in each communications room or bungalow, complete with electrical connection, grounding and power distribution unit (PDU). Assume 7KW of equipment load for each rack.

B. Server Racks:

1. Shall be Chatsworth Products (CPI) Seismic-Frame© cabinet series, or approved equal.

2. Nineteen inches EIA-310-E compliant.

3. Four pole, with adjustable position vertical rails.

4. Paneling: Enclosed with side panels.

5. Design racks to accept 120 VAC single phase service.

6. Power Distribution Unit (PDU): A pair of PDU shall be provided for each rack, sourced by independent 20-Amp electrical circuit with monitoring and control capability via Network. Model AP8863 by APC, or approved equal.

2.03 COMMUNICATION DISTRIBUTION CABINETS

A. Cabinet Enclosure Requirements:

1. Dimesions: As indicated on the contract drawings. The Contractor shall consider the constrained spaces in the distribution cabinets and its design shall accommodate these spaces. Such accommodations may include, swing racks, pull out shelves or other means to mount equipment and meet required clearances. Full access to all Contractor provided equipment shall be provided.

2. Cabinet Enclosure: for indoor in accordance with NEMA 4 and for outdoor in accordance with NEMA 4X standard.

3. Cabinet shall be 14 gauge steel, seams continuously welded and ground smooth; no holes or knockouts.

4. Cabinet shall contain a minimum 33 rack unit frame and accept standard 19-inch rack–mountable equipment.

5. If the Contractor's design require a swing frame to accommodate the tight spaces it shall:

    a. Be within the cabinet and shall be capable of swinging a minimum of 90 degrees, to provide access to the rear of equipment mounted on the frame.

    b. The swing frame shall pivot within enclosure, from the right or left-hand side, as determined based on field conditions, and shall have a swing stop.

    c. Rack mount holes are tapped with #10-32 threads spaced per EIA-310standard.

    d. The swing frame shall use a two-point locking rod system with double bit insert and an alignment mechanism, with a handle to pull out the frame.

    e. The swing frame load capacity shall support installed equipment without affecting frame structural integrity (bending or flexing), or frame movement.

    f. The frame shall allow for maximum use of the internal cabinet space.

6. In addition to required communication equipment, the cabinet enclosure shall be supplied with the following items:

    a. Ground busbars.

    b. Door activated interior light.

    c. Door switch for operation of lighting.

    d. Intrusion alarm door switch.

    e. Drawing pocket.

    f. Grounding straps from door to cabinet and swing rack to cabinet.

    g. Mounting brackets for DIN rails.

    h. Equipment shelves, mounting panels, brackets, and supports.

    i. Wire management guide brackets.

    j. Supervised power outlet strips.

    k. Terminal strips and patch panels.

    l. 120 VAC utility receptacle outlet.

7. Ventilation: Incorporate ventilation fans and louvers into cabinet to maintain ambient internal temperature within limits of installed equipment.

8. Cabinet shall be mounted on a steel pedestal frame.

9. Front and rear of all equipment must be accessible.

10. Pedestal mounting frame shall be per cabinet manufacture approval. Provide all hardware required to furnish a complete, stabilized cabinet, including any bolt-down hardware to limit tipping of the cabinet during operation and servicing.

11. Cabinet mounting and mounting hardware shall be earthquake zone 3 rating compliant.

12. Combustion: In accordance with NFPA 130 Section 5.4.2.

13. Flame Spread Rating: In accordance with ASTM E-84 Class 1.

14. Color: ANSI 61 Gray, Smooth; Interior, exterior.

B. Cabinet Door:

1. Equip doors with a device that restrains the doors in the open position.

2. Door in closed position shall not interfere with any installed equipment, wiring, or rack frame.

3. Equip doors with forced entry resistant doors with a three-point lock.

4. Locks: Door handle shall accept a padlock. Locks shall be keyed alike.

5. Seal locking device to prevent water intrusion into cabinet.

6. Provide five master keys.

C. Cabinet Enclosure Requirements (Fire Command Center Rooms Only):

1. Cabinet shall have removable side panels to allow access for equipment maintenance.

2. Cabinet shall have rack mounting rails, sized for standard 19-inch equipment widths. Standard EIA-310 hole pattern with pre-tapped holes with #10-32 threads.

3. Frame: Welded steel.

4. Paint: ANSI 61 gray and resistant to corrosion.

5. Ventilation: Louvered top panel and fan to provide air flow of 400 CFM minimum.

6. Doors: Hinged, swing open, and removable doors.

2.04 VIBRATION CONTROL CABINET

A. Hoffman Concept Series or approved equal.

B. Overall Size and Layout: In accordance with the Issued for Construction Drawings.

C. Design equipment to meet space provided.

D. Mounting holes in back of body for external wall-mount brackets.

E. Color: ANSI 61 Gray, Smooth; Interior, exterior.

F. Hardware Kit with rear panel mounting nuts, panel grounding hardware, and sealing washers.

G. Conduit entry shall be via top or bottom of enclosure.

2.05 INTERFACE TERMINAL CABINET

A. Cabinet shall be wall mounted rated NEMA 4. Cabinet shall be Hoffman Concept Series or approved equal.

B. Overall Size and Layout: In accordance with Issued for Construction Drawings.

C. Design equipment to meet space provided.

D. Construction: 14 gauge welded steel. Seams welded and ground smooth.

E. Doors: Corner formed, interchangeable, removable via clip-style hinge pins.

F. Door Latches: Quarter-Turn slotted.

G. Provide Mounting holes in back of body for external wall-mount brackets.

H. Color: ANSI 61 Gray or approved equal, Smooth; Interior, exterior.

I. Provide Hardware Kit with rear panel mounting nuts, panel grounding hardware, and sealing washers.

J. Conduit entry shall be via top or bottom of enclosure.

2.06 TPSS DISTRIBUTION CABINET

A. Coordinate with the TPSS subset to provide a distribution cabinet attached on TPSS to accommodate communications devices. The communication devices listed below shall be accommodated in the TPSS attached cabinet and it shall be possible for a maintainer to have maintenance access via a lockable door to the cabinet:

1. Ethernet switch.

2. Lenel door controller.

3. Panel and breakers to accommodate TPSS and wayside communication devices powered from the TPSS power source.

4. Protected entrance terminals for all copper cabling terminated from outside of the TPSS attached distribution cabinet.

5. Isolation transformer for wayside communication devices powered from the TPSS power source.

2.07 TRAIN CONTROL/SIGNALS BUNGALOW COMMUNICATION RACK

A. Coordinate with the train control subset to provide a rack in the train control subset drawings to accommodate communication devices. The below communication devices shall be accommodated in the train control rack:

1. Ethernet switch (provided by Sound Transit. Contractor shall provide requirements to Sound Transit for port count and configuration).

2. Panel and breakers to accommodate train control bungalow and wayside communication devices powered from the train control bungalow source.

3. Protected entrance terminals for all copper cabling terminated from outside of the train control bungalow.

4. Isolation transformer for wayside communication devices powered from the train control bungalow.

5. Radio bi-directional amplifier: as shown in the Issued for Construction Drawings.

2.08 GROUNDING – EQUIPMENT CABINETS AND RACKS

A. Communications Grounding shall follow “Communications Typical Station Cabinet/Rack Grounding System” drawing.

B. Grounds shall not exceed 5 ohms as measured by IEEE-81 Fall of Potential at the room ground busbar provided in the communication facility.

C. Per NECA/BICSI 607, the maximum value for resistance between any point in the telecommunications bonding and grounding system and the building’s electrical grounding electrode system shall be 100 milliohms.

D. Any electrical ground impedance value larger than 5Ω will require the approval of the Resident Engineer.

E. Provide two ground busbars, one for chassis and one for equipment ground.

F. Provide maximum ground protection from Radio Frequency Interference (RFI) and Electromagnetic Interference (EMI).

G. Testing for current on the Safety Ground of any end device shall not exceed 3.5ma per ITE Standard UL/CSA 60950-1_2007. Exceeding 3.5ma of current is a failure of the test.

PART 3 - EXECUTION

3.01 RACK/CABINET ENCLOSURE INSTALLATION

A. Rack /Cabinet Enclosure Installation:

1. Provide equipment racks or cabinets for communications systems at locations as indicated on the Contract Drawings.

2. Provide clearance on the front, back and sides of equipment racks or cabinets per BICSI TDMM, NFPA 70 (NEC) and local codes

3. Provide shelves, brackets, fans, horizontal and vertical cable management, ground busbars, power strips, rack screws, leveling casters, machine screws and other accessories as required for a functional installation.

4. In Communications Rooms, Bungalows and Closets, electrically isolate racks from one another and from cable tray. See “Communications Typical Station Cabinet/Rack Grounding System” diagram.

5. Prior to installation, survey sites to ensure submitted drawings accurately represent the current field condition. Make modifications to drawings to reflect actual field conditions based on survey results.

6. Install each cabinet level, plumb, and grounded per “Communications Typical Station Cabinet/Rack Grounding System diagram. Cabinets to be mounted material to isolate it from the floor.

7. Install wall mounted cabinets minimum 30 inches above finished floor.

8. Rack and cabinet power installations: In accordance with NFPA 70 (NEC) and local codes.

9. Ground racks and cabinets to appropriate ground system. No ground loops shall be permitted. Grounding conductor shall be in accordance with NFPA 70 (NEC), ANSI/NECA/BICSI 607-2011 and local codes.

10. Equipment rack interface with floor:

    a. Raise equipment racks off floor with Insolated I-beams.

    b. Installation Seismic Rating: Seismic Zone 3, refer to Requirements Set 701, GeoTechnical for seismic zoning.

    c. Mitigate effects of vibration conditions caused by operation of adjacent systems.

    d. Firmly affix equipment in racks and cabinets to prevent damage due to vibration.

3.02 RACK/CABINET MOUNTED EQUIPMENT INSTALLATION

A. Rack mount equipment in the communication room or bungalow equipment rack or cabinet. Design mounting methods for any equipment that is not normally rack mounted.

B. Provision shall be provided to allow ease of access to front and rear of equipment.

C. Equipment shall be mounted to maximize air-flow inside cabinet.

D. Equipment shall be mounted to minimize vibration effects on equipment.

E. Equipment shall be mounted to maximize contiguous free rack space for future use.

F. Equipment and associated wires (data, power, and ground) shall be installed to allow for ease of cabinet opening, swing frame opening, and pull-out and pivot of frames. Maintenance access to front and rear of cabinet shall not, in any way, be obstructed by wiring of equipment.

G. Cables installed within cabinet shall be of sufficient length so that any swing frame or pull-out and pivot frame within cabinet can be swung out to its maximum extent without damaging any cable or straining any connector.

H. Wrap cables in bundles within cabinet in an orderly manner per functional type; arrange bundles so that cables are not damaged by the movement of any swing frame or opening/closing of any panels. Ensure wrap does not crimp cables. Bundle fiber patch cords only with Velcro type wraps.

I. Cable installation shall not exceed maximum bend radius per cable manufacture.

J. Wires shall be installed based on approved installation plans.

K. Rack mounted equipment shall be grounded to rack/cabinet internal ground busbar.

L. Wires, patch cords etc., shall be installed and dressed in a manner as to prevent accidental misconnection from equipment during routine maintenance.

3.03 CLEANING

A. Clean interior of boxes to remove dust, debris, and other material.

B. Clean exposed surfaces.

END OF SECTION

SECTION 27 13 23

SYSTEMS OPTICAL FIBER CABLING

PART 1 - GENERAL

1.01 SUMMARY

A. Section includes:

1. Requirements for design, procurement, installation, termination, testing, labeling, and documentation of systems fiber optic cables and ancillary equipment.

1.02 REFERENCES

A. ASTM International (ASTM):

1. ASTM E662-15a Standard Test Method for Specific Optical Density of Smoke Generated by Solid Material.

B. Institute of Electrical and Electronic Engineers (IEEE):

1. IEEE 383-2015 Vertical Flame Test, Standard for Qualifying Class 1E Electric Cables and Field Splices for Nuclear Power Generating Stations.

C. International Organization of Standardization (ISO):

1. ISO 9001 Standard Quality Management Systems.

D. National Fire Protection Association (NFPA):

1. NFPA 70 National Electrical Code (Chapters, Articles, and Sections that impact telecommunications installation).

2. NFPA 130 Standard for Fixed Guideway Transit and Passenger Rail Systems.

3. NFPA 262 Standard Method of Test for Flame Travel and Smoke of Wires and Cables for Use in Air-Handling Spaces.

E. Naval Engineering Standard (NES):

1. NES 711 Smoke.

2. NES 713 Toxicity.

F. Telecommunication Industry Association/Electronic Industries Alliance (TIA/EIA):

1. TIA/EIA 455-B Standard Test Procedure for Fiber Optic Fibers, Cables, Transducers, Sensors, Connecting and Terminating Devices, and Other Fiber Optic Components.

2. TIA/EIA 455-78 FTOP-78 Spectral-Attenuation Cutback Measurement for Single-Mode Optical Fibers.

3. TIA/EIA 455-124 Polarization-Mode Dispersion Measurement for Single-Mode Optical Fibers by Interferometry.

4. TIA/EIA 455-175B Measurement Methods and Test Procedures Chromatic Dispersion.

5. TIA/EIA 455-133 FOTP-133 IEC-60793-1-22 Optical Fibers Part 1-22: Measurement Methods and Test Procedures Length Measurement.

6. TIA/EIA 598 Fiber Optic Color Code.

7. TIA/EIA 568-B.1-2 Commercial Building Cabling for Telecommunications Products and Services.

8. TIA/EIA 526-7, A-B Measurement of Optical Power Loss of Installed Single-Mode Fiber Cable Plant.

9. TIA/EIA-569A Commercial Building Standard for Telecommunications Pathways and Spaces.

10. TIA/EIA 568-C Cabling and components standard.

11. TIA-758B-2012 Customer-Owned Outside Plant Telecommunications (OSP).

G. Telcordia:

1. GR-449-CORE Generic Requirements and Design Considerations for Fiber Distributing Frames.

2. GR-20-CORE Generic Requirements for Optical Fiber and Optical Cable Specifications.

H. Underwriters Laboratories (UL):

1. UL 224 Extruded Insulating Tubing.

2. UL 910 Test for Flame-Propagation and Smoke-Density Values for Electrical and Optical-Fiber Cables Used in Spaces Transporting Environmental Air.

3. UL 1666 Test for Flame Propagation Height of Electrical and Optical-Fiber Cables Installed Vertically in Shafts.

I. BICSI TDMM:

1. TDMM latest Edition – Telecommunications Distribution Methods Manual.

J. FOA:

1. Standards FOA1 Testing the Loss of a Fiber Optic Cable Plant and Standard FOA4 OTDR Testing a Fiber Optic Plant.

K. American National Standards Institute (ANSI):

1. ANSI/TIA-568-C.3 Optical Fiber Cabling Components.

1.03 SUBMITTALS

A. Submit design review submittals consisting of a complete design description, including detailed drawings, specifications, and submittals of all subsystems and elements within the subsystem. Each calculation, test procedure, final drawings, and submittal shall be reviewed, signed and sealed by a professional engineer. The final design document shall contain sufficient details for construction.

B. Submit:

1. Bill of Materials.

2. Site Survey Report:

a. Survey signal/communications ducts, manholes, and handholes to determine most suitable fiber cable installation method, based on field conditions and duct occupancy. Submit:

1) Assessment of suitability of duct bank, inner ducts, conduits, and general site conditions for the installation of cables and equipment.

2) Duct bank and inner duct occupancy drawings.

3) Duct plan drawings with distance indications.

4) Manhole and handhole location drawings will be submitted with numbering and labeling per the approved plan.

b. Survey existing equipment rooms and fiber distribution equipment installed by others. Submit:

1) Existing fiber distribution cabinet and rack layouts including feasibility for expansion.

2) Existing fiber optic backbone cables and bulkhead port utilization.

3) Spare capacity for existing fiber bulkhead ports and feasibility for expansion.

3. Design Document:

a. Design Review packages:

1) Submit Preliminary Design Review (PDR) package for Sound Transit Review. The package must include the following as a minimum:

a) Complete technical information for each type of cable to be used and its specific application in this Project.

b) Complete technical information including the product data on fiber optic splice cases, including splice enclosure/trays; and splicing and termination materials.

c) Fiber optic link loss budget calculations with estimated dB signal losses that take into consideration cable length, splice or termination and jumper connection losses.

2) Submit Final Design Review (FDR) package for Sound Transit Review. The package must include the following as a minimum:

a) Updated versions of the Preliminary Design submittal. Changes from the preliminary design submittal shall be clearly indicated and a narrative furnished describing the reason for the change.

b) The final design submittal shall include the complete design, final calculations; detailed product and component level parts list, drawings, phasing and interface details required for construction.

c) Updated product submittals for all, materials and components for which product submittals were not previously submitted and Engineer approved.

d) Complete Fiber Optic termination maps for each location where fiber optic cable strands are terminated and/or spliced.

b. Technical Data Sheets - Submit complete technical data sheets for the fiber cable and ancillary equipment proposed. Demonstrate compliance with mechanical and optical properties specified in this Section.

c. Manufacturer Experience - Submit information for each proposed manufacturer describing his experience in manufacturing fiber optical cable, splice equipment, and termination equipment for rapid transit and railroad applications and quality assurance program and warranty.

d. Contractor Experience - Submit information for each proposed fiber contractor describing his experience in installation and testing of fiber optical cable, splice equipment, and termination equipment for rapid transit and railroad applications and quality assurance program and warranty.

e. Fiber Cable System Plans and Drawings:

1) The initial drawing list shall contain all anticipated Optical Fiber Cabling System drawings that will be created as part of this Contract. Standard manufacturer drawings that are generally provided with the product or subsystem need not be included in the drawing list.

2) Numbering of the Optical Fiber Cabling System drawings shall follow Sound Transit's latest Light Rail Equipment and Facilities Numbering Plan

3) Each subsequent submittal after the preliminary design shall refine and update the drawing list.

4) The final as-built drawings shall contain all Optical Fiber Cabling System drawings created specifically for this Contract, and shall conform to the CAD standards, Codes, Regulation and General Accuracy

5) Naming and numbering of devices shall follow the latest Sound Transit's Light Rail Equipment and Facilities Numbering Plan. An Equipment and Facilities plan by the contractor shall be submitted and approved before any Fiber testing and installation can proceed.

6) Submit fiber cable system schematic, plan, and detail drawings, indicating complete fiber cable system, cable lengths, equipment placement within station and cross-passages. Include profiles showing location of cabinets/racks, rack elevation drawings, including all fiber termination details. Specify cable fiber cable labeling in accordance with Sound Transit existing standards.

f. Calculations - Submit calculations for each fiber optic cable span and fiber link loss budget calculations.

g. Material/Equipment/Assembly/Installation Details - Submittal shall include materials, equipment, assembly and installation required to carry out functions and purposes indicated in these Specifications, and to make the system suitable for the purpose for which it is intended, whether or not such materials, equipment, assembly and installation are specially indicated in the requirements of these Specifications.

h. Cable Interface Diagrams - Design submittal shall define fiber patch cable interfaces between systems. This includes communications, radio, signal, traction power, and 26 kV.

i. Termination and Splicing Instructions - Submit approved step by step termination, connector, and pigtail splicing instruction in accordance with manufacture supplied documentation for fiber optic equipment to be utilized as part of the fiber cable system.

4. Fiber Cable Installation/Pull Plan:

a. Submit Installation plan as outlined in this Section. Plan to include existing and new conduits selected for fiber installation to be mandrel / clean swabbed prior to use. This shall be completed early in the schedule to allow for corrections if needed.

5. Fiber Test Equipment:

a. Submit Manufacturer cut sheets and user documentation for fiber optic test equipment and test viewing software to be utilized as part Fiber optic installation and testing.

6. Testing Documents:

a. Submit a cable installation procedure and check-off list for approval prior to cable installation in accordance with TIA/EIA 568-C and TIA/EIA-569-C.

b. Submit information for each segment of cable to be installed.

c. Submit Test Program Plan, Test Procedures, and Test Results for each Test.

d. Factory Production Test: Submit Certified Test Report prior to shipment.

e. Pre-Installation Reel Test: Submit Fiber Cable Reel Test Report after shipment, but prior to Installation.

f. Fiber Cable Termination/Splicing Testing: Submit test results for individual pigtail splices in accordance with approved procedure.

g. Fiber Cable Field Tests: Submit end to end test results of OTDR and Power Meter tests in accordance with approved procedures.

7. Maintenance Plan:

a. Develop a maintenance plan that details preventative maintenance, outage repair, and administration procedures required for systems optical fiber equipment prior to acceptance.

b. List personnel, equipment, and duration required for each procedure developed. Include frequency necessary for preventative maintenance procedures.

8. Spare Parts:

a. Provide two spare fiber distribution panels as specified in this Section, fully equipped with splice trays, and splice sleeves to support 144 splices.

b. Provide spare LC bulkhead connectors, fiber distribution panels, LC-UPC (for analog radio fiber, it should be LC-APC) pigtail assemblies, splice trays, and splice sleeves compatible with the Fiber Distribution Panels as specified in this Section . Provide for a total of 72 spare fiber splice/terminations.

c. Provide spare fiber patch cords for Intra-FDP, FDP to FDP, and equipment to FDP connections as specified in this Section. Provide number patch cords equal to 3 percent of the total of traffic carrying patch cords installed per final acceptance of the network communications requirements. Patch cords lengths and connector types to be site specific per equipment requirements.

1.04 QUALITY ASSURANCE

A. Cable Manufacturer:

1. Wire and cable manufacturers, quoted products and installation vendors shall be approved by Resident Engineer. Provide qualification data and make arrangements for required demonstrations and tests.

2. Qualifications:

a. Past Performance and Experience: Cable manufacturers shall demonstrate previous successful experience in supplying wire and cable specified in this Section. Provide a list of three such installations of similar size and scope for each cable manufacturer to be considered.

b. Quality Assurance Program: Cable manufacturers, in accordance with requirements of these Specifications, are required to have in place or implement, an effective quality assurance program adhering to the requirements of ISO 9001 to ensure purchase control performance. Resident Engineer reserves the right to audit the manufacturer's facilities for conformance to the Contract including, but not limited to first article inspections, source inspections and on-site surveys. Prime concern shall be focused on formal assurance requirements to ensure manufacturer cannot attribute cable failure to actions or lack of actions.

c. Technical Data: Provide technical data that demonstrates compliance with the requirements of these Specifications for each cable type Contractor plans to supply (i.e. White Papers, Certifications).

d. Factory Design Tests: Make arrangements with prospective cable manufacturers to perform factory design tests as required by Resident Engineer.

e. Sample Specimens: If requested, furnish Resident Engineer sample specimens in 4 foot lengths identical to proposed cable including connectors and peripherals. Sample specimens shall remain property of Sound Transit.

f. Manufacturers shall certify compliance with the following warranty prior to selection:

1) Manufacturers warrant that design, material, and workmanship incorporated in each item of cable is of the highest grade and consistent with established, and generally accepted, standards for aerial and underground cable for transit applications; and that each such item and every part and component thereof shall comply with these Specifications.

2) Manufacturers agree this warranty shall commence with acceptance of each item of cable, whether defect be patent or latent, and shall continue for a period of 8 years after initial satisfactory operation of the item or 10 years after acceptance of item, whichever is shorter.

3. After Manufacture Selection:

a. Monitor manufacturers of cable to assure that approved Quality Assurance Program is being closely adhered to and that wire and cable are being manufactured in accordance with these Specifications and approved submittals.

b. Each finished cable shall be traceable to test date on file for each step in its manufacturing process.

4. Inspection and Certification Process:

a. Resident Engineer and Sound Transit systems engineers shall have the right to make such inspection and tests as necessary to determine if the cable meets requirements of these Specifications.

b. Resident Engineer and Sound Transit systems engineers shall have the right to reject cable that is defective in any respect.

c. Provide Resident Engineer 15 Days advance notice of date cable will be ready for final testing so that Sound Transit may witness the tests if elects to do so. With the notice, a copy of the specific test forms will be supplied with all the cable, test equipment, and fiber cable numbers/labeling, persons preforming the tests and relative test information on the forms.

d. Physical Tests: Perform physical random tests on samples selected at the place of production. Take each test sample from accessible end of different reels. Identify each reel selected with corresponding sample. Specify number and length of samples under individual tests. Perform tests for cable materials and cable construction specified.

e. Resident Engineer reserves the right to conduct any test to provide further satisfaction that cable is manufactured in accordance with requirements of these Specifications.

B. Qualified Fiber Installation and Test Personnel:

1. Fiber optic work required to be performed requires a contractor with specialized knowledge and training. Contractor shall be certified by an accredited training organization, and have been an approved contractor by the following Telco or fiber cable Providers:

a. BICSI (Building Industry Consulting Services Intl).

b. FOA (Fiber Optic Association).

c. AT&T, Verizon, or Sprint Approved Contractor with Tier 2 Certification.

d. Corning Cable Systems Trained.

2. Fiber optic cable contractor must be well trained, experienced and qualified to perform fiber optic cable splicing. To be considered for approval for fiber optic work, the installer/splicer shall be recommended by the fiber cable manufacturers, have had recent satisfactory experience in performing all aspects of fiber optic work, with a minimum of 15 years of field experience.

3. Fiber Contractor shall have verifiable experience in the following aspects of Fiber optic work:

a. Complete fiber optic splicing (fusion and/or mechanical).

b. Complete testing services, such as end to end, reel testing, and splice loss testing, ORL, power meter/laser source testing and fiber characterization testing (10GigE certification).

c. Connectorization and polishing, Fiber Panel Terminations & Custom cable assemblies.

d. Emergency restoration and in-service "hot cuts", Balloon-lateral splices.

e. Rodding & Duct proofing, inner-duct installation.

f. Installation within underground ducts/manhole environments, Certified in Confined Space Entry.

g. Place fiber cable -- all sizes.

h. Metro and Long-haul installs.

i. Experience working within active Transportation Right of ways-including constrained working hours.

4. If during any process involving fiber optic cable work the Resident Engineer determines the fiber installation/splice personnel are found to exceed the listed reasonable average time periods of work performance for a given task for no cause, and installation schedules are being affected, the Contractor shall be required to replace installer/splice personnel with more capable personnel that shall complete the installation and splicing work in the prescribed time period at no additional expense to Sound Transit.

1.05 DELIVERY, STORAGE, AND HANDLING

A. Packing, Handling, and storage:

1. Cables shall be properly packed, handled and stored according to the manufacturer’s specifications. ST shall receive proper documentation of the chain of custody of the material from the Resident Engineer and shall be reviewed by Sound Transit systems engineers.

B. Marking:

1. Mark each reel on outside flange with the following information:

a. Manufacturer's name.

b. Contract name and number.

c. Cable identification number.

d. Cable length.

e. Date of manufacture.

C. Delivery:

1. Inspect cables at time of delivery at construction site to assure no damage was done during shipping.

2. Inspect every reel for physical damage.

3. Submit to Resident Engineer cable reel inspection report.

4. Replace damaged or rejected cable promptly at no cost to Sound Transit.

D. Storage:

1. Store cables on solid surfaces designed to support cable reels which drain adequately and do not allow accumulation of liquids, oils, or chemicals.

2. Align and protect cable reels so as not to allow reel flanges to damage other reels.

3. Provide adequate aisles and barricades to allow accessibility and to prevent construction equipment from damaging cable reels.

4. Reseal cable ends promptly when a length is cut from reel.

E. Handling:

1. Handle cable reels using a sling and spreader attached to a shaft through the reel hubs, or by cradling both flanges between lift truck forks.

2. Do not lift reels by top reel flange or drop from any height.

3. Ensure lift truck forks do not touch cable surfaces on reel.

4. Roll reels in the direction opposite the cable wind on reel.

5. Do not lay reels flat.

PART 2 - PRODUCTS

2.01 FIBER OPTIC CABLE

A. The installation environment will include existing Link communications system facilities, underground and tunnel duct-banks, embedded and surface conduit, communications manholes and handholds, cross-passages, and station systems equipment rooms.

B. General:

1. Fibers shall be usable and meet required specifications.

2. The life expectancy of the cable shall be 25 years for service in a railroad and transit environment. Contractor shall submit warranty statement from the cable manufacturer.

3. The cable shall be designed for installation in underground conduit, wet or dry environments, including alternating wet and dry conditions.

4. Fillers: Solid polyethylene, or similar material, rods of same diameter as buffer tubes.

5. Identification:

a. Cable Print: White, indented into outer jacket.

b. Apply cable print to outer jacket with the following information:

c. Cable Manufacturer.

d. Number of Fibers.

e. Fiber Type, Single Mode Fiber (SMF).

f. LSZH.

g. Date Coded Month Year (MMYY).

h. Sequential Marking (a mark every foot or meter).

C. Application Descriptions:

1. Fiber count per Contract drawings.

2. General: Manufacture Draka DDLSZHC Heavy Duty Duct Cable, or approved equal.

3. Radio fiber – rating: Plenum rated, OFNP/OFN, CSA FT4; suitable for field connectorizing to UPC connectors (APC for analog system) for direct connection to radio equipment.

2.02 FIBER SPLICE CASE

A. Provide splice cases suitable for: underground manhole cable vaults, outside plant, uncontrolled environments or at building entry point when space permits. Splice cases shall be placed at locations as shown in the Issued for Construction Drawings.

B. For fiber splice case installed in pull boxes, Contractor shall be required to get pull box dimensions, material and installation method approved by the Resident Engineer prior to procurement and installation.

C. Approved Manufacturer: Preformed Line Products, 3M, Corning, or approved equal.

D. Uncontrolled Environment: Location in which temperature and humidity are not artificially regulated, where relative humidity can exceed 50 percent, or where liquid may come into contact with the fiber cable core.

E. Construction: Cylindrical design having two points of entry (one in each end of the cylinder) for at least four cables in each point. Splice cases shall be re-enterable and re-sealable to support fiber cable repair and or expansion.

F. Entry Points: Flexible compression type fitting having a single compression gasket between two type 304 stainless steel plates.

G. Environmental Requirements: Withstand submersion up to a depth of 10 feet for a period of 10 Days without leaking, withstand three repeat blows of 9000N without failure or leakage via submersion test.

H. Material: Corrosion resistant material equal to or superior in corrosion resistance to type 304 stainless.

I. Fill: Dry-type encapsulates to allow future re-entry and prevent water incursion, no gel type.

J. Size: Provide up to 288 single-fiber splices. Provide protection, and storage room for unspliced fiber buffer tubes pass through. Support Ring Cut, loop-through splicing.

K. Supply splice case mounting hardware such that case may be secured to installation location and that cables have sufficient strain relief to prevent damage under frequent movement and harsh conditions.

2.03 FIBER DISTRIBUTION PANEL - RACK MOUNT

A. Utilize Fiber Distribution Panel (FDP) for termination, storage and distribution of the fiber optic cable system, and provide a convenient point for splicing outside plant fiber optic cables to pigtails. FDPs shall be a complete system of components by a single manufacture.

B. FDP shall comply with Telcordia GR-449-CORE.

C. Provide FDPs capable of terminating 12, 24, 36, 48, or 144 fibers strands, as shown in the Issued for Construction Drawings. Final FDP port quantities in accordance with final design of fiber cable termination requirements.

D. Size: Chassis (width: 17.4 inch) x (depth: 12.0 inch) x (height: min. 1.75 inch, max. per FDP port quantities). Housing shall be rack mountable per EIA-310, in either 19 inch or 23 inch wide rack rail spacing.

E. Furnished fully loaded FDP complete with Lucent Connector (LC) bulkheads, pigtails: LC Ultra Polish Connector (UPC) pre-connectorized to 900µm jacket, color coded per TIA/EIA-598, heat shrink fusion splice trays, a splice drawer, cable rubber clamps, and FDP front cover. FDPs provided for a particular room shall be consistent with that provided by Civil contracts for that location.

F. FDP shall incorporate labeling provisions that correspond to each fiber port location. Labeling shall be viewable from front of FDP.

G. All connectors and accessory items to be compatible with new and existing optical fiber transmission equipment.

H. Outside plant cables shall be routed to the fiber panels and secured to the outside of the chassis, FDP shall provide for tie point for securing fiber cable central member.

I. Route each optical fiber into the chassis and splice tray for splicing into a pigtail assembly.

J. Sharp edges in areas where fiber may be damaged in/out of FDP is prohibited. Cable entrances shall have grommet and cable clamp strain relief.

K. Completed splices shall be mounted in splice trays for protection. Splice trays shall be capable of securely holding up to 24 individual fusion splices.

L. Splice trays, pigtails and optical fiber buffer tubes shall be stored at the bottom of the FDP in extendable splice draws. The FDP shall be furnished with Cable Management Trays (CMT) where fiber bulkhead plates are mounted, trays shall be swing out design for access to front and rear of fiber bulkhead terminals.

M. Each CMT shall store at least 8-10 meters of fiber optic pigtails, patch cords or a combination thereof.

N. Bend radii inside the CMT shall be greater than 2 inches.

O. The FDP shall protect the fiber throughout the panel.

P. Provide protective dust caps for all fiber ports.

Q. Accessibility for Fiber Splice Trays, Cable Management Tray, and Fiber Ports shall be from the front. Rear panel shall be removable.

2.04 FIBER DISTRIBUTION PANEL (FDP)-WALL MOUNT

A. Provide Two Door wall mount chassis fiber cable termination/splice box.

B. Terminations: Provide fully loaded 48 terminations with 8 required bulkhead plates, 6 ports per plate.

C. Bulkhead Plates: 6 Ports with SC bulkhead adaptors and 6 SM SC/UPC 900µm color coded per TIA/EIA-598-connectors/pigtails.

D. FDP shall incorporate labeling provisions that correspond to each fiber port location. Labeling shall be viewable from front of FDP.

E. Provide required splice trays for complete installation of 48 terminations.

F. Provide cable clamps, compression fittings, and strength member tie-off to support the number of fiber cables that will be terminated in the FDP.

2.05 OPTICAL FIBER PIGTAILS, PATCH CORDS, AND CONNECTORS

A. FDP Fiber Pigtails:

1. Single-Mode Pigtails with LC connector at one end and the other bare jacketed fiber.

2. Pigtail Connectors: Telcordia 326 compliant ‘LC’ UPC type. Colored blue.

3. Insertion Loss: Maximum 0.20 dB.

4. Return Loss: Maximum 55.0 dB.

5. Pigtail length shall be sized per field install conditions for each FDP location, 3 meter minimum.

6. Pigtails fibers shall be provided in bundle of up to 12 fibers, individually jacketed with a 900um tight buffer, color-coded in accordance with TIA/EIA 598 Fiber Optic Color Code.

7. Pigtail fibers shall meet the same physical and optical characteristics of the fiber cable strands that it will be spliced to.

B. Manufactured Fiber Cable Pigtail Assemblies:

1. A manufactured pigtail assembly may be utilized to provide connectivity from a FDP to a separate field splice enclosure, such as a fiber splice case located in a communications manhole. The assembly shall allow the connection of FDP’s to fiber a cable backbone cable via a drop cable assembly. Splicing of the drop cable

to the mainline backbone cable shall be performed within the splice case. When utilizing a fiber cable pigtail assembly, FDP tray splicing is not to be done.

2. The manufactured pigtail assembly shall be constructed so as to be installed in conduit, and shall meet the fiber cable requirements as specified within this contract.

3. Manufactured Pigtail assemblies shall be designed, ordered, pretested, for the specific location that it will be utilized. Excessive cable length in the assembly shall not be permitted.

4. Cable Loop: Maximum 20 feet.

C. Fiber Patch Cords:

1. Fiber patch cords shall be cable assemblies consisting of flexible with connectors compatible with the equipment it terminates on. Patch cords shall be complete factory fabricated assemblies from manufacturer's standard products lines.

2. Provide fiber patch cords as required for the following applications:

a. From port to port within same FDP, for fiber cross-connection patching.

b. From Network switch equipment optical ports to FDP, to support Link Communications Networks deployment, for both TCN and EFN. Coordinate with Sound Transit IT department.

c. From 26 kV switchgear equipment to FDP.

d. From TPSS equipment to FDP.

e. From signal equipment to FDP.

3. Single-Mode Duplex Zip cord type, ADC Krone or approved equal.

4. Patch Cord Cable Construction: Shall allow for small bend radius for installation in space-constrained areas. Shall contain a dielectric strength member and a protective outer jacket.

5. Patch Cord Jacket Color: Yellow for single mode.

6. Connector shall be LC UPC for FDP ports, connector ends for field equipment ports.

7. Patch cord optical fiber shall meet the same characteristic requirements of the distribution panel terminated cable to which it mates.

8. Patch cords installed within ladder tray and at conduit to equipment transitions shall be installed in flexible corrugated innerduct for protection.

D. Radio Equipment Interconnect Connectors:

1. Field Installable Ultra Physical Contact (UPC) connector (Angle Polish Connector (APC) for analog system), LC connectors, color green, 3M or approved equal. Connectors compatible with radio equipment.

2. Single piece, pre-assembled design.

3. Manufacture supplied connector finishing tool, with fiber holder.

4. 900um buffer strain relief.

5. Factory-polished fiber stub in ferrule.

6. Keyed, angle cleave splice for APC.

7. Insertion Loss: Maximum 0.20 dB.

8. Return Loss: Maximum 55.0 dB.

2.06 INNERDUCT

A. All fiber optic cables in raceway shall be installed in innerducts.

B. Refer to Specifications 26 05 33 - Raceway, Boxes, Hanger and Supports for Electrical Systems for additional requirements for innerduct.

C. Constructed of flame retardant PVC material and shall meet the following flammability requirements:

1. Inside building horizontal ladder tray, and inside building riser inner duct shall meet the UL 224 flame test.

2. Outside Plant (OSP), inner duct installed in tunnel or air plenum environment shall be LSZH, meet BSR/UL 224, and NFPA 130.

D. OSP innerduct shall be installed in embedded signal/communications (SC) conduits and duct banks:

1. OSP innerducts shall be 1.25-inch. OSP innerduct shall include the following features:

a. Constructed of semi rigid flexible halogen free tubing with longitudinally ribbed inner wall, smooth exterior walls.

b. Furnish with factory installed nylon pull ropes.

c. Suitable for pulling into conduit/ducts and provided with fittings/connectors necessary to make up a complete raceway system. Innerduct system with connectors/fittings shall be suitable for blowing fiber at a pressure of 125 psi.

d. Reel lengths shall be provided as necessary to ensure that ducts are continuous; one piece runs from maintenance hole/hand hole to maintenance hole/hand hole. No innerduct connectors are allowed between maintenance holes/hand holes.

e. Pulling accessories used for innerduct shall be compatible with materials being pulled. Accessories shall be furnished as required to complete the installation, including but not limited to, innerduct lubricants, spreaders, applicators, grips, swivels, harnesses, and line missiles.

2. Station Equipment Room Cable Tray Innerduct.

a. Inside building horizontal/cable tray innerduct suitable shall be flexible corrugated type.

b. Utilize corrugated horizontal innerduct for fiber optic patch cords installed from systems equipment to fiber distribution panels.

c. Inner Diameter: 1 inch minimum, compatible with fiber patch cords installed within.

E. Acceptable Manufacture: Carlon, Pyramid, or approved equal.

2.07 IDENTIFICATION TAGS

A. Material: Plastic, heat-shrinkable radiation cross-linked, thermally stabilized, flame-retarded modified polyolefin sleeves.

B. Label: List device or terminal block destination and origin, and cable number. Utilized Sound Transit Link System Station Identifier and existing fiber cable label scheme in accordance with Sound Transit Light Rail Equipment and Facilities Numbering Standard.

C. Sleeves: Smear resistant prior to shrinking, achieve mark permanency when shrunk without the need for permatizing equipment, or when standard ballpoint pens or high-carbon content fabric ribbons are used.

D. Chemical Resistance: Resistant to common industrial fluids including but not limited to, Freon TF, isopropyl alcohol, and Ethylene Glycol.

E. Tags will be available and installed by/during testing. Tags for connectors will be installed before fusing onto cables. Testing will not proceed without labeling.

2.08 FIBER CABLE FACTORY TESTS

A. Provide certified test reports for each fiber cable type, per the following standards:

1. NFPA-130.

2. Telcordia GR-20-CORE.

3. EIA-455-B

4. IEEE 383 flame test.

5. NES 711/713 smoke/toxicity index.

6. UL 910.

7. NFPA-262.

B. Factory Production Tests: Provide certified test reports for each cable on-reel prior to shipment. These tests shall be performed in accordance with TIA/EIA-455-B.

1. Record end to end loss for each fiber at 1310 nm and 1550 nm for single mode.

2. Provide OTDR trace with both soft trace file, and hardcopy record for each fiber strand.

3. Record cable footage, in accordance with markings and in accordance with OTDR trace.

PART 3 - EXECUTION

3.01 INSTALLATION PLAN

A. Site Verification – Site Survey Report:

1. Verify cable lengths through field verification.

2. Prior to installation, verify conduits, inner ducts, and general site conditions are suitable for the installation of cables and equipment. Verify conduit size, conduit fill, conduit bend radii, manhole spacing, manhole size, raceways, ducts, and associated hardware are proper for the intended installation.

3. Verify required cable length for each cable run prior to installation. Civil stationing appearing on referenced drawings may be used for defining locations and estimating cable lengths. Do not use existing drawings to determine final lengths and cuts. Determine actual lengths by making on-site inspections and measurements.

4. Verify installation design is correct and adequate for cables to be installed.

5. The contractor shall be required to verify condition of available spare fiber and fiber distribution panels at existing stations where new fiber optic cable(s) will connect to

B. Provide installation plan based on site verification activities and work sequence.

C. Fiber Cable Installation Work Plan to include but not be limited to:

1. Pulling or blowing fiber cable into duct-banks, conduit, and inner-duct.

2. Installing and dressing cable into ladder trays, fiber racks/cabinets, and fiber terminal equipment.

3. Splicing fiber cable in FDP fiber panel splice trays.

4. Site Location: Describe and diagram installation area.

5. Provide list of Materials and Equipment to be installed and used.

6. Chronological Plan: List order of cable installation, including estimated time for each cable pull.

7. Plan shall indicate a reasonable average time period to perform each task.

8. Pulling Layout: Provide distances and pull tension calculations for each fiber cable at each section of installation.

9. Installation Methods: Use the least damaging installation method to install cables in order to ensure maximum cable life and maintainability.

10. Innerduct: Where specified and where practical use innerduct within larger ducts to: optimize conduit usage, prevent damage to cable, and allow for fiber blowing installation methods. Innerduct shall be compatible with fiber cable installed within.

11. Slack Cable: Design installation with 50-foot slack coils at either end of cable run, and at splice locations.

12. Bend Radius: Minimum 10 times the diameter of cable or manufacturers' recommended minimum bending radius, whichever is greater.

13. Set Up and Pull Locations: Protect cable on reel and in slack loops. Protect cable after working hours where cable installation is not completed during a single shift.

14. Pull/Blowing Lengths: Allow a 20 percent margin in cable tensile strength. Do not exceed the lesser of 80 percent of the cable's maximum tensile rating or 600 pounds during installation. Identify assist points for blowing cable.

15. Maximum Vertical Rise: Calculate distance over which cable is self-supporting. Provide cable strain relief at top of each vertical rise and every time 80 percent of vertical rise rating of cable is exceeded.

16. Dynamometer: If a winch or pulling machine is used during installation, use a dynamometer to monitor cable tension. Provide pulling equipment and tension monitoring device list.

17. Drawings: Provide a detailed cable plan for each cable pull.

18. Provide proper procedures for feeding cable into conduit, to maintain proper bend radii and minimize friction.

19. Innerduct: Provide innerduct compatible with fiber optic cable installed within.

D. Contacts: Provide company name of installer, and name and contact information (cell phone) of site supervisor to Resident Engineer.

E. The Contractor's plan shall demonstrate that, for through-substrate penetration firestop systems, in rooms that contain a clean agent fire protection system, the Contractor shall furnish and install products using a method that that complies with NFPA 2001, Section "Enclosure Inspection, and Appendix C "Enclosure Integrity Procedure."

3.02 FIBER CABLE INSTALLATION

A. General

1. Provide cable as indicated in the Contract Drawings.

2. Install cable in accordance to submitted installation plan.

3. Provide Resident Engineer 48 hours' notice, prior to installing cables.

4. Cable Installation within Ductbanks: Install cable in SC conduits as shown in the Issued for Construction Drawings. If field conditions prohibit the use of the Sound Transit designated duct, select a duct for use and coordinate selection with Resident Engineer prior to cable installation.

5. Installation Methods: Utilize the least damaging installation method to install cables in order to ensure maximum cable life and maintainability. Preferred methods shall include:

   a. Cable Blowing – Use Air-jet assist methods in innerduct.

   b. Cable Pulling – Hand Pull, or Winch and Capstan methods.

   c. Cable Laying – In cable trays.

6. Use of Innerduct: Provide inner duct within larger ducts to optimize conduit usage and prevent damage to cable both in current installation and in future installations. Provide smooth-wall/ribbed inner-duct to reduce friction. Apply Pneumatic couplers during cable blowing installation methods.

7. If existing communication cables are already installed within a duct without innerduct, pull new cable into duct (also without innerduct) alongside existing

cables, provided that the new cable can be pulled without damage to itself or to other existing cables already in place.

8. Per NEC, conduit fill ratio for all cable pulls in ducts is not to be exceeded.

9. Material and workmanship shall be of the highest quality assuring durability for minimum life expectancy of 40 years.

10. Replace cables damaged during installation at no cost to Sound Transit.

11. Provide conduit to connect Sound Transit furnished raceways to equipment, enclosures, and devices.

12. Provide installation hardware to route, support, terminate, and protect cable installation.

13. Provide service loops sufficient for maintenance and free movement of attached electrical equipment.

14. Vertical Rise: Ensure no residual tension remains on cable after installation except due to cable weight in a vertical rise.

B. Installation in Conduit or Ducts

1. All Contractor provided conduits and raceways, inspect, mandrel, swab, and clean conduits and innerducts, and ensure a clean, smooth, concentric interior surface prior to cable installation.

2. Before any wire or cable is pulled into a conduit or innerduct, a ball, the diameter not less than 85 percent of the nominal diameter of the conduit/innerduct, shall be pulled through the conduit from one end to the other.

3. If any one of the existing ducts mandrelled in accordance with these specifications is obstructed so that more than 60 minutes is required in attempting to clear the obstruction in a length of duct between adjacent manholes, bring the obstruction to the notice of the Resident Engineer. The Resident Engineer shall verify the duct obstruction and notify the Contractor to proceed with one of the following:

   a. Rod obstructed duct.

   b. Utilize alternate duct.

   c. Remove unused cable from duct and rod duct.

   d. Install cable by alternate method.

4. Clean manholes and determine location of pulling eyes prior to cable installation.

5. Use lubrication when pulling cables into conduit, pipe, or duct bank.

6. Avoid crossover of cables pulling cables.

7. Do not pull tight or kink cables in conduit fittings or boxes.

8. Pull cables installed in a single conduit simultaneously.

9. Fiber optic cable pulling equipment shall include a dynamometer to indicate the pulling force in pounds.

10. Pulling force shall not exceed 90 percent of the maximum allowable installation tension as specified by the fiber optic cable manufacturer.

11. When utilizing pulling methods, the pulling speed of the fiber optic cable shall not exceed 20 meters/minute.

12. Any excess slack between a winch and the cable reel shall be taken up slowly. Maintain an even speed ensuring constant turning of cable reel without surging or jerking.

13. Continuously monitor cable tension with dynamometer or approved equal during cable pull.

14. Dynamometer: Certify dynamometer as calibrated and able to hold peak value of cable pull. Record peak pull value and submit as part of test results.

15. Fit conduit ends with plastic bell ends.

16. Ensure manholes have proper storage hangers for fiber slack.

17. Seal all unused or partially used conduits and Innerduct.

C. Air-Assist Cable Jetting:

1. Utilize air assisted cable jetting methods for fiber cable installation, within sealed continuous innerducts.

2. Install innerducts as needed for proper Air-Jetting installation of fiber cable, utilize existing innerducts where available.

3. Verify proper installation of innerduct system utilizing pressure tight duct splice fittings, in accordance with innerduct manufacture requirements.

4. Perform duct pressurization test, by sealing one end of the duct and pressurizing the duct using a sealed blowing machine.

5. Clean, dry, and prove the duct. If it was not done previously, blow through a hard mandrel to establish that the duct is not crushed.

6. Blow a tight fitting foam carrier through the duct at high pressure. The foam should travel through at approximately 100 foot/second in a clean duct. If excess water or dirt comes from the duct, repeat the process. If necessary, dry the duct with dry airflow.

D. Installation Field Conditions:

1. Pump water out of manholes or other enclosures before installing any cables.

2. Pumping water out of manholes and removal of mud, silt and debris, if required, shall be done by the Contractor, at Contractor’s expense.

3. Provide the necessary power and pumping equipment.

4. Keep manholes or other enclosures or ducts clear of water during cable installation.

5. Water in manholes and handholes to be handled in accordance with state and local regulations, at Contractors expense.

E. Special Protection:

1. Secure fiber cable slack, and splice cases to wall of manhole on approved cable racking device. Fiber optic cable and enclosures shall be properly secured in a manner which will not obstruct the installation of future communications cables within the manhole.

2. Provide appropriate special protection for cables in areas where cables are un-avoidably exposed to hazardous conditions such as vibration or sharp corners on equipment.

3. Protect fiber optic cables during installation while cables are exposed in-between work shifts.

4. Replace, at no additional cost to Sound Transit, any existing or new cable which is damaged as a result of failure to provide such special protection.

F. Sealing:

1. Seal cable entrance openings in equipment enclosures, rooms, and junction boxes with either a compression type fitting or pliable sealing compound after the cable is in place.

2. Use sealing compound seal area around cable where cable emerges from conduit, pipe or duct bank. Seal or cap spare conduits.

G. Installation in Trays or Troughs:

1. Lay cable loosely, neatly, and with a minimum of crossovers.

2. Do not pull cable in trays or troughs.

3. Do not pull tightly around bends.

4. Install dividers to segregate cables of different media types.

5. Route cables between racks or cabinets in overhead cable trays.

6. Provide one foot of slack between the cable tray and each rack to which the cable is connected.

7. Secure cable to last strap of cable tray before transitioning to equipment racks or cabinets.

3.03 INNERDUCT INSTALLATION

A. General: Install inner duct in each conduit as indicated on the Contract Drawings. Where multiple inner ducts are required in one conduit, pull innerducts at the same time.

B. Pull Rope: Install in each inner duct, double back 2 feet of pull rope at each termination:

1. Install pull rope or cable having a minimum tensile strength of 225 kg (500 pounds).

2. Double back 600 mm (2 feet) of pull rope at each termination.

3. The use of nylon rope for pulling cable is prohibited.

C. Couplers:

1. Use couplers to mechanically and pneumatically connect two pieces of innerduct without reducing the inside diameter of the inner duct.

2. Install lubricated pull tape or line in unused inner duct.

3.04 FIBER SPLICING AND TERMINATION

A. All fiber optic cables shall be a continuous run. No intermediate splicing allowed from manhole/handhole to manhole/handhole, and up to the termination location, unless shown in the Issued for Construction Drawings s.

B. When multiple discipline fiber optic cables are installed in one FDP (e.g. TCN, EFN, TPSS, Signals, etc.), the Contractor must develop a fiber optic termination scheme to group application specific terminations and port numbers. The scheme shall follow the entire design; inter-mixing of fiber ports for various fiber cables is not allowed. The fiber termination scheme must require approval from the Resident Engineer before commencing the installation.

C. Installation scheme shall reserve FDP bulk-head ports for each fiber optic cable and shall be the same for the entire project. Leave bulk-head ports empty if FOC cable does not exist at a particular location to conserve uniformity of installation scheme.

D. Splicing shall be completed in optic termination panels with splicing trays as indicated on the Contract Drawings, and per approved splicing procedure.

E. Supply materials required for fiber optic splicing, including but not limited to:

1. De-Natured Alcohol.

2. Fusion Splice Protection Sleeve.

3. Velcro cable ties.

4. Labels.

5. Sealing Tape.

F. Splicing shall be completed using fusion-splicing equipment. Protect individual splices with a reinforced heat shrink sleeve affixed to splice tray.

G. Splice Trays: Firmly mount into outdoor rated splice enclosure or into cabinet mounted splice enclosure as shown in the Issued for Construction Drawings.

H. Minimum 2 feet (610 mm) of bare fiber shall be coiled and stored in the splice tray in a protected manner. Plastic Cable ties may not be utilized to directly secure exposed bare fiber.

I. Minimum 3 feet (914 mm) of each buffer tube in the fiber optic cable shall be coiled and stored in the splice enclosure or distribution panel.

J. Properly fasten cables to prevent against pulling out of the splice enclosure or distribution panel. The fiber cable central strength member shall be attached to the FDP, the outer jacket of the cable shall be attached to the FDP with a cable clamp. All securing hardware shall be in accordance with FDP manufactured supplied kits and instruction.

K. All fiber optic splices shall be fusion splices. Splices shall be stored within FDP or Splice Case splice trays for the purpose of passing optical connections to FDP pre-connectorized pigtail assemblies, or to an additional OSP fiber cable.

L. Fusion splicing shall be performed by qualified personnel utilizing a splicer equipped with Local Injection Detection (LID) to optimize splices. Maximum Splice Loss Attenuation: max 0.1dB at 1310, 1550, and 1625nm.

M. Fusion Splicing equipment shall be capable of working on battery power. Provide spare battery units when no local power source is available.

N. Terminate fibers with factory polished pre-connectorized pigtails.

O. Location: Splicing shall be within Fiber Distribution Panels, and Splice Case Enclosures.

P. Fusions splice pigtails shall be labeled with the fiber number using a pre-printed vinyl number tag.

Q. Splice trays shall be labeled including fibers spliced in the tray. Cables at each location shall be designated with the next termination point at the other end of the cable.

R. Design and maintain splice trays as re-enterable.

S. Loop-through splicing shall be used at locations as shown in the Issued for Construction Drawings in lieu of dedicated cables to a served location. In loop-through splicing, only the fiber strands branching off from the main cable to enter a communication room site are cut and spliced. The other fibers are not cut. The jacket is cut from the cable exposing the buffer tubes, fibers being “dropped” are cut and spliced, the remaining fibers are carefully dressed within the splice case (not cut) and continue out of splice case.

T. For fiber optic cables that are the 900um tight buffered designed specifically for direct field connectorizing, install field connectors in accordance with manufacture instruction, utilizing manufacture supplied tools. Prior to field installation. Demonstrate to Resident Engineer for approval, proper installation of field installable type fiber connectors.

U. Notify the Resident Engineer in writing at least 2 weeks in advance of terminating each section of optical cable.

3.05 CABLE IDENTIFICATION

A. Tag cables at the following locations:

1. Termination points.

2. Fiber Distribution Panels.

3. Where cable enters or exits communication rooms or houses, TPSS, signal rooms/houses, manholes, handholds, and housings.

4. On each side of barriers the cable passes through.

5. At aerial exits from conduit risers.

6. Innerducts within handholes/manholes that contain cables shall be tagged with listing of cables are within.

3.06 FIELD TESTING-GENERAL

A. Demonstrate the functionality of the installed system through testing as specified bellow and in accordance with Section 01 95 00 - System Testing and Integration.

B. Tests shall be conducted in accordance with an approved test plan that shall cover the key functional requirements of the Work.

C. Provide suitable test equipment, instruments and labor for the purpose of tests.

D. Test shall be performed after installation is complete.

E. Provide sufficient notice of not less than 5 Working Days prior to the commencement of testing. Submit with this notice a schedule of all tests covered by this notice. A Resident Engineer representative shall be invited to witness each field testing event.

F. Optical Attenuation and OTDR testing shall be recorded: from FDP to FDP (both Inter and Intra station), and for Radio Cabinet fiber cable connector link between stations.

G. All Attenuation and OTDR testing shall be done bi-directionally on each strand. For Fiber Cable strands that are dedicated for future terminations as part of Link expansion, temporary fiber pigtail connectors shall be spliced to bare strands as required for the purpose of bi-directional testing. Transmit and receive launch cables shall be utilized.

H. All fiber optic strands shall be tested in accordance with the field tests specifications defined by the TIA/EIA-568-B.1-2, TIA-568-C.2 and FOA testing procedures and shall utilize transmit and receive launch cables.

I. TIA/EIA-568-B.1-2, shall be used to define the passive cabling network, to include cable, connectors, and splices (if present), between two Fiber Distribution Panels (connecting hardware). This TIA/EIA document shall be used to describe all applicable link segments.

J. All of fiber cabling links installed shall be tested and shall pass the requirements of the standards mentioned above, including patch cords after they have been installed between equipment and FDP. Any failing links shall be diagnosed and corrected prior to system acceptance. The corrective action shall be followed with a new test to prove that the corrected link meets the performance requirements. Final passing results of tests for all links shall be provided in the test results documentation. All terminations will be cleaned and inspected with an electronic microscope and a soft and hard copy kept and presented with the testing results.

K. Fiber optic technicians shall be qualified and have obtained a certificate, as proof thereof to execute all fiber optic testing. Certificates may have been issued by any of the following organizations or an equivalent organization:

1. The manufacture of the fiber optic cable or connectors.

2. The manufacture of the test equipment used for the field certification.

3. Training organizations authorized by BICSI (Building Industry Consulting Services International).

L. Field test instruments for single mode fiber cabling shall meet the requirements of TIA/EIA-526-7A-B and TIA-568-C

M. Test instrument calibration date shall be within the calibration period recommended by the vendor in order to achieve the vendor specified measurement accuracy.

N. Fiber optic test launch cables and adaptors shall be of high quality and the cables not show excessive wear resulting from repetitive coiling and storing of the test instrument interface adaptors.

O. Prior to testing, all fiber optic connectors and bare fiber ends are to be properly cleaned using a residue free alcohol solution (better than 91 percent de-natured alcohol and distilled water) and compressed air.

P. The pass or fail condition for the link under test is determined by the results of the required individual tests.

Q. A pass or fail result for each parameter is determined by comparing the measured values with the specified test limits for that parameter.

R. All field testing requires signature of an independent witness approved by Resident Engineer.

3.07 FIELD INSTALLATION TESTING

A. Pre-Installation Testing:

1. Pre-installation tests shall be conducted on the cable reels after shipment to but prior to installation. These tests shall be performed in accordance with TIA/EIA-455-B.

2. Verify fiber strand continuity and cable length for fiber cables on shipment reel, verify cable length with printed footage marking on cable jacket. Verify Buffer tube construction and fiber strand count.

3. Provide OTDR trace at 1310nm and 1550 nm, with both soft trace file, and hardcopy record for each fiber strand including the electron microscope files.

B. Fiber Cable Plant Testing- Attenuation Loss.

1. In compliance to TIA/EIA-568, the performance parameter for field testing of fiber optic links shall be link attenuation (insertion loss).

2. Link attenuation shall be calculated by the following formulas as specified in ANSI/TIA/EIA-568:

a. Link Attenuation = Cable Attenuation + Connector Attenuation + Splice Attenuation.

b. Cable Attenuation (dB) = Attenuation Coefficient (dB/km) x Length (km).

c. Connector Attenuation (dB) = number of connector pairs x connector loss (dB). Maximum allowable connector loss = 0.75 dB.

d. Splice Attenuation (dB) = number of splices (S) x Splice loss (dB). Maximum allowable splice loss = 0.2 dB.

e. The maximum values for the Attenuation Coefficient are listed below:

1) Single mode fiber cable (outside plant), 1310 nm: 0.5 dB/km.

2) Single mode fiber cable (outside plant), 1550 nm: 0.5 dB/km.

f. Link attenuation shall not include any active devices or passive devices other than cable, connectors, and splices.

g. Test equipment that measures the link length and automatically calculates the link loss based on the above formulas is preferred.

3. In the above link test parameters, attenuation is based on the use of the Two Reference Jumper Method specified by TIA/EIA-526-7, or the equivalent method. The tester shall follow the procedures established by these standards or application notes to ensure accuracy of tests results.

4. Single-mode fiber links shall be tested at 1310 nm and 1550 nm in accordance with TIA/EIA-526-7, Method utilizing Two Reference Jumpers or the equivalent method. Single-mode links shall be certified with test tools using laser light sources at 1310 nm and 1550 nm.

C. Fiber Cable Plant - (OTDR) Testing:

1. Fiber Optic Testing utilizing an Optical Time Domain Reflectometer (OTDR) shall adhere to the following specifications: TIA/EIA 455-78,TIA/EIA 455-133.

2. OTDR Acceptance Testing: Fiber Links and Splices:

   a. OTDR testing to be completed on each section of the fiber network after splicing is completed.

   b. Bi-directional OTDR reports shall be generated with the OTDR manufacturer's software.

   c. Fiber spans must meet calculated test threshold criteria.

   d. OTDR traces shall be recorded in suitable electronic format. OTDR vendor approved software tools and applicable licenses required to view, inspect, sort, and print the OTDR traces shall be provided to Resident Engineer at least 30 days prior to start of OTDR testing at no additional charge.

   e. A fiber link shall be defined as a continuous section of fiber from connector to connector that may pass through a number of intermediate splices.

   f. Test each fiber link in the cable at 1310 nm and 1550 nm (for single-mode) operating wavelengths for anomalies and to ensure uniformity of cable attenuation and connector insertion loss.

   g. Use a dedicated "launch-cable" patch cord of sufficient length to ensure that start of the fiber under test is not in the "dead zone" of the OTDR. The first connector of the link under test shall be visible on the trace.

   h. Optical Return Loss (ORL) for each link shall be measured.

   i. Fiber link length shall be measured.

   j. Test Results:

      1) Reflective events shall not exceed minus 40 dB.

      2) Connections shall not exceed 0.75 dB of attenuation.

      3) Non-reflective events (splices) shall not exceed 0.2 dB (bi-directional average). Fusion splice losses in excess of 0.2 dB requirement shall be re-spliced and re-tested until compliant at the contractors expense. Deviations from maximum splice loss may be approved by Resident Engineer on a per splice basis.

      4) Point discontinuities shall not exceed 0.1 dB.

      5) ORL shall be less than minus 30 dB.

   k. OTDR Test results shall include OTDR link and channel traces and event tables at the required wavelengths, and the length for each optical fiber as calculated by the OTDR.

3.08 FIELD SYSTEM TESTING - FIBER SPAN CHARACTERIZATION

A. General Requirements:

1. Perform fiber optic Characterization testing on 10GigE and GigE Inter-station fiber strand links.

2. For traffic carrying 10GigE or GigE Links, Fiber Characterization Testing shall be from equipment node patch cord to equipment node patch cord and include all intermediary FDP fiber patch cross-connections that make up the full optical path of the link under test.

3. These Fiber Characterization Tests are in addition to the General Fiber cable strand testing required for fiber cable strands (active and dark)

4. Fiber characterization is defined as a series of tests taken on a fiber optic span to determine the integrity of the fiber, installed practices, and performance for a desired transmission rate (1Gb/s or faster) and or Service to be implemented (DWDM). Fiber Qualification tests:

    a. Optical Return Loss (ORL): 1310nm and 1550nm wavelength from both fiber ends.

    b. Optical Loss Test Set (OLTS): End to end Insertion Loss at 1310nm, 1550nm & 1625nm wavelengths, bi-directionally averaged.

    c. OTDR: 1310nm, 1550nm & 1625nm wavelengths, bi-directionally averaged.

    d. Polarization Mode Dispersion (PMD): 1310nm and 1550nm wavelength, single ended.

    e. Chromatic Dispersion (CD): 1310nm, 1520nm to 1630nm at 10nm wavelength increments, single ended. Test instrument shall save the results in memory and to supply a hard and soft copy.

B. ORL and Optical Loss Test Parameters.

1. Required fiber spans shall be tested with optical power meter and light source combination. ORL measurements shall be conducted at 1550nm only. The loss results shall be conducted at 1310nm, 1550nm and 1625nm and include measurements for:

    a. ORL results from A to B and B to A.

    b. Actual loss of the fiber span under test from A to B and B to A.

    c. Average bi-directional loss of the fiber span under test.

2. All loss readings shall be within calculated loss budget for link under test. Exceptions shall be communicated to Resident Engineer prior to leaving test location. Fiber test contractor to provide corrective action that will resolve any span test exceptions prior to use by network equipment. ORL and Optical loss reports to be submitted as part of final report to Resident Engineer for approval.

C. OTDR Test Parameters:

1. Required fiber spans shall be tested with an OTDR. The OTDR tests shall be conducted at 1310nm, 1550nm and 1625nm and include measurements for:

    a. Total end to end average loss (bi-directionally) of fiber under test.

    b. Total length of fiber span under test.

    c. Average loss (bi-directionally averaged) of each spice in the fiber span under test.

d. Reflectance and average loss of each connector in the fiber span under test.

2. Bi-directional OTDR reports shall be generated with the OTDR manufacture's software. Fiber spans shall meet calculated test threshold criteria. Exceptions shall be communicated to Resident Engineer prior to leaving test location. Provide corrective action that will resolve any span test exceptions prior to being used by network equipment. OTDR test reports, including raw trace files to be submitted as part of final report to Resident Engineer for approval.

D. Dispersion Test Parameters (PMD and CD):

1. Polarization Mode Dispersion (PMD) results shall be conducted at 1310nm and 1550nm (Broadband) and include:

a. PMD results for fiber span under test (in ps).

b. PMD coefficient result for the fiber under test (in ps/√km).

c. Pass / Fail indication for the fiber under test.

2. Chromatic Dispersion (CD) measurement tests are conducted across the spectral range from 1310nm, 1520nm to 1630nm at 10nm increments. Include results for:

a. Zero dispersion point for fiber under test (in nm).

b. Dispersion at wavelengths to be transmitted (in ps/nm).

c. Dispersion normalized to the length of the fiber span under test (in ps/nm-Km).

3. PMD and CD results to be generated by equipment manufacture software. Test results shall be span thresholds per Link bit rate speeds. Fiber test contractor to Provide corrective action that will resolve any span test exceptions prior to use by network equipment. PMD/CD test reports to be submitted as part of final report to Resident Engineer for approval.

E. Fiber Characterization Test Acceptance Criteria.

1. Attenuation Threshold:

Splice/Connector Specifications	
Average Splice Loss (bi-directional) (ea.) (max)	0.20dB
Connector Loss (ea.) (max)	0.50dB
Connector Reflection	UPC: -50dB APC: -55dB
Fiber Attenuation Guidelines	
Attenuation (dB/Km)	
1310nm, 1550 nm	***1625 nm***
0.25	0.25
Max loss budgets (in dB) will be determined by: (Length in km * 0.25)+(#connector pairs * 0.5)+(#splices * 0.2)	

2. ORL Threshold: ORL results will be 27dB or greater for 1310nm, 1550 nm and 1625 nm.

3. PMD Threshold: Based on industry standards and are specific to the transmission rate of the network system.

PMD Thresholds		
Bit Rate	**PMD (Delay)**	**PMD Coefficient**
2.5 Gb/s	40 ps	<2.0 ps/√Km
10 Gb/s	10 ps	<0.5 ps/√Km
40 Gb/s	2.5 ps	<0.125 ps/√Km

4. CD Threshold: Based on industry standards and are specific to the transmission rate of the network system:

CD Thresholds	
Bit Rate	**CD (Delay)**
2.5 Gb/s	16640 ps/nm
10 Gb/s	1040 ps/nm
40 Gb/s	65 ps/nm

5. Fiber Characterization Test Results:

   a. Test procedures and results shall be documented precisely and complete reports shall be provided to the satisfaction of the Resident Engineer.

   b. Based on field test results, a detailed fiber span analysis report with recommendations identifying the transmission capabilities shall be generated. Links under test shall support the GigE or higher transmission speeds suitable for MPLS Network backbone links.

   c. Submittals shall include, but are not limited to, test plans and procedures, pass/fail criteria for each link, the forms for recording of test and test results including test witness signature areas, results analysis and recommendations. Submittals shall be organized with all tests performed on a specific cable submitted at one time, not as separate submittals.

3.09 CABLE PLANT TEST RESULT DOCUMENTATION

A. The test result information for each link shall be recorded in the memory of the field test equipment upon completion of the test.

B. The test result records saved by the test instrument shall be transferred into a Windows-based database utility such as Microsoft Access or approved equal that allows for the maintenance, inspection and archiving of these tests records. Test results shall be transfer to the PC unaltered.

C. Test results shall be turned over to the test witness at the end of each testing work shift. The fiber testing technician shall provide the stored OTDR trace files of the fibers under test via a USB output port for transfer to a portable USB flash thumb drive. The OTDR trace file results shall be in an electronic format to allow Resident Engineer to view the trace files utilizing standard OTDR trace file viewer software.

D. OTDR traces shall be recorded in suitable electronic format. OTDR vendor approved software tools and applicable licenses required to view, inspect, sort, and print the OTDR traces shall be provided to Resident Engineer at least 30 days prior to start of OTDR testing at no additional charge.

E. Expand the vertical and horizontal scales used on the OTDR to maximize the amount of detail shown on the OTDR trace, even if these parameters can be adjusted later using display software.

F. Ensure that traces identify the end points of the fiber under test and the fiber designation. If this information is not provided by the trace itself, provide a cross-reference table between the stored trace file name and the fiber designation.

G. A paper copy of the test results shall be provided that lists the links that have been tested with the following summary information:

1. The Identification of the link in accordance with the optical fiber cable naming convention defined in the latest Sound Transit's Light Rail Equipment and Facilities Numbering Plan.

2. The overall Pass/Fail evaluation of the link under test including the attenuation worst-case margin (margin is defined as the difference between the measured value and the test limit value).

3. The date and time the test results were saved to the test equipment memory.

4. All cable Test results shall be grouped by cable identification name/number for each cable as one submittal of that particular cable test results.

H. General information shall be provided in the electronic database containing the fiber test result information for each link:

1. Identification of the site.

2. Overall Pass/Fail evaluation of the link under test.

3. Name of the standard selected to execute the stored test results.

4. Fiber cable type and the value of the 'index of refraction' used for length calculations.

5. Date and time the test results were saved to the test equipment memory.

6. Model, serial number, and calibration date of the optical test equipment.

7. Revision of the tester software and the revision of the test standards database within the tester.

I. Provide detail test results data in the electronic database for each tested optical fiber shall contain the following information:

1. Identification of the link/fiber in accordance with the naming convention defined in the latest Sound Transit's Light Rail Equipment and Facilities Numbering Plan.

2. Insertion loss (attenuation) measured at each wavelength, the test limit calculated for the corresponding wavelength and margin (difference between the measured attenuation and the test limit value).

3. Link length shall be reported for each optical fiber for which the test limit was calculated based on the formulas specified in this specification under Fiber Cable Plant Performance Testing Parameters.

3.10 FIBER OPTIC SYSTEM LABELING

A. Fiber Optic Cable:

1. Fiber Optic cable shall be identified/labeled whenever entering and exiting a splice enclosure, manhole/hatch, cabinet, FDP, pull point/box/hatch, and at all FDP terminals.

2. Label fiber cable strand counts that are in each splice tray by affixing a permanent label to surface of splice tray cover.

3. Permanent marking tags fastened securely to the cables shall be used for identification.

4. Cable designation shall consistently conform to the overall scheme approved by Sound Transit to indicate location, circuit, device, cable number, node, port position etc.

5. Letters and numbers shall be used. Identification shall be made with a clear, machine produced, indelible marking.

B. Innerduct:

1. Innerduct shall be labeled at each end and where it is passed through a vault as “ccc - iii”, where ‘ccc’ is the conduit number from the site as-built drawings and ‘iii’ is the innerduct number, within the conduit.

C. Fiber Distribution Termination Panels:

1. Label each termination panel at each termination point for each fiber.

2. Termination labels shall conform to the overall scheme approved by Sound Transit to indicate location, device and next access point.

3. Identification shall be made with a clear, machine produced, indelible marking.

3.11 FINAL INSPECTION

A. Final Inspection will include the following activities:

1. Contractor must support physical inspection of the cable plant by the Resident Engineer..

2. Upon completion of final inspection activities, any deficiencies will be recorded. Deficiencies shall be corrected by the appropriate party and will be re-inspected by the Resident Engineer.

3. Final Inspection shall not be deemed complete until deficiencies are corrected.

3.12 SYSTEM SUPPORT

A. System Documentation and Record Drawings:

1. As-Built Documents. Provide the following documents as part of the as-built set:

a. Cable Plant Test Results documentation in accordance with the above specifications.

b. Optical fiber cable plant schedule including: Cable ID, cable length, conduit/duct bank installation location, splice locations, fiber distribution panel port and tray terminations locations, patch cord routing.

c. Drawings: Fiber Plant schematic, Riser diagram, Point to Point fiber strand termination details, Fiber Distribution Panel details.

d. Final Equipment BOM lists.

END OF SECTION

SECTION 27 15 02

COMMUNICATIONS CONDUCTORS AND CABLES

PART 1 - GENERAL

1.01 SUMMARY

A. Section includes:

1. Requirements for Communications Conductors and Cables.

a. Conductors:

1) Communications conductors and cables shall consist of 120VAC power and control wiring, grounding conductors, audio speaker wiring, 24 VDC wiring and analog signal wiring for BMS, EVS, PBX, Door Access, Voice, PA, VMS and CCTV systems including digital and analog devices.

b. Unshielded Cable:

1) Audio/Public Address circuits installed in environments where electromagnetic compatibility (EMC) can be accomplished through BICSI TDMM and TIA/EIA-569-C compliant separation from sources of electromagnetic interference (EMI) shall utilize unshielded cable.

c. Shielded Cable:

1) Audio/Public Address circuits installed in environments where electromagnetic compatibility (EMC) cannot be accomplished through BICSI TDMM and TIA/EIA-569-C compliant separation from sources of electromagnetic interference (EMI) shall utilize shielded cable.

1.02 REFERENCES

A. This Section incorporates by reference the latest revisions of the following documents:

1. American Society of Mechanical Engineers (ASME):

a. ASME Nuclear Quality Assurance (NQA-1).

2. Building Industry Consulting Service International (BISCI):

a. BICSI Information Technology Systems Installation Methods Manual (ITSIMM), 7th Edition.

b. BICSI Telecommunications Distribution Methods Manual (TDMM), 13th Edition.

3. Code of Federal Regulations (CFR):

a. 10 CFR 50, Appendix B Quality Assurance Criteria for Nuclear Power Plants and Fuel Reprocessing Plants.

4. Institute of Electrical and Electronics Engineers (IEEE):

   a. IEEE 1202 Standard for Flame-Propagation Testing of Wire and Cable.

5. International Organization for Standards (ISO):

   a. ISO 9001 Quality Management Systems.

6. National Fire Protection Association (NFPA):

   a. NFPA 70 2014 Edition National Electrical Code.

   b. NFPA 72 National Fire Alarm and Signaling Code.

   c. NFPA 130 Standard for Fixed Guideway Transit and Passenger Rail Systems.

   d. NFPA 262 Standard Method of Test for Flame Travel and Smoke of Wires and Cables for Use in Air-Handling Space.

7. Telecommunications Industry Association Electronic Industries Alliance (TIA/EIA):

   a. TIA/EIA-568-C Generic Telecommunications Cabling for Customer Premises.

   b. TIA/EIA-569-C Commercial Building Standard for Telecommunications Pathways and Spaces.

   c. TIA/EIA-606-A Guide: Administration Standard for the Telecommunications Infrastructure of Commercial Buildings.

8. Underwriters Laboratories (UL):

   a. UL 444 Standard for Safety Communications Cables.

   b. UL 969 Standard for Marking and Labeling Systems.

   c. UL 1685 Standard for Vertical-Tray Fire-Propagation and Smoke- Release Test for Electrical and Optical-Fiber Cables.

   d. UL 2196 Standard for Fire Test for Circuit Integrity of Fire-Resistive Power, Instrumentation, Control, and Data Cables.

1.03 PERFORMANCE REQUIREMENTS

A. Preliminary Design Document Requirements:

1. Show with block diagrams the function and geographic layout of the facility or station communications conductor and cable connections to devices, to include:

   a. Assessment of suitability for design of duct bank, inner ducts, conduits, and general site conditions for the installation of cables and equipment.

   b. Duct bank and inner duct/conduit occupancy drawings.

   c. Duct/conduit plan drawings with distance indications on the riser diagrams.

   d. Duct and conduits with communications conductor and cable runs shall comply with applicable NFPA 130 requirements for pathway survivability and redundancy.

e. Conductors and cables shall be listed in a table in the design document(s).

f. Spare communications wiring capacity planned to be left over, after handwork of the facility/station.

g. Termination connectors shall be noted for type, brand and model, on the drawings and tables.

h. Communications network connections shall be noted in the Cables design document(s) for signal type running over the wire for RS-232, RS-422, RS-485, ModBus, Profibus, etc., on the drawings and tables.

i. Conductors and cables must have the terminations noted for grounding or not, both in the drawings and tables.

j. A grounding hierarchical structure must be shown in a dedicated drawing, from remote devices back to Communications Rooms and back to main facility or station ground. Special attention must be paid to proper ground isolation.

2. Termination Requirements:

a. Terminate wiring entering and leaving enclosures on a numbered terminal strip.

b. Arrange wiring for vertical conduit entry. Terminal blocks must have no more than two wires connected per termination point. Factory jumpers may be used where required.

c. Provide 25 percent spare in each enclosure of each type of termination.

1.04 SUBMITTALS

A. Submit:

1. Drawings:

a. The initial drawing list must contain anticipated copper Communications Cabling System drawings that will be created as part of this Contract. Standard manufacturer drawings that are generally provided with the product or subsystem need not be included in the drawing list.

b. Drawings must identify conductor and cable types, gauge number, and shielding-ground connections.

c. Conductors, cables, equipment and communications devices must be named and labeled in accordance with Sound Transit existing standards.

d. Each subsequent submittal after the preliminary design must refine and update the drawing list.

e. The final as-built drawing list must contain Communications Conductors and Cables created specifically for this Contract.

2. Test Plans:

a. Pre-testing of materials test plan, and results document.

b. Cable Installation plan, and installation inspection results document.

c. Field installation testing plan and results.

3. Product Specification Sheets.

4. Bill of Materials.

5. Preliminary Design Document.

6. Technical Data Sheets:

   a. Submit complete technical data sheets for the conductors, cables and ancillary equipment proposed. Demonstrate compliance with mechanical and electrical properties specified herein.

7. Manufacturer Experience:

   a. Submit information for each proposed manufacturer including experience in manufacturing conductors, cable, and termination equipment for rapid transit and railroad applications and quality assurance program and warranty.

8. Contractor Experience:

   a. Submit information for contractor staff including experience in installation and termination of twisted pair communications cable for rapid transit and railroad applications and quality assurance program and warranty.

9. Conductors and Cable Lists, Plans and Drawings:

   a. Submit conductors and cable system schematic, plan, and detail drawings, indicating complete conductor and cable system with device and equipment names at each end. Note equipment placement within station and cross-passages. Include profiles showing location of cabinets/racks, rack elevation drawings, including cable termination details. Specify cable labeling in accordance with Sound Transit existing standards.

10. Material/Equipment/Assembly/Installation Details:

    a. Submittal must include materials, equipment, assembly and installation required to carry out functions and purposes indicated in these Specifications, and to make the system suitable for the purpose for which it is intended, whether or not such materials, equipment, assembly and installation are specially indicated in the requirements of these Specifications.

11. Termination Instructions:

    a. Submit approved termination connectors.

12. Communications Conductor and Cable Installation/Pull Plan:

    a. Submit Installation plan as outlined herein.

    b. Develop a written cable installation procedure and check-off list for approval prior to cable installation in accordance with TIA/EIA 568-C and TIA/EIA-569-C.

    c. Submit information for each segment of cable to be installed.

d. Provide pulling layout including distances and tension calculations, for each cable pull.

e. Provide pulling equipment and tension monitoring devices.

f. Provide chronological plan for installing cable, including estimated time for each pull and plan for protecting cable on-reel and in slack loops during installation.

g. Installation plan must be based on Contractor's review of the conduit plans, and field site survey.

h. Include a cable plan and installation information for each cable pull.

i. Verify conduit size, conduit fill, conduit bend radii, manhole spacing, manhole size, raceways, ducts and associated hardware are proper prior to the intended installation.

j. Verify required cable length for each cable run prior to installation. Civil stationing appearing on referenced drawings may be used for defining locations and estimating cable lengths. Do not use existing drawings to determine final lengths and cuts. Determine actual lengths by making on-site inspections and measurements.

k. Include manufacture approved procedures for feeding cable into conduit, to maintain proper bend radii and minimize friction.

13. Testing Documents:

a. Test procedures for each test.

b. Test results for each test a maximum of 10 days after date test was performed.

c. Factory Production Test:

1) Submit Certified Test Report prior to shipment of cables.

d. Pre-Installation Reel Test: Submit Communications Cable Reel Test Report after shipment, but prior to installation.

e. Field Test Report, including the following:

1) Continuity test.

2) Insulation resistance test.

3) Cable insulation tests.

14. Spare parts:

a. Provide spare cable remaining on reels.

b. Provide 10 percent spare termination connectors.

B. Transmit:

1. System Documentation and Record Drawings.

a. Record Documents. Provide the following documents as part of the system documentation set:

1) Conductor and cable schedule including: Cable ID, cable length, conduit/duct bank installation location and termination locations.

2) Drawings: Conductor and cabling schematic, Riser diagram, Point to Point cable termination details, termination panel details.

2. Final Equipment Bill of Materials lists.

1.05 QUALITY ASSURANCE

A. Cable Manufacturer:

1. Cable must be manufactured and tested under the control of a Quality Assurance program that meets the requirements of 10 CFR 50, Appendix B, as elaborated in ASME NQA-1, for materials traceability only.

2. Conductor and Cable Manufacturer: Manufacturer must have a performance record demonstrating a minimum of 30 years successful operating experience in transit, utility or industrial power applications for the insulation compound and conductor assemblies provided:

a. Quality Assurance Program: Cable manufacturers, in accordance with requirements of these Specifications, are required to have in place or implement, an effective quality assurance program adhering to the requirements of ISO 9001 to ensure purchase control performance.

b. Sample Specimens: If requested, furnish Resident Engineer sample specimens in 4-foot lengths identical to proposed cable including connectors and peripherals. Sample specimens must remain property of Sound Transit.

B. Communications Cable Design, Installation and Termination Personnel:

1. Installer Qualifications: Cabling Installer must have personnel certified by BICSI on staff.

2. Communications Network Terminations: Trained technicians who have successfully attended an appropriate training program and have obtained a certificate as proof thereof must perform the terminations. Sound Transit may request a copy of the certificates. These certificates must be issued by the following organizations or an equivalent organization:

a. Manufacturer of the connectors or cable.

b. Training organizations (e.g., BICSI, A Telecommunications Association headquarters in Tampa, Florida; ACP [Association of Cabling Professionals™] Cabling Business Institute located in Dallas, Texas)

1.06 DELIVERY, STORAGE, AND HANDLING

A. Packing:

1. Ship cable on non-returnable wooden or plastic reels.

2. Drum Diameter: Minimum 20 times the diameter of cable.

3. Reels: Substantial enough to withstand reasonable handling, designed with inner end of accessible but protected from injury.

4. Cable Ends: Sealed to prevent entrance of moisture and securely fastened to prevent ends from becoming loose during transit.

B. Marking:

1. Mark each reel on outside flange with the following information:

a. Manufacturer's name.

b. Contract name and number.

c. Cable identification number.

d. Cable length.

e. Date of manufacture.

C. Delivery:

1. Inspect cables at time of delivery at construction site to assure no damage was done during shipping.

2. Inspect every reel for physical damage.

3. Submit to Resident Engineer cable reel inspection report.

4. Replace damaged or rejected cable promptly.

D. Storage:

1. Store cables on solid surfaces designed to support cable reels which drain adequately and do not allow accumulation of liquids, oils, or chemicals.

2. Cables must be protected from wetting by rain, snow, and other forms of moisturer.

3. Align and protect cable reels so as not to allow reel flanges to damage other reels.

4. Provide adequate aisles and barricades to allow accessibility and to prevent construction equipment from damaging cable reels.

5. Reseal cable ends promptly when a length is cut from reel.

E. Handling:

1. Handle cable reels using a sling and spreader attached to a shaft through the reel hubs, or by cradling both flanges between lift truck forks.

2. Do not lift reels by top reel flange or drop.

3. Ensure lift truck forks do not touch cable surfaces on reel.

4. Roll reels in the direction opposite the cable wind on reel.

5. Do not lay reels flat.

1.07 PROJECT CONDITIONS

A. In order to conform to the overall project event schedule, the contractor must survey the work areas and coordinate conductor and cabling installation with other applicable trades.

1.08 MAINTENANCE

A. Develop a maintenance plan that defines preventative maintenance, outage repair, and administration procedures required for conductor, cabling and equipment prior to Final Acceptance.

B. List personnel, equipment, and duration required for each procedure developed. Include frequency necessary for preventative maintenance procedures.

PART 2 - PRODUCTS

2.01 MATERIALS

A. Cables:

1. Listed and labeled by an NRTL acceptable to authorities having jurisdiction as complying with UL 444 and NFPA 70 (Article 800) for Communications, Multipurpose Plenum Rated: Type CMP complying with NFPA 262 (smoke and flame propagation testing) or permitted substitute as defined by the NEC complying with UL 1685 (low smoke) and FT4/IEEE 1202 (flame propagation) testing.

2. Cable outer jacketing to be rated for wet locations and operating temperature -20 deg. C to +90 deg. C.

3. Cables must be marked as NRTL verified.

4. Voltage Rating: 300V

5. Fire Resistivity: When required by AHJ per NFPA 130 cable to be 2-hour fire rated complying with UL 2196.

2.02 MANUFACTURED PRODUCTS

A. Conductors:

1. 120 VAC Power and Control Wiring: Single conductor, stranded, soft annealed copper conductors with 600 V cross linked polyethylene insulation type XHHW-2. Wire smaller than 14 AWG must not be used unless specifically called for on drawings.

2. Safety Ground wire, green plastic insulated, soft annealed copper conductors with 600 V cross linked polyethylene insulation type XHHW-2, 14 AWG, connecting the grounding tree from the Communications Rooms to the endpoint devices.

B. Unshielded Cable:

1. Unshielded Audio Cable (Type 1):

a. Description: Twisted pair 12 AWG minimum stranded bare copper polyolefin insulated conductors covered with a UV resistant jacket, in color readily available from manufacturer, typically gray.

b. The cable must not incorporate an overall shield.

C. Shielded Cable:

1. Shielded Audio Cable (Type 2):

   a. Description: Twisted pair 12 AWG minimum stranded bare copper polyolefin insulated conductors covered with a UV resistant jacket, in color readily available from manufacturer, typically gray.

   b. The cable must incorporate an overall helical or longitudinal plastic and metal laminated tape foil shield with 20 AWG minimum drain wire in contact with metal side of tape.

2. 24 V Shielded Twisted Pair Cable (Type 3):

   a. Description: Twisted pair 18 AWG, stranded copper polyolefin insulated conductors covered with a UV resistant jacket, in color readily available from manufacturer, typically black.

   b. The cable must incorporate an overall helical or longitudinal plastic and metal laminated tape foil shield with 20 AWG minimum drain wire in contact with metal side of tape.

3. Analog Signal Wiring Shielded Multiple Twisted Pair Cable (Type 4):

   a. Description: Two (2) or more multiple twisted pairs 18 AWG, stranded copper polyolefin insulated conductors covered with a UV resistant jacket, in color readily available from manufacturer, typically black.

   b. The cable must incorporate an overall helical or longitudinal plastic and metal laminated tape foil shield with 20 AWG minimum drain wire in contact with metal side of tape.

D. Tray Cables:

1. Cables installed in trays mustmust be TC rated. The cables must be installed in accordance with the requirements of NFPA 70 (Article 396).

2. Cables traversing more than 50 feet in a room not installed in an enclosed raceway must be of low smoke zero halogen (LSZH) construction.

E. Terminal Blocks:

1. Manufacturer: Wago, or approved equal.

2. Incoming and outgoing wiring to the panel must be landed on DIN rail mounted, finger safe terminal blocks.

3. I/O wiring terminal blocks must accept between #28 to #12 AWG wire. Select different colors to distinguish inputs and outputs.

4. Analog input circuits must be landed on fused terminal blocks with indicating lamp for blown fuse. Include appropriate fuses rated to protect PLC inputs.

5. Terminal blocks must be screw-type. Spring clamping mechanism terminal blocks must not be accepted.

6. Number terminals with a permanent, nonconductive strip on each block according to detailed wiring drawings to be provided by the Contractor.

7. Provide supervised terminations to detect open circuits for wiring associated with the fire-life safety system.

8. Terminal Strip Colors (not wire colors):

   a. Digital Input Points: Beige

   b. Digital Output Points: Brown

   c. Analog Input Points: Purple

   d. Analog Output Points: Yellow

   e. Power Supply (120 VAC or less): Black (hot), Gray (neutral)

   f. Voltages greater than 120 VAC: Orange (hot), Gray (neutral)

   g. Network: Red/Orange

   h. Grounds: Green

   i. Other Terminal Connections: Beige

F. Cable Tray:

1. Provide cable tray in accordance with Section 26 05 33 - Raceway, Boxes, Hangers and Supports for Electrical Systems.

2. Communications room cable tray size: 24 inches width; 6 inches depth

3. Communications room cable tray to be of the ladder type with 6 inches rung spacing.

G. Identification Tags

1. Material: Plastic, heat-shrinkable radiation cross-linked, thermally stabilized, flame-retarded modified polyolefin sleeves.

2. Label: List device or terminal block destination and origin, and cable number.

3. Comply with TIA/EIA-606-A and UL 969 for labeling materials, including label stocks, laminating adhesives, and inks used by label printers.

4. Sleeves: Smear resistant prior to shrinking, achieve mark permanency when shrunk without the need for permatizing equipment, or when standard ballpoint pens or high-carbon content fabric ribbons are used.

5. Chemical Resistance: Resistant to common industrial fluids including but not limited to; Freon TF, isopropyl alcohol, and Ethylene Glycol.

PART 3 - EXECUTION

3.01 INSTALLATION

A. Install conductors and cables in accordance with BICSI ITSIMM standards and as shown on installation drawings.

B. No low voltage wire or cable must be installed in the same conduit or cable tray with light, power, or Class 1 signal wiring.

C. Power, control and Class I wiring entering racks, control panels or devices must be isolated from low voltage wire and cable by means of a physical barrier or in a slotted wall wire duct separate from the Class 2 and 3 wiring system.

D. Wires and cables must be continuous without splices between junction boxes, terminals, pull boxes, manholes and hand holes.

E. Bend Radius: Minimum 10 times the diameter of the cable or manufacturers' recommended minimum bending radius, but not less than the radii specified in the BICSI ITSIMM “Cabling Terminations Practices” chapter.

F. Install cable in accordance with submitted, and Sound Transit approved, installation plan, and with service loop excess at ends of cable for maintenance and free movement of attached communications equipment.

G. Use lubrication when pulling cables into conduit, pipe, or duct bank.

H. Pulling cable: Comply with BICSI ITSIMM Chapter 4 “Pulling Cable”. Monitor cable pulling tensions.

I. Sealing:

1. Seal cable entrance openings in equipment enclosures, rooms, and junction boxes with either a compression type fitting or pliable sealing compound after the cable is in place.

2. Use sealing compound seal area around cable where cable emerges from conduit, pipe or duct bank.

3. Sealing in accordance with NFPA 130 where required.

J. Installation in Conduit or Pipe:

1. Inspect, mandrel, swab, and clean conduits and ensure a clean, smooth, concentric interior surface prior to cable installation.

2. Clean manholes and determine location of pulling eyes prior to cable installation.

3. Avoid crossover of cables while pulling cables.

4. Do not pull tight or kink cables in conduit fittings or boxes.

5. Pull cables to be installed in a single conduit simultaneously.

6. Fit conduit ends with plastic bell ends.

K. Modifications to communications room including installation of cable in conduits must preserve room seal after cable installation.

L. Cable Shields:

1. Install cable shields electrically continuous between terminations on terminal blocks.

2. Ground the shield of each cable on the terminal block location at the power source end of the cable only to avoid ground loops.

3. Connect ground wire to ground bus.

M. Separation from EMI Sources:

1. Comply with BICSI TDMM and TIA/EIA-569-C for separating unshielded communication cable from potential EMI sources, including electrical power lines and equipment.

2. Separation between open communications cables or cables in nonmetallic raceways and unshielded power conductors and electrical equipment must be as follows:

    a. Electrical Equipment Rating Less Than 2 kVA: A minimum of 5 inches.

    b. Electrical Equipment Rating between 2 and 5 kVA: A minimum of 12 inches.

    c. Electrical Equipment Rating More Than 5 kVA: A minimum of 24 inches.

3. Separation between communications cables in grounded metallic raceways and unshielded power lines or electrical equipment must be as follows:

    a. Electrical Equipment Rating Less Than 2 kVA: A minimum of 2-1/2 inches.

    b. Electrical Equipment Rating between 2 and 5 kVA: A minimum of 6 inches.

    c. Electrical Equipment Rating More Than 5 kVA: A minimum of 12 inches.

4. Separation between communications cables in grounded metallic raceways and power lines and electrical equipment located in grounded metallic conduits or enclosures must be as follows:

    a. Electrical Equipment Rating Less Than 2 kVA: No requirement.

    b. Electrical Equipment Rating between 2 and 5 kVA: A minimum of 3 inches.

    c. Electrical Equipment Rating More Than 5 kVA: A minimum of 6 inches.

5. Separation between Communications Cables and Electrical Motors and Transformers, 5 kVA or HP and Larger: A minimum of 48 inches.

6. Separation between Communications Cables and Fluorescent Fixtures: A minimum of 5 inches.

3.02 TERMINATIONS

A. Terminate conductors. No cable must contain unterminated elements, Make terminations at indicated devices, outlets, terminals, cross connects, and patch panels.

B. Observe minimum bending radius when training cables into final position.

C. Provide slack at terminals sufficient for two re-terminations.

D. Provide cable length sufficient to allow access for removal and inspection of equipment.

E. Provide cables continuous, without splices, between terminals within a housing, enclosure, or piece of equipment.

F. Terminate cables in order according to color code.

G. Identify individual cable pairs at each cable termination with plastic tags.

H. Terminate and identify spare pairs in each cable.

I. Perform terminations under clean and dry conditions.

J. Install terminals with tools and techniques approved by the terminal manufacturer.

K. Carefully remove cable outer sheath to the point of cable entrance at terminations. At the end of the cable sheath or covering, two layers of plastic electrical tape must be applied.

L. Do not untwist twisted pair cables more than 1/2 inch from the point of termination to maintain cable geometry.

3.03 GROUNDING:

A. Connect ground wire terminal of each device to grounding conductor.

B. Install grounding according to BICSI TDMM, "Grounding, Bonding, and Electrical Protection" Chapter.

3.04 CABLE IDENTIFICATION

A. Tag cables at the following locations:

1. Termination points, and intermediate x-connect patch points.

2. Where cable enters or exits communications rooms, enclosures, manholes, handholes, and housings.

3. On each side of barriers that the cable passes through.

4. Every 3 feet along run of cable in cable troughs.

B. Tag cables per Sound Transit equipment identifier. Conductors, cables, equipment and communications devices must be named and labeled with Sound Transit's Light Rail Equipment and Facilities Numbering Plan.

3.05 REPAIR

A. Replace all cables damaged during installation.

3.06 FIELD QUALITY CONTROL

A. Installed cable testing must be recorded on the submittal approved test plan results sheets, with results summary, and submitted for approval.

B. Each twisted pair cable and multi-conductor cable must be tested for electrical continuity. The Contractor must measure loop resistance of each pair and triad. For pair or triad with loop resistance of more than 50 Ohms, the Contractor must take remedial action to meet the requirement of not exceeding loop resistance of 50 Ohms.

C. Each shield conductor must be tested for continuity. Shield drain resistance must not exceed the loop resistance of the pair or triad cable.

D. Insulation Resistance Test:

1. Measure between conductor to grounded shield and shield to ground using a 1000 Vdc megohmmeter in accordance with methods provided by cable manufacturer.

2. Ensure values provided by cable manufacturer are met.

3. Perform test after cable installation, but before terminating cable.

4. If the terminating is not performed immediately after cable installation, perform a second insulation resistance test just before terminating cable.

5. Test each cable installation after terminations are complete. Do not connect equipment cable system during test.

3.07 PROTECTION

A. Provide appropriate special protection for cables in areas where cables are unavoidably exposed to vibration, abrasion, or sharp corners on equipment.

END OF SECTION

SECTION 27 15 13

COMMUNICATIONS COPPER HORIZONTAL CABLING

PART 1 - GENERAL

1.01 SUMMARY

A. Section includes:

1. Requirements for provide all labor, materials, tools, and equipment for the complete installation of all Copper Horizontal Cabling called for in the Contract Documents.

2. To conform to the overall project event schedule, the cabling contractor shall survey the work areas and coordinate cabling installation with other applicable trades.

3. Requirements for copper horizontal balanced twisted pair cables:

a. Horizontal copper cable shall consist of Category 6A or better copper cable for all CCTV camera, VMS, telephones, door controllers, PLCs, Remote I/O and network equipment.

b. Communication circuits installed in environments where electromagnetic compatibility (EMC) cannot be accomplished through BICSI TDMM and TIA/EIA-569-C compliant separation from sources of electromagnetic interference (EMI) shall utilize Category 6A or better F/UTP (shielded) cable. ANSI/TIA 568 (latest version) compliant cable of Category 6A shall be provided unless specific exception is requested from ST for approval.

1.02 REFERENCES

A. This Section incorporates by reference the latest revisions of the following documents:

1. American Society of Mechanical Engineers (ASME):

a. ASME Nuclear Quality Assurance (NQA-1).

2. Building Industry Consulting Service International (BISCI):

a. BICSI Information Technology Systems Installation Methods Manual (ITSIMM), 7th Edition.

b. BICSI Telecommunications Distribution Methods Manual (TDMM), 13th Edition.

3. Code of Federal Regulations (CFR):

a. 10 CFR 50, Appendix B Quality Assurance Criteria for Nuclear Power Plants and Fuel Reprocessing Plants.

4. Insulated Cable Engineers Association (ICEA):

   a. ICEA S-102-732-2009 Standard for Category 6A , 100 Ohm, Individually Unshielded Twisted Pairs, Indoor Cables (With or Without an Overall Shield) for Use in LAN Communication Wiring Systems.

5. Institute of Electrical and Electronics Engineers (IEEE):

   a. IEEE 1202 Standard for Flame-Propagation Testing of Wire and Cable.

6. International Organization for Standards (ISO):

   a. ISO 9001 Quality Management Systems.

7. National Fire Protection Association (NFPA):

   a. NFPA 70 2014 Edition National Electrical Code.

   b. NFPA 72 National Fire Alarm and Signaling Code.

   c. NFPA 130 Standard for Fixed Guideway Transit and Passenger Rail Systems.

   d. NFPA 262 Standard Method of Test for Flame Travel and Smoke of Wires and Cables for Use in Air-Handling Space.

8. Telecommunications Industry Association Electronic Industries Alliance (TIA/EIA):

   a. TIA/EIA-568-X (latest version) Generic Telecommunications Cabling for Customer Premises.

   b. TIA/EIA-568-X.1 (latest version) Commercial Building Telecommunications Cabling Standard.

   c. TIA/EIA-568-X.2 (latest version) Balanced Twisted-Pair Telecommunication Cabling and Components Standard.

   d. TIA/EIA-569-C Commercial Building Standard for Telecommunications Pathways and Spaces.

   e. TIA/EIA-606A Guide: Administration Standard for the Telecommunications Infrastructure of Commercial Buildings.

9. Underwriters Laboratories (UL):

   a. UL 444 Standard for Safety Communications Cables.

   b. UL 969 Standard for Marking and Labeling Systems.

   c. UL 1685 Standard for Vertical-Tray Fire-Propagation and Smoke- Release Test for Electrical and Optical-Fiber Cables.

   d. UL 2196 Standard for Fire Test for Circuit Integrity of Fire-Resistive Power, Instrumentation, Control, and Data Cables.

1.03 PERFORMANCE REQUIREMENTS

A. Preliminary Design Document:

1. Show with block diagrams the function and geographic layout of the facility or station copper horizontal cabling and communications connections to all devices and outlets, to include:

    a. Assessment of suitability for design of duct bank, inner ducts, conduits, and general site conditions for the installation of cables and equipment.

    b. Duct bank and inner duct/conduit occupancy drawings.

    c. Duct/conduit plan drawings with distance indications on the riser diagrams.

    d. Duct and conduits with communications cable runs shall comply with all Specification 26 05 33 - Raceway, Boxes, Hangers and Supports for Electrical Systems.

    e. All cables shall be listed in a table in the Cables design document(s), noting cable distance.

    f. Hierarchical structure of all connections in communications rooms, intermediate closets and cabinets to end points, both functionally, and geographically with distances and locations noted.

    g. All Ethernet communications devices in the Cables design document(s) shall be noted for its connector and associated cable with notation of brand & model RJ45 connector to be used.

    h. All communications cable patch panels shall be shown in drawings.

    i. Spare communications wiring capacity planned to be left over, after handwork of the facility/station.

    j. All termination connectors shall be noted for type, gender, brand and model, on the drawings and tables.

    k. All connections shall be noted in the Cables design document(s) for signal type running over the wire such as Ethernet, RS-232, RS-422, RS-485, ModBus, etc., on the drawings and tables.

    l. All copper communications horizontal cabling shall have the terminations noted for grounding or not, both in the drawings and tables.

    m. A grounding hierarchical structure shall be shown in a dedicated drawing, from remote devices back to Communications Rooms and back to main facility or station ground. Special attention shall be paid to proper ground isolation.

1.04 SUBMITTALS

A. Submit:

1. Drawings:

    a. The initial drawing list shall contain all anticipated copper Communications Cabling System drawings that will be created as part of this Contract. Standard manufacturer drawings that are generally provided with the product or subsystem need not be included in the drawing list.

    b. All drawings shall identify cable types, gauge number, and shielding-ground connections.

c. All conductors, cables, equipment and communications devices shall be named and labeled with Sound Transit's Light Rail Equipment and Facilities Numbering Plan.

d. Each subsequent submittal after the preliminary design shall refine and update the drawing list.

e. The final as-built drawing list shall contain all Communications Cabling Systems created specifically for this Contract.

2. Test Plans:

a. Pre-testing of materials test plan, and results document.

b. Cable Installation plan, and installation inspection results document.

3. Product Specification Sheets.

4. Preliminary Design Document.

5. Design Reviews:

a. Preliminary design review.

b. Final design review.

6. Bill of Materials.

7. Technical Data Sheets:

a. Submit complete technical data sheets for the cable and ancillary equipment proposed. Demonstrate compliance with mechanical and electrical properties specified herein.

8. Manufacturer Experience:

a. Submit information for each proposed manufacturer including experience in manufacturing communications cable, and termination equipment for rapid transit and railroad applications and quality assurance program and warranty.

9. Contractor Experience:

a. Submit information for communications cable contractor staff including experience in installation and termination of balanced twisted pair communications cable for rapid transit and railroad applications and quality assurance program and warranty.

10. Communications Cable Lists, Plans and Drawings:

a. Submit communications cable system schematic, plan, and detail drawings, indicating complete communications cable system, cable lengths and total end to end lengths between network switches to endpoint devices that includes patch panel lengths with device and equipment names at each end. Note equipment placement within station and cross-passages. Include profiles showing location of cabinets/racks, rack elevation drawings, including all cable termination details. Specify cable labeling in accordance with Sound Transit existing standards.

11. Material/Equipment/Assembly/Installation Details:

    a. Submittal shall include materials, equipment, assembly and installation required to carry out functions and purposes indicated in these Specifications, and to make the system suitable for the purpose for which it is intended, whether or not such materials, equipment, assembly and installation are specially indicated in the requirements of these Specifications.

12. Cable Interface Diagrams:

    a. Design submittal shall define backbone cable interfaces to copper horizontal cabling communications equipment.

13. Termination Instructions:

    a. Submit approved termination connectors.

14. Communications Cable Installation/Pull Plan:

    a. Develop a written cable installation procedure and check-off list for approval prior to cable installation in accordance with the latest version of TIA/EIA 568 and TIA/EIA-569-C.

    b. Submit information for each segment of cable to be installed.

    c. Provide pulling layout including distances and tension calculations, for each cable pull.

    d. Provide pulling equipment and tension monitoring devices.

    e. Provide chronological plan for installing cable, including estimated time for each pull and plan for protecting cable on-reel and in slack loops during installation.

    f. Installation plan shall be based on Contractor's review of the conduit plans, and field site survey.

    g. Include a cable plan and installation information for each cable pull.

    h. Verify conduit size, conduit fill, conduit bend radii, manhole spacing, manhole size, raceways, ducts and associated hardware are proper prior to the intended installation.

    i. Verify required cable length for each cable run prior to installation. Civil stationing appearing on referenced drawings may be used for defining locations and estimating cable lengths. Do not use existing drawings to determine final lengths and cuts. Determine actual lengths by making on-site inspections and measurements.

    j. Include manufacture approved procedures for feeding cable into conduit, to maintain proper bend radii and minimize friction.

15. Test Result Documents:

    a. Submit Test Results for each Test.

    b. Factory Production Test:

        1) Submit Certified Test Report prior to shipment of cables.

c. Pre-Installation Reel Test: Submit Communications Cable Reel Test Report after shipment, but prior to installation.

16. Remains from construction parts:

a. Provide spare cable remaining from construction on reels.

b. Provide spare termination from construction connectors.

B. Transmit:

1. Contract Employees Certifications.

C. System Documentation and Record Drawings:

1. Record Documents. Provide the following documents as part of the system documentation set:

a. Horizontal cable schedule including: Cable ID, cable length, conduit/duct bank installation location, termination locations, and patch cord routing.

b. Drawings: Horizontal cabling schematic, Riser diagram, Point to Point cable termination details, termination panel details.

D. Final Equipment Bill of Materials lists.

1.05 QUALITY ASSURANCE

A. Cable Manufacturer:

1. Cable shall be manufactured and tested under the control of a Quality Assurance program that meets the requirements of 10 CFR 50, Appendix B, as elaborated in ASME NQA-1, for materials traceability only.

2. Cable Manufacturer: Manufacturer shall have a performance record demonstrating a minimum of 30 years successful operating experience in transit, utility or industrial power applications for the insulation compound and conductor assemblies provided.

3. Quality Assurance Program: Cable manufacturers, in accordance with requirements of these Specifications, are required to have in place or implement, an effective quality assurance program adhering to the requirements of ISO 9001 to ensure purchase control performance.

4. Sample Specimens: If requested, furnish Resident Engineer sample specimens in 4 foot lengths identical to proposed cable including connectors and peripherals. Sample specimens shall remain property of Sound Transit.

1.06 COMMUNICATIONS CABLE DESIGN, INSTALLATION AND TERMINATION PERSONNEL

A. Installer Qualifications: Cabling Installer must have personnel certified by BICSI on staff.

B. Layout Responsibility: Preparation of Design Documents, Installation Plans, Pulling Schedule, Shop Drawings and Cabling Administration Drawings development by an RCDD.

C. Installation Supervision: Installation shall be under the direct supervision of Registered Technician, who shall be present at all times when Work of this Section is performed at Project site.

D. Terminations: Trained technicians who have successfully attended an appropriate training program and have obtained a certificate as proof thereof shall perform the terminations. Sound Transit may request a copy of the certificates. These certificates may have been issued by any of the following organizations or an equivalent organization:

1. Manufacturer of the connectors or cable.

2. Training organizations (e.g., BICSI, A Telecommunications Association headquarters in Tampa, Florida; ACP [Association of Cabling Professionals™] Cabling Business Institute located in Dallas, Texas)

1.07 DELIVERY, STORAGE, AND HANDLING

A. Packing:

1. Ship cable on non-returnable wooden or plastic reels.

2. Drum Diameter: Minimum 20 times the diameter of cable.

3. Reels: Substantial enough to withstand reasonable handling, designed with inner end of accessible but protected from injury.

4. Cable Ends: Sealed to prevent entrance of moisture and securely fastened to prevent ends from becoming loose during transit.

B. Marking:

1. Mark each reel on outside flange with the following information:

a. Manufacturer's name.

b. Contract name and number.

c. Cable identification number.

d. Cable length.

e. Date of manufacture.

C. Delivery:

1. Inspect cables at time of delivery at construction site to assure no damage was done during shipping.

2. Inspect every reel for physical damage.

3. Submit to Resident Engineer cable reel inspection report.

4. Replace any damaged or rejected cable promptly.

D. Storage:

1. Store cables on solid surfaces designed to support cable reels which drain adequately and do not allow accumulation of liquids, oils, or chemicals.

2. Cables shall be protected from wetting by rain or snow, or any other sources of unintended water.

3. Align and protect cable reels so as not to allow reel flanges to damage other reels.

4. Provide adequate aisles and barricades to allow accessibility and to prevent construction equipment from damaging cable reels.

5. Reseal cable ends promptly when a length is cut from reel.

E. Handling:

1. Handle cable reels using a sling and spreader attached to a shaft through the reel hubs, or by cradling both flanges between lift truck forks.

2. Do not lift reels by top reel flange or drop from any height.

3. Ensure lift truck forks do not touch cable surfaces on reel.

4. Roll reels in the direction opposite the cable wind on reel.

5. Do not lay reels flat.

1.08 MAINTENANCE

A. Maintenance:

1. Develop a maintenance plan that defines preventative maintenance, outage repair, and administration procedures required for communications horizontal cabling and equipment prior to Final Acceptance.

2. List personnel, equipment, and duration required for each procedure developed. Include frequency necessary for preventative maintenance procedures.

PART 2 - PRODUCTS

2.01 MATERIALS

A. Category 6A Copper Horizontal Balanced Twisted Pair Cabling:

1. General:

a. For use with cameras, VMS, telephones, door controllers, PLCs, Remote I/O and network equipment.

b. Description: 100-ohm, four pair balanced un-shielded twisted pairs 23 AWG solid soft or annealed copper polyolefin insulated conductors covered with a UV resistant jacket, in color readily available from manufacturer, typically gray, blue or white.

c. Listed and labeled by an NRTL acceptable to authorities having jurisdiction as complying with UL 444 and NFPA 70 (Article 800) for Communications, Multipurpose Plenum Rated: Type CMP complying with NFPA 262 (smoke and flame propagation testing) or permitted substitute as defined by the NEC complying with UL 1685 (low smoke) and FT4/IEEE 1202 (flame propagation) testing.

d. Cable outer jacketing to be rated for wet locations and operating temperature -20 deg. C to +90 deg. C.

e. Cables shall be marked as NRTL verified with a minimum of Category 6A rating.

f. Voltage Rating: 300V

g. Fire Resistivity: When required by AHJ per NFPA 130 cable to be 2-hour fire rated complying with UL 2196.

h. The maximum cable length for Category 6A horizontal cable is 295 feet (90m). The maximum distance from the network switch in the communications room to the device or outlet (including patch cords) is 327.8 feet (100m).

i. Design Cat 6A length cable to avoid using PoE extender with 100m length of cable.

2. UTP Cable (Type 1):

a. Comply with latest version of TIA/EIA-568 for performance specifications of Category 6A cables.

b. Comply with ICEA S-102-732-2009 for mechanical properties.

c. The cable shall not incorporate an overall shield.

d. Cable shall meet or exceed the latest version of TIA/EIA-568 permanent link performance characteristics for Category 6A.

3. F/UTP Cable (Type 2):

a. Comply with the latest version of TIA/EIA-568 for performance specifications of Category 6A screened (shielded) cables.

b. Comply with ICEA S-102-732-2009 for mechanical properties.

c. The cable shall incorporate an overall helical or longitudinal plastic and metal laminated tape foil shield with 26 AWG minimum drain wire in contact with metal side of tape.

d. Cable shall meet or exceed the latest version of TIA/EIA-568 permanent link performance characteristics for Category 6A (screened).

B. Tray Cables:

1. Cables installed in trays shall be TC rated for such application. The cables shall be installed in accordance with the requirements of NFPA 70 (Article 396).

2. All cables traversing more than 50 feet in a room not installed in an enclosed raceway shall be of low smoke zero halogen (LSZH) construction.

2.02 MANUFACTURED PRODUCTS

A. Cable Tray:

1. Provide cable tray in accordance with Section 26 05 33 - Raceway, Boxes, Hangers and Supports for Electrical Systems.

2. Communications room cable tray size: 24 inches width; 6 inches depth

3. Communications room cable tray to be of the ladder type with 6 inches rung spacing.

B. Identification Tags:

1. Material: Plastic, heat-shrinkable radiation cross-linked, thermally stabilized, flame-retarded modified polyolefin sleeves.

2. Label: List device or terminal block destination and origin, and cable number.

3. Comply with TIA/EIA-606-A and UL 969 for labeling materials, including label stocks, laminating adhesives, and inks used by label printers.

4. Sleeves: Smear resistant prior to shrinking, achieve mark permanency when shrunk without the need for permatizing equipment, or when standard ballpoint pens or high-carbon content fabric ribbons are used.

5. Chemical Resistance: Resistant to common industrial fluids including but not limited to; Freon TF, isopropyl alcohol, and Ethylene Glycol.

C. Category 6A Horizontal Cable Hardware:

1. Manufacturers: Subject to compliance with requirements, provide products by one of the following:

a. ADC.

b. American Technology Systems Industries, Inc.

c. Belden Inc.

d. Dynacom, Inc.

e. Hubbell Premise Wiring.

f. Leviton Commercial Networks Division.

g. Molex Premise Networks; a division of Molex, Inc.

h. Panduit Corp.

i. Siemon Co. (The).

j. Tyco Electronics Corporation; AMP Products.

k. Or Approved Equal.

. General Requirements for Cable Connecting Hardware:

A. Comply with the latest version of TIA/EIA-568, IDC type, with modules designed for punch-down caps or tools. Cables shall be terminated with connecting hardware of same category or higher. All field-terminated and pre-terminated plugs and jacks must be wired using the T568B wiring standard. T568A is not allowed:

1. Connecting Blocks:

a. 110-style IDC for Category 6A. Provide blocks for the number of cables terminated on the block, plus 50 percent spare. Integral with connector bodies, including plugs and jacks where indicated.

2. Cross-Connect:

a. Modular array of connecting blocks arranged to terminate backbone cables and permit interconnection between cables.

1) Number of Terminals per Field: One for each conductor in assigned cables.

3. Patch Panel:

a. Rack or surface mount modular panels housing multiple-numbered jack units with IDC-type connectors at each jack for permanent termination of pair groups of installed cables:

1) Number of Jacks per Field: One for each four-pair conductor group of indicated cables, plus spares and blank positions adequate to suit specified expansion criteria.

4. Jacks and Jack Assemblies:

a. Modular, color-coded, eight-position modular receptacle units with integral IDC-type terminals.

5. Patch Cords:

a. Factory-made, four-pair cables in 900 mm lengths; terminated with eight-position modular plug at each end.

1) Employ unshielded patch cords for both UTP and F/UTP connections.

2) Patch cords shall have bend-relief-compliant boots and color-coded icons to ensure Category 6A performance. Patch cords shall have latch guards to protect against snagging.

3) Patch cords shall have color-coded boots for circuit identification.

B. Telecommunications Outlet/Connectors:

1. Jacks: 100-ohm, balanced, twisted-pair connector; four-pair, eight-position modular. Comply with the latest version of TIA/EIA-568.

2. Workstation Outlets: Two-port-connector assemblies mounted in multigang faceplate:

a. Plastic Faceplate: High-impact plastic.

b. Metal Faceplate: Brass.

c. For use with snap-in jacks accommodating UTP work area cords:

1) Flush mounting jacks, positioning the cord at a 45-degree angle.

d. Legend: Factory labeled by silk-screening or engraving for brass.

e. Legend: Machine printed, in the field, using adhesive-tape label.

f. Legend: Snap-in, clear-label covers and machine-printed paper inserts.

C. Spare Parts:

1. Provide Spare Parts as required by ST Requirement 301 Communication Systems Infrastructure.

PART 3 - EXECUTION

3.01 INSTALLATION

A. Install all copper horizontal cabling in accordance with BICSI ITSIMM standards and as shown on installation drawings.

B. Material and workmanship shall be of the highest quality assuring durability for minimum life expectancy 5 years of Cat6A.

C. Wires and cables shall be continuous without splices between junction boxes, terminals, pull boxes, manholes and hand holes.

D. Bend Radius: Minimum 10 times the diameter of the cable or manufacturers' recommended minimum bending radius, but not less than the radii specified in the BICSI ITSIMM “Cabling Terminations Practices” chapter.

E. Notify Resident Engineer 48 hours prior to installing cables.

F. Install cable in accordance with submitted, and Sound Transit approved, installation plan, and with service loop excess at ends of cable for maintenance and free movement of attached communications equipment.

G. Provide installation hardware to route, support, terminate, and protect cable installation.

H. Provide conduit to connect Sound Transit furnished raceways to equipment, enclosures, and devices.

I. Use lubrication when pulling cables into conduit, pipe, or duct bank.

J. Pulling cable: Comply with BICSI ITSIMM Chapter 4 “Pulling Cable”. Monitor cable pulling tensions.

K. Sealing:

1. Seal cable entrance openings in equipment enclosures, rooms, and junction boxes with either a compression type fitting or pliable sealing compound after the cable is in place.

2. Use sealing compound seal area around cable where cable emerges from conduit, pipe or duct bank.

3. Sealing in accordance with NFPA 130 where required.

L. Installation in Conduit or Pipe:

1. Inspect, mandrel, swab, and clean conduits and ensure a clean, smooth, concentric interior surface prior to cable installation.

2. Clean manholes and determine location of pulling eyes prior to cable installation.

3. Avoid crossover of cables while pulling cables.

4. Do not pull tight or kink cables in conduit fittings or boxes.

5. Pull cables to be installed in a single conduit simultaneously.

6. Fit conduit ends with plastic bell ends.

M. Modifications to communications room including installation of cable in conduits shall preserve room seal after cable installation.

N. Cable Shields:

1. Install cable shields electrically continuous between terminations on terminal blocks.

2. Ground the shield of each cable on the terminal block location at the power source end of the cable only to avoid ground loops.

3. Connect ground wire to ground bus.

O. Separation from EMI Sources:

1. Comply with BICSI TDMM and TIA/EIA-569-C for separating unshielded copper communication cable from potential EMI sources, including electrical power lines and equipment.

2. Separation between open communications cables or cables in nonmetallic raceways and unshielded power conductors and electrical equipment shall be as follows:

a. Electrical Equipment Rating Less Than 2 kVA: A minimum of 5 inches.

b. Electrical Equipment Rating between 2 and 5 kVA: A minimum of 12 inches.

c. Electrical Equipment Rating More Than 5 kVA: A minimum of 24 inches.

3. Separation between communications cables in grounded metallic raceways and unshielded power lines or electrical equipment shall be as follows:

a. Electrical Equipment Rating Less Than 2 kVA: A minimum of 2-1/2 inches.

b. Electrical Equipment Rating between 2 and 5 kVA: A minimum of 6 inches.

c. Electrical Equipment Rating More Than 5 kVA: A minimum of 12 inches.

4. Separation between communications cables in grounded metallic raceways and power lines and electrical equipment located in grounded metallic conduits or enclosures shall be as follows:

a. Electrical Equipment Rating Less Than 2 kVA: No requirement.

b. Electrical Equipment Rating between 2 and 5 kVA: A minimum of 3 inches.

c. Electrical Equipment Rating More Than 5 kVA: A minimum of 6 inches.

5. Separation between Communications Cables and Electrical Motors and Transformers, 5 kVA or HP and Larger: A minimum of 48 inches.

6. Separation between Communications Cables and Fluorescent Fixtures: A minimum of 5 inches.

3.02 TERMINATIONS

A. Terminate all conductors. No cable shall contain unterminated elements, Make terminations at indicated devices, outlets, terminals, cross connects, and patch panels.

B. Observe minimum bending radius when training cables into final position.

C. Provide slack at terminals sufficient for two re-terminations.

D. Provide cable length sufficient to allow access for removal and inspection of equipment.

E. Provide cables continuous, without splices, between terminals within a housing, enclosure, or piece of equipment.

F. Terminate cables in order according to color code.

G. Data Cable Termination: In accordance with the latest version of TIA/EIA-568 and BICSI ITSIMM standards. Contractors must only use the T568B wiring standard or all field terminations and pre-terminated cables provided. T568A is not allowed.

H. Identify individual cable pairs at each cable termination with plastic tags.

I. Terminate and identify spare pairs in each cable.

J. Perform terminations under clean and dry conditions.

K. Install terminals with tools and techniques approved by the terminal manufacturer.

L. Carefully remove cable outer sheath to the point of cable entrance at terminations. At the end of the cable sheath or covering, two layers of plastic electrical tape shall be applied.

M. Do not untwist UTP cables more than 1/2 inch from the point of termination to maintain cable geometry.

3.03 GROUNDING

A. Connect ground wire terminal of each device to grounding conductor.

B. Install grounding according to BICSI TDMM, "Grounding, Bonding, and Electrical Protection" Chapter.

3.04 CABLE IDENTIFICATION

A. Tag cables at the following locations:

1. Termination points, and intermediate x-connect patch points.

2. Where cable enters or exits communications rooms, enclosures, manholes, handholes, and housings.

3. On each side of barriers the cable passes through.

4. Every 3 feet along run of cable in cable troughs.

B. Tag cables per Sound Transit equipment identifier. All conductors, cables, equipment and communications devices shall be named and labeled with Sound Transit's Light Rail Equipment and Facilities Numbering Plan.

3.05 REPAIR

A. Replace all cables damaged during installation.

3.06 PROTECTION

A. Provide appropriate special protection for cables in areas where cables are unavoidably exposed to hazardous conditions such as vibration or sharp corners on equipment.

END OF SECTION

SECTION 27 17 00

TESTING OF COMMUNICATIONS COPPER HORIZONTAL CABLING

PART 1 - GENERAL

1.01 SUMMARY

A. Section includes:

1. Requirements for providing all labor, materials, and tools, field-test instruments and equipment required for the complete testing, documenting and administration of the work called for in the Contract Documents:

a. In order to conform to the overall project event schedule, the cabling contractor shall survey the work areas and coordinate cabling testing with other applicable trades.

b. In addition to the tests detailed in this document, the contractor shall notify Sound Transit or Sound Transit's representative of any additional tests that are deemed necessary to guarantee a fully functional system. The contractor shall carry out and record any additional measurement results at no additional charge.

2. Requirements for the test certification, identification, and administration of copper horizontal balanced twisted pair cabling.

3. Requirements for:

a. Copper cabling test instruments.

b. Copper cabling testing.

~~c.~~ Test results documentation

1.02 REFERENCES

A. This Section incorporates Reference the latest revisions of the following documents:

1. Building Industry Consulting Service International (BISCI):

a. BICSI Telecommunications Distribution Methods Manual (TDMM), 13th Edition.

2. International Organization for Standards (ISO):

a. ISO 2859-1 Sampling Procedures for Inspection.

3. Telecommunications Industry Association Electronic Industries Alliance (TIA/EIA):

a. TIA/EIA-1152, Requirements for Field Test Instruments and Measurements for Balanced Twisted-Pair Cabling.

b. TIA/EIA-568-0.D, Generic Telecommunications Cabling for Customer Premises.

c. TIA/EIA-568-1.D, Commercial Building Telecommunications Cabling Standard.

d. TIA/EIA-568-C.2, Balanced Twisted-Pair Telecommunications Cabling and Components Standards.

1.03 SUBMITTALS

A. Submit:

1. Submit documents in accordance with 01 95 00 - System Integration Requirements.

2. Manufacturers catalog sheets and specifications for the test equipment, including calibration records.

3. A schedule (list) of all balanced twisted-pair copper links to be tested. Including:

a. Complete cable description.

b. Lot, batch, reel ID.

c. Physical and electrical properties (cross referenced by cable ID).

4. Test Reports:

a. Sample test reports (prior to testing).

b. Final test result reports (hardcopy and electronic format) to be delivered to Resident Engineer within two days of testing.

c. Administration of the documentation shall include test results of each Permanent Link.

d. The test result information for each link shall be recorded in the memory of the field-test instrument upon completion of the test.

e. Documentation for each measurement shall be printed in summary report formatted per BICSI TDMM Table 10.1 and transferred from the test instrument and transferred to computer or portable electronic media from which test report shall be printed and submitted.

B. Transmit Employee Qualifications:

1. Training Certificates.

1.04 QUALITY ASSURANCE

A. TESTING

1. All testing procedures and field-test instruments shall comply with applicable requirements of:

a. TIA/EIA-1152, Requirements for Field Test Instruments and Measurements for Balanced Twisted-Pair Cabling.

b. TIA/EIA-568-0.D, Generic Telecommunications Cabling for Customer Premises.

c. TIA/EIA-568-1.D, Commercial Building Telecommunications Cabling Standard.

d. TIA/EIA-568-C.2, Balanced Twisted-Pair Telecommunications Cabling and Components Standards.

2. Testing Types:

a. Unless otherwise waived by Sound Transit or Sound Transit's representative, each shall be in tested for:

1) Wire Map.

2) Length.

3) Propagation Delay.

4) Delay Skew.

5) DC Loop Resistance.

6) DC Resistance Unbalance within a pair.

7) DC Resistance Unbalance between pairs.

8) Insertion Loss.

9) NEXT (Near-End Crosstalk).

10) PS NEXT (Power Sum Near-End Crosstalk).

11) ACR-N (Attenuation to Crosstalk Ratio Near-End).

12) PS ACR-N (Power Sum Attenuation to Crosstalk Ratio Near-End).

13) ACR-F (Attenuation to Crosstalk Ratio Far-End).

14) PS ACR-F (Power Sum Attenuation to Crosstalk Ratio Far-End).

15) Return Loss.

16) TCL (Transverse Conversion Loss).

17) ELTCTL (Equal Level Transverse Conversion Transfer Loss).

b. The following extended test parameters pertain only to Category 6A cables and above:

1) PS ANEXT (Power Sum Alien Near-End Crosstalk) – sampled per Article 3.02, herein.

2) Average PS ANEXT (Average Power Sum Alien Near-End Crosstalk) – sampled per Article 3.02, herein.

3) PS AACR-F (Power Sum Alien Attenuation to Crosstalk Ratio Far-End) – sampled per Article 3.02, herein.

4) Average PS AACR-F (Average Power Sum Alien Attenuation to Crosstalk Ratio Far-End) – sampled per Article 3.02, herein.

3. Acceptance of the test results shall be given in writing after the project is fully completed and tested in accordance with Contract Documents and to the satisfaction of Sound Transit.

B. Trained technicians who have successfully attended an appropriate training program and have obtained a certificate as proof thereof shall execute the tests. Sound Transit requires a copy of the certificates. These certificates may have been issued by any of the following organizations or an equivalent organization:

1. Manufacturer of the connectors or cable.

2. Manufacturer of the test equipment used for the field certification.

3. Training organizations (e.g., BICSI, A Telecommunications Association headquarters in Tampa, Florida; ACP [Association of Cabling Professionals™] Cabling Business Institute located in Dallas, Texas)

C. Sound Transit or Sound Transit's representative shall be invited to witness and/or review field-testing. Sound Transit or Sound Transit's representative shall be notified of the start date of the testing phase five business days before testing commences.

PART 2 - PRODUCTS

2.01 EQUIPMENT

A. Balanced Twisted-Pair Cable Testers:

1. The field-test instrument shall be within a 12 month calibration period.

B. Certification tester:

1. Accuracy:

a. Level III (Category 6 and below) or IIIe (Category 6A and above) accuracy in accordance with ANSI/TIA-1152-A.

b. Test verification of accuracy shall be provided.

2. Permanent Link Adapters:

a. RJ45 plug must meet the requirements for NEXT, FEXT and Return Loss in accordance with ANSI/TIA-568-C.2 Annex C.

b. Twisted pair Category 5e, 6, 6A, 7 or 7A cords are not permitted as their performance degrades with use and can cause false Return Loss failures.

3. Results Storage:

a. Must be capable of storing > 10,000 results for all measurements found below.

4. Measurement capabilities:

a. Wire Map.

b. Length.

c. Propagation Delay.

d. Delay Skew.

e. DC Loop Resistance.

f. DC Resistance Unbalance within a pair.

g. DC Resistance Unbalance between pairs.

h. Insertion Loss.

i. NEXT (Near-End Crosstalk).

j. PS NEXT (Power Sum Near-End Crosstalk).

k. ACR-N (Attenuation to Crosstalk Ratio Near-End).

l. PS ACR-N (Power Sum Attenuation to Crosstalk Ratio Near-End).

m. ACR-F (Attenuation to Crosstalk Ratio Far-End).

n. PS ACR-F (Power Sum Attenuation to Crosstalk Ratio Far-End).

o. Return Loss.

p. TCL (Transverse Conversion Loss).

q. ELTCTL (Equal Level Transverse Conversion Transfer Loss).

r. Time Domain Reflectometer.

s. Time Domain Xtalk Analyzer.

t. PS ANEXT (Power Sum Alien Near-End Crosstalk).

u. Average PS ANEXT (Average Power Sum Alien Near-End Crosstalk).

v. PS AACR-F (Power Sum Alien Attenuation to Crosstalk Ratio Far-End).

w. Average PS AACR-F (Average Power Sum Alien Attenuation to Crosstalk Ratio Far-End).

C. PC Tester Software shall be:

a. Compatible with tester.

b. Capable of saving test results as open format text files.

PART 3 - EXECUTION

3.01 PREPARATION

A. All outlets, cables, patch panels and associated components shall be fully assembled and labeled prior to field-testing. Any testing performed on incomplete systems shall be redone on completion of the work. Test cables after termination but before cross connection.

3.02 BALANCED TWISTED PAIR CABLE TESTING

A. General:

1. Field-test instruments shall have the latest firmware installed.

2. Permanent Link test results, including the individual frequency measurements from the tester, shall be recorded in the test instrument upon completion of each test for subsequent uploading to PC software in which the administrative documentation (reports) may be generated.

3. Permanent Link testing shall be performed on each cabling segment (connector to connector). Sampling is not acceptable.

4. Requirements for Category 6A cables and above only.

B. Alien Crosstalk testing shall be performed using a sampling plan. An acceptance quality level (AQL) of 0,4 percent , normal inspection, general inspection level I as defined in ISO 2859-1 for populations of up to 500,000 links shall be used:

1. The following table represents this sampling level:

Total number of links (N)	**Sample size (No. of links to test)**
3 – 33	3 or 0.1 x N(whichever is greatest)
34 – 3,200	33
3,201 – 35,000	126
35,001 – 150,000	201
150,001 – 500,000	315

C. Disturbed (Victim) links chosen for Alien Crosstalk testing shall be an equal combination of short, medium, and long links.

D. Permanent Link adapters made from twisted pair Category 5e, 6, 6A, 7 or 7A cords are not permitted as their performance degrades with use and can cause false Return Loss failures.

E. The installer shall build Permanent Link. All components shall be anchored so it is not possible to disturb them. The technician is to conduct a Permanent Link test for each type of cabling being tested each day to ensure no degradation of the tester or its Permanent Link adapters.

F. Wire Map Measurement:

1. The wire map shall verify pin-to-pin termination at each end and check for installation connectivity errors.

2. For each of the eight conductors in the cabling, the wire map shall indicate:

a. Continuity to the remote end.

b. Shorts between any two or more conductors.

c. Reversed pairs.

d. Split pairs.

e. Transposed pairs.

f. Distance to open on shield.

g. Any other miss-wiring.

3. The correct connectivity of telecommunications outlets/connectors is defined in TIA/EIA-568-C.2. Two color schemes are permitted. The user shall define which scheme is to be used. The field tester shall document which color scheme was used; T568A or T568B.

G. Length Measurement:

1. The length of each balanced twisted pair shall be recorded.

2. Since physical length is determined from electrical length, the physical length of the link calculated using the pair with the shortest electrical delay shall be reported and used for making the pass or fail determination.

3. Under Sound Transit standards for a Permanent Link, the length measurement can be no more than 295 ft. (90m) before a fail is reported.

H. Propagation Delay measurement:

1. Is the time it takes for a signal to reach the end of the link.

2. The measurement shall be made at 10 MHz per ANSI/TIA-1152.

3. The propagation delay of each balanced twisted pair shall be recorded.

4. Is not to exceed 498 ns per ANSI/TIA-568-C.2 Section 6.3.18.

I. Delay Skew measurement:

1. Is the difference in propagation delay @ 10 MHz between the shortest delay and the delays of the other wire pairs.

2. The delay skew of each balanced twisted pair shall be recorded.

3. Is not to exceed 44 ns per ANSI/TIA-568-C.2 Section 6.3.19.

J. DC Loop Resistance:

1. Often reported as Resistance, is the DC loop resistance of both conductors in the pair.

2. The DC Resistance shall be reported for all four pairs.

3. Is not to exceed 21 Ω for all four pairs per ANSI/TIA-568-C.2 Section 6.3.1.

K. DC Resistance Unbalance within a pair:

1. Is the difference in DC resistance of the two wires within the same pair.

2. The DC Resistance Unbalance within a pair shall be reported for all four pairs.

3. Is not to exceed 200 mΩ or 3 percent whichever is the greatest per ANSI/TIA-568-C.2 Section 6.2.2.

L. DC Resistance Unbalance between pairs

1. The difference in DC parallel resistance of the conductors of a pair compared to the DC parallel resistance of another pair, given in the formula below:

$$Resistance\_Unbalance_{Between\_pairs} = \left(\frac{|R_{P1} - R_{P2}|}{R_{P1} + R_{P2}} \right) 100\%$$

Where:

R_{P1} is the DC parallel resistance of the conductors of a pair.

R_{P2} is the DC parallel resistance of the conductors of another pair.

2. The DC Resistance Unbalance shall be reported for the following pairs:

a. 1,2-3,6

b. 1,2-4,5

c. 1,2-7,8

d. 3,6-4,5

e. 3,6-7,8

f. 4,5-7,8

3. Is not to exceed 50 mΩ or 7 percent , whichever is the greatest.

M. Insertion Loss:

1. Is the loss of signal strength over the cabling (in dB).

2. The frequency resolution shall be:

a. 1 – 31.25 MHz: 150 kHz.

b. 31.25 – 100 MHz: 250 kHz.

c. 100 – 250 MHz: 500 kHz.

d. 250 – 500 MHz: 1000 kHz.

3. Both worst case and worst margins shall be reported in one direction for all four pairs.

4. Reported margins found to be within the accuracy of the field tester shall be marked with an asterisk (*).

5. Is not to exceed the Permanent Link limits found in ANSI/TIA-568-C.2 Section 6.3.7.

N. NEXT (Near-End Crosstalk):

1. Is the difference in amplitude (in dB) between a transmitted signal and the crosstalk received on other wire pairs at the same end of the cabling.

2. The frequency resolution shall be:

a. 1 – 31.25 MHz: 150 kHz.

b. 31.25 – 100 MHz: 250 kHz.

c. 100 – 250 MHz: 500 kHz.

d. 250 – 500 MHz: 1000 kHz.

3. Both worst case and worst margins shall be reported in both directions for the following pair combinations:

a. 1,2-3,6

b. 1,2-4,5

c. 1,2-7,8

d. 3,6-4,5

e. 3,6-7,8

f. 4,5-7,8

4. Is not to exceed the Permanent Link limits found in ANSI/TIA-568-C.2 Section 6.3.8.

5. Reported margins found to be within the accuracy of the field tester shall be marked with an asterisk (*).

6. The Time Domain Xtalk data shall be stored for any marginal or failing NEXT results.

O. PS NEXT (Power Sum Near-End Crosstalk):

1. Is the difference (in dB) between the test signal and the crosstalk from the other pairs received at the same end of the cabling.

2. The frequency resolution shall be:

a. 1 – 31.25 MHz: 150 kHz.

b. 31.25 – 100 MHz: 250 kHz.

c. 100 – 250 MHz: 500 kHz.

d. 250 – 500 MHz: 1000 kHz.

3. Both worst case and worst margins shall be reported in both directions for all four pairs.

4. Is not to exceed the Permanent Link limits found in ANSI/TIA-568-C.2 Section 6.3.9.

5. Reported margins found to be within the accuracy of the field tester shall be marked with an asterisk (*).

6. The Time Domain Xtalk data shall be stored for any marginal or failing PS NEXT results.

P. ACR-N (Attenuation Crosstalk Ratio Near-End):

1. Is a calculation of NEXT minus Insertion Loss of the disturbed pair in dB.

2. The frequency resolution shall be:

a. 1 – 31.25 MHz: 150 kHz.

b. 31.25 – 100 MHz: 250 kHz.

c. 100 – 250 MHz: 500 kHz.

d. 250 – 500 MHz: 1000 kHz.

3. Both worst case and worst margins shall be reported in both directions for the following pairs:

a. 1,2-3,6

b. 1,2-4,5

c. 1,2-7,8

d. 3,6-4,5

e. 3,6-7,8

f. 4,5-7,8

4. Although not specified in ANSI/TIA-568-C.2, it shall be recorded for all twelve possible combinations.

Q. PS ACR-N (Power Sum Attenuation Crosstalk Ratio Near-End):

1. Is a calculation of PS NEXT minus Insertion Loss of the disturbed pair in dB.

2. The frequency resolution shall be:

a. 1 – 31.25 MHz: 150 kHz.

b. 31.25 – 100 MHz: 250 kHz.

c. 100 – 250 MHz: 500 kHz.

d. 250 – 500 MHz: 1000 kHz.

3. Both worst case and worst margins shall be reported in both directions for all four pairs.

4. Although not specified in ANSI/TIA-568-C.2, it shall be recorded for all eight possible combinations.

R. ACR-F (Attenuation Crosstalk Ratio Far-End):

1. Is a calculation of FEXT minus Insertion Loss of the disturbed pair in dB.

2. The frequency resolution shall be:

a. 1 – 31.25 MHz: 150 kHz.

b. 31.25 – 100 MHz: 250 kHz.

c. 100 – 250 MHz: 500 kHz.

d. 250 – 500 MHz: 1000 kHz.

3. Both worst case and worst margins shall be reported in both directions for the following pairs:

a. 1,2-3,6

b. 1,2-4,5

c. 1,2-7,8

d. 3,6-1,2

e. 3,6-4,5

f. 3,6-7,8

g. 4,5-1,2

h. 4,5-3,6

i. 4,5-7,8

j. 7,8-1,2

k. 7,8-3,6

l. 7,8-4,5

4. Is not to exceed the Permanent Link limits found in ANSI/TIA-568-C.2 Section 6.3.11.

5. Reported margins found to be within the accuracy of the field tester shall be marked with an asterisk (*).

S. PS ACR-F (Power Sum Attenuation to Crosstalk Ratio Far-End):

1. Is a calculation of PS FEXT minus Insertion Loss of the disturbed pair in dB.

2. The frequency resolution shall be:

a. 1 – 31.25 MHz: 150 kHz.

b. 31.25 – 100 MHz: 250 kHz.

c. 100 – 250 MHz: 500 kHz.

d. 250 – 500 MHz: 1000 kHz.

3. Both worst case and worst margins shall be reported in both directions for all four pairs.

4. Is not to exceed the Permanent Link limits found in ANSI/TIA-568-C.2 Section 6.3.13.

5. Reported margins found to be within the accuracy of the field tester shall be marked with an asterisk (*).

T. Return Loss:

1. Is the difference (in dB) between the power of a transmitted signal and the power of the signals reflected back.

2. The frequency resolution shall be:

a. 1 – 31.25 MHz: 150 kHz.

b. 31.25 – 100 MHz: 250 kHz.

c. 100 – 250 MHz: 500 kHz.

d. 250 – 500 MHz: 1000 kHz.

3. Both worst case and worst margins shall be reported in both directions for all four pairs.

4. Shall be ignored at all frequencies where the Insertion Loss is less than 3 dB for that pair.

5. Is not to exceed the Permanent Link limits found in ANSI/TIA-568-C.2 Section 6.3.6.

6. Reported margins found to be within the accuracy of the field tester shall be marked with an asterisk (*).

7. The Time Domain Reflectometer data shall be stored for any marginal or failing Return Loss results.

U. TCL (Transverse Conversion Loss):

1. Is the ratio (in dB) between a differential mode signal inject at the near-end and the common-mode signal measured at the near-end on the same wire pair.

2. The frequency resolution shall be:

a. 1 – 31.25 MHz: 150 kHz.

b. 31.25 – 100 MHz: 250 kHz.

c. 100 – 250 MHz: 500 kHz.

d. 250 – 500 MHz: 1000 kHz.

3. Both worst case and worst margins shall be reported in both directions for all four pairs.

4. Is not to exceed the limits found ANSI/TIA-568-C.2 Section 6.2.14.

V. ELTCTL (Equal Level Transverse Conversion Transfer Loss):

1. Is the ratio (in dB) between a differential mode signal inject at the near-end and the common-mode signal measured at the far end on the same wire pair minus the Insertion Loss of that pair.

2. The frequency resolution shall be:

a. 1 – 31.25 MHz: 150 kHz.

b. 31.25 – 100 MHz: 250 kHz.

c. 100 – 250 MHz: 500 kHz.

d. 250 – 500 MHz: 1000 kHz.

3. Both worst case and worst margins shall be reported in both directions for all four pairs.

4. Is not to exceed the limits found in ANSI/TIA-568-C.2 section 6.2.16.

NOTE: Items Y through BB pertain only to Category 6A cables and above:

W. PS ANEXT (Power Sum Alien Near-End Crosstalk):

1. Takes into account the combined alien crosstalk (statistical) on a receive pair from all external near-end disturbers operating simultaneously.

2. The frequency resolution shall be:

a. 1 – 31.25 MHz: 150 kHz.

b. 31.25 – 100 MHz: 250 kHz.

c. 100 – 250 MHz: 500 kHz.

d. 250 – 500 MHz: 1000 kHz.

3. The disturbed (victim) link shall have disturber links to the left and right of it and if present, links above and below it.

4. Disturber cables shall include all links within the same bundle as the disturbed (victim) link and adjacent links.

5. Should be measured in both directions if the link is patch panel to patch panel. If the link is patch panel to telecommunications outlet, then it shall be measured from the patch panel end only.

6. Is not to exceed the Permanent Link limits found in ANSI/TIA-568-C.2 Section 6.3.21.

X. Average PS ANEXT (Power Sum Alien Near-End Crosstalk):

1. Is calculated by averaging the individual PSANEXT loss values, in dB, for all four pairs in the disturbed (victim) link.

2. The frequency resolution shall be:

a. 1 – 31.25 MHz: 150 kHz.

b. 31.25 – 100 MHz: 250 kHz.

c. 100 – 250 MHz: 500 kHz.

d. 250 – 500 MHz: 1000 kHz.

3. Is not to exceed the Permanent Link limits found in ANSI/TIA-568-C.2 Section 6.3.22.

Y. PS AACR-F (Power Sum Alien Attenuation to Crosstalk Ratio Far-End):

1. AFEXT loss is the coupling of crosstalk at the far-end from external link pairs into a disturbed (victim) pair of the 4-pair link under test. PS AACR-F is the calculated power sum from all external pairs into the disturbed (victim) pair.

2. The frequency resolution shall be:

a. 1 – 31.25 MHz: 150 kHz.

b. 31.25 – 100 MHz: 250 kHz.

c. 100 – 250 MHz: 500 kHz.

d. 250 – 500 MHz: 1000 kHz.

3. The disturbed (victim) link shall have disturber links to the left and right of it and if present, links above and below it.

4. Disturber cables shall include all links within the same bundle as the disturbed (victim) link and adjacent links.

5. Should be measured in both directions if the link is patch panel to patch panel. If the link is patch panel to telecommunications outlet, then it shall be measured from the patch panel end only.

6. Is not to exceed the Permanent Link limits found in ANSI/TIA-568-C.2 Section 6.3.25.

Z. Average PS AACR-F (Power Sum Alien Attenuation to Crosstalk Ratio Far-End):

1. Is calculated by averaging the individual PS AACR-F values, in dB, for all four pairs in the disturbed (victim) link.

2. The frequency resolution shall be:

a. 1 – 31.25 MHz: 150 kHz.

b. 31.25 – 100 MHz: 250 kHz.

c. 100 – 250 MHz: 500 kHz.

d. 250 – 500 MHz: 1000 kHz.

3. The disturbed (victim) link shall have disturber links to the left and right of it and if present, links above and below it.

4. Disturber cables shall include all links within the same bundle as the disturbed (victim) link and adjacent links.

5. Should be measured in both directions if the link is patch panel to patch panel. If the link is patch panel to telecommunications outlet, then it shall be measured from the patch panel end only.

6. Is not to exceed the Permanent Link limits found in ANSI/TIA-568-C.2 Section 6.3.26.

3.03 FIELD QUALITY CONTROL

A. All installed cabling Permanent Links shall be field-tested and pass the test requirements and analysis as described in PART 3 - EXECUTION. Any Permanent Link that fails these requirements shall be diagnosed and corrected. Any corrective action that must take place shall be documented and followed with a new test to prove that the corrected Permanent Link meets performance requirements. The final and passing result of the tests for all Permanent Links shall be provided in the test results documentation in accordance with PART 3.

B. Test results documentation:

1. The Permanent Link test results (excluding alien xtalk testing) shall be uploaded to PC software at the end of each working day for inspection by Sound Transit or Sound Transit's representative.

2. Test results uploaded to PC software shall be transferred onto portable electronic media to allow for the maintenance, inspection and archiving of the test records.

3. The database for the complete project, including fiber links, if applicable, shall be stored open format text files and delivered on portable electronic media prior to Sound Transit acceptance. This portable electronic media shall include a copy of PC software to allow the inspection and printing of the test reports in BICSI TDMM Table 10.1 format.

4. Circuit IDs reported by the test instrument should match the specified label ID.

5. For Permanent Link testing, the detailed test results documentation data is to be provided in PC software, hardcopy and open format text files for each tested balance twisted-pair and shall contain the following information:

   a. The overall Pass/Fail evaluation of the link-under-test.

   b. The date and time the test results were saved in the memory of the tester.

   c. The identification of the customer site as specified by the end-user.

   d. The name of the test limit selected to execute the stored test results.

   e. The name of the personnel performing the test.

   f. The version of the test firmware and the version of the test limit database held within the test instrument.

   g. The manufacturer, model and serial number of the field-test instrument.

   h. The adapters used.

   i. The factory calibration date.

   j. Wire Map.

   k. Propagation Delay values, for all four pairs.

   l. Delay Skew values, for all four pairs.

   m. DC Resistance values, for all four pairs.

   n. DC Resistance Unbalance within a pair, values for all four pairs.

   o. DC Resistance Unbalance between pairs, values for all four pairs.

   p. Insertion Loss, worst case values for all four pairs.

   q. NEXT, worst case margin and worst case values, both directions.

   r. PS NEXT, worst case margin and worst case values, both directions.

   s. ACR-N, worst case margin and worst case values, both directions.

   t. PS ACR-N, worst case margin and worst case values, both directions.

   u. ACR-F, worst case margin and worst case values, both directions.

   v. PS ACR-F, worst case margin and worst case values, both directions.

   w. Return Loss, worst case margin and worst case values, both directions.

   x. TCL, worst case margin and worst case values, both directions.

   y. ELTCTL, worst case margin and worst case values, both directions.

   z. Time Domain Crosstalk data if the link is marginal or fails.

   aa. Time Domain Reflectometer data if the link is marginal or fails.

6. For Alien Crosstalk testing, the detailed test results documentation data is to be provided for each tested balance twisted-pair and shall contain the following information:

   a. The overall Pass/Fail evaluation of the link-under-test.

   b. The date and time the measurements were made.

   c. The identification of the customer site as specified by the end-user.

   d. The name of the test limit selected to execute the stored test results.

   e. The name of the personnel performing the test.

   f. The version of the test software.

   g. PS ANEXT, worst case margin for all four pairs.

   h. Average PS ANEXT, worst case margin.

   i. PS AACR-F, worst case margin for all four pairs.

   j. Average PS AACR-F, worst case margin.

END OF SECTION

SECTION 27 21 29

NETWORK SYSTEMS

PART 1 - GENERAL

1.01 SUMMARY

A. Section includes:

1. Requirements for furnishing, installing, and testing of network systems for the Train Control Network (TCN) and Emergency Fan/Fire Life Network (EFN).

2. Coordinate with Sound Transit IT for Network requirements and 3rd party leased line for early opening of the garage or other facilities.

1.02 REFERENCES

A. This Section incorporates by reference the latest revision of the following documents:

1. Institute of Electrical and Electronic Engineers (IEEE):

a. IEEE 802.1 Local and Metropolitan Area Networks – Specific Requirements Part 1: 802 Network Architecture, Interworking among 802 LANs, MANs and other wide area networks, 802 Link Security, Network Management, Protocol layers above MAC & LLC layers.

b. IEEE 802.3 Local and Metropolitan Area Networks - Specific requirements Part 3: Carrier Sense Multiple Access with Collision Detection (CSMA/CD), Access Method and Physical Layer Specifications.

c. IEEE 802.3bt DTE Power via MDI over 4-Pair (4PPoE).

d. IEEE 1588 Precision Clock Synchronization Protocol for Networked Measurement and Control Systems.

2. Underwriters Laboratories (UL):

a. UL 508 Safety requirements for Industrial Control Equipment.

3. Code of Federal Regulations (CFR):

a. FCC Part15-B Regulation regarding unintentionally radiated emissions.

4. International Electrotechnical Commission (IEC):

a. IEC 60068 Environmental Testing.

5. National Fire Alarm and Signaling Code (NFPA):

a. NFPA 72 National Fire Alarm and Signaling Code.

b. NFPA 130 Standard for Fixed Guideway Transit and Passenger Rail Systems.

c. NFPA 1221 Standard for the Installation, Maintenance, and Use of Emergency Services Communications Systems.

6. International Telecommunications Union (ITU):

a. ITU-T Y.1564 Ethernet service activation test methodology.

1.03 SUBMITTALS

A. Submit:

1. Preliminary Design Plan:

a. Submit system architecture to support Contractor provided subsystems.

b. Switch port requirements for each switch.

c. Preliminary optical loss budget calculations for each link span between network switches.

d. Manufacturer's specifications and Product Data for equipment to be provided. Include switch slot modules and small form-factor pluggable (SFP) optical transceivers. For equipment provided by the Contractor.

e. Equipment List, Drawings, Schematics, Bandwidth Utilization tables, Traffic Engineering, Network Security, and IP address schema. IP address schema to be developed based on overall Sound Transit Network address requirements to be provided by Sound Transit.

f. Drawings:

1) Network Topology Diagram: Show network device connections.

2) Equipment riser diagram.

3) Point to Point wiring detail.

4) Power, Alarm, and Grounding schematic drawings: Show power connections, alarm, and grounding for installed network equipment.

5) Equipment Layout Drawings: Include detailed rack and cabinet layouts for each location.

6) Updated Network Switch Schedule for each location and submit to Sound Transit for selection of Network Switch and subsequent configuration.

7) Naming and numbering of devices must follow Sound Transit's latest Light Rail Equipment and Facilities Numbering Plan and must be submitted for Sound Transit's approval.

g. Network equipment tagging scheme including: patch cords, power, alarm, and grounds.

2. Final Design Plan:

a. Update of Preliminary Design Plan to include final configuration data, final drawing updates, and final switch configuration including:

1) Network IP addressing scheme for networked devices.

2) Final equipment and component lists, per node location.

3. Network Device Schedule:

a. Provide a completed Networked Device Schedule for documenting all network connections. Provide the following information as noted “Contractor Input” for each required network device, port, and connected device. Coordinate with ST for information noted “ST Input” to confirm required network equipment and configuration. Coordinate with ST for Information noted in “ST IT/PSO Input”.

b. Device Installation Information (Contractor Input):

1) Installing Contract Number.

2) Facility ID.

3) Station Acronym.

4) Cabinet/Panel ID.

5) Room DC Location.

6) Switch ID.

7) Port #.

8) Number of Ports Required.

9) Number of Ports Provided.

10) Port Type.

11) PoE.

12) PP Port.

13) System.

14) Device Type.

15) Device Name.

16) Service Location.

17) Device Description and Location.

18) Date Needed.

19) Date Installed/Modified.

20) Mounting.

21) Power Requirements.

22) Rugged/non-Rugged.

c. ST IT Input:

1) Switch Model.

2) Power Supply Model.

3) Switch Manufacturer.

4) MAC Address.

5) Serial Number.

6) Asset Tag.

7) SFP Type.

8) Comment.

d. ST IT/PSO Input:

1) VLAN.

2) IP Address.

3) Subnet Mask.

4) Default Gateway.

5) Soft Port(s) – Optional.

e. Provide the Networked Device Schedule as an editable Microsoft Excel file. Sound Transit will provide a template file for the schedule.

4. Network Installation Plan:

a. Installation plan for each location. This procedure must be prepared based on Contractor's review of the installation location, and field site survey (Site Verification). Include equipment installation, and information for cabling and wiring connections.

b. Provide installation verification checklist to Resident Engineer for approval.

5. Test Documents:

a. Testing documents in accordance with Sound Transit Commissioning Requirements.

b. Factory Acceptance Testing (FAT) procedure for approval detailing Network equipment functions, configurations, settings, and equipment selections in accordance with requirements in this specification.

c. Test procedures and test results for factory testing, and for each test as part of network installation.

d. Site Acceptance Testing (SAT) procedure for approval detailing Network equipment functions, configurations, settings, troubleshooting procedures and equipment selections in accordance with requirements in this specification.

6. Record Documentation:

   a. Supply final As-Built Drawings that include System Architecture, detailed Network schematics, and detailed installation drawings for Communication Network Equipment. These drawings must be an image of what is installed in the field by the final completion date. Redlines and updated IFC drawings are not acceptable. The drawings must meet ST CAD standards.

   b. Supply complete Network System Configuration documentation, indicating network equipment configuration settings, Internet Protocol (IP) address scheme, Virtual Local Area Network (VLAN) configuration, and quality of service assignments. Provide as formatted Excel document, in version to be approved by Resident Engineer.

   c. Supply a complete testing documentation following the Service performance test report format described in ITU Y.1564

7. System Support:

   a. Copies of manufacturer support and warranty agreements for equipment, software, and systems provided. Provide contact information for equipment and software manufacturers in accordance with delivered support and warranty agreements.

   b. Operating and Maintenance instructions, Operation and Maintenance (O&M) Manuals for each system provided and a Renewal Parts Catalog.

8. Maintenance Personnel Training:

   a. Training plan for ST or KCM employees tasked with the system maintenance, including any presentation slides used in personnel training. ST intends recording the training sessions for future training.

9. Spare parts:

   a. The contractor must furnish and deliver the following new elements to esident Engineer:

      1) Five of each type of Ethernet Extenders; Ten sets of each type of ancillary network mounting products (including rack hardware, etc.).

      2) Ten patch cables of each type (length, color, category rating, etc.) provided on the project.

1.04 QUALITY ASSURANCE

A. Network Contractor Qualifications:

1. Network systems work requires that the specifications request dedicated IT network engineers and technicians with specialized knowledge and training.

2. Network Contractors must be certified by the network equipment manufacturer for the network equipment provided.

B. Network Engineer:

1. The Network Engineer must be associated with all phases of planning, designing, network integration, cut-over supervision, testing, and deployment of the Communications networks.

2. The Network Engineer must act as a single point of contact with the Resident Engineer.

3. The Network Engineer must have a minimum of 10 years of hands-on professional experience and proven knowledge of network technologies including Fiber Optic, Ethernet and IP Communications systems. This must include design of network systems and providing comprehensive system engineering and integration services, on a turnkey basis.

4. Proper procedures for assessing the network personnel performance must be defined with alternatives for replacing personnel that has been found unable or unqualified to perform their duties.

PART 2 - PRODUCTS

2.01 GENERAL

A. Train Control Network (TCN) and Emergency Fan/Fire Life Network (EFN):

1. Sound Transit will furnish and configure all EFN and TCN network switches for this Contract in accordance with the contractor provided network design. The Contractor must provide end device network requirements and coordinate with Sound Transit to ensure the Contractor's work complements that of Sound Transit to deliver a fully integrated solution as shown in the Issued for Construction Drawings.

2. The network equipment information must be provided to esident Engineer with enough time for purchase, delivery and configuration and testing before the equipment is required for any other purpose.

3. Sound Transit will provide Network switches in accordance with approved Sound Transit vendor list of switch equipment. Contractor must determine switch equipment port quantities per tunnel and station device network requirements. This must include providing switch requirements, installation, and testing.

2.02 TCN/EFN ETHERNET NETWORK DEVICES

A. ST wants to build a network based on open standards. Proprietary implementations must be avoided.

B. In general, any network device must support:

1. Technology:

a. Standards IEEE 802.3 for 10BaseT.

b. IEEE 802.3u for 100BaseT(X) and 100BaseFX.

c. IEEE 802.3ab for 1000BaseT(X).

d. IEEE 802.3z for 1000BaseSX/LX/LHX/ZX.

e. IEEE 802.3ae for 10 Gigabit Ethernet.

f. IEEE 802.3af/bt for PoE/PoE+/4PPoE output.

g. IEEE 802.3x for Flow Control.

h. IEEE 802.1D-2004 for Spanning Tree Protocol.

i. IEEE 802.1w for Rapid Spanning Tree Protocol.

j. IEEE 802.1s for Multiple Spanning Tree Protocol.

k. IEEE 802.1Q for VLAN Tagging.

l. IEEE 802.1p for Class of Service.

m. IEEE 802.1X for Authentication.

n. IEEE 802.3ad for Port Trunk with LACP.

2. Software Features:

a. IPv4 and IPv6 support, in and out of band management, SNMP v2 or later, LLDP, Port Mirror, DDM, RMON, DHCP Server/Client, DHCP Option 66/67/82, SSH, BootP, TFTP, SMTP, RARP, Syslog, SNMP Inform, Flow Control, Back Pressure Flow Control.

b. Filter 802.1Q VLAN, Q-in-Q VLAN, GVRP, IGMP v1/v2/v3, GMRP.

c. Redundancy Protocols STP, RSTP, MSTP, Link Aggregation.

d. Security RADIUS, TACACS+, SSL, SSH, Broadcast Storm Protection, Port Lock, Access Control Lists.

e. Unicast Routing Static Routing, RIPV2, OSPF, BGP.

f. Multicast Routing DVMRP, PIM-DM, PIM-SM, PIM-SSM.

g. Time Management SNTP, NTP Server/Client, IEEE 1588v2 PTP.

h. Industrial Protocols EtherNet/IP, Modbus/TCP support.

i. MIB MIB-II, Ethernet-like MIB, P-BRIDGE MIB, Q-BRIDGE MIB, Bridge MIB, RSTP MIB, RMON MIB Groups 1, 2, 3, 9.

j. Routing Redundancy VRRP.

C. Core Network: The specification must require high-traffic/High-availability network switches based on:

1. A traffic estimation study with the required design capacities.

2. Based on the study mentioned above, define the switch brand and mode required to meet the capacity.

3. Provide at least 50 percent spare fabric traffic capacity.

4. Ability for redundant power supplies and easy fan replacement.

5. Layer 3 licenses included.

6. OSPF and BGP support.

7. MPLS and VPLS support.

8. IPv6 support.

9. High capacity host zSFP+ interface.

10. 10/100Mpbs, 1Gps, 10Gbps Ethernet interfaces.

D. Distribution Layer: The specification must require at each station redundant high-capacity router/switches with the following features:

1. Redundant power supplies.

2. Layer 3 licenses included.

3. OSPF and BGP capable.

4. IPv6 capable.

5. Provide at least 50 percent spare fabric traffic capacity.

6. High capacity host zSFP+ interface.

7. 10/100Mpbs, 1Gps Ethernet interfaces.

E. Access layer: The specification must require all access layer switches to meet industrial grade devices, intended for harsh environment operation with at least the following features:

1. Redundant power supplies.

2. Layer 3 licenses included.

3. IPv6 capable.

4. Provide at least 30 percent spare fabric traffic capacity.

5. At least 4 host zSFP+ interfaces.

6. 10/100Mpbs, 1Gps Ethernet interfaces.

7. Provide at least 50 percent 802.3bt (4PPoE) ports with backwards compatibility.

F. Small Form-factor Pluggable Transceiver: The specification must require the use of SFP modules for optical network interconnecting, they must offer the following features:

1. Brand independent modules.

2. SFP/SFP+/zSFP+ option availability.

3. Ability to use different fiber optic types with different module models.

4. Real-time testing and diagnostics.

5. Hot swappable.

6. Single strand bidirectional link support.

G. EFN Specific devices requirements: EFN devices require industrial ratings for all its components, therefore require the following features:

1. At least Ingress Protection 66 rating.

2. Hot-swappable redundant power supplies.

3. Layer 3 licenses included.

4. OSPF and BGP capable.

5. IPv6 capable.

6. Provide at least 50 percent spare fabric traffic capacity.

7. High capacity host zSFP+ interface.

8. 10/100Mpbs, 1Gps Ethernet interfaces.

9. Fanless, -10 to 60°C operating temperature range.

10. At least 50 percent 802.3bt (4PPoE) ports with backwards compatibility.

H. Network Management: All network devices must be remotely manageable using SNMP v3 or higher, with MIB II support. The specification must require the devices to be managed with the current Sound Transit supported SNMP manager and provide the required licenses to support the new devices.

I. Network synchronization: All network devices must be able to synchronize with Master Clock, using IEEE 1588v2 protocol. If the network is isolated and/or an existing clock is not available, the specification must include a local GPS synchronized clock. NTP/SNTP is not acceptable.

J. IP Addressing scheme: Develop with Sound Transit concurrence the IP Scheme to be used. ST is interested in migration towards an IPv6 addressing scheme so the specifications must allow an IPv4 implementation but must require a path to IPv6.

K. VLAN Configuration: All VLANs must be in accordance with ST defined VLAN structure. Network devices must support 802.1Q.

L. Quality of Service (QoS): Data transmitted over the TCN/EFN must have Quality of Service (QoS) requirements in accordance with QoS as configured by Sound Transit.

PART 3 - EXECUTION

3.01 GENERAL

A. All work must be completed in a professional manner to implement complete and functional systems or subsystems as specified. All installation and related activities must be coordinated through the Resident Engineer and performed in accordance with all site access and work hour restrictions specified.

B. Install required power supplies, cabling, conduit, connectors, patch cords, and all other miscellaneous items required for a fully functional network.

C. Equipment cabinets, router, switches, cable managements and other ancillary equipment may be located within reasonable limits as necessary to avoid conflicts with light fixtures, structural elements, ductwork, and other equipment mounted in stations.

D. The network contractor must coordinate conduit and cable routing and all installation details with other trades and disciplines and make all required interconnection wiring at the OMF, stations, cars and other locations specified.

E. All equipment not suitable for 19 inch rack mounting must be installed in a DIN-rail with an adapting bracket.

F. IP Addressing must be assigned per ST's IP schema and within the ST provided IP Addressing ranges. IP addressing is assigned by network, location, system, and instance. For locations outside of defined stations or facilities, assign IP addressing based on the where the end device is network from or where the data will be routed from.

G. Once the network is installed, the contractor must perform the following tests:

1. Bandwidth testing in accordance with ITU-T Y.1564 Ethernet service activation test methodology for both pre-system and post-system installation.

2. Contractor must provide support to Sound Transit IT during Systems Integration Testing (SIT) 501 once connection to Sound Transit's backbone Network is established.

END OF SECTION

SECTION 27 80 00

COMMUNICATIONS RELIABILITY PROGRAM

PART 1 - GENERAL

1.01 SUMMARY

A. Section includes:

1. Requirements for the establishment and maintenance of a Communications System Reliability Program, which must be applied to obtain a valid assessment of the Mean Time Between Failures (MTBF) capabilities of the designated equipment and subsystems furnished under this Contract. This program must include:

a. The furnishing of predicted design reliabilities.

b. Field reliability testing.

c. Continual comparisons of field reliability testing.

d. All corrective measures required to obtain satisfactory performance.

B. The subsystems to be tested for system reliability compliance must consist of:

1. Emergency and Passenger Telephone System.

2. Passenger Information Systems (Includes Public Address and Variable Messaging Systems).

3. Closed Circuit Television System.

4. Access Control System.

5. Fare Systems.

6. Network.

7. SCADA.

8. Radio System.

9. Building Management System.

10. Train Control System.

11. Emergency Ventilation System.

C. The Contractor will be permitted to submit reliability data previously acquired from similar equipment and subsystems for predicted reliabilities. If equipment selected is identical to equipment used within the existing Sound Transit operating system, the requirements herein can be waived upon written acceptance from the Resident Engineer. The contractor must submit this request in writing with the specifics of the equipment and where used on the existing Sound Transit system.

D. Field reliability testing must be on a subsystem basis with the subsystem as defined above. The Contractor must initiate the field reliability testing at Substantial Completion. The testing duration must be one year. If Chargeable Failures have accumulated to the extent that the requirements for MTBF for the sub-system cannot be met the demonstration period must be extended in order to obtain the cycles/mean time between failure thresholds specified herein. The calculation must include the full testing duration needed to obtain the MTBF requirement. In the event demonstration period extends beyond Acceptance the Sound Transit designated personnel must maintain equipment and collect field reliability data. The Contractor must coordinate data collection with Sound Transit personnel.

1.02 REFERENCES

A. Definitions:

B. The following definitions apply specifically to terms used in this Section:

1. Mean Time Between Failure (MTBF): The average time that the subsystem will operate without a chargeable failure:

$$\text{MTBF} = \frac{\text{operating time}}{\text{number of chargeable failures}}$$

2. Minimum MTBF (MMTBF): The value specified in the Table of Reliability Requirements by Sound Transit for minimum performance without rejection.

C. Chargeable Failure:

1. All failures which require repair or replacement of contractor provided components or parts are chargeable unless specified otherwise herein, or unless determined by Sound Transit to be caused by a condition external to the equipment under test. Failure due to workmanship deficiencies must be counted as chargeable. Transient failures when proven to be caused by a single condition must be counted only as a single failure. Also, transient conditions which temporarily prevent a function from being successfully performed must be counted as chargeable failures unless it is shown that they are the result of external influences beyond the requirements of this Specification. Non-Chargeable Failures.

2. Failures which are proven to be the result of conditions exceeding those specified, (i.e., floods, derailments, vandalism, human error not normally protected against, etc.) must be classed as non-chargeable and must not be included in the reliability evaluation. Failure of parts installed or provided by others, i.e. network switches, existing fiber connections, PSERN radio base station, etc., that cause a dependent failure of a subsystem installed by the Contractor must not be included in the reliability evaluation.

D. Failure Rate: The reciprocal of MTBF. For this reliability assessment program, the failure rate is assumed to be constant throughout the life of the equipment.

E. Independent Failure: A failure which will independently cause equipment performance outside of specified limits - one which occurs without being related to the failure of the associated items.

F. Dependent Failure: A failure of a part which is a direct result of an independent failure - one which is caused by the failure of an associated item(s). Dependent failures are non-chargeable failures.

G. Simultaneous Failure :An event in which simultaneous or multiple failures occur and each failed part will independently prevent satisfactory equipment performance. Such failure must be counted as an equipment failure.

1.03 PERFORMANCE REQUIREMENTS

A. Construction of Table Of Reliability Goals:

1. The table of reliability goals includes: MTBF goals for components, which are to be demonstrated through submitted reliability information for the components concerned; MTBF goals for Systems as described in 1.05, are to be demonstrated through theoretical analysis and through Reliability Demonstration Testing of the systems as a whole.

B. MTBF Evaluation Criteria:

1. Acceptance or rejection must be on an individual subsystem basis with the individual subsystems being the line items presented in the Table of Reliability Goals. Accept or reject decisions must be based upon the procedures, formulae, and definitions specified herein. If test results fall short of the specified hours or cycles then the Contractor is required to propose a corrective action acceptable to Sound Transit that may include a redesign or selection of alternative equipment in the subsystem if necessary. An extension of the reliability demonstration test must then restart to prove the corrective action was sufficient. System “Components” are the end devices and standalone devices that make up the system and the “System” is all the devices together required to make the system functional (for example, “components” of the CCTV system are the cameras, NVRs, and other devices provided under the CCTV technical specification. The “System” is all the components and supporting devices and systems required for the system to meet its functional requirements. This would include the mentioned components, headend servers, workstations, network, and other components required to provide the full functional requirements of the system within the scope of the project.

Table of Reliability Goals

ITEM	DESCRIPTION	MTBF Hours
1a.	Emergency and Passenger Telephone Components (PET, ETEL, and CES)	25,000
1b.	Emergency and Passenger Telephone System (PET, ETEL, and CES systems)	560
2a.	Public Address Components	25,000
2b.	Public Address System	560
3a.	Closed Circuit Television Components	25,000
4b.	Closed Circuit Television System	2000
4.	Radio System	25,000
5.	SCADA -Train Control System	15,000
6.	SCADA – Emergency Ventilation System	15,000

1.04 SUBMITTALS

A. Submit:

1. Reliability Program:

a. Within 180 days after award of the Contract, submit for approval the proposed reliability program plan. The below elements of the program must be based widely on industry accepted program such as, MIL-STD-785B and must include, but not be limited to:

1) Organization and responsibilities of the proposed reliability effort.

2) Details of the design and component selection and screening processes proposed to be used to meet the reliability requirements.

3) Details of the procedures proposed to be used to calculate MTBF predictions.

4) Identification of the sources proposed to be used for component reliability data.

5) Proposed serialized type forms and reports, including preventive maintenance and discrepancy reports specifically for the joint use of the Contractor and Sound Transit during the field reliability assessment-testing program.

2. State the accepted reliability program being followed and provide a conformance matrix between it and the above program elements.

B. Predicted Reliability Reports:

1. The Contractor must submit the predicted reliability study 60 days prior to component procurement. The report must provide the predicted reliability for each of the included subsystems and propose an alternate design or equipment for the approval of Sound Transit, if areas of common failure appear inherent in the specified design mode or equipment.

2. Update the reliability report and re-issue showing components that meet the reliability requirements. Indicate for each subsystem the estimated percent of design completion upon which the reliability prediction is made.

3. Include in the report, an analysis of items for which the prediction does not meet the reliability requirements or for which the prediction had changed significantly from the last report. Describe the corrective action proposed in this Section of the report for items predicted not to meet the reliability requirements.

4. Forward an updated report to Sound Transit whenever deviations of the predicted reliabilities are encountered during design (i.e., prior to production). If these reports indicate a marked decrease in predicted reliability, Sound Transit may require an alternate design or equipment change to increase predicted reliability to the requirements specified in the Table of Reliability Goals.

C. Reliability Testing Procedures:

1. Obtain Sound Transit approval of detailed test procedures before field reliability assessment testing begins. The test procedures must include, but not be limited to, the following details:

2. A listing of components by description, part number, and quantity comprising each line item in the Table of Reliability Goals.

3. Graphical sample presentation of the test plan and table to be used.

4. Burn-in (debugging) time.

5. Performance parameters to be measured.

6. Performance limits beyond which a failure has occurred.

7. Sample report and log forms to be used.

1.05 MAINTENANCE

A. Preventive Maintenance:

1. Preventive maintenance procedures specified in the approved operating and maintenance manuals for the equipment during normal operation must be performed during the reliability testing period. Any additional preventative maintenance during the period of the Contractor's maintenance responsibility must be recorded and evaluated for their effect on the reliability test.

2. Other maintenance actions required on behalf of other equipment such as troubleshooting, checkout, or downtime investigations must be termed as preventive maintenance and classed as non-chargeable failures when performed in connection with reliability assessment.

PART 2 - PRODUCTS

2.01 MANUFACTURED PRODUCTS

A. Materials involved in reliability program:

1. The equipment considered part of each subsystem with requirements must be as follows:

a. Emergency Telephone System:

1) All telephone hardware (ETELs, PETs, CESs), software, power connections and wiring, and data/network hardware required to send and receive telephone signals and status data between the Control Center and the wayside or station device are required to meet the component MTBF for procurement and analysis purposes. Failure to transmit/receive voice or data between the Control Center and the wayside or station device is a System Chargeable Failure.

b. Public Address System:

1) All public address system hardware, software, power connections and wiring, and data/network connections and wiring required to send and receive public address messages and data between the Control Center and the station speaker zone are required to meet the component MTBF for procurement and analysis purposes. Failure to transmit/receive voice or data between the Control

Center workstations and more than one station speaker zone at one transit station is a System Chargeable Failure.

c. Closed Circuit Television System:

1) All closed circuit television system hardware, software, power connections and wiring, and data/network connections and wiring required to send and receive data or images to the Control Center from the wayside or station device are required to meet the component MTBF for procurement and analysis purposes. Failure to transmit/receive data or images between the Control Center workstation and the wayside or station device is a System Chargeable Failure.

d. Radio System:

1) All radio system hardware, software, power connections and wiring, and data/network connections and wiring required to send and receive voice or data signal from the Control Center to the wayside. Failure to transmit/receive voice or data in the area required to be covered by the expanded radio system is a System Chargeable Failure.

e. SCADA - Train Control System:

1) All train control system hardware (office and field), software, power connections and wiring, and data/network connections and wiring required to send controls, receive indications, display train control information from the Control Center to the wayside or station. Failure to be able to perform these functions at a Control Center workstation is considered a Chargeable Failure.

f. SCADA - Emergency Ventilation System:

1) All Emergency Ventilation System hardware (office and field), software, power connections and wiring, and data/network connections and wiring required to send controls, receive indications, emergency ventilation information from the Control Center to the wayside or station. Failure to be able to perform these functions at a Control Center workstation is considered a Chargeable Failure.

PART 3 - EXECUTION

3.01 TEST PREPARATIONS

A. The Contractor's personnel assigned to participate in field data collection for reliability testing must be fully trained in their assigned tasks and be familiar with the approved reliability test plan. It is expected that these must be the Contractor personnel assigned to maintain the Communications System until the Contractor’s maintenance training class is completed.

B. The Contractor personnel assigned to evaluate reliability data, and supervise the overall execution of the Reliability Plan must have performed a similar function for at least one prior major transit communications project.

3.02 ASSESSMENT PROGRAM

A. Verification that the equipment fulfills the reliability requirements described herein must be per the approved Reliability Plan and as prescribed herein.

3.03 FIELD RELIABILITY DEMONSTRATION TESTING

A. The reliability of the various equipment types and sub-systems is specified in the Table of Reliability Goals. The minimum mean time between failures must meet or exceed the reliability figures shown in the Table of Reliability Goals.

B. Test all designated equipment and subsystems.

C. Modify or replace any subsystem or component part rejected by the reliability assessment program without additional cost to the Contract. Any such modification or replacement must be subject to the approval of Sound Transit and subjected to the same reliability assessment program as the original equipment.

D. Reliability tests must start and end as described in this section. Data collection must be per device; per subsystem; for each location with MTBF results cumulative.

3.04 REPAIR

A. Verifying Repair:

1. Following repair or corrective action and prior to resumption of reliability testing, it must be permissible to operate a maximum one week burn-in test to verify the effectiveness of the repair. Failures and repair time during this period must be recorded and reported but not used in determining compliance with MTBF requirements.

3.05 FIELD QUALITY CONTROL

A. Assessment Reports:

1. Submit reliability assessment reports every three months showing comparison of field reliability testing results with accept-reject criteria for each subsystem item in the Table of Reliability Goals.

3.06 FINAL DOCUMENTATION

A. Submit a final reliability assessment report upon completion of specified reliability testing. The report must be by device; by subsystem; by location and cumulative.

3.07 FAILURE DOCUMENTATION

A. Report and formally record any malfunction or fault which prevents or limits equipment from performing its function in accordance with these specifications. The report must include:

1. Failure Rate.

2. Independent Failure.

3. Dependent Failure.

4. Simultaneous Failure.

5. Chargeable Failure.

6. Non-chargeable Failure.

3.08 TEST LOGS

A. The logs must contain the following information:

1. Identification of the component and subsystem by location, function, serial numbers (if applicable), and line item of Table of Reliability Goals to which the equipment is charged.

2. Number of like components and subsystems in service.

3. Date and time equipment was placed in service.

4. Date and time of each failure.

5. Cause of each failure.

6. Classification of each failure (chargeable, not chargeable).

7. All repairs and adjustments made and reasons for same.

8. Length of time to replace failed equipment.

9. Personnel name and signoff

B. Once each month, review the logs and make the following entries:

1. Accumulated operating hours or cycles per subsystem.

2. Accumulated chargeable failures per subsystem.

3.09 EQUIPMENT FAILURE RECORD.

A. Maintain a failure record for each line item. The record must be designed to permit keeping of the entire test history of each line item on a single sheet so that behavior of the line items may be easily recognized. This record must show all component failures for the line item.

3.10 CORRECTIVE ACTION

A. When any reliability test reaches a reject decision, the test will be discontinued for that line item. Immediately notify Sound Transit. Develop and propose a plan for correction of the deficiencies. Sound Transit will review such corrective action and may require handling as a design change or modification.

3.11 FAILURE SUMMARY RECORD.

A. Maintain a failure summary record containing all the information needed to reach an accept/reject decision on the system under test. Make all entries directly and there must be no need to process the data prior to an accept/reject decision. The summary must include all component failures considered chargeable on all like equipment under test. The record must present the current test status, including information on the total hours of test, failures, and MTBF of all units on test.

END OF SECTION

SECTION 28 08 10

COMMISSIONING OF ACCESS CONTROL SYSTEM

NOTE TO DESIGNER:

SECTIONS WITH BRACKETS. E.G., [TEXT] ARE TO BE MODIFIED OR DELETED IF NOT APPLICABLE. ITALICIZED TEXT PROVIDES INSTRUCTION TO THE DESIGNER TO INCLUDE LANGUAGE ON SPECIFIC TOPICS WHEN APPLICABLE. THE INSTRUCTIONS ARE TO BE DELETED WHEN THE SPECIFICATION IS FINALIZED. LANGUAGE NOT IN BRACKETS IS TO BE USED 'AS IS' WITHOUT MODIFICATION OR WITH AN APPROVED SPECIFICATION MODIFICATION REQUEST.

DESIGNER TO DELETE TEXT ABOVE FOR FINAL SECTION

PART 1 - GENERAL

1.01 SUMMARY

A. Section Includes:

1. Requirements for commissioning process for Access Control Systems at Stations and Parking Garages:

a. Level 1 commissioning activities for Access Control Systems.

b. Level 2 commissioning activities for intra-facilities system interface tests between systems within this Contract.

c. Level 3 commissioning activities for interface verification between systems provided under this Contract with systems provided by others.

d. Support for Level 4 commissioning activities related to Access Control Systems

B. Commissioning for Stations involves the interface with the Building Management System (BMS), including the central servers at LCC as well as the central access control server at the Security Operations Center (SOC).

C. Commissioning for Parking Garages involves the interface with the central access control server at the SOC.

D. Definitions:

1. See general commissioning requirements as stated in the Contract Documents for commissioning definitions.

2. Access Control Systems: When used in this Section refers to the elements of the Access Control System provided and implemented by this Contract as specified in access control system requirements, as stated in the Contract Documents. These elements include the following subsystems: Access Control System and the cabling and power systems associated with these subsystems.

3. Command: When used in the description of a commissioning activity, command means to use a human machine interface (HMI) for the Access Control System, equipment, and components.

4. Systems, Equipment, and Components: Where these terms are used together or separately, they shall mean "as-built" systems, equipment, and components.

1.02 COORDINATION

A. See general commissioning requirements as stated in the Contract Documents for general coordination requirements related to commissioning.

1.03 COMMISSIONING ACTIVITIES

A. Furnish labor and material to accomplish access control system commissioning including:

1. Provide to the Testing and Commissioning Manager preliminary O&M information for use in developing commissioning test procedures.

2. Assist the Testing and Commissioning Manager in developing commissioning activity procedures and data forms submittals for work specified in this Section.

3. Provide information to the Testing and Commissioning Manager needed for control interface wiring diagrams submittals for the work of this Section.

4. Perform Level 1 and Level 2 commissioning activities specified in this Section, including installation verification, static tests, start-up, component tests, equipment tests, system tests, and intrastation system interface tests.

5. Provide support for Level 3 commissioning activities, including jointly with the Systems contractor the connection to the Lenel OnGuard system at Link Control Center (LCC), being present during Level 3 testing with adequate labor and support personnel to adjust equipment and troubleshoot system failures that might arise. When material or equipment provided by this Section is found to conflict with specified criteria, adjust or replace said material or equipment, with the assistance of manufacturer as needed.

6. Operate equipment and system during commissioning activities as required by the Commissioning Coordinator.

7. Perform and document commissioning tests to verify readiness for commissioning test demonstration. Commissioning tests are specified in this contract.

8. Correct issues and repeat commissioning tests when results do not meet acceptance criteria.

9. Commissioning Test Demonstrations:

a. Repeat commissioning tests on a sample basis to demonstrate acceptable performance: Level 1 Component, Equipment, and System Commissioning Tests, and for Level 2 intra-station system interface tests.

b. Record and submit commissioning test demonstration data and issues.

c. Correct issues and repeat commissioning test demonstration when results do not meet Acceptance Criteria.

10. Attend commissioning meetings as requested by the Testing and Commissioning Manager.

11. Report any inconsistencies or issues in system operations or performance.

12. Provide personnel to support commissioning test demonstration specified in this contract as requested by the Testing and Commissioning Manager.

13. In the event that a commissioning test demonstration fails, assist in determining the cause of failure. Make corrections, as necessary.

B. Cooperate with Testing and Commissioning Manager to accomplish commissioning work on schedule and in coordination with other trades.

1.04 QUALITY ASSURANCE

A. Coordinate completion of Install Verification forms, by the Quality Control Inspector, as identified in the Contractors Quality Control Inspection and Test Plan.

PART 2 - PRODUCTS

2.01 TEST EQUIPMENT

A. Provide test equipment and instrumentation, including consumable supplies, required to execute commissioning activities. Unless noted otherwise, test equipment and instrumentation remain the property of the Contractor.

B. Provide proprietary test instruments or tools required by the equipment manufacturer. Provide and operate the proprietary test instruments or tools as required for commissioning work.

1. This must include a laptop with testing software, and mock access cards, provided by the access control manufacturer for the purpose of testing functionality prior to connection to final Sound Transit security database.

PART 3 - EXECUTION

3.01 LEVEL 1 COMMISSIONING ACTIVITIES REQUIREMENTS

A. Level 1 commissioning activities scope: Technical requirements for commissioning of Access Control Systems are specified in this contract.

B. Provide technicians, instrumentation, and tools to perform commissioning activities in accordance with accepted commissioning activity procedures at the direction of the Testing and Commissioning Manager.

C. Scope of Access Control Systems commissioning activities applies to all portions of the Access Control Systems installation described in the test.

D. Upon approval of product submittals associated with Technical requirements and the scope of Commissioning develop and submit for approval Install Verification Checklist forms for the quality criteria of the Work specified in this contract.

E. Preparation:

1. Certify that Access Control Systems, subsystems, and equipment have been completed, calibrated, and started; and are operating in accordance with Contract Documents.

2. Testing Instrumentation: Install measuring instruments and logging devices to record test data in accordance with accepted commissioning test procedures as directed by the Testing and Commissioning Manager.

F. Certify that Access Control Systems hardware and cabling has been completed and calibrated; are operating according to the Contract Documents; and that pretest set points have been recorded. Test all operating modes, interlocks, control responses, and responses to abnormal or emergency conditions, and verify proper response of building automation system controllers and sensors.

G. Perform tests using design conditions whenever possible. If tests cannot be completed because of a deficiency outside the scope of the Equipment system, document the deficiency and report it to Sound Transit. After deficiencies are resolved, reschedule tests.

H. Simulated conditions may need to be imposed using an artificial load when it is not practical to test under design conditions. Provide equipment to simulate loads. Set simulated conditions in accordance with accepted commissioning test procedures as directed by the Testing and Commissioning Manager. Document simulated conditions and methods of simulation. After tests, return settings to normal operating conditions.

I. Request approval to alter set points when simulating conditions is not practical. Request approval to alter sensor values with a signal generator when design or simulating conditions and altering set points are not practical.

J. Where seasonal testing is specified, complete appropriate initial commissioning tests and documentation within the Construction Period. Schedule and execute seasonal tests when specified conditions are expected.

3.02 LEVEL 1 AND LEVEL 2 COMMISSIONING ACTIVITY PROCEDURES

A. Submit Level 1 commissioning activity test procedures and data forms for the following types of commissioning activities, requirements for which are specified in this contract:

1. Level 1 commissioning activities:

   a. Installation verification.

   b. Component tests.

   c. Equipment tests.

   d. System tests.

2. Level 2 commissioning activities:

   a. Intra-station system interface tests to Civil Contractor provided equipment.

   b. Intra-station system interface to Systems Contractor provided equipment.

3. Example checklists/test forms can be provided upon request.

3.03 LEVEL 1 INSTALLATION VERIFICATION CHECKLIST REQUIREMENTS

A. Scope: Installation verification requirements apply to the following:

1. Access Control System, including supporting elements as stated in the Contract Documents.

B. Installation verification checklist forms shall include the following:

1. Organized to prompt the installer to check off quality criteria for each discrete portion of the Work.

2. Identify the system or features to which the installation verification checklist applies at the top of the form.

3. Section for verification of delivery of accepted materials.

4. Section for verification, and condition of materials at delivery.

5. Section for verification that installation meets contract documentation and any special installation instructions by respective manufacturer.

6. Space at the end of the form for the installer to print their name and company name, fill in the date, and sign or initial.

7. Space at the end of the form for the Quality Control inspector designated for the scope to review and accept installation verification. QC Inspector must perform Install Verification and verify each element identified in form has been reviewed for conformance with contract documents and in accordance with the Contractors Quality Control Inspection and Test Plan as part of Section 01 45 00 - Quality Assurance/Quality Control.

8. Space to identify the area of work for which the installer is executing the Installation Verification Checklist.

9. Description of the quality criteria as it pertains to the specific work. Include a check-box for each criterion.

C. Quality Criteria: Installation verification checklists shall address the following quality criteria:

1. Make and model match accepted submittals.

2. Equipment is installed without visible damage.

3. Equipment location is as indicated on drawings.

4. Equipment is accessible for maintenance using safe work practices.

5. There is sufficient space to remove and replace components intact without demolishing other work.

6. Identification of wiring and components is complete, legible, located to be visible, and in accordance with contract requirements.

D. Fill out and sign installation verification checklists for Access Control Systems while the Work is being installed. The intent is to fill out and sign the installation verification checklist as work proceeds to improve the quality of the installation. Retain completed installation verification checklists on site for review.

E. Before performing a commissioning test, installation verification checklists must be performed and completed by QC inspector designated for the appropriate area specified here in and within the Contractors Quality Control Inspection and Test Plan as part of Section 01 45 00 - Quality Assurance/Quality Control. Submit completed installation verification checklists for work included in the commissioning test.

3.04 LEVEL 1 INSTALLATION VERIFICATION

A. Installation verification checklists are required for the following, minimum:

1. 2808-IV-01 - Door Controllers.

2. 2808-IV-02 - Card Readers.

3. 2808-IV-03 - Magnetic Switches.

4. 2808-IV-04 – Door Position Switches.

5. 2808-IV-05 – Power Supplies.

6. [Designer: Coordinate scope for switches and power supplies to identify where base specification will reside, who will supply and how it will interface with ACS and BMS systems].

3.05 LEVEL 1 STATIC TESTS

A. 2808-ST-01: Access Control Cable:

1. System/equipment to be tested:

a. Access control data and communication cable.

2. Functions to be tested:

a. Conductors are terminated securely.

b. Cable shield is grounded at one location only.

c. Conductor insulation ensures isolation from other conductors and from ground.

3. Conditions of the test:

a. Conductors and shield measured with an ohmmeter.

4. Acceptance Criteria:

a. Ohmmeter measurements demonstrate expected isolation and continuity.

3.06 LEVEL 1 COMPONENT TESTS

A. 2808-C-01: Door Controller:

1. Component/Equipment to be tested:

a. Door Controller

2. Criteria to be verified:

a. Verify door controller functions as intended by swiping a mock valid card reader signal.

3. Conditions of the Test:

a. Confirm ability to view the Door Controller from an Ethernet -connected test laptop.

4. Acceptable Results:

a. Get a return address from the ping of the Door Controller.

b. Able to access the Door Controller from manufacturer supplied software via the Ethernet network.

B. 2808-C-02: Card Reader:

1. Component/Equipment to be tested:

a. Card Readers.

2. Criteria to be verified:

a. Verify card reader control of door locks via door controller.

3. Conditions of the Test:

a. Swipe each card reader with mock proximity card of each type intended to be used at the facility by Sound Transit.

4. Acceptable Results:

a. On swipe by properly mock card the door unlocks.

C. 2808-C-03: Door Position Switches:

1. Component/Equipment to be tested:

a. Door Position Switches.

2. Criteria to be verified:

a. Verify proper indication received by magnetic switches at the door controller.

3. Conditions of the Test:

a. Close each door.

b. Open each door.

4. Acceptable Results:

a. Door indicates closed at the door controller when the door is closed.

b. Door indicates open at the door controller when the door is opened.

3.07 LEVEL 2 INTRA-STATION SYSTEM INTERFACE TESTING REQUIREMENTS

A. 2808-IS-01: Access Control System Door/Gate/OH Grille/Door Interface:

1. System/equipment to be tested:

3.08 DOOR/GATES/OVERHEAD GRILLE OR OVERHEAD GRILLE

A. Doors/gate/Overhead Grille or Overhead Grille controllers.

B. Card Readers.

C. Door position switches.

D. BMS Interface (at Stations only).

E. Coordinate with Section 08 08 00 - Commissioning of Openings, and IS tests for Sequence of Operations for:

1. Overhead Coiling Grilles or Vertical Lift Doors.

2. Security Group A-E, L and [X]: [*Designer to identify additional Security Groups from Sections 08 08 00 – Commissioning of Openings and 08 71 00 – Door Hardware]*

a. Functions to be tested:

1) Door/gate entry and exit supervisory diagnostic capabilities.

2) Sequence of operations.

3) BMS interface capabilities (at Stations only).

b. Conditions of the test:

1) Dependent upon Sequence of Operations.

2) Coordinate procedures and forms with Testing and Commissioning Manage. Combined forms are acceptable with approval from Commissioning Authority, otherwise duplicate forms are to be developed and submitted.

c. Acceptance Criteria:

1) Dependent upon Sequence of Operations identified in Section 08 08 00 - Commissioning of Openings.

2) Local access control equipment operates as specified and intended, providing status and control.

3) BMS interface for status and control is confirmed.

3.09 LEVEL 3 INTER-STATION SYSTEM INTERFACE TEST REQUIREMENTS

A. Perform Level 3 testing to ensure the correct exchange of signals between the equipment supplied by others and integration with existing head end systems, including:

1. The BMS software and TCN network at LCC, and the Access Control System equipment provided for the Stations under this Contract.

2. The software and network at SOC, and the Access Control System equipment provided for the Stations and Parking Garages under this Contract.

B. Level 3 Test Support: During the Level 3 testing period, must be coordinated with Sound Transit, and the team of Transit Systems within Operations. Provide adequate personnel to adjust equipment and troubleshoot system failures that might arise. Conduct Level 3 tests with the assistance from Contractor, Construction Management, External Systems Contractors, Operations, and the final design consultant. Systems will be tested together during Level 3 Testing to ensure proper functionality, inter-operability, and reliability of systems necessary for operation.

C. Provide copies of all settings and terminal wiring to Sound Transit – Transit Systems and the [Systems contractor] to confirm and validate the interface to SOC.

D. When a piece of Contractor provided, equipment is found to conflict with specific criteria, have an experienced representative of the manufacturer make an adjustment to the item. If adjustments fail to correct the operation of a piece of equipment or fixture, remove the equipment or fixture from the Contract site and replace it with a workable replacement that will meet the specification requirements.]

E. 2808-IIS-01 Access Control System Door/Gate/OH Grille/Door – Remote Interface:

1. System/equipment to be tested:

a. Door/gates/Overhead Grille or Overhead Grille.

b. Doors/gate/Overhead Grille or Overhead Grille controllers.

c. Card Readers.

d. Door position switches.

e. BMS Interface (at Stations only).

f. Coordinate with Section 08 08 00 - Commissioning of Openings, and IS tests for Sequence of Operations for:

1) Overhead Coiling Grilles or Vertical Lift Doors.

2) Security Group A-E, L and [X] [Designer to identify additional Security Groups from Sections 08 08 00 – Commissioning of Openings and 08 71 00 – Door Hardware].

2. Functions to be tested:

a. Door/gate entry and exit supervisory diagnostic capabilities.

b. Sequence of operations.

1) BMS interface capabilities (at Stations only).

3. Conditions of the test:

a. If network is completed prior to Level 2 testing completion, allowing connectivity to SOC/LCC then 2808-IS and 0808-IS. Test is satisfied and does not need to be repeated.

1) If network is not ready at time of Level 2 testing, re-perform sequence of operations tests identified in 2808-IS and 0808-IS tests.

4. Acceptance Criteria:

a. If network is completed prior to Level 2 testing completion, allowing connectivity to SOC/LCC then 2808-IS and 0808-IS test results may satisfy this requirement with documentation approval by the Commissioning Authority.

b. If network is not ready at time of Level 2 testing, re-perform sequence of operations tests identified in 2808-IS and 0808-IS tests and validate SOC/LCC interface for status and control.

3.10 LEVEL 1, 2 AND LEVEL 3 TEST REQUIREMENTS MATRIX

	2808-IV-0X	**2808-ST-0X**	**2808-C-0X**	**2808-ST-0X**	**2808-IS-0X**	**2808-IIS-0X**
Door Controller	X		X			
Card Reader	X		X			
Door Position Switches	X		X			
Power Supplies	X					
Access Control Cable		X		X		
Access Control System Door/Gate Interface					X	
Access Control System Door/Gate Interface – Remote Interface						X

[Designer: Add or modify Matrix as necessary based on tests added or modified above depending upon the location design for access control]

END OF SECTION

EXHIBITS (On Proceeding Pages)

1. EXHIBIT A – Sample Test Form

EXHIBIT A – SAMPLE TEST FORM

First Test	PASS	Test Date: _____
Repeat Test	FAIL	

OBJECTIVES:

A. Verify that the access control main power supply panels are installed to code, manufacturer's instructions, and design document requirements.

EQUIPMENT TO BE TESTED:

Equipment ID	Description
LPS-xx	Access control main power supply panels

REFERENCE DOCUMENTS:

Document
Drawings:
Specification Sections:
Submittals:

TEST PRE-REQUISITES:

Activity	Notes	Completed?	
		Yes	No
None			
Notes: (1)			

MINIMUM PARTICIPANTS:

Participant	Notes	Required?	
		Yes	No
Installing contractor			
Sound Transit site quality inspector			
Notes: (1)			

REQUIRED INSTRUMENTATION AND EQUIPMENT:

Instrument or Equipment						Notes	Provided Instrumentation meets Requirements?	
Type or Sensed Parameter	Manufacturer	Model	Range	Accuracy	Calibration Date/ Next Cal. Due		Yes	No
None				±	/			

Notes:

(1)

CONDITIONS AT TIME OF TESTING:

AREA OF WORK:

Area in Which Work will be Conducted:
Garage and Abutment
Notes: (1)

ISSUES DISCOVERED AND PROPOSED RESOLUTIONS:

No.	Issue	Proposed Resolution

Notes:

(1)

SIGNATURES:

Company	Printed Name	Signature	Date
Installing Contractor:			
Sound Transit site quality inspector			
Other Witness:			

GENERAL CHECKLIST

Equipment ID	Conditions of materials at time of delivery is acceptable:	The make and model of the materials and/or equipment matches the product submittals:	The installed materials and/or equipment does not have visible damage, including finishes:	The equipment and/or distribution materials matches the locations shown on the design dwgs:	The equipment and/or distribution materials matches the locations shown on the as-built dwgs:	The manufacturer's recommended and required maintenance clearances are maintained:	Notes	Pass?		Date
								Yes	No	
COMM RM L106 LPSx3										
DC-01 LPS										
DC-04 LPS										
DC-05 LPS										

Notes:

(1)

MANUFACTURER'S INSTALLATION INSTRUCTIONS

No.	Checklist Item	Notes	Pass? Yes	Pass? No	Date
Manufacturer's Installation Instructions					
2.0	Card Access Control Power Supply Cabinets: Verify that all instructions and recommendations of the attached manufacturer's installation instructions have been followed. COMM RM L106 LPSx3 DC-01 LPS DC-04 LPS DC-05 LPS				

Notes:

(1)

END OF EXHIBITS

SECTION 28 08 31

COMMISSIONING OF FIRE DETECTION AND ALARM

PART 1 - GENERAL

1.01 SUMMARY

A. Section Includes:

1. Requirements for commissioning for the Fire Detection and Alarm System (FDAS):

a. Develop commissioning test plan, test procedures, and test forms.

b. Level 1 commissioning activities for the FDAS.

c. Level 2 commissioning activities for the FDAS.

d. Support for Level 3 commissioning activities related to the FDAS.

e. Support for Level 4 commissioning activities related to the FDAS.

f. Configuration and monitoring requirements for station and garage fire alarm systems differ. Separate commissioning procedures must be developed for station and garage fire alarm system commissioning.

B. Definitions:

1. See general commissioning requirements as stated in specification Section 01 91 13 – General Systems Testing and Commissioning Requirements, Section 28 31 00 - Fire Detection and Alarm, for commissioning definitions.

2. Fire Alarm System (FDAS): When used in this section refers to a system that consists of components and circuits arranged to monitor, detect, and annunciate the status of fire alarm or supervisory signal-initiating devices and to initiate the appropriate response to those signals, and include, but are not limited to systems governed by IFC 907 and NFPA 72.

3. Systems, Equipment, and Components: Where these terms are used together or separately, they must mean “as-built” systems, equipment, and components.

1.02 COORDINATION

A. See general commissioning requirements (Section 01 91 13 - General Systems Testing and Commissioning Requirements) for general coordination requirements related to commissioning. Some Level 1 and all Level 2 activities require coordination with other trades.

B. The final testing with the fire department for each system is to follow Level 1 and 2 commissioning activities. Requirements for final testing is outline in Section 28 13 00 - Fire Detection and Alarm. Preliminary testing with the fire department is permitted following Level 1 commissioning activities when approved by the resident engineer.

1.03 COMMISSIONING ACTIVITIES

A. Work furnishes labor and material to accomplish commissioning of the FDAS as stated in Section 01 91 13 - General Systems Testing and Commissioning Requirements and Section 28 13 00 - Fire Detection and Alarm, and in this specification including:

1. Provide the Testing and Commissioning Manager with preliminary Operations and Maintenance (O&M) information.

2. Assist the Testing and Commissioning Manager develop a test plan, test procedures and testing forms for work specified in this Section. Test procedures and forms must be submitted for review and approval as outlined in Section 01 91 13 - General Systems Testing and Commissioning Requirements.

3. Provide the Testing and Commissioning Manager control interface schedules and wiring diagrams needed for the work of this Section.

4. Perform Level 1 and Level 2 commissioning activities specified in this Section, including installation verification, static tests, start-up, component tests, equipment tests, systems tests, and intrastation system interface tests.

5. Provide support for Level 3 commissioning activities. Support the communications system contractor in field testing points in interface terminal cabinets. Be present and support level 3 testing with adequate labor and personnel to troubleshoot system failures and adjust or replace equipment as needed to complete commissioning. Adjust or replace defective material or equipment when material or equipment is found to be noncompliant with specified criteria.

6. Operate FDAS equipment and system during commissioning activities as required by the Testing and Commissioning Manager.

7. Perform and document commissioning tests to verify readiness for commissioning test demonstration as required by this specification.

8. Correct issues and repeat commissioning tests when results do not meet all acceptance criteria.

9. Commissioning Test Demonstrations: General requirements for Level 1 and Level 2 commissioning test demonstrations as required by the Contract:

   a. Repeat commissioning tests on a sample basis to demonstrate acceptable performance. Perform Level 1 Component, Equipment, and System Commissioning Tests Perform Level 2 Intra-station system interface tests.

   b. Record and submit commissioning test demonstration report including test data and issues encountered.

   c. Correct issues and repeat commissioning test demonstration when results do not meet all acceptance criteria.

10. Attend commissioning meetings as requested by the Testing and Commissioning Manager.

11. Report any inconsistencies or issues in system operations or performance.

12. Provide personnel to support commissioning test demonstration of this specification as requested by the Testing and Commissioning Manager.

13. If a commissioning test demonstration fails, assist in determining the cause of failure. Make corrections needed to pass test criteria.

B. Support the Testing and Commissioning Manager as needed to accomplish commissioning work on schedule and in coordination with other trades.

1.04 QUALITY ASSURANCE

A. Coordinate completion of Install Verification forms, by the Quality Control Inspector, as identified in the Contractors Quality Control Inspection and Test Plan.

PART 2 - PRODUCTS

2.01 TEST EQUIPMENT

A. Provide test equipment and instrumentation, including consumable supplies, required to execute commissioning activities in compliance with this specification and all manufacturer requirements. Test equipment and instrumentation must remain the property of the Contractor unless noted otherwise.

B. Provide proof of calibration of test equipment. Test equipment must be calibrated within one (1) year of use. A sticker from the calibration laboratory must be affixed to the test equipment indicating date of calibration.

C. Provide proprietary test instruments or tools required by the equipment manufacturer. Provide and operate the proprietary test instruments or tools as required for commissioning work.

PART 3 - EXECUTION

3.01 LEVEL 1 AND 2 COMMISSIONING ACTIVITIES REQUIREMENTS

A. Technical requirements for commissioning of the FDAS in this specification.

B. Provide technicians, instrumentation, and tools to perform commissioning activities in accordance with accepted commissioning activity procedures at the direction of the Testing and Commissioning Manager.

C. Scope of FDAS commissioning activities applies to all portions of the installation described in the test. Where sampling is specified, it applies only to the commissioning test demonstration.

D. Submit Installation Verification Checklist forms for quality criteria for work in this specification upon approval of product submittals associated with commissioning technical requirements and scope.

E. Preparation:

1. Certify that Fire Alarm System, subsystems, and equipment have been installed, calibrated, and are operating in accordance with Contract Documents.

2. Testing Instrumentation: Install measuring instruments and logging devices to record test data in accordance with accepted commissioning test procedures as directed by the Testing and Commissioning Manager.

3. Certify that FDAS hardware and wiring has been completed and calibrated, is operating according to the Contract Documents, and that pretest set points have been recorded.

F. Test all operating modes, interlocks, control responses, and responses to abnormal or emergency conditions, and verify proper response of building automation system controllers and sensors.

G. Perform tests using design conditions whenever possible. If test cannot be completed because of a deficiency outside the scope of the Equipment system, document the deficiency and report it to Sound Transit. After deficiencies are resolved, reschedule tests.

H. Simulated conditions may need to be imposed using an artificial load when it is not practical to test under design conditions. Provide equipment to simulate loads. Set simulated conditions in accordance with accepted commissioning test procedures as directed by the Testing and Commissioning Manager. Document simulated conditions and methods of simulation. After tests, return settings to normal operating conditions.

I. Request approval to alter set points when simulating conditions is not practical. Request approval to alter sensor values with a signal generator when design or simulating conditions and altering set points are not practical.

J. When performing tests under simulated conditions, return the system to normal operation at Test completion.

3.02 LEVEL 1 AND LEVEL 2 COMMISSIONING ACTIVITY PROCEDURES

A. Submit a single (combined) commissioning document (checklists, test procedures, forms) for all Level 1 commissioning activities as outlined below for each fire alarm and detection system for review and approval as outlined in Section 01 91 13 - General Systems Testing and Commissioning Requirements. The document must be broken up into sections with each activity and part separate with a sub header. Completed sections for each activity group (IV, SU, C, S) must be submitted upon completion. Level 1 and 2 commissioning documents are intended to serve as a significant part of the test procedure required by Section 28 13 00 - Fire Detection and Alarm.

1. Level 1 commissioning activities:

a. Installation verification (IV).

b. Start-up procedures (SU).

c. Component tests (C).

d. System tests (S).

2. Level 2 commissioning activities:

a. FACP (Fire Alarm Control Panel) to BMS (Building Management System) system interface tests.

b. FACP to Public Address (PA) system interface tests.

c. FACP to Emergency Ventilation System (EVS) interface tests.

d. FCAP connections to access control system enabling release of door strikes.

e. Station FACP to Link Control Center (LCC) and Operations and Maintenance Facility (OMMF) via VLAN (provided by Sound Transit).

f. Parking garage FACP connection and communication to third party monitoring system (Contracted by Sound Transit).

3.03 LEVEL 1 INSTALLATION VERIFICATION REQUIREMENTS

A. Scope: Installation verification requirements apply to the following:

1. Fire Detection and Alarm System. For projects with multiple systems, each system must be accounted for independently.

B. Installation verification checklist forms must include the following:

1. Organization to prompt the installer to check off quality criteria for each discrete portion of the Work.

2. Identify the system or features to which the installation verification checklist applies at the top of the form.

3. Section for verification of delivery of accepted materials.

4. Section for condition of materials at delivery.

5. Section for description of installation steps. Include manufacturer's installation instructions. Space at the end of the form for the installer to print their name and company name, fill in the date, and sign or initial.

6. Space at the end of the form for the Quality Control inspector designated for the scope to review and accept installation verification. QC Inspector must perform Install Verification and verify each element identified in form has been reviewed for conformance with contract documents and in accordance with the Contractors Quality Control Inspection and Test Plan as part of Section 01 45 00 – Quality Assurance / Quality Control.

7. Space to identify the area of work for which the installer is executing the Installation Verification Checklist.

8. Description of the quality criteria as it pertains to the specific work. Include a checkbox for each criterion.

9. Example checklists/test forms can be provided upon request.

C. Quality Criteria: Installation verification checklists must address the following quality criteria:

1. Record and ensure the equipment, wire, and cable make and model match accepted submittals.

2. Equipment is installed without visible damage.

3. Equipment is clean and free of debris.

4. Location is as indicated on drawings.

5. Equipment is accessible for maintenance using safe work practices.

6. There is sufficient space to remove and replace components intact without demolishing other work.

7. Installation in accordance with accepted shop drawings, pipeline layout drawings, support and seismic design submittal, manufacturers' requirements, and contract documents.

8. Panels are mounted as outlined in plan and elevation details of shop drawings.

D. Fill out and sign installation verification checklists for Equipment while the Work is being installed. The intent to fill out and sign the installation verification checklist as work proceeds to improve the quality of the installation. Retain completed installation verification checklists on site for review.

E. Before performing a commissioning test, installation verification checklists must be performed and completed by QC inspector designated for the appropriate area specified here in and within the Contractors Quality Control Inspection and Test Plan as part of Section 01 45 00 – Quality Assurance and Control. Submit completed installation checklists for work included in the commissioning plan.

3.04 LEVEL 1 INSTALLATION VERIFICATION

A. Installation verification checklists are required to include the following, at a minimum:

1. 2813-IV-01 - Fire Alarm Control Panel, Remote Annunciator, Power Supply (NAC) panels.

2. 2813-IV-02 - Alarm initiating/supervisory devices.

3. 2813-IV-03 - Alarm notification appliances.

4. 2813-IV-04 - Controlled equipment interfaced.

5. 2813-IV-05 – Raceway, enclosures, electrical boxes.

3.05 LEVEL 1 START UP

A. Start-up tests are required to include the following, at a minimum:

1. 2813-SU-01: Fire alarm Control Panel (FACP).

2. Main FACP, Sub panels, power supplies (NAC), and remote annunciators:

a. Criteria to be verified:

1) Panels are mounted in the correct location.

2) All panels have AC power and AC circuit enters the panel in the location required by the manufacturer.

3) Panel components.

4) Batteries perform when AC power is lost.

b. Conditions of the test:

1) The panels have been installed and powered, wiring complete and other requirements for startup as required by the manufacturer.

c. Acceptable results:

1) Panel location located in accordance with approved submittals.

2) All panels located in conditioned space.

3) Interconnecting raceway aligns with approved shop drawings, manufacture requirements and the NEC. See plan and elevation details of shop drawings.

4) Confirm each panel has a dedicated circuit with the correct breaker. Consult manufacturer's literature regarding where AC circuit may enter the panel.

5) For modular panel, the panel includes all the components outlined in the approved submittals.

B. Static Test checklists are required to include the following, at a minimum:

3.06 LEVEL 1 COMPONENT TESTS

A. Component Test checklists are required to include the following, at a minimum:

1. 2831-C-01: Conductor installation general:

a. Component/Equipment (visual inspection of wire, cable, and raceway – no instrumentation required):

1) Conductors for signaling initiating, notification, and control circuits.

2) Fire alarm raceway, junction boxes and terminal cabinets.

b. Criteria to be verified:

1) Class A or Class B wiring method met, per approved shop drawings, return route for Class A independent and separated.

2) Wire fill matches shop drawings to meet NEC fill limitations.

3) Inspect wire/cable color and type for conformance with approved submittals.

4) Wire/cable type meets code and environmental conditions.

5) Confirm shielded cable is only used where indicated in approved submittals.

6) No splicing, wire nuts of other inferior connections found. Wire terminates at devices, panels, and terminals cabinets only.

c. Conditions of the test:

1) Prerequisites: All IV activities completed.

2) Fire alarm junction boxes and raceway identified (red).

3) Main panel, terminal cabinets, junction boxes and other panels open for visual inspection.

4) Terminal cabinets provided with approved terminals and all conductors landed.

d. Acceptable Results:

1) No damaged insultation (as can be verified visually).

2) Wire/cable meets high temperature, wet rated, and smoke development criteria where applicable.

3) No tee tapping, wire nut or other unapproved wiring connection methods.

4) NFPA 72 requirement for wire classification (Class A or Class B) is met.

5) Conduit fill matches approved shop drawings (verify by wire count at representative locations).

6) No unsupervised wire to controlled equipment longer than 3 feet per NFPA 72.

7) Shielded wire is not provided unless specifically approved by submittal.

8) Wire neatly bundled and routed within panels and other cabinets.

2. 2831-C-02: Conductor integrity:

a. Component / Equipment:

1) Conductors for signaling, initiating, notification, and control circuits.

2) Main panel, terminal cabinets, junction boxes and other panels open for visual inspection.

3) Fire alarm junction boxes and raceway identified (red).

b. Criteria to be verified:

1) Supervision of all circuits, where required.

2) Confirm that a disconnected device on a circuit does not inhibit reception of an alarm from another device on the same circuit.

3) No Ground Faults.

4) Confirm no unintended ground conditions including ground loops.

5) Measure insulation resistance.

c. Conditions of the test:

1) Prerequisites: All IV and SU activities completed and 2813-C-01 complete.

2) Calibrated test equipment appropriate for the application is used.

3) Disconnect each Initiating Device or Notification Appliance circuit to test for Supervision.

4) With one side of an Initiating Device disconnected, place another device on the same circuit in Alarm.

5) Test for Ground Fault detection and operation by carefully grounding one side of each Initiating and Notification Appliance circuit.

6) Develop additional test procedures as required.

d. Acceptable Results:

1) Proper supervision of all Initiating and Notification circuits: An audible and trouble signal is received at the FACP.

2) Device in Alarm on same circuit annunciates satisfactorily and initiates proper sequence at the FACP.

3) Appropriate Alarm operation during Ground Alarm tests.

4) FACP tone device sounds.

5) FACP system Trouble LED lights.

6) FACP alphanumeric display indicates correctly.

7) Conductor exhibits no ground conditions.

8) Minimum insulation resistance between two conductors or between conductors and ground is 10 megohms or greater.

3. 2831-C-03: Alarm Initiating Devices:

a. Component / Equipment to be tested:

1) Manual Pull Stations.

2) Heat Detectors.

3) Smoke Detectors.

4) Duct Smoke Detectors.

5) Sprinkler Flow Switch.

6) Sprinkler Supervisory / Tamper Switch.

b. Criteria to be verified:

1) Verify receipt of alarms from each device.

2) Duct detector remote indicator illuminates.

3) FACP tone device operation upon receipt of alarm.

4) Notification appliance operation within designated areas when applicable.

5) Zone LED flashes.

6) Alphanumeric address or label is displayed at the FACP.

7) Alarm Silence Switch operation.

8) FACP reset following alarm.

c. Conditions of the test:

1) Initiate an alarm from each device using manufacturer's recommended procedures.

d. Acceptable Results:

1) Each device reports satisfactorily with the appropriate address and FACP tone sounds: Proper supervision of alarm initiation device.

2) Alarm Silence Switch performs as follows:

a) Silences FACP tone.

b) Audible Notification appliances cease operation.

c) All Zone and Device LEDs remain steady.

d) Second operation un-silences alarm.

4. 2831-C-04: Notification Appliances:

a. Component / Equipment to be tested:

1) Combination Audible / Visible Devices.

2) Fire Alarm Visible Devices.

b. Criteria to be verified:

1) Verify receipt of supervisory alarms from each device.

2) Measure sound pressure levels for all audible devices.

3) Confirm all visible notification appliances have clear lines of sight.

4) Confirm that all visible notification appliances are synchronized when more than two strobes are within the same field of view.

5) Confirm that all audible notification appliances are programmed to provide a standard three-pulse temporal pattern.

c. Conditions of the test:

1) Prerequisites: All IV and SU activities completed. Component testing 2813-C-01 and 2813-C-02 completed.

2) Initiate an alarm from a manual pull station or other initiating device.

3) Take sound pressure measurements in physically remote areas from notification appliances.

4) Take sound pressure measurements in rooms with no notification appliance devices.

d. Acceptable Results:

1) Each device reports satisfactorily with the appropriate address and FACP tone sounds: Proper supervision of notification appliance.

2) Notification appliances operate in designated areas when applicable.

3) Sound pressure levels throughout the protected area are a minimum 15 dBA above ambient or 5 dB above the maximum sound level having a duration of at least 60 seconds, whichever is greater. Total sound pressure must not exceed 110 dBA.

4) Visible notification appliances are clear from obstructions and synchronized as specified.

3.07 LEVEL 1 SYSTEM TESTS

A. System Test checklists are required to include the following, at a minimum:

1. 2831-S-01: Fire Alarm Control Panel (FACP):

a. System to be tested: Fire alarm system without interface to other systems.

b. Functions to be tested:

1) Controlled equipment interface.

2) Battery and battery charger tests including supervision/trouble.

3) Panel microphone for systems with speakers.

4) Sequence of operation for each variation.

5) Silence, alarm acknowledge, and reset functionality.

6) Other panel tests recommended by the manufacturer.

c. Conditions of the test:

1) All Level 1 tests must be completed before performing Level 1 System Tests.

2) To test controlled interface relays/modules, initiate or simulate an alarm using the manufacturer's recommended procedures.

3) Perform controlled interface test before controlled equipment is connected to the control interface device.

4) To test sequence of operation, initiate a device that is representative for each zone. At a minimum an elevator machine room, elevator shaft, and elevator lobby must be tested independent of other devices to confirm relays respond as designed.

d. Acceptable Results:

1) Verification of sequence of operation. For controlled interface, a visible indicator indicates a change of state at the control point. Indicator may be imbedded in the device, or a temporary indicator may be used.

3.08 LEVEL 2 INTRA-STATION SYSTEM INTERFACE TESTS

A. The Testing and Commissioning Manager will provide Test Procedures and Data Forms for the following tests, requirements for which are specified in this specification. Intra-Station System Interface Test checklists are required to include the following, at a minimum:

1. 2831-IS-01: Fire alarm interface to fire/smoke dampers.

a. System / Equipment to be Tested:

1) Fire alarm control panel.

2) Field relays.

3) Fire/smoke dampers and smoke dampers.

b. Functions to be tested:

1) Damper operation.

2) Remote indicator operation (when provided).

3) End switch functionality (when provided).

4) Coordinate with other trades when end switches are monitored by other systems.

c. Conditions of test:

1) All Level 1 fire alarm and fire/smoke damper system tests completed with satisfactory results.

2) Access panels open to observe damper position.

d. Acceptable Results:

1) Fire smoke dampers fully open while system is normal.

2) Fire smoke dampers close in response to system alarm in accordance with the fire alarm sequence of operation.

3) Damper position (open and close verified directly).

4) Damper end switched report fully open and fully closed at the FACP or other system (BMS) monitoring the position of the damper.

2. 2831-IS-02: Fire alarm interface to environmental fan and HVAC units:

a. System / Equipment to be Tested:

1) Fire alarm.

2) Field relays.

3) Environmental fans/HVAC units.

b. Functions to be tested:

1) Automatic shutdown direct to fan/HVAC MCC or via BMS (when identified or required).

2) Automatic fan/HVAC restart upon alarm reset (when specified).

c. Conditions of test:

1) All Level 1 fire alarm, BMS and HVAC complete with satisfactory results.

d. Acceptable Results:

1) Fan stops upon alarm activation in accordance with the fire alarm sequence of operation.

2) Fan is enabled to restart by normal means via the BMS system.

3. 2831-IS-03: Fire alarm interface to automatic sprinkler systems:

a. System / Equipment to be Tested:

1) Fire alarm system.

2) Field relays and module for interface with flow switch, pressure switches, and valve tamper switches.

3) Exterior bell or horn/strobe device.

b. Functions to be tested:

1) Fire and supervisory alarms for flow, pressure, and tamper switches.

2) Exterior bell or horn/strobe activation in accordance with the fire alarm sequence of operation. (Note: Often this device only activates for waterflow alarms).

c. Conditions of test:

1) All Level 1 fire alarm and water-based fire suppression systems commissioning activities are completed.

d. Acceptable Results:

1) Water flow switches result in alarm within an acceptable period (i.e., 15-30 seconds). Time delay adjustments must be integral with the waterflow switch.

2) Waterflow switches annunciate with the correct system type and area served.

3) Tamper switches annunciate as a supervisory alarm with the correct system type, location and system served.

4) Air pressure annunciate as a supervisory alarm with the correct system type, location and system served.

4. 2831-IS-04: Fire alarm interface to emergency radio system:

a. System / Equipment to be Tested:

1) Fire alarm system.

2) Emergency radio system interface.

b. Functions to be tested:

1) Supervisory alarms from the emergency radio system.

2) Trouble alarm from emergency radio system.

c. Conditions of test:

1) All Level 1 fire alarm and emergency radio systems commissioning activities area completed.

d. Acceptable Results:

1) Supervisory alarms from the emergency radio system reports to the fire alarm system as a summary alarm or individual points for each category as outlined in the fire alarm sequence of operation.

2) Trouble alarm from the emergency radio system reports to the fire alarm system as outlined in the fire alarm sequence of operation.

5. 2831-IS-05: Fire alarm interface to tunnel automatic (deluge) valve:

a. System / Equipment to be Tested:

1) Fire alarm system.

2) Interface with deluge valves.

3) Maintenance bypass switches.

4) Waterflow indication.

b. Functions to be tested:

1) Automatic operation.

2) Manual operation.

3) Inhibit function.

c. Conditions of test:

1) All Level 1 fire alarm and water-based fire suppression system commissioning activities area completed.

d. Acceptable Results:

1) Deluge valve(s) open automatically in accordance with the fire alarm sequence of operation.

2) Deluge valve(s) open manually when called upon from buttons at the fire alarm control panel.

3) Deluge valve(s) are inhibited when maintenance bypass switches are in the bypassed position.

6. 2831-IS-06 Fire Alarm Control Panel to Building Management System (BMS) interface (stations only):

a. System / Equipment to be tested:

1) Fire Alarm Control Panel (FACP) to Building Management System (BMS) system interface (stations only).

b. Functions to be tested:

1) Activation of any single alarm initiating device in the Station is transmitted to the BMS as a Station summary alarm.

2) See FACP interface signal list in the Contract Drawings.

3) FACP provides supervised addressable relay outputs to signal BMS. BMS provides supervised discrete inputs to read these signals.

c. Conditions of the test:

1) Level 1 System Tests completed.

2) BMS communications interface cabling completed.

d. Acceptable Results:

1) Communications transmitted between the Fire Alarm Control Panel and the Building Management System are complete and accurate.

2) Equipment responses of BMS controlled equipment are as defined in the BMS commissioning specification. Dampers close and HVAC equipment shut down on alarm and re-open/re start on return to normal conditions, unless otherwise noted in the Sequences of operations for Clean Agent Operation.

3) See BMS commissioning specification.

4) See FACP interface signal list in the Contract Drawings.

7. 2831-IS-07: Fire alarm interface to clean agent system:

a. System / Equipment to be Tested:

1) Fire alarm system interface.

2) Clean agent system.

b. Functions to be tested:

1) Clean agent pre-alarm (first detector) fire alarm sequence of operation.

2) Clean agent alarm (second detector) fire alarm sequence of operation.

3) Clean agent pre-alarm manual activation fire alarm sequence of operation.

4) Clean agent supervisory condition.

5) Clean agent system trouble condition.

6) Coordinate with others to test HVAC shutdown via BMS concurrently with this test. (See activity ####-IS-#).

7) Coordinate with others to test interface with fire smoke dampers. (See activity 2108-IS-01).

c. Conditions of test:

1) All Level 1 fire alarm and water-based fire suppression system commissioning activities area completed.

d. Acceptable Results:

1) Pre-alarm and alarm conditions report at the fire alarm system in accordance with the fire alarm sequence of operation.

2) Supervisory condition (summary) reports to fire alarm system indicating the system type and system location.

3) Trouble condition (summary) reports to fire alarm system indicating the system type and system location.

4) Event description at clean agent panel and fire alarm panel match.

1. 2831-IS-08: Fire alarm interface to public address (PA) system:

a. System/equipment to be tested:

1) Fire Alarm Control Panel Interfaces.

2) PA system performance.

3) Microphone priority.

b. Functions to be tested:

1) Fire alarm activation of PA system provide alarm tone and emergency messages.

2) Local microphone priority.

3) Silence and bypass switches.

4) Coordinate with other commissioning activities so the PA contractor may facilitate sound pressure testing to meet the requirements of the IFC and NFPA 72.

c. Conditions of the test:

1) Fire alarm and PA system Level 1 testing activities complete.

2) PA system alarm tone and emergency messages loaded.

d. Acceptance Criteria:

1) PA system provide alarm tone and emergency messages play in accordance with the fire alarm sequence of operation. Each message performs as outline in the fire alarm sequence of operation and the project emergency response matrix.

2) PA non-emergency messages are preempted until the system is reset.

3) PA system supervisory alarm reports to fire alarm system.

4) PA system trouble alarm reports to fire alarm system.

5) Local microphones have priority in accordance with the design.

6) FACP Silence and bypass switches function as intended.

2. 2831-IS-09: Fire alarm interface to EVS for visual message boards:

a. System/equipment to be tested:

1) Fire Alarm Control Panel Interfaces.

2) Station visual message boards.

b. Functions to be tested:

1) Visual message board emergency messages.

c. Conditions of the test: Perform test on complete, fully functional system.

1) Fire alarm and PA system Level 1 testing activities complete.

2) Visual message boards installed, and system programmed.

d. Acceptance Criteria:

1) Visual message boards switch over the textual emergency messages in accordance with the fire alarm sequence of operation and the project emergency response matrix.

2) Emergency messages remain displayed even if the audible alarm is silenced.

3) Emergency messages remain active until the FACP is reset.

3. 2831-IS-10: Fire alarm interface to stair/elevator pressurization systems:

a. System/equipment to be tested:

1) Fire alarm panel interface with EVS and other controls.

2) Fan and isolation damper control including VFD.

3) Barometric relief damper control.

4) Damper end switches.

5) Fan status switches.

6) Annunciation and manual control panel (EVS or firefighter smoke control panel).

b. Functions to be tested:

1) Fans and dampers operate as outlined in the fire alarm sequence of operation and the smoke control sequence of operation. Initiate stair, lobby, waterflow and other alarm inputs to verify sequence.

2) Test local fan control by stopping and restarting systems manually at the EVS or firefighter's smoke control panel.

3) Confirm fan status at the EVS or firefighter's smoke control panel.

4) Confirm damper position at the EVS or firefighter's smoke control panel.

5) Coordinate with other commissioning activities as needed to perform a complete commissioning of the system as required by the AHJ and smoke control special inspector.

c. Conditions of the test:

1) Fire alarm, mechanical and electrical system Level 1 commissioning activities complete.

2) Test muse be witnessed by a smoke control special inspector.

d. Acceptance Criteria:

1) Fans and dampers operate automatically as outlined in the fire alarm sequence of operation and the smoke control sequence of operation,

2) Local (manual) fan control performs as designed.

3) Fan status matches field position and is in accordance with the design.

4) Damper position is correctly indicated at the EVS or firefighter's smoke control panel.

8. 2831-IS-11: Connection to Emergency Ventilation System (EVS) provided under separate contract (stations only).

a. System / Equipment to be tested:

1) FACP to EVS system interface. (Stations only).

2) See FACP interface signal list in the Contract Drawings.

b. Functions to be tested:

1) EVS must be verified to provide all applicable output and monitoring functions in accordance with local AHJ Codes.

2) Trouble conditions (opens, shorts, short-to-ground) for interfacing between EVS and Fire Alarm. FACP must provide supervised addressable discrete input circuits to receive EVS signals. The FACP must provide supervised addressable dry contact discrete output circuits to signal the EVS PLC.

c. Conditions of test:

1) Level 1 System Tests completed.

2) Communication and control between the FACP and the EVS are functional and accurate.

d. Acceptable Results:

1) The results of all tests, measurements, and adjustments have been signed off by Sound Transit and Test Documentation completed.

9. 2831-IS-12: FACP interface to fire doors and electronic locks/strikes:

a. System / Equipment to be Tested:

1) FACP.

2) Electromagnet hold open devices and door closers.

3) Fire doors.

4) Door hardware.

b. Functions to be tested:

1) Fire doors release and close to latch in accordance with the fire alarm sequence of operation.

2) Door locks/strike unlock in accordance with the fire alarm sequence of operation.

c. Conditions of test:

1) Level 1 Fire alarm system commissioning activities completed.

2) Doors, door hardware including hold open devices installed commissioned and adjusted to properly close to latch.

d. Acceptable Results:

1) Fire doors release in accordance with the sequence of operation.

2) Door locks and strike posture to the locked or unlocked condition in accordance with the design.

3) Test coordinated with other so that fire door commissioning may occur simultaneously.

10. 2831-IS-13: FACP communication to third party monitoring system (Contracted by Sound Transit):

a. System / Equipment to be Tested:

1) FACP interface with central station communicator.

2) Communicator reliably communicates with the central station and sends alarm, waterflow, supervisory, and trouble alarms.

3) Sign strength for MESH, Cellular technologies meets codes, standards, and requirements of the central station.

b. Functions to be tested:

1) End to.

c. Conditions of test:

1) Fire alarm system Level 1 system commissioning activities are complete.

2) Fire alarm system Level 2 system commissioning activities are substantially complete.

d. Acceptable Results:

1) FACP interface with central station communicator in accordance with manufacturer's instructions.

2) Communicator reliably communicates with the central station and sends alarm, waterflow, supervisory, and trouble alarms.

3) Sign strength for MESH, Cellular technologies meets codes, standards, and requirements of the central station.

11. 2831-IS-14: Station FACP to Link Control Center (LCC) and Operations and Maintenance Facility (OMMF) via VLAN (provided by Sound Transit):

a. The contractor must develop a test plan that outlines systems to be tested, functions to be tested, conditions of test, and acceptable results.

12. 2831-IS-15: Other IS commissioning activity as required by the Contract..

3.09 LEVEL 1 AND LEVEL 2 TEST REQUIREMENTS MATRIX

Activity	**Level 1**				**Level 2**
	2831-IV-0X	**2831-SU-0X**	**2831-C-0X**	**2831-S-0X**	**2813-IS-0X**
Fire alarm control panel (FACP)	X				
Alarm initiating/supervisory devices	X				
Alarm notification appliances	X				
Controlled equipment interfaces	X				
Raceway, enclosures, electrical boxes	X				
Fire alarm control panel (FACP)		X			
Conductor installation general			X		
Conductor integrity			X		
Alarm initiating devices			X		
Alarm notification appliances			X		
Fire alarm control panel (FACP)				X	
Fire alarm interface to fire/smoke dampers.					X
Fire alarm interface to environmental fan and HVAC units					X
Fire alarm interface to automatic sprinkler systems					X
Fire alarm interface to emergency radio system					X
Fire alarm interface to tunnel automatic (deluge) valve					X
Fire alarm to building management system (BMS) interface (stations only)					X
Fire alarm interface to clean agent system					X
Fire alarm interface to EVS for visual message boards					X
Fire alarm interface to stair/elevator pressurization systems					X
Connection to emergency ventilation system (EVS) provided under separate contract (stations only).					X
FACP interface to fire doors and electronic locks/strikes.					X
FACP communication to third party monitoring system (Contracted by Sound Transit).					X
Station FACP to Link Control Center (LCC) and Operations and Maintenance Facility (OMMF) via VLAN (provided by Sound Transit).					X
Fire alarm interface to other					X

3.10 LEVEL 3 INTER-STATION SYSTEM INTERFACE TEST REQUIREMENTS

A. Perform Level 3 tests in accordance with general commissioning requirements as required by the Contract.

B. Systems Integrated Test: Support the testing program to ensure the correct exchange of signals between the BMS and the SCADA system at LCC (supplied by the Systems L800 contractor).

C. System-Wide Integrated Test Support: During the system-wide integrated testing period, provide adequate supervisory mechanical and electrical support personnel to adjust equipment and troubleshoot system failures that might arise.

D. Control System Testing: Verify the functionality of integration of Division 28 controls with that of Division 25 contracts. The Control System Testing period will last 30 days. This period begins when Systems Integration Testing has been completed.

E. During the Continuity Testing and Control System Testing periods, perform the following:

1. Jointly field test points with the L800 contractors and verify the operation and monitoring of equipment as shown on the Contract Drawings, wiring diagrams, and SIDT.

2. Be present during this testing period with adequate labor and support personnel to adjust equipment and troubleshoot system failures that might arise.

3.11 LEVEL 3 AND LEVEL 4 SYSTEM TESTS

A. System Test checklists must include the following, at a minimum:

1. 2831-ISIS-01: Centralized FireWorks workstations:

a. System / Equipment to be tested:

1) FACP to FireWorks workstation communication.

2) FireWorks workstation configuration and functionality for new stations.

3) FireWorks workstation is existing. The configuration must be updated by the contractor to include new stations.

b. Functions to be tested:

1) All screen elements, data logging, alarming, data historian, trending, etc. functions of the FireWorks workstation for the added stations.

c. Conditions of test:

1) Level 1 System Tests completed.

2) Communication between the FACP and the FireWorks workstation are operational and perform as expected.

d. Acceptable Results:

1) All screen elements, data logging, alarming, data historian, trending, etc. functions of the FireWorks workstation for the added stations are functioning correctly.

3.12 LEVEL 3 AND LEVEL 4 TEST REQUIREMENTS MATRIX

Activity	**2813-ISIS-0X**
FireWorks workstation	X

END OF SECTION

EXAMPLES (On Proceeding Pages)

1. Example - Test Plan

EXAMPLE - TEST PLAN

Level 1 test plan for fire alarm must be organized to include the following commissioning activities and provided in a single submittal as outlined in Section 28 08 13 - Commissioning of Fire Detection and Alarm.

1. **2831-IV-01 FIRE ALARM CONTROL PANEL (FACP)**
2. **2831-IV-02 ALARM INITIATING/SUPERVISORY DEVICES**
3. **2831-IV-03 ALARM NOTIFICATION APPLIANCES**
4. **2831-IV-04 CONTROLLED EQUIPMENT INTERFACES**
5. **2831-IV-05 RACEWAY, ENCLOSURES, ELECTRICAL BOXES**
6. **2831-SU-01 FIRE ALARM CONTROL PANEL (FACP)**
7. **2831-C-01 CONDUCTOR INSTALLATION GENERAL**
8. **2831-C-02 CONDUCTOR INTEGRITY**
9. **2831-C-03 ALARM INITIATING DEVICES**
10. **2831-C-04 ALARM NOTIFICATION APPLIANCES**
11. **2831-S-01 FIRE ALARM CONTROL PANEL (FACP)**

EXAMPLE FOR IV CHECKLISTS

See ST Commissioning Library for other Parts.

2831-IV-01 Fire alarm control panel (FACP)

ST N65 – Edmonds Transit Center

OBJECTIVES:

A. Verify that the fire alarm control, NAC panels, and annunciator panels are installed per the manufacturer's installation directions and design document requirements.

EQUIPMENT TO BE TESTED:

Equipment ID	Description
FACP	Fire alarm control
NAC-1, 2, 3	Power Panels
Annunciator 01	Remote Annunciator
Other	e.g.., Deluge release panels

REFERENCE DOCUMENTS:

Document
IFC Drawings:
Specification Sections: 28 31 00
Submittals (Shop Drawings and material submittals):

TEST PRE-REQUISITES:

Activity	Notes	Completed?	
		Yes	No
None		☐	☐
		☐	☐

Notes:
(1)

MINIMUM PARTICIPANTS:

Participant	Notes	Required?	
		Yes	No
Installing contractor		☒	☐
Sound Transit site quality inspector		☐	☐

Notes:
(1)

REQUIRED INSTRUMENTATION AND EQUIPMENT:

Instrument or Equipment						Notes	Provided Instrumentation meets Requirements?	
Type or Sensed Parameter	Manufacturer	Model	Range	Accuracy	Calibration Date/ Next Cal. Due		Yes	No
None				±	/		☐	☐
				±	/		☐	☐

Notes:
(1)

CONDITIONS AT TIME OF TESTING:

Describe the status of the job site and system being evaluated.

AREA OF WORK:

Area in Which Work will be Conducted:

Describe the extent of the system.

Notes:
(1)

ISSUES DISCOVERED, PROPOSED RESOLUTIONS, AND CORRECTION TRACKING:

No.	Issue	Proposed Resolution	Date Resolved by Contractor	Date Verified by QC Inspector	QC Inspector Initials

ISSUES DISCOVERED, PROPOSED RESOLUTIONS, AND CORRECTION TRACKING:

Notes: (1)					

GENERAL REQUIREMENT FOR ALL LEVEL 1 ACTIVITIES

No.	Checklist Item	Notes	Pass?		Date
			Yes	No	
1.1	Conditions of materials at time of delivery is acceptable:		☐	☐	
1.2	The make and model of the materials and/or equipment matches the product submittals:		☐	☐	
1.3	The installed materials and/or equipment does not have visible damage, including finishes:		☐	☐	
1.4	The equipment and/or distribution materials matches the locations shown on the design drawings.		☐	☐	
1.5	The equipment and/or distribution materials matches the locations shown on the approved submittals.		☐	☐	

QUALITY CONTROL INSPECTOR VERIFICATION

I have reviewed the section above and validated through field inspection that the information in the table above is complete and accurate.

_____ _____ _____

Printed name Initials Date

Notes:

(1)

FACP 2331-IV-01 – PANEL GENERAL CONDITIONS

No.	Checklist Item	Notes	Pass?		Date
			Yes	No	
1.6	The manufacturer's recommended and required maintenance clearances are maintained:		☐	☐	
1.7	All panels are mounted in the correct location per approved shop drawings		☐	☐	
1.8	All panels located in a conditioned room		☐	☐	
1.9	Maintenance clear access provided per NEC		☐	☐	

QUALITY CONTROL INSPECTOR VERIFICATION

I have reviewed the section above and validated through field inspection that the information in the table above is complete and accurate.

_____ _____ _____

Printed name Initials Date

Notes:

(1)

FACP 2331-IV-01 – PANEL COMPONENTS

No.	Checklist Item	Notes	Pass?		Date
			Yes	No	
NA	Modular fire alarm panels equipped with the correct components per the approved submittals. List all including part numbers that appears in bill of materials and confirm each item and quantities in the field.	Quantity	Yes	No	
1.10	Wall Box, Chassis, and door		☐	☐	
1.11	Square wireway and interconnecting conduits		☐	☐	
1.12	Network Card		☐	☐	
1.13	Batteries		☐	☐	
1.14	CPU: 3-CPU3		☐	☐	
1.15	Audio Source Unit		☐	☐	
1.16	Display Module		☐	☐	
1.17	Network cards		☐	☐	

FACP 2331-IV-01 – PANEL COMPONENTS

No.	Checklist Item	Notes	Pass?		Date
			Yes	No	
1.18	Controller		☐	☐	
1.19	Amplifier 40 watts		☐	☐	
1.20	Lantronix Module		☐	☐	
1.21	Battery Cabinet/shelf		☐	☐	
1.22	Relay cabinet gear		☐	☐	
1.23	Network communications card: 3-RS232		☐	☐	
1.24	Batteries – FACP-1		☐	☐	
1.25	Batteries – NAC-1		☐	☐	
1.26	NAC panel components		☐	☐	
1.27	Other panel components (specify: _____)		☐	☐	

QUALITY CONTROL INSPECTOR VERIFICATION

I have reviewed the section above and validated through field inspection that the information in the table above is complete and accurate.

_____ _____ _____

Printed name Initials Date

Notes:

(1)

FACP 2331-IV-01 -- PANEL MANUFACTURER REQUIREMENTS

No.	Checklist Item	Notes	Pass?		Date
			Yes	No	
MANUFACTURER'S INSTALLATION INSTRUCTIONS					
1.28	Verify that the installation follows all directions and recommendations per the **attached** manufacturer's installation directions for the Fire Alarm Control Panel.		☐	☐	

FACP 2331-IV-01 -- PANEL MANUFACTURER REQUIREMENTS

No.	Checklist Item	Notes	Pass? Yes	Pass? No	Date
1.29	Verify that the installation follows all directions and recommendations per the **attached** manufacturer's installation directions for the power supply panels. ☐ FACP-1 ☐ Relay cabinet ☐ Remote annunciator ☐ NAC-1 ☐ NAC-2 ☐ NAC-3 ☐ Deluge valve release ☐ Other		☐	☐	
Notes documented what was confirmed and any issues identified: (1)					
FIRE ALARM CONTROL PANEL AND NAC/POWER PANELS					
1.30	Verify that the circuit breaker(s) feeding the panels are fitted with a suitable guard to prevent shutting off the breaker without first removing the guard. Also verify that the guard still allows the breaker to trip normally with the guard in place.		☐	☐	
1.31	Verify that the 120V power supply is provided with surge protection to all panels.		☐	☐	
1.32	Verify that the 120V power supply is terminated into the panel only at the correct panel entrance location approved by the manufacturer to ensure separation of the 120V from the 24V within the panel.		☐	☐	
1.33	Verify cable and conductors that have been installed match the submittal and are NEC and NFPA 130 approved for the facility and environmental conditions (e.g., temperature, wet, smoke development).		☐	☐	
1.34	Verify that the field-installed conductors within panels are arranged neatly and routed to allow for access to components within the panel without interference from the wiring.		☐	☐	
1.35	Verify that the fire alarm printer is located near the FACP and connected with an appropriate cable.		☐	☐	
1.36	Verify that the printer is located on a suitable surface or mounting shelf or bracket(s).				

FACP 2331-IV-01 -- PANEL MANUFACTURER REQUIREMENTS

No.	Checklist Item	Notes	Pass?		Date
			Yes	No	
1.37	Verify all grounding and bonding is in place correctly, including panels and panel doors.		☐	☐	
1.38	Verify all labeling and identification has been completed for the panels and wiring terminations to the panels.		☐	☐	
1.39	Verify all labeling for assignable buttons/switches have been completed (such as for bypass switches, etc.).		☐	☐	

QUALITY CONTROL INSPECTOR VERIFICATION

I have reviewed the section above and validated through field inspection that the information in the table above is complete and accurate.

_____ _____ _____

Printed name Initials Date

Notes:

(1)

Part 1 - 2831-IV-02 FACP IV – ALARM INITIATING/SUPERVISORY DEVICE COMPONENTS

No.	Checklist Item	Notes	Pass?		Date
			Yes	No	
NA	Verify installed components match approved submittals and location and other requirements as specified. Field evaluation must be conducted with approved fire alarm shop drawings in hand.	Quantity	Yes	No	
2.1	Smoke detectors		☐	☐	
2.2	Heat detectors		☐	☐	
2.3	Weatherproof heat detectors		☐	☐	
2.4	Manual pull stations		☐	☐	
2.5	Duct detectors		☐	☐	
2.6	Duct detector remote indicator		☐	☐	

FACP 2331-IV-01 -- PANEL MANUFACTURER REQUIREMENTS

No.	Checklist Item		Notes	Pass? Yes	Pass? No	Date
2.7	Weatherproof back boxes		☐	☐		
2.8	Weatherproof conduit connections to weatherproof back boxes		☐	☐		
2.9	Standard back boxes		☐	☐		
2.10	Alarm interface modules (e.g., waterflow switches, tamper switches, and other devices) are located within proximity of monitored device.		☐	☐		

QUALITY CONTROL INSPECTOR VERIFICATION

I have reviewed the section above and validated through field inspection that the information in the table above is complete and accurate.

_____ _____ _____

Printed name Initials Date

Notes:

(1)

Part 1 - 2831-IV-02 FACP IV – ALARM INITIATING/SUPERVISORY DEVICE LOCATIONS

No.	Checklist Item	Notes	Pass? Yes	Pass? No	Date
2.12	Verify smoke detectors are located 36 inches away from supply diffusers of HVAC systems.		☐	☐	
2.13	Verify that the smoke detectors are located a minimum of ## inches away from fluorescent light fixtures.		☐	☐	
2.14	Verify that the heat detectors, located outdoors, are rated for those conditions.		☐	☐	
2.15	Verify that detectors are located within 15 feet of elevator doors.		☐	☐	
2.16	Verify alarm interface modules are located in required proximity of waterflow switches.		☐	☐	
2.17	Verify alarm interface modules are located in required proximity of devices to monitored for supervision alarms (control valves, air pressure switched, etc.)		☐	☐	

Part 1 - 2831-IV-02 FACP IV – ALARM INITIATING/SUPERVISORY DEVICE LOCATIONS

No.	Checklist Item	Notes	Pass?		Date
			Yes	No	
2.18	Verify devices are located in an area that is accessible for routine maintenance.		☐	☐	

QUALITY CONTROL INSPECTOR VERIFICATION

I have reviewed the section above and validated through field inspection that the information in the table above is complete and accurate.

_____ _____ _____

Printed name Initials Date

Notes:

(1)

Part 1 - 2831-IV-03 FACP IV – NOTIFICATION APLIANCES COMPONANTS

No.	Checklist Item	Notes	Pass?		Date
			Yes	No	
NA	Verify installed components match approved submittals and location and other requirements as specified. Field evaluation must be conducted with approved fire alarm shop drawings in hand.	Quantity	Yes	No	
3.1	Horns		☐	☐	
3.2	Horn/Strobes		☐	☐	
3.3	Strobes		☐	☐	
3.4	Speakers		☐	☐	
3.5	Speaker/strobes		☐	☐	
3.6	Weatherproof horn		☐	☐	
3.7	Weatherproof strobe		☐	☐	
3.8	Weatherproof speaker		☐	☐	
3.9	Weatherproof speaker/strobe		☐	☐	
3.10	Weatherproof back boxes including weatherproof conduit connections where applicable		☐	☐	

Part 1 - 2831-IV-02 FACP IV – ALARM INITIATING/SUPERVISORY DEVICE LOCATIONS

No.	Checklist Item	Notes	Pass?		Date
			Yes	No	

QUALITY CONTROL INSPECTOR VERIFICATION

I have reviewed the section above and validated through field inspection that the information in the table above is complete and accurate.

_____ _____ _____

Printed name Initials Date

Notes:

(1)

Part 1 - 2831-IV-03 FACP IV – NOTIFICATION DEVICE LOCATIONS

No.	Checklist Item	Notes	Pass?		Date
			Yes	No	
3.11	Verify devices are locate consistent with approved shop drawings.		☐	☐	
3.12	Verify that the devices are rated for unconditioned spaces when place in unheated spaces or outside.		☐	☐	
3.13	Verify horns are set for temporal tone and the correct sound pressure.		☐	☐	
3.14	Verify strobes are set for the correct candela setting.		☐	☐	
3.15	Verify the word “FIRE” if provided, is properly oriented.		☐	☐	
3.16	Verify strobes are properly synchronized to meet NFPA 72.		☐	☐	
3.17	Verify devices in public areas of the stations are located above the touch zone.		☐	☐	
3.18	Verify speakers are set or wired for the correct voltage and wattage.		☐	☐	
3.19	Verify devices are located in an area that is accessible for routine maintenance.		☐	☐	

Part 1 - 2831-IV-03 FACP IV – NOTIFICATION DEVICE LOCATIONS

No.	Checklist Item	Notes	Pass?		Date
			Yes	No	

QUALITY CONTROL INSPECTOR VERIFICATION

I have reviewed the section above and validated through field inspection that the information in the table above is complete and accurate.

_____ _____ _____

Printed name Initials Date

Notes:

(1)

Part 1 - 2831-IV-04 FACP IV – CONTROLLED EQUIPMENT INTEFACES

No.	Checklist Item	Notes	Pass?		Date
			Yes	No	
NA	Verify the correct number of programmable interface modules or relays are provided at each of the following locations and that there are wither 1) within 3 feet of the controlled equipment, or 2) wiring beyond the interface or relay is also monitored for supervision and short:		☐	☐	
4.1	Elevator group 1		☐	☐	
4.2	Elevator group 2		☐	☐	
4.3	HVAC MCC #1		☐	☐	
4.4	HVAC MCC #2		☐	☐	
4.5	Fire/smoke damper group #1		☐	☐	
4.6	Fire/smoke damper group #2		☐	☐	
NA	Verify adequate panel power and interface is available via power supplies to power the following:				
4.7	Waterflow alarm bell		☐	☐	
4.8	Doors held open with magnets		☐	☐	
4.9	Other fire doors when required		☐	☐	
4.10	Electronic locks/strikes		☐	☐	

Part 1 - 2831-IV-04 FACP IV – CONTROLLED EQUIPMENT INTEFACES

No.	Checklist Item	Notes	Pass?		Date
			Yes	No	

QUALITY CONTROL INSPECTOR VERIFICATION

I have reviewed the section above and validated through field inspection that the information in the table above is complete and accurate.

_____ _____ _____

Printed name Initials Date

Notes:

(1)

Part 1 - 2831-IV-05 FACP IV – RACEWAY, ENCLOSURES, ELECTRICAL BOXES,

No.	Checklist Item	Notes	Pass?		Date
			Yes	No	
NA	Verify the raceway, panel enclosures, electrical boxes, wire, and cable match the product submittals		☐	☐	
5.1	Terminal cabinets and terminal strips		☐	☐	
5.2	Electrical boxes including red cover plates		☐	☐	
5.3	Device back boxes		☐	☐	
5.4	Conduit type and size		☐	☐	
5.5	Conduit color or labels		☐	☐	
5.6	Back boxes for door magnets		☐	☐	
5.7	Doors back boxes for doors held open with magnets		☐	☐	

Part 1 - 2831-IV-04 FACP IV – CONTROLLED EQUIPMENT INTEFACES

No.	Checklist Item	Notes	Pass?		Date
			Yes	No	

QUALITY CONTROL INSPECTOR VERIFICATION

I have reviewed the section above and validated through field inspection that the information in the table above is complete and accurate.

_____ _____ _____

Printed name Initials Date

Notes:

(1)

ADDITIONAL NOTES:

SIGNATURES:

Company	Printed Name	Signature	Date
Installing Contractor:			
Quality Control Inspector			
Other Witness:			

END OF EXAMPLES

SECTION 28 31 00

FIRE DETECTION AND ALARM

NOTE TO DESIGNER:

SECTIONS WITH BRACKETS. E.G., [TEXT] ARE TO BE MODIFIED OR DELETED IF NOT APPLICABLE. ITALICIZED TEXT PROVIDES INSTRUCTION TO THE DESIGNER TO INCLUDE LANGUAGE ON SPECIFIC TOPICS WHEN APPLICABLE. THE INSTRUCTIONS ARE TO BE DELETED WHEN THE SPECIFICATION IS FINALIZED. LANGUAGE NOT IN BRACKETS IS BE USED 'AS IS' WITHOUT MODIFICATION OR WITH AN APPROVED SPECIFICATION MODIFICATION REQUEST.

DESIGNER TO DELETE TEXT ABOVE FOR FINAL SECTION

PART 1 - GENERAL

1.01 SUMMARY

A. This Section includes:

1. Requirements for furnishing and installing a fully addressable analog fire alarm and detection system. This specification applies to:

   Designer: List the applicable facilities here.

2. The fire alarm system design includes, but is not limited to, control units, power supplies, digital alarm communicating transmitter, remote annunciators, initiating devices, notification appliances, wiring, raceway, batteries, relays, terminal cabinets, outputs for specified fire, life safety and smoke control functions, and other equipment for a complete and operable system.

3. Provide interface between the fire detection and alarm system and other system as required for environmental fan/damper control.

4. Provide interface between the fire detection and alarm system for controlled equipment including fires/smoke dampers, elevators, fire doors and other controlled equipment.

5. [Monitor automatic sprinkler systems, standpipe systems, emergency radio communication systems, clean agent suppression systems when provided, and other systems (fire pumps, generators, etc.).]

6. [Provide connection, direct or interface with other systems as indicated in the drawings, for smoke control and emergency ventilation systems].

7. [Light Rail Stations: Provide emergency notification and emergency voice messages (EVACS) by interfacing with the PA system for public areas in stations as indicated in the drawings. Back of house areas or to be provided with horns unless PA speakers are required by the AHJ].

8. [Garages and other facilities: Provide audible notification using horns unless EVACS is required by code of the AHJ].

9. The Issued for Construction Drawings are diagrammatic in nature and are not intended to show all details required to provide a complete and operable system.

10. In case of conflicts the more stringent of this specification, manufacturer requirements, Authorities Having Jurisdiction (AHJ) requirements, the International Fire Code, or the requirements of NFPA 72 will govern.

1.02 REFERENCES

A. The following codes and standards apply. See drawings for applicable year.

1. International Fire Code with State and Local amendments

2. National Fire Protection Association (NFPA):

a. NPFA 3 Commissioning of Fire Protection and Life Safety Systems.

b. NFPA 4 Integrated Fire Protection and Life Safety System Testing.

c. NFPA 70 National Electrical Code (NEC) (with Washington State Amendments)

d. NFPA 72 National Fire Alarm and Signaling Code.

e. [NFPA 130 Fixed Guideway Transit and Passenger Rail Systems].

3. Underwriters Laboratories (UL):

a. UL 38 Manual Signaling Boxes for Fire Alarm Systems.

b. UL 50 Standard for Enclosure for Electrical Equipment

c. UL 268 Smoke Detectors for Fire Alarm Systems.

d. UL 268A Smoke Detectors for Duct Application.

e. UL 464 Standard for Safety Audible Signal Devices

f. UL 521 Heat Detectors for Fire Protective Signaling Systems.

g. UL 864 Control Units and Accessories for Fire Alarm Systems.

h. [UL 864 UUKL listed for smoke control].

i. UL 1481 Power Supplies for Fire Protective Signaling Systems.

j. UL 1971 Signaling Devices for the Hearing Impaired.

1.03 COORDINATION

A. Coordinate with the general contractor and other trades as needed.

1.04 SUBMITTALS

A. Submit the following:

1. Shop Drawings:

a. Drawings format must be 24-inch by 36-inch electronic (pdf) format or as otherwise approved. Layout Plan Drawings, schematics, Interconnect Drawings, and Wiring Diagrams must have EOR or Resident Engineer approval before submitting to the AHJ for approval.

b. Provide general layout drawings showing the complete system including equipment and device identification and arrangement. Provide a system

riser diagram which includes all system components. Typical diagrams are not acceptable.

c. The fire alarm system provider must be responsible for verification of complete coverage and dimensions, and to ensure the compatibility of all elements of the fire alarm/detection system components such as the FACP, with each other and with other systems that they interface with such as EVS, BMS and Public Address (PA) System. Provide a fully integrated and complete and operable system.

d. Provide a complete raceway and conductor/cable schedule which includes all raceways in the system. Identify raceway and conductor/cable sizes and types. Identify the size and number of conductors or cables in each conduit. Provide each system element such as raceway, circuit, channel, device, etc. with a unique alphanumeric identifier. Diagrammatic conduit routing is acceptable if it matches the layout and separate electrical raceway shop drawings are provided concurrently.

e. Provide panel shop drawings including communications, point to point, interconnection, field terminal, etc., wiring diagrams. Indicate interconnecting wiring between modules and field terminals. Indicate field devices connected to field terminals.

f. Provide a complete sequence of operations matrix and a complete narrative description that provides a detailed understanding of operational logic and the relationship between all input and output functions. When a matrix is provided in IFC drawings the shop drawings must use it as a basis of design but amend it as necessary to meet code and account for all aspects of the design.

Designer: For light rail project an emergency response matrix (ERM) that outlines additional control such as tunnel emergency ventilation fans and dampers. The ERM must not be confused with the fire alarm sequence of operation or clean agent sequence of operation. These three matrices must be independent but correlate to each other.

g. Provide a complete table of annunciation data points including alpha numeric data point identifiers. Include a functional description for each annunciation data point. Identify how each point will display on all applicable display devices including the FACP, Fire Alarm Remote Annunciator (FARA), Fire control workstations, etc.

h. Specify the data and communications interfaces between system components. Provide a system interface data table for the interfaces between fire alarm system components such as FACP, EVS, and other systems including the PA and BMS that the fire alarm components interface. Provide interface specification for each autonomous component that interfaces with other autonomous component. Provide the interface data table within 14 calendar days of AHJ acceptance of the supplier's proposal. The interface data table must include the following information:

1) Alpha numeric data element identifier.

2) Data element meaning, i.e., the physical parameter represented. Include device identification, measured quantity, etc. Differentiate status element from control/command elements.

3) Differentiate logical signal types such as discrete input (DI), discrete output (DO), analog input (AI), analog output (AO),

complex (multi element) data structure, communications, network connection, etc.

4) Differentiate the device, system, or location where the data element originates (produced) from the destination device or system that reads or processes (consumes) the data.

5) For discrete data elements indicate the normal (non-alarm) state of each point as normally open, normally closed, normally on, or normally off.

6) For FACP signals differentiate initiation, notification, class A, class B, voice, etc.

7) For communications interfaces indicate channel type such as RS232 or RS485 and protocol such as Modbus, Profibus, BACNET, etc. Indicate Baud rate and other serial communications settings.

8) For network connections indicate the destination device(s) and the network path(s) to the destination device(s).

9) Include field equipment terminal and PLC IO point identifiers in final interface data table provided with the O&M manuals.

10) Identify supervised signals and supervision method.

11) Fireworks Integration Plan. Include sample graphics sequence of development, and integration into existing system.

2. Interconnect Drawings: Show only external connections between equipment and devices. All cables/conductors must be identified with alphanumeric designators and all termination points must show the correct terminal identification.

3. Wiring Diagrams: Show the general physical arrangement of the component parts of the equipment and the connection of all internal wiring. All components, wires, terminal strips, and terminals must be identified with alphanumeric designators.

4. A cable/conductor table with circuit designations, wire count, AWG, and wire/cable type that accounts for various locations (raceway, open, plenum, wet location, damp location).

5. Panel Mounting Details: Panel elevation details to scale indicating panel dimensions, connecting raceway, square wireway above or below the main panel when more than one enclosure is required, AC power entry point, battery enclosure, terminal/relay cabinets, communication dialer, and other equipment to ensure available wall space and to coordinate with other trades.

6. Field Equipment Mounting Details: Show the mounting location for all ceiling and wall mounted equipment including distance from ceiling and column lines, and fabrication details for all special mounting brackets. All equipment will be designed to be attached to walls and ceiling/floor assemblies and held firmly in place (e.g., detectors will not be supported solely by suspended ceilings). Details must also be provided for special installation instructions. These details may be included on the Layout Plan Drawings if space allows.

7. Layout Plan Drawings: Show every device provided under this Section in its relative spatial location. Sections and elevations must be utilized as necessary to accurately describe the installed location of all devices.

8. System Calculations:

a. Voltage Drop Calculations: Provide line voltage drop calculations that must demonstrate that the voltage supplied at all indicating appliances is above the UL specified minimum for the indicating appliances employed. These calculations must assume operation on standby batteries after the required standby period. Therefore, a battery output of 20.4 VDC must be used in these calculations. The Fire Alarm Vendor must provide sufficient quantities and sizing for notification circuits and 24 VDC power supplies, in the proper locations, to ensure that the UL specified minimum voltage is present at all indicating appliances.

b. Battery Calculations: Itemize battery loads under standby and alarm conditions. Auxiliary power supplies and transponder battery calculations must demonstrate the ability of the batteries to supply the required secondary power for a period of 24 hours with no external power applied and at the end of that period operate in alarm mode for a period of fifteen (15) minutes. Battery sizing must be at a factor of 1.3 times the results of this mathematical requirement to account for battery aging between replacements and for system modifications and expansions. Submit calculations in accordance with NFPA 72 and manufacturer requirements.

c. Coordinate with [Spec 26###] for conduit fill calculations demonstrating compliance with the NEC required by that specification.

9. Equipment Data Sheets:

a. Show the color, configuration and dimensions of the equipment or device described.

b. Provide technical specifications, such as operating voltage, operating temperature, and humidity limitations, mounting and wiring information and a description of the function and operation of the device.

c. Provide listing information for all equipment (i.e., UL, FM, etc.).

10. Recommended Spare Parts List:

a. Within 120 days of scheduled completion provide a listing of all devices and components recommended for Sound Transit purchase as spare parts to support the system. The list must include recommended quantities for all items.

b. Provide unit price list valid for 90 days after submittal.

11. Test/Commissioning Plan (TP):

a. A written test plan that establishes the scope of the testing meeting the requirements of NFPA 72, a commissioning plan meeting the requirements of NFPA 3, and a test plan meeting the requirements of NFPA 4. The plan must be prepared to allow for test results to be recorded in the field during testing and a log of failures and corrections to be recorded.

b. Commissioning procedures, checklists and data forms required in Specification 28 08 31 Commissioning of Fire Detection and Alarm, and as required by the Contract, may be considered part of the written test/commissioning plan outlined in this specification.

c. A complete listing of all initiating devices with facility code, device address, device type, device location and alphanumeric description as programmed into the system.

B. Transmit the following:

1. Operation and Maintenance Manuals: Manuals must contain the following minimum information:

a. Complete Operating Instructions

b. Preventative Maintenance Instructions

c. Catalog Sheets on all Devices and Equipment

d. Manufacturers Operation and Maintenance Instructions

2. Record Drawings:

a. At the installation's completion, provide record drawings to reflect the accurate as-built condition. Working plans must show actual, accurate locations of devices, and actual routing of conduit and location of end of line devices. The installer must provide updated as-builts on CADD and two full-size prints of the Record Drawings.

1.05 QUALITY ASSURANCE

A. Regulatory Requirements:

1. Component Listing: All fire detection and alarm components furnished under this Section must be UL listed, listed in the Fire Equipment List or FM approved for the purpose for which they are used and must bear their listing mark. Accessory equipment must be manufactured with UL listed components.

B. Qualifications:

1. Manufacturer: Company specializing in analog addressable fire alarm systems with ten (10) years of experience.

2. Installer: Company specializing in analog addressable fire alarm systems with five (5) years documented experience and certified by the manufacturer as a fire alarm installation contractor. The Installer's project engineer must be NICET Level III (3) certified in fire alarm systems design and installation.

a. The Installer must evaluate and supplement the design shown on Issued for Construction Drawings as required for proper detection and alarm annunciation consistent with the characteristics of the proposed products to be incorporated into the system.

b. The Installer must prepare a design that, in addition to the minimum requirement shown, includes all additional design equipment, installation, and configuration necessary to obtain AHJ acceptance.

c. The fire alarm contractor must be within 75 miles of the project site.

d. Provide a fully equipped, qualified repair technician at the job site within four hours of the request for emergency services. This service must be available 24 hours a day during the term of the warranty.

3. Construction Drawings:

a. While the system installation is in progress, one set of shop drawings must be kept at the job site. This set will be designated as the construction drawings and will be updated each working day to reflect current as-built information indicating revision and additional detail from the approved

shop drawings. The owner's representative must be given access to this set of construction drawings to verify that the details are being recorded. At the end of the project these mark-up construction drawings must be submitted as part of the as-built drawings.

1.06 DELIVERY, STORAGE, AND HANDLING

A. Coordinate with the general contractor for delivery, storage, and handling of materials.

1.07 PROJECT CONDITIONS

A. The contractor must review the contract documents to determine if a space/area is conditioned so that the appropriate equipment, wire, and cable may be provided.

1.08 WARRANTY:

A. The Contractor must obtain and submit the manufacturer's warrantees which provide that all fire alarm system components furnished under this Contract including components provided by the electrician, fire alarm system vendor, and other vendors. The installation must be warranted against defect in design, material and workmanship for the full warranty time which is standard with the manufacturer and/or supplier but not less than two (2) years after AHJ system acceptance which coincides with when the system is placed in service and custody and control is transferred to the Owner or another party.

PART 2 - PRODUCTS

2.01 PERFORMANCE/DESIGN DEQUIREMENTS

A. The fire alarm system is a delegated design. The design must be based upon the drawings and other requirements outlined in this specification and as required by the Contract.

2.02 SYSTEMS/EQUIPMENT

A. Manufacturers:

1. [Light rail Stations: Edwards Systems Technology, EST4.]

2. [OMF Facilities: Edwards Systems Technology, EST4 or IO Series.]

3. [Garages and other buildings not requiring EVACS: Edwards Systems Technology IO Series, Simplex 4010ES or equal as accepted by the Sound Transit Specification Owner.

Designer Instruction: Select the appropriate panel given the scope of the project and delete those that do not apply.

B. The system must be fully addressable, with a unique identity for each device, by intelligent device where available, or intelligent module, including the following:

1. Smoke Detectors.

2. Heat Detectors.

3. Waterflow Switches.

4. Pressure Switches.

5. Tamper Switches.

6. Clean Agent System Alarms.

7. Manual Pull Station.

C. Heat detectors must be:

1. UL 521 listed.

2. Provided to detect a high temperature condition in the indicated areas.

3. Located in accordance with guidelines in NFPA 72 or manufacturers UL (or FM, if applicable) listed spacing.

4. located away from heating appliances.

5. Rated as required, must be provided to detect a high temperature condition in ceiling and roof structure cavities as required by code authority.

D. Smoke detectors must be:

1. Provided to detect fire conditions in the required areas.

2. Located in accordance with NFPA 72 [and NFPA 130.]

3. Separated by an appropriate distance from supply or return HVAC diffusers.

4. Installed in locations that are within the manufacturer's range for temperature and humidity.

E. A rechargeable battery supply must be provided to automatically operate the entire fire detection and alarm system, in compliance with NFPA 72 requirements, including detectors, control panel, notification devices, and auxiliary control equipment (unless otherwise specified in this specification) in the event of a loss of primary power. Battery capacity must not be reduced using the emergency generator provisions of NFPA 72.

F. Audible and visible alarm notification devices must be provided throughout the station.

G. [Light rail stations: automatic fire detection must be provided in all ancillary spaces that do not have automatic fire sprinklers or as required by the AHJ.]

H. Manual pull stations must be omitted from public areas when permitted by code and when agreed to in writing with the AHJ.

Designer: Passenger Emergency Telephone (PET) are usually accepted by the AHJ as an alternate for manual pull stations for station platform areas (A-3 occupancy). Seek written agreement with the AHJ to omit manual pull stations.

I. [Stations: A Public Address (PA) system, meeting the requirements of an Emergency Voice Alarm Communications System per NFPA 72 will be used for alarm notification and emergency voice communications during emergencies. The PA system must be provided by the PA system supplier. The PA system microphone, provided by the PA system supplier, will have priority over alarm notification and emergency messages.]

or

[Stations: The Fire Alarm system is equipped with an Emergency Voice Alarm Communications System per NFPA 72 using fire alarm speakers. When the fire alarm system is activated, an interface must be provided to turn off the PA system announcements. The fire alarm system microphone will have priority over alarm notification and emergency messages.]

Designer: Revise the language above (choose one or delete both if a horn system) to match project scope.

J. The FACP must include, per the drawings, programmable dry contact discrete outputs compatible with 120 VAC or 24 VDC and rated for 2 amps resistive switching loads. The fire alarm system must be configured to receive contact closure inputs from other systems such as the EVS, LCC remote IO, PA, etc., to place the FA system into a general alarm condition and other required responses.

K. The FACP must include, per the drawings, programmable and configurable discrete inputs which must accept 120 VAC, 24 VDC, or contact closure discrete input signals.

L. [Light rail tunnels: Where indicated on standpipe system drawings, the fire alarm system must be configured with necessary Intelligent Modules to activate standpipe systems upon signals from EVS/LCC. The FA system installer must coordinate with Systems and Fire Protection contractors to ensure that when required the FACP will send discrete output signals to dry standpipe relays to operate solenoid valves which will charge the standpipe systems.]

M. [Light rail stations: The fire alarm system must be compatible with the existing FireWorks Graphical Command Interface console located at the Link Control Center (LCC) to be integrated with existing system graphics, naming, and alarming.]

N. [Light rail stations: Ethernet interface ports, Lantronix modules or equal as accepted by the Sound Transit Specification Owner, must be provided in the FACP for interfacing with the LCC and backup LCC, and FireWorks station. Provide two (2) Lantronix modules for stations with fire control rooms and three (3) Lantronix modules for stations with a fire command center.]

O. [Light rail stations: Provide a FireWorks workstation at the fire command center (FCC). Note a Fireworks workstation is not required at stations that do not have an FCC.]

P. Fire system status must be available to be accessed via a FireWorks computer.

Q. Fire system status provided by the interface port must include all FACP status, supervisory, trouble, alarm, control, etc., information including:

1. Individual detector alarms.
2. Individual detector malfunction.
3. Zone alarms.
4. Manual pull station.
5. Flow switches.
6. Tamper switches.
7. Clean Agent system alarm and supervisory relay contacts on clean agent panel.
8. Elevator recall and/or shutdown.
9. FACP real time clock.
10. FACP system trouble.
11. Fire Door relays.
12. Paging System (PA) activation.
13. Intelligent modules.

R. Provide indication and control interface point list to integration contractor.

S. Support systems integration testing of FACP functions and interfaces.

2.03 OPERATIONS

A. The fire alarm system must be designed and tested to work with other systems as outlined in this specification and as required by the Contract.

2.04 MATERIALS

A. General Requirements:

1. All products in the system must be new and current products of the manufacturer's latest design and suitable to perform the functions intended, as listed under manufacturers.

2. Where two or more products are required to perform interrelated functions, they must be products marketed by one manufacturer.

3. All products having a similar or identical appearance or function must be products marketed by one manufacturer.

4. The system must include equipment, software, firmware, raceways, and wiring as required to provide a complete and operable system in full compliance with these Contract Specifications, the Issued for Construction Drawings, and requirements of the AHJ Fire Department.

5. All devices and/or equipment used in fire alarm control systems must have the UL 864 listing.

6. [Fire alarm panels must have the latest version of software with all patches and be password protected. Software must be compatible with FireWorks head end at the LCC. The factory default password must not be used.]

7. All devices and/or equipment must be listed for the environment that it will be installed. Components beneath canopies and in parking garages are considered an exposed exterior installation. Components not located within an enclosed room at the station are considered an exposed exterior installation. Panels and components located in enclosed but unconditioned rooms must be designed for the expected temperature and humidity of that space. The fire alarm designer must evaluate energy code sheets, when available, to determine which spaces are unconditioned.

B. Fire-Alarm Control Panel (FACP):

1. General Requirements for Fire-Alarm Control Panel:

a. Field-programmable, microprocessor-based, modular, power-limited design with electronic modules, complying with UL 864 (including UUKL when used for smoke control) and listed and labeled by an NRTL:

1) System software and programs must be held in flash electrically erasable programmable read-only memory (EEPROM), retaining the information through failure of primary and secondary power supplies.

2) Include a real-time clock for time annotation of events on the event recorder and printer.

3) Addressable initiation devices that communicate device identity and status, and where the installed devices have the capability:

a) Smoke detectors, including duct detectors, must additionally communicate sensitivity setting and allow for adjustment of sensitivity at fire-alarm control unit.

b) Heat detectors must additionally test for and communicate the sensitivity range of the device except weatherproof devices when technology is unavailable.

4) Addressable control circuits for operation of mechanical equipment.

b. Alphanumeric Display and System Controls: Arranged for interface between human operator at fire-alarm control panel and addressable system components including annunciation and supervision. Display alarm, supervisory, and component status messages and the programming and control menu:

1) Annunciator and Display: Liquid-crystal type, 2 line(s) of 40 characters, minimum.

2) Keypad: Arranged to permit entry and execution of programming, display, and control commands and to indicate control commands to be entered into the system for control of smoke-detector sensitivity and other parameters.

c. Programming

1) FACP device programming must be all capital letters and include the facility number, facility acronym, room/area number, and device type. Do not use symbols.

a) Example: E01 JPS P107 HEAT

d. Circuits:

1) Initiating Device, Notification Appliance, and Signaling Line Circuits: NFPA 72, Class B.

2) Except as outlined in this specification and the Contract, wiring must be Class B in accordance with NFPA 72. Notification and control circuits must be Class B with an end of line resistor on the last device on the circuit.

3) [Light Rail Stations: Circuits interconnecting distributed fire alarm control panels, NAC panels, relay panel, clean agent, and preaction panels must be Class A.]

4) [Enclosed Light Rail Stations: Notification circuits, 1 hour rated Class B or Class A (if approved by AHJ).]

Designer. See FLS Set 601 for survivability requirements and summarize it here or refer to drawing notes.

5) Install no more than 50 addressable devices on each signaling line circuit.

6) Serial Interfaces configurable to RS-232 or RS-485.

7) A single RS-232 serial port must be provided for a printer.

8) Programmable dry contact closures discrete outputs must be provided. Dry contact closure outputs must be reserved for

connection to the BMS. The Contractor must provide the input/output points indicated in the Building Management System Issued for Construction Drawings for transmission to the Contractor- provided Building Management System. The points must be wired and terminated in an interface terminal cabinet as shown on Issued for Construction Drawings.

9) Light Rail Stations: Dry contact closure discrete outputs must be reserved for connection to the EVS at the station I/O points identified on the EVS subset drawings.

10) Provide 20 percent spare capacity of each I/O type.

11) Light Rail Stations: The FACP must be configured so that a dry contact discrete input signal from the Link Control Center will put it into alarm or other appropriate state. This signal will be provided by a Sound Transit provided programmable logic controller. The Contractor must wire this point from the FACP and terminate in the interface cabinet. The purpose of this termination must be clearly labeled.

e. Elevator Recall:

1) Separate outputs from the fire alarm systems to the elevator controller(s) must be provided to implement elevator Phase I Emergency Recall Operation in accordance with Section 2.27 of ANSI/ASME A17.1/CSA B44, Safety Code for Elevators and Escalators, as required in NFPA 72.

2) Unless otherwise required by the authority having jurisdiction, only the elevator lobby, elevator hoistway, and elevator machine room smoke detectors, or other automatic fire detection as permitted by NFPA 72, must be used to recall elevators for fire fighters' service. Garages per NFPA 72. Each elevator bank must be recalled independent of other elevator banks.

3) Elevator lobby detectors located on the designated recall floor must be provided with an output to signal elevator recall to the alternate level.

4) Provide heat detectors in each elevator machine room to shut down elevator power (shunt trip) associated with the location prior to sprinkler activation except in Seattle where the SFD (Seattle Fire Department) Administrative Rule must be followed.

5) Provide heat detection adjacent to sprinkler heads in elevator shafts and pits as required.

6) Control circuits to shut down elevator power must be monitored for the presence of operating voltage. Loss of voltage to the control circuit for the disconnecting means must cause a supervisory signal to be indicated at the control unit and required remote annunciators.

f. Remote Smoke-Detector Sensitivity Adjustment: Controls must select specific addressable smoke detectors for adjustment, display their status and sensitivity settings, and change those settings. Allow controls to be used to program repetitive, time-scheduled, and automated changes in sensitivity of specific detector groups. Record sensitivity adjustments and sensitivity-adjustment schedule changes in system memory and print out the final adjusted values on system printer.

g. Fire Suppression Systems: Automatically transmit alarm, supervisory and trouble signals. Monitor flow and tamper devices.

h. FACP Operating Instructions: Provide concise printed instruction on how to acknowledge alarms, reset the FACP, and contact the central station monitoring that is laminated and adhered to the FACP enclosure or adjacent wall.

C. System Power Supply:

1. Primary Power: The fire control panel and remote power supplies must receive 120 VAC via a dedicated branch circuit per NFPA requirements.

a. Power Circuit Lockout Kit: Space Age Electronic Part Number ELOCK_FA, or other as accepted by the Sound Transit Specification Owner.

2. Secondary Power Supply:

a. Provide sealed gelled-electrolyte batteries as the secondary power supply for the fire alarm control panel and each system transponder. The battery supply must be sized to operate the system in a supervisory mode for 24 hours with no primary power applied and at the end of that period operate its alarm mode for a period of fifteen (15) minutes. Batteries must be sized using a factor of 1.3 times the calculated size to compensate for deterioration and aging during the battery life cycle. Batteries must be housed in the control cabinet or a separate cabinet with adequate cell separation to prevent accidental discharge. If housed in a separate cabinet, a fuse block must be provided within the battery cabinet.

b. Provide battery-charging circuitry for each standby battery bank in the system low voltage power supply or as a separate circuit. The charger must be automatic in design, adjusting the charge rate to the condition of the batteries. Chargers must be housed in the main fire alarm control panel or the battery cabinet. The charger must be capable of charging the batteries from 75 percent of full charge to 100 percent of full charge within 24 hours.

D. Manual Fire-Alarm Boxes:

1. General Requirements for Manual Fire-Alarm Boxes: Comply with UL 38 and NFPA 72. Pull boxes must be finished in red with molded, raised-letter operating instructions in contrasting color; must show visible indication of operation; and must be mounted on recessed outlet box. If indicated as surface mounted, provide manufacturer's surface back box:

a. Double-action mechanism requiring two actions to initiate an alarm (breaking-glass or plastic-rod type are not permitted) with integral addressable module.

b. Pull Station Reset: Key, Corbin Cat 30 or equal as accepted by the Sound Transit Specification Set owner.

E. Analog Heat Detectors:

1. Heat detectors, where used, must provide combination fixed temperature and rate-of-rise detection, rated at 135 degrees Fahrenheit or high temperature where applicable. The detector base must be of the twist-lock style and must be provided with an indicating light to verify operation, which must latch on in an alarm condition. Removal of the detector from its base must cause a system trouble signal. Devices utilizing pins, jumpers, or staples are not acceptable.

F. Analog Smoke Detectors, Photoelectric:

1. Light refraction technology smoke detectors must have a high rejection of false signals caused by electrical noise and electrical transients and must be capable of being checked for sensitivity without being removed from its twist-lock base. The reading of the detector sensitivity must yield a discrete electrical value for logging and tracking of status to determine the maintenance and cleaning requirements.

2. Detector bases are to be low-profile, twist-lock. Bases must be capable of installation on a 4-inch square or octagonal electrical outlet box. The detector base must be equipped with an indicating LED that must flash to indicate system communications and must change state to a steady "on" when the detector reaches the selected threshold for alarm and communicates that alarm to the system Removal of the detector from the base must cause a system trouble condition with and display a distinctive trouble code on the control panel display indicating the zone of the trouble condition.

3. Detectors must be capable of alarm verification and programmed for 30 second verification unless not allowed by code/standard.

G. Analog Duct Detectors:

1. Air Duct Smoke Detectors:

a. Duct smoke detectors and associated relay modules must be provided by the Fire Alarm Contractor and installed by the Mechanical Contractor in accessible locations. The wiring and connection of the duct smoke detector must be by the Fire Alarm Contractor.

b. Sampling photoelectric or ionization type for sensing of products of combustion within the air stream of ducted fan systems. The devices must include necessary sampling tube extensions and sensitivity adjustments for detection of products of combustion across the width of the duct.

c. The device must actuate upon nominal two (2) percent light obscuration per foot. Visual indication of normal and alarm/trouble must be incorporated into the exposed surface of the device. Two auxiliary contacts must be provided for connection to the mechanical control system. Activation of detector located on the return air intake of the air handler must result in shut down of the unit via the BMS and send a supervisory notification to the fire alarm control panel.

2. Detectors must be approved for use in environments as covered by FM, UL 268A, and UL 268. Detectors furnished must be available in the following configurations to serve all possibilities:

a. Low Velocity: As listed for use in HVAC duct detection applications of air velocities from 0 to 1200 feet per minute.

b. High Velocity: As listed for use in HVAC duct detection applications of air velocities between 500 and 4000 feet per minute.

3. Detector bases are to be low-profile, twist-lock type with screw clamp terminals and self-wiping contacts. Bases must be capable of installation on a 4-inch square or octagonal electrical outlet box. The detector base must be equipped with an indicating LED that must flash to indicate system communications and must change state to a steady "on" when the detector reaches the selected threshold for alarm and communicates that alarm to the system. The specified LED functions must indicate detector state whether the system is in the normal mode or the standby power mode. Removal of the detector from the base must cause a system

trouble condition with and display a distinctive trouble code on the control panel display indicating the zone of the trouble condition.

4. When actuated, duct-mounted smoke detectors and concealed fire detectors must activate a remote indicator light. Provide a separate remote indicator light for each detector. Locate the remote indicator light where it is readily seen. Provide a permanent placard proximate to the remote indicator light that identifies the location of the detector. Locate duct detectors in back-of-house (BOH) spaces where they are visible from the floor to eliminate the need for additional remote indicators.

H. General Requirements for Notification Appliances: Connected to notification appliance signal circuits.

1. Combination Devices: Factory-integrated audible and visible devices in a single-mounting assembly, including mounting accessories.

I. [Audible/Visible Combination Appliances (Horn/Strobes)]

1. Must have two selectable tone options of temporal 3 and non-temporal continuous pattern.

2. Must be field configurable and have at least 2 sound pressure settings and 4 candela settings up to at least 90 cd, LED, or xenon strobe light.

3. Must operate on 24 VDC nominal.

4. The horn-strobes must be field programmable without the use of special tools to provide slow whoop, continuous, or interrupted tones (Temporal Pattern).

5. The horn/strobes must provide a sound pressure level of 15 dBA above the average ambient sound level or 5 dBA above the maximum sound level, in accordance with IFC 907 and NFPA 72. Devices must be located and configured to provide a minimum sound pressure of 90 dBA in machine and equipment areas and 70 dBA in all other occupancies.

6. The horn strobes must meet or exceed the latest requirements of NFPA 72, ANSI 117.1 and UL 1971 (strobe) and UL 464 (horn).

7. Weatherproof versions must be NEMA 4x, IP 56 rated, or equal as accepted by the Sound Transit Specification Set owner.

8. Mounting Faceplate: Factory finished, white.

[Designer: For system layout purposes locate audible appliance (horn/speaker) using specification data and engineering analysis to achieve at least 70 dBA.]

Designer: Delete horn/strobes when not included in the design.

J. [Audible/Visual Combination Appliance _Speaker/Strobes.]

1. Speakers must operate at 25 and 70 VDC and have at least four field-selectable wattage settings.

2. Strobes must LED or Xenon and be field configurable with at least eight (8) field-selectable settings.

3. The speaker/strobes must provide a sound pressure level of 15 dBA above the average ambient sound level or 5 dBA above the maximum sound level, in accordance with IFC 907 and NFPA 72. Devices must be located and configured

to provide a minimum sound pressure of0 dBA in machine and equipment areas and 70 dBA in all other occupancies.

4. Speaker layout must be based upon ½ watt setting but adjusted in the field as needed to meet sound pressure requirements.

5. The speaker/strobe must meet or exceed the latest requirements of NFPA 72, ANSI 117.1 and UL 1971 (strobe) and UL 464 (speaker).

6. Mounting Faceplate: Factory finished, white.

7. Weatherproof versions must be NEMA 4x, IP 56 rated.

Designer Instruction: Delete speaker/strobes when not included in the design.

K. Visible Notification Appliances: Strobe lights comply with UL 1971, with clear or nominal white polycarbonate lens mounted on an aluminum faceplate. The word "FIRE" is engraved on the lens:

1. Rated Light Output: Must be field configurable and have at least 4 candela settings up to at least 90 cd. of LED or xenon strobe type.

2. For units with listed guards to prevent physical damage, light output ratings must be determined with guards in place.

3. Flashing must be in a temporal pattern, synchronized with other units.

4. Weatherproof versions must be NEMA 4x, IP 56 rated. Mounting Faceplate: Factory finished, white.

L. Remote Indicators:

1. Indicator (LED or lamp) for flush mounting in ceiling or wall. Normal condition must be compatible with area smoke detector indicators (i.e., illumination upon alarm, extinguish upon return to normal).

M. Addressable Interface Device (Intelligent Modules):

1. Description: Microelectronic monitor module, NRTL listed for use in providing a system address for alarm-initiating devices for wired applications with normally open and/or normally closed contacts, as required.

2. Integral Relay: Capable of providing a direct signal to equipment including an elevator controller to initiate elevator recall, to circuit-breaker shunt trip for power shutdown, or to equipment controller.

N. Remote annunciators

1. Provide remote annunciator(s) as shown on Issued for Construction Drawings and as required by the AHJ.

2. Annunciator must be compact and the most basic version available unless local control or microphone is shown on Issued for Construction Drawings or required by the AHJ.

3. Remote annunciators must be in conditioned space meeting the manufacturer’s environmental conditions (temperature and humidity).

O. Notification Appliance Booster Power Supply Panels

1. Self-contained 24 VDC power supply design to augment the alarm audible and visual alarm power requirements with UL 864 listing.

2. Supervise the connected circuit and provide trouble and supervisory alarm back to main FACP.

3. Internal power supply and battery charger, and internally mounted batteries.

4. Metal cabinet, hinged door with lockset.

5. Booster panels must be in a conditioned space meeting the manufacturer's environmental conditions (temperature and humidity).

P. Fire Alarm Communicator

Designer, ST prefers Mesh technology but Cellular is acceptable where Mesh signal is not adequate. Determine what type of technology best suits the location and facility based upon signal strength and interference with other systems. Identify the need for an antenna if required and confirm raceway has been identified for the cable between the communicator and the antenna. Note, Stations in the City of Seattle will be monitored by the LCC through SCADA and FireWorks.

1. Description: [Mesh Radio or Cellular Technology Communicator] with lockable metal enclosure for UL Listed central station monitoring. UL 864 Listed

2. Locate the communicator adjacent to the main fire alarm control panel in a conditioned environment meeting manufacturer's environmental condition.

3. Internal batteries and charger to serve as secondary power supply.

4. Communicator to be furnished by the central station monitoring company to ensure compatibility.

Q. Wire and Cable:

1. Wiring must be in accordance with local, state, and national codes (e.g., NEC article 760) and as recommended by the manufacturer of the fire alarm system. The installation of all pathway wiring, cable, and equipment will be in accordance with NFPA 70 National Electric Code (NEC), NFPA 72, and NFPA 130 for stations. All conductors must be insulated.

2. All fire alarm circuit wiring will be in minimum 3/4-inch conduit, unless otherwise noted, separate from telecommunications conduit or pathway systems. Conduit must be in accordance with the NEC, local and state requirements. Conduit fill must not exceed 40 percent of the interior cross-sectional area where three (3) or more cables are contained within a single conduit.

3. Cable/conductor must be rated for the application and the environment it is installed.

4. [Enclosed Light Rail Stations: Wire/cable must be 90C, rated for wet environment, and UL 1685 and NFPA 262 or FT4/IEEE. Wire/Cable for smoke control must be UL 2196 or protected in accordance with NFPA130. RHW-2-LSZH, XHHW-2-LSZH or other as accepted by the Sound Transit Specification Owner.]

5. [Open Light Rail Stations: Wire/cable must be 90C, rated for wet environment. RHW-2, XHHW-2, or others as accepted by the Sound Transit Specification Owner.]

6. [Garages: Wire and cable must be 75C, rated for wet environment. RHW, THHN/THWN, XHHW, or others as accepted by the Sound Transit specification owner.]

7. [OMF and other conditioned facilities: Wire and cable must be 75C temperature rated. RHW, THHN, THWN, and FPLP or others as accepted by the Sound Transit specification owner.]

8. Conductor pairs must be twisted and of two colors.

9. Conductors must be color coded using a distinct color for each circuit type.

10. Signal/detection/data circuits must be 16, or 14 AWG. Notification and power circuits must be 16, 14, or 12 AWG.

R. Panel Labels:

1. Panel indicating lights and controls must be permanently labeled as to their function.

S. Addressable Field Device Labels

1. Field device labels must be adhered to the device in a location or method that does not affect operation and maintenance, be visible from the floor, UV resistant, weather resistant for unconditioned environments, and 3/4-inch in height with 1/2 -inch red or black text.

2. Labels must include the facility number (e.g., E15) and device type (e.g., HEAT) and be consistent with system programming.

T. Back Boxes:

1. Provide weatherproof back boxes for exterior or unconditioned space. All back boxes including pendant mounted devices must be completely weatherproof to meet NEMA 4, IP 66 rating. Raceway penetrations must be sealed.

U. Fire Alarm Documents Storage Cabinet

1. Provide fire alarm documents storage cabinet adjacent to main fire alarm panel per NFPA-72.

2. Coordinate location with Architect or Owner prior to installation.

3. Manufacturers: Space Age Electronic Part Number SSU00685 or equal as accepted by the Sound Transit Set owner.

V. Fire Alarm Terminal Cabinets and Auxiliary Cabinets

1. Enclosures shall be NEMA Type 1 or Type 12, UL 50. Minimum size is 12x12x6 inches. Size to provide 40 percent spare capacity. The box and front shall be steel and painted to match the wall in finished areas. Manufacturers: Hoffman or other as accepted by the Sound Transit specification owner.

2. Fire alarm terminal cabinet shall be labeled with a riveted or screwed laminated plastic nameplate indicating “FIRE ALARM TERMINAL CABINET” in 1/4-inch white letters on a red background.

3. Terminal blocks shall be sized to accommodate wire from 19 gauge to 10 gauge. Terminal blocks are to be Allen Bradley 1492-W6 or W10 or Entrelec M4/6, with associated partitions, barriers, stops, and rail, or other as accepted by the Sound Transit specification owner.

4. Each terminal must be provided with a circuit identification marker.

PART 3 - EXECUTION

3.01 INSTALLATION

A. The installation of the system must meet all requirements of the referenced codes and standards, in particular NFPA 70, NFPA 72, [and NFPA 130 (Light Rail Stations only)], as well as all local requirements.

B. Detection and notification devices must be mounted on walls, ceilings and other locations as indicated in the drawings and in accordance with NFPA 72 and manufacturer requirements:

1. [For public areas of stations and garages, locate detection and notification devices above the touch zone (9 ft above the floor), or 96 inches to the top of the lens for wall mounted visual devices per NFPA 72, to prevent vandalism.]

2. [Garages: Notification devices at the rooftop level must be placed for direct viewing. Notification devices in parking areas at other levels must be ceiling or pendant mounted along the drives, and may be wall, ceiling or pendant mounted at elevator lobbies, rooms, and other areas.]

3. [Other facilities: Wall-mounted notification devices must be installed at 80 inches above finished floor measured to the bottom of the device.]

C. Ceiling mounted devices/appliances must be centered on ceiling panels and tiles that are up to 2 x 4 feet in dimension. For larger panels/tiles, center device in one direction and locate them in ¼ intervals only when necessary to meet coverage requirements.

D. Circuit breakers in the panels feeding the fire alarm control panel must be labeled and fitted with suitable guard, such that the breaker cannot be turned off, but fixed so the breaker can trip and requiring the removal of a screw to remove the guard. Separate breakers must be provided for each control panel main power circuit.

E. Conduit must enter the panel per the manufacturer instruction and must not enter bottom of FACP or interfere with batteries.

F. [Stations only: Raceways, junction boxes and appurtenances required to support the fire alarm system must be hidden from view by locating them in an organized manner within chases. All raceways and chases must provide reasonable access. All raceways must accommodate future conductors and all chases must accommodate future raceways. Raceways and chases must be designed to deter bird roosting. No raceways may be installed exposed to view in public areas of the stations. Exposed raceways and any junction boxes must be installed in an organized manner, tight to adjacent surfaces, except as required to accommodate seismic movement, and must be painted to match those surfaces.]

G. Cable/conductors must be solid copper and of the type and size specified in this specification or as required to meet the voltage drop requirements of the circuit. Stranded wire/cable is permitted when solid is unavailable.

H. Ground fire-alarm control panel and associated circuits; comply with IEEE 1100 and as required by the Contract. Install a ground wire from main service ground to fire-alarm control panel.

I. All non-power-limited and power-limited signaling system circuits entering a building must be provided with transient protection in accordance with NFPA 70 and NFPA 72.

J. Junction boxes and cover plates containing fire alarm circuits must be painted red.

K. Duct Detector Remote Indicators: Provide on walls at a height of 96 inches in an adjacent area where readily visible for all concealed duct detectors.

L. Smoke detector spacing must be in accordance with the listed spacing, the manufacturer's recommendations and the requirements of NFPA 72. Detectors must not be located within 5 feet of an air supply register or within 12 inches of a fluorescent lighting fixture. Duct detectors must be located to comply with NFPA 72.

M. Visual Notification Devices:

1. Locate to meet the requirements of NFPA 72 for indirect viewing.

2. For garage rooftops, open station platforms, and other outdoor locations, locate devices for direct viewing, as practical.

N. Interface Devices:

1. Make addressable connections with a supervised interface device to the following devices and systems. Install the interface device less than 3 feet from the device controlled. Where it is impractical to locate within 3 feet, a greater distance is permitted if the wire between the interface device and the monitored/controlled equipment is supervised for continuity:

a. Duct and spot smoke detectors utilized for HVAC shutdown.

b. Smoke detectors utilized for smoke, or combination fire-smoke damper(s).

c. Connection to elevator recall system and components.

d. Connection to fire suppression systems.

e. Connections at valve supervisory switches.

f. Flow or pressure switch of each sprinkler system.

g. Supervisory connections at elevator shunt trip breaker.

h. Emergency radio supervision.

i. [Smoke control, fire pump, emergency generator supervision and control when provided].

j. Other interfaces as shown on Issued for Construction Drawings or required by code.

2. Relays and other devices to be mounted in auxiliary panels are to be securely fastened to avoid false indications and failures due to shock or vibration.

O. Field Addressable Device Labels

1. Field addressable device labels must be provided prior to any system testing.

P. Fire Alarm Communicator

1. Communicator to be furnished by the central station monitoring company to ensure compatibility and installed by the fire alarm contractor.

Q. Wiring:

1. Within Sub-panels: Must be arranged and routed to allow accessibility to equipment for adjustment and maintenance.

2. Each conductor/cable must be identified as shown on Issued for Construction Drawings with wire markers at every splice and terminal point. Mark both ends to indicate the circuit with alphanumeric wire markers.

3. Each terminal in control panels, power supply panels, and terminal cabinets must be identified with alphanumeric markers to identify the circuit.

4. [Light Rail Stations: Except as outlined in this specification, wiring must be Class B in accordance with NFPA 72. Notification and control circuits must be Class B with an end of line resistor on the last device on the circuit.]

5. [Light Rail Stations: Circuits interconnecting distributed fire alarm control panels, NAC panels, relay panel, clean agent, and preaction panels must be Class A.]

6. [Enclosed Light Rail Stations: Notification circuits, 1 hour rated Class B or Class A (if approved by AHJ).]

Designer. See FLS Set 601 and NFPA 72 for survivability requirements and summarize it here.

7. [Garage and OMF facility wiring must be Class B in accordance with NFPA 72. Control circuits must be Class B with an end of line resistor on the last device on the circuit.]

8. Wiring for the fire alarm system must be kept physically and electrically separate from all other power and signal system wiring in accordance with NFPA 70 and NFPA 72.

9. Provide wire/cable and power supplies of sufficient size to minimize voltage drop consistent with the proper operation of all devices.

R. Auxiliary Controls:

1. Smoke and/or heat detectors utilized for HVAC shutdown, smoke or fire-smoke dampers and elevator shunt-trip must be connected to the fire alarm system. Control Circuits supervised (subject to NFPA 72 requirements) may be incorporated into the fire alarm raceway system, except that limited energy circuits must be routed separately from line voltage circuits as required by the National Electrical Code (NFPA 70).

3.02 CONSTRUCTION

A. System Operation:

1. Activation of any single alarm initiating device (pull station, smoke detector, water-flow switch, heat detector, etc.) must cause the following actions and indications:

a. Initiate a full alarm signal at the FACP.

b. Indicate the fire device and/or fire zone in alarm on the FACP.

c. Initiate building evacuation alarm signaling or as otherwise programmed.

d. [Light rail Stations: Report system status to the LCC through the EVS and FireWorks connection.]

e. Report system status to a UL Listed Central Station. [Exception: Light rail stations in the City of Seattle need only report to the LCC.]

2. Activation of a duct detector or damper smoke detector must initiate a system supervisory condition at the FACP and initiate a fire alarm control relay for shutting down the HVAC unit and closing of the damper.

3. Activation of any supervisory condition causing device must initiate a supervisory alarm signal at FACP and transmit the trouble condition to the EVS/LCC. [Exception: Light rail stations in the City of Seattle need only report to the LCC.]

4. Any system trouble caused by wiring failure including open circuits, grounded circuits and shorted circuits on circuitry required to be supervised in this manner; communications loss, device removal, battery low voltage, power loss, charger failure or failure in any device must cause the following actions and indications:

a. Initiate a fire alarm system trouble signal at the FACP.

b. Transmit the trouble condition to the Central Station and the LCC. Exception: Light rail stations in the City of Seattle need only report to the LCC.

5. Provide signal silencing for alarm, trouble, and supervisory signals at the FACP. Subsequent alarm receptions must cause the alarm signals to resound indicating the receipt of a new alarm condition. The signals must also be caused to resound by the re-operation of the signal silence switch allowing evacuation signaling from the silence switch without keyboard commands when an alarm condition exists.

B. Provide a test button to isolate the FACP from the central station and LCC.

3.03 FIELD QUALITY CONTROL

A. Test Equipment:

1. Provide all test equipment, instruments, tools, and labor required to conduct the system tests.

2. The installer must use test instruments that bear a valid calibration stamp showing date of calibration and the expiration date of the stamp. Calibration and accuracy of test instruments must be certified by an independent testing laboratory having standards traceable to the National Institute of Standards and Technology:

a. All alarm and control functions.

b. All trouble and supervisory functions.

c. Transfer to battery power.

B. Acceptance Testing:

1. Perform commissioning of fire detection and alarm system per the approved test plan outlined in this specification and as required by the Contract. (See submittals).

2. Systems or portions of a system may be tested and accepted at separate times during construction, however, fire alarm panel programming must be finalized before testing begins.

3. Testing must be completed prior to testing with the AHJ, except system integrated testing may be deferred until other systems are commissioned and tested.

4. The installer must be responsible for acceptance testing in accordance with the test plan. See submittals in this specification [and refer to Specification 28 08 31 – Commissioning of Fire Detection and Alarm for commissioning of fire detection and alarm requirements.]

5. The installer must confirm programming, as outlined in sequences of operation, functions as designed. Each specific function including integrated fire protection and life safety systems performs as design and the tests documented.

6. A complete listing of all initiating devices with facility code, device address, device type, device location and alphanumeric description as programmed into the system must be prepared prior to beginning acceptance testing.

7. The installer's acceptance inspector must use the approved test plan, system record drawings, in combination with the documents specified in this specification and as required by the Contract, during the testing procedure to verify operation as designed.

8. The installer must include step-by-step procedures and allowances for performance testing every fire alarm device and system output to demonstrate functionality in accordance with commissioning of fire detection and alarm requirements as required by the Contract, and AHJ Fire Department requirements.

9. [Each individual fire alarm initiating device which activates any portion of the smoke control system will be verified to provide all applicable output functions.]

10. Test failures will be recorded in a log specific to fire alarm and retested until the test passes. Failure, retest, and pass dates with notes must be recorded.

11. System wiring must be tested to demonstrate correct system response and correct subsequent system operation in the event of:

    a. Open analog loop

    b. Shorted analog loop.

    c. Grounded analog loop.

    d. Open communication link.

    e. Shorted communication link.

    f. Grounded communication link.

    g. Open zone wiring.

    h. Grounded zone wiring.

    i. Open signal circuit wiring.

    j. Shorted signal circuit wiring.

    k. Grounded signal circuit wiring.

    l. Initiating device removal.

    m. Battery disconnected.

n. Primary power disconnected.

o. Other as recommended by the manufacturer.

12. System evacuation alarm notification must be demonstrated as follows:

a. All notification devices actuate as programmed.

b. Sound pressure by providing marked up shop drawings showing ambient and alarm sound pressure for every space of the facility at five (5) feet above the floor. For large rooms and open areas, a test point must be shown every 20 feet in two directions to form a grid. In rooms, test at a remote location furthest away from the audible device. Record average ambient sound level.

c. Emergency voice messages must be intelligible and must be compliant with NFPA 72 EVACS requirements.

d. Visual notification by confirming device location and setting matches shop drawings.

13. System indications must be demonstrated as follows:

a. Correct message display for each alarm input.

b. Correct annunciator light for each alarm input.

14. System charging current must be normal trickle charge for a fully charged battery bank.

15. Demonstrate satisfactory operation to commissioning agent as required by the Contract.

16. Installer must participate in integrated system testing as outlined in the test plan and as required by the Contract to demonstrate fire alarm interfaces with other building systems until those interfaces function properly for all applicable building systems as follows:

a. [Clean agent fire suppression systems].

b. Water-based fire suppression systems including dry valve components.

c. Standpipe systems.

d. Elevator detection and fire recall systems.

e. Duct smoke detectors.

f. Tamper switches.

g. Control of fire dampers, fire/smoke dampers.

h. Monitoring the BMS, EVS, PA, emergency radio and other building control and monitoring systems.

i. Emergency ventilation and smoke control systems.

j. Other controlled or monitored equipment as indicated in the fire alarm sequence of operation matrix, drawing notes, and as required by the Contract.

C. Certification:

1. The manufacturer's representative must submit a cover letter with the completed test plan stating they have tested the system and found it acceptable in all respects.

D. Fire Department Acceptance:

1. In addition to the testing and commissioning in this specification and system commissioning specified in 28 08 31 - Commissioning of Fire Detection and Alarm, , the installation must be approved and accepted by the AHJ Fire Department. Approval by the Fire Department alone is not a substitute for a completed TP.

E. Training:

1. The installer must furnish training to a minimum of four (4) Sound Transit employees as follows:

a. Training in the receipt, handling, and acknowledgment of alarms.

b. Training in system operation including manual control of output functions from the system FACP.

c. Training in the testing of the system including logging of detector sensitivity, walk test of devices and response to common troubles.

d. Training in the system's programming, including writing program logic modules, entering into the software, and uploading and downloading the program to the system.

e. The total training requirement must be at least 4 hours and sufficient to cover all items specified.

F. Project Closeout:

1. System documentation must be furnished to the Resident Engineer and must include but not be limited to the following:

a. System record drawings and wiring details reflecting all field changes including one (1) set of reproducible masters Shop and Issued for Construction Drawings in CAD (.dwg), .pdf, and hard copy format.

b. System record data, including complete listing of device and circuit addresses, identifiers and labels, input and output correlation reports, and program database. This data must be printed and provided with projecting labeled dividers between data sets, loose leaf bound and labeled as system record data. All required data must also be provided in electronic format on portable media enclosed with the bound record data.

c. System operation, installation, maintenance, and programming manuals.

d. System menu-driven instructions with pass codes for the alteration, addition or deletion of devices, zones, modification, addition or deletion of zone messages and the modification, deletion or addition of logic modules as required for system operation and maintenance.

e. Documentation of system voltage, current and resistance readings taken during the installation, testing and ATP phases of the system installation.

f. Certification letter accompanied by a completed and signed test plan.

g. Provide USB memory stick of program data in fire alarm panel as required by NFPA-72.

h. Clean-up of installation site to the satisfaction of the Owner's representative NFPA 72 Record of Completion form completed.

i. [Additional requirements outlined in commissioning specifications.}

G. Fire Watch

1. For fire alarm system replacement projects, the contractor must provide a fire watch when the system is out of service.

2. When the system is complete and approved by the AHJ and placed in service, the system must remain active and monitored by a central supervisory station. If the system is impaired or taken out of service, a fire watch must be provided by the contractor.

END OF SECTION

SECTION 31 11 00

CLEARING AND GRUBBING

PART 1 - GENERAL

1.01 SUMMARY

A. Section includes

1. Requirements for clearing, grubbing, and disposing of vegetation, including bushes, brush, trees, stumps, roots, rubbish, refuse, trash, and debris within construction limits.

2. Requirements for pruning of existing trees which overhang the track.

1.02 REFERENCES

A. This Section incorporates by reference the latest revisions of the following documents:

1. Authority Having Jurisdiction (AHJ):

a. Standard plans and specifications.

2. Washington State Department of Transportation (WSDOT):

a. Standard Specifications for Road, Bridge, and Municipal Construction.

B. Definitions

1. Clearing: Removing and disposing of all unwanted material from the surface.

2. Grubbing: Removing and disposing of all unwanted vegetative matter from underground.

1.03 COORDINATION

A. Contractor must hold a preconstruction meeting to discuss the approved Construction Work Plan (CWP). The CWP must address hold points, schedule of work and related approved submittals.

B. Prior to commencing any work, Contractor must provide minimum of 30 days notice to schedule meeting(s) with Resident Engineer to discuss the work plan and schedule.

C. Contractor must obtain required permit(s) for the work from AHJ.

D. Identify clearing and grubbing limits:

1. Prior to starting clearing and grubbing, identify and protect all existing trees, brushes, shrubs, or other objects selected to remain.

1.04 SUBMITTALS

A. Submit:

1. Qualifications for Chemical Applicator: The applicator must be licensed by the State of Washington for the class of pesticide utilized. Submit evidence that all operators are licensed in the State of Washington.

2. Integrated Pest Management Plan (IPM): Submit an Integrated Pest Management Plan prior to clearing and grubbing chemical applications activities. The plan must include the plants or trees to be sprayed for insect pests and to be pruned, a sketch showing all IPM areas, and the Sound Transit Pesticide Request Form. Submit request to receive the latest version of the pesticide form from Sound Transit Environmental team:

    a. Contractor must include an evaluation of invasive plant species control procedure(s) in the IPM plan.

    b. Contractor must map noxious or invasive plant species.

    c. Contractor must provide approved preventative measure(s) to stop spreading of the noxious or invasive species in the project area through roots, rhizomes, stems, or other means during clear and grub operation.

3. Product Data for Chemical Pesticides: Submit manufacturer's literature, copy of current labels, including toxicity levels, for each pesticide, herbicide, fungicides, and spray adjuvant proposed to be used. Submit a copy of the Material Safety Data Sheet (MSDS) and manufacturer's recommendations for each pesticide to be used. In addition, submit evidence that the pesticide is registered in the State of Washington.

PART 2 - PRODUCTS

2.01 MATERIALS, EQUIPMENT, AND FACILITIES

A. Fungicide and Pesticide: Acceptable to the Department of Ecology and approved by the Resident Engineer before application.

2.02 INTEGRATED PEST MANAGEMENT AND PESTICIDE APPLICATIONS

A. Integrated Pest Management Plan (IPM):

1. Employ the principles of Integrated Pest Management (IPM). Limit application of any pesticide and herbicide through healthy landscape management practices.

B. Pesticide Application:

1. Pesticides: Pesticides include all herbicides, insecticides, fungicides, and various other substances used to control pests and weeds. All pesticide applications must be preceded by monitoring and positive pest identification. Submit these findings to the Resident Engineer prior to any pesticide application.

2. Application Approval: Contractor must request Sound Transit for the latest Sound Transit Pesticide Request form, fill out and submit for approval. The Resident Engineer must review and approve the pesticide use prior to application.

3. Weather: All pesticides must be EPA approved, and applied during dry weather by a licensed Washington State Pesticide Applicator or Operator in accordance with the label directions. Post all applications in accordance with Washington State Department of Agriculture regulations for 24 hours after application.

4. Appropriate Pesticides: Verify that pesticides are appropriate for use with the respective plant materials. Contractor is responsible for damages incurred as a result of applications and must repair or replace such damage.

PART 3 - EXECUTION

3.01 PREPARATION

A. Prior to performing any work, place temporary erosion and sediment control measures as required by the Contract.

B. Prior to clearing and grubbing operations, notify the Resident Engineer at least one (1) week in advance of planned activities.

C. Make work sites available to Sound Transit's Archaeologist for observation, and notify the Resident Engineer when artifacts are discovered during operations.

D. Clear and restore areas used for the Contractor's convenience; restore areas to original condition providing mulching, seeding, and planting as required in accordance with the issued for Construction Drawings and requirements of the Contract.

E. Protect survey markers, monuments, existing improvements, piezometers, observation wells, and adjacent properties from removal and damage.

F. Protect trees, lawns, and planted areas that are indicated to remain and are not in conflict with work shown on the issued for Construction Drawings. Restore all on-surface disturbed areas to a condition satisfactory to the Resident Engineer.

G. Review with the Resident Engineer, the clearing location, limits, and methods to be used before operations commence.

H. Completely remove trees identified for removal , including the roots, unless the Resident Engineer determines that complete removal is not necessary. In such cases, cut the trunk at ground level and treat with an approved herbicide. Contractor must take ownership of the removed trees unless otherwise noted by the Resident Engineer.

I. Care of Existing Trees: Protect and preserve trees and plants to remain as required by the Contract .

J. Inspect trees and surrounding areas for adverse conditions that may impede or adversely affect the Work, such as overhead wires, wind conditions, soundness, and strength of tree. Notify the Resident Engineer of adverse conditions. Do not proceed with pruning until directed by the Resident Engineer.

3.02 CLEARING AND GRUBBING

A. Clear and grub only within the limits indicated on issued for Construction Drawings unless otherwise required by the Contract.

B. Remove stumps and roots completely in excavation areas and under embankments, where the original ground level is within 3-1/2 feet of subgrade or slope of embankments. Under embankment, where the original ground level is more than 3-1/2 feet below the subgrade or slope of embankment, cut off trees, stumps, and brush to within 6 inches of the ground.

C. Do not commence earthwork operations in areas, where clearing and grubbing are not complete. Stumps and roots may be removed concurrently with excavation.

D. Protect and Prune Existing Trees:

1. Perform pruning of existing trees prior to commencing earthwork or trackwork construction. Contractor must prevent debris from tree pruning from falling on completed subgrade, ballast, or track or fouling ditches.

2. Where "Protect and Prune Existing Trees" is indicated on the issued for Construction Drawings, Contractor must trim tree branches that extend within 25 feet horizontally of the railroad track to attain a clear height of 26 feet over the rails. Contractor must trim around the entire circumference of the tree, in order to prevent the tree from becoming unbalanced and in jeopardy of falling due to the unbalanced weight of un-pruned branches.

3. Comply with WSDOT Standard Specification 1-07.16(2) for the following:

a. Saving existing vegetation when shown on issued for Construction Drawings.

b. Replacement of damaged vegetation.

c. Saving large roots of trees designated on the issued for Construction Drawings.

E. Where the work requires the placement of wood chip mulch, comply with WSDOT Standard Specification Section 8-02.3(11)B or AHJ requirements.

3.03 REMOVAL OF CLEARED AND GRUBBED MATERIALS

A. Cleared and grubbed materials become the Contractor’s property. Remove such materials from work site monthly at a minimum or as required by the Contract, so their presence must not create hazardous conditions for workers and the public. Stockpile salvaged materials in a secured location.

B. Comply with AHJ requirements over handling, removal, hauling, and disposal of materials.

C. Do not burn or bury materials.

3.04 RESTORATION

A. Restore disturbed areas to their original conditions or better in accordance with WSDOT Standard Specification Section 1-05.6 or AHJ requirements.

END OF SECTION

SECTION 31 20 00

EARTH MOVING

PART 1 - GENERAL

1.01 SUMMARY

A. Section includes:

1. Requirements for excavation, subsurface extraction, subgrade preparation, backfill placement, and finish grading.

1.02 REFERENCES

A. This Section incorporates by reference the latest revisions of the following documents:

1. American Society for Testing and Materials (ASTM) International:

a. ASTM C131 Standard Test Method for Resistance to Degradation of Small-Size Coarse Aggregate by Abrasion and Impact in the Los Angeles Machine.

b. ASTM C136 Standard Test Method for Sieve Analysis of Fine and Coarse Aggregates.

c. ASTM C535 Standard Test Method for Resistance to Degradation of Large-Size Coarse Aggregate by Abrasion and Impact in the Los Angeles Machine.

d. ASTM D1557 Standard Test Methods for Laboratory Compaction Characteristics of Soil Using Modified Effort (56,000 ft-lbf/ft3).

e. ASTM D2216 Standard Test Methods for Laboratory Determination of Water (Moisture) Content of Soil and Rock by Mass.

f. ASTM D2487 Standard Practice for Classification of Soils for Engineering Purposes (Unified Soil Classification System).

g. ASTM D6938 Standard Test Method for In-Place Density and Water Content of Soil and Soil-Aggregate in Place by Nuclear Methods (Shallow Depth).

h. ASTM D2974 Standard Test Methods for Moisture, Ash, and Organic Matter of Peat and Other Organic Soils.

i. ASTM D3017 Standard Test Method for Water Content of Soil and Rock in Place by Nuclear Methods (Shallow Depth).

j. ASTM D4318 Standard Test Methods for Liquid Limit, Plastic Limit, and Plasticity Index of Soils.

2. Washington Administrative Code (WAC):

a. WAC 296-155 Part N, Safety Standards for Construction Work, Excavation, Trenching and Shoring.

b. WAC 173-303 Dangerous Waste Regulations.

c. WAC 173-340 Model Toxics Control Act – Cleanup.

d. WAC 173-350 Solid Waste Handling Standards.

3. Washington State Department of Ecology:

a. Publication 10-09-057 Guidance for Remediation of Petroleum Contaminated Sites.

b. Publication No. 09-09-047: Guidance for Evaluating Soil Vapor Intrusion in Washington State: Investigation and Remedial Action.

4. Washington State Department of Transportation (WSDOT):

a. Standard Specifications for Road, Bridge, and Municipal Construction.

5. Authority Having Jurisdiction (AHJ):

a. Standard plans and specifications.

B. Definitions:

1. Excavation: Work involves earth moving and grading for the construction of buildings, bridges, landscaped areas, trackways, roadways, walkways, and other facilities.

2. Subsurface Extraction: Work involves removal of abandoned utilities, tanks, walls, foundations, and other below grade obstructions that interfere with the new construction. Work may also include the cleaning of such structures, if they are indicated on the issued for Construction Drawings to be salvaged.

3. Structure Backfill: Work includes furnishing, placing, and compacting structural fill material around structures to the lines and grades indicated. Structural fill material includes borrow excavation and material.

4. Finish Grading: Work includes furnishing, placing, and compacting of structural fill material on a subgrade to its new elevation indicated. Structural fill material includes borrow excavation and material.

5. Recycled or Reclaimed Material: Materials including, but not limited to aggregate, recycled concrete, and asphalt blends or mixes.

1.03 COORDINATION

A. Contractor must hold a preconstruction meeting to discuss the approved Construction Work Plan (CWP). The CWP must address hold points, schedule of work, related approved submittals.

B. Prior to commencing any work, Contractor must provide minimum of 30 days notice to schedule meeting(s) with Resident Engineer to discuss the work plan and schedule.

C. Contractor must obtain required permit(s) for the work from AHJ.

1.04 SUBMITTALS

A. Submit:

1. Submit Material(s) sources, test results, such as moisture content and compactness, and certifications for approval and compliance with specifications.

2. If on-site or Recycled or Reclaimed material is proposed for use as any of the materials specified in Contract, submit test results certifying suitability of the on-site material. Perform sampling and tests of the on-site material suitability per Section 9-3.7 of the WSDOT Construction Manual or at the request of the Resident Engineer.

3. Submit Material Use Report cumulatively to the Resident Engineer for review on a monthly basis. Report must include the following:

   a. Source of material used (import, recycled, reclaimed and on-site).

   b. Location and original source of each type material placed.

   c. Tests results for the material placed.

4. Quality Control Plan.

B. Transmit:

1. Qualifications of Independent Testing laboratory.

2. Qualifications of Material sources.

1.05 QUALITY ASSURANCE

A. Engage an approved independent soils testing laboratory to perform tests for material acceptance sampling and testing.

B. Tolerances:

1. Construct finished surfaces to plus or minus 1/2 inch of the elevations indicated on the issued for Construction Drawings.

2. Maintain the moisture content of fill material as it is being placed, within 2 percent of its recommended moisture content.

PART 2 - PRODUCTS

2.01 MATERIALS

A. Material(s) used (imported or native) for filling and backfilling construction must be in accordance with the Contract requirements.

B. Use inert, inorganic soil, free of deleterious substances for fill and backfill. Inorganic soil is soil containing less than three percent by dry weight of organic material when tested in accordance with ASTM D2974. Compact Fill and backfill thoroughly without voids when watered and rolled.

C. Excavated on-site material must be considered suitable for fill, backfill, and embankment construction, if the material is free from organic matter and other deleterious substances and conforming to the requirements specified in this specification. Material must meet Reuse Criteria, be conditioned for reuse and properly stockpiled. Conditioning includes spreading material in layers less than or equal to 8 inches, and raking free of debris and rubble. Remove deleterious material and rocks exceeding 6 inches in largest dimension from the site and dispose in accordance to Contract requirements.

D. For structural fill, select from suitable on-site excavated material meeting the requirements of Section 9-03.14(1), Gravel Borrow of the WSDOT Standard Specifications; otherwise, import material conforming to Section 9-03.14(1), Gravel Borrow of the WSDOT Standard Specifications.

E. Do not use material containing peat, muck, swampland, buried logs, stumps, or other contamination for structural fill.

F. Do not use material containing wood, organic waste, coal, charcoal, or other contamination for non-structural fill.

G. Use WSDOT Standard Specification Sections 2.03.3(14)J and 2.03.3(14)K for fill materials not specified in the Contract.

H. Comply with WSDOT Standard Specifications, Section 9- 03.9 for aggregates for crushed surfacing and roadway ballast.

2.02 SOURCE QUALITY CONTROL

A. Approved Independent Testing Laboratory must verify and test fill and backfill materials (including soil, Recycled or Reclaimed Materials) proposed to be used for construction and as follows:

1. For compliance with WSDOT Standard Specification, Section 9-03.20 and the following ASTM Standards:

a. Moisture-Density Relationship: ASTM D1557.

b. Moisture Content: ASTM D2216.

c. Liquid Limit: ASTM D4318.

d. Plastic Limit and Plasticity Index: ASTM D4318.

e. Percentage of Wear: ASTM C131 or C535 as applicable.

f. Sieve Analysis: ASTM C136.

2. For compliance with Reuse Criteria as required by the Contract:

a. Arsenic, cadmium, lead, mercury, chromium as total and Toxicity Characteristic Leachate Procedure metals (EPA 6000/7000 series and 1311).

b. Volatile organic compounds (EPA 8260D).

c. Total petroleum hydrocarbons, Gasoline, diesel and oil-range (NWTPH-Gx and NWTPH-Dx).

d. Polynuclear aromatic hydrocarbons (8270SIM).

e. Based on the source of the materials or specified in the Contract, the material could have known or suspected other hazardous or Contaminated Substances present.

B. Perform laboratory tests by the approved Independent Testing Laboratory where classification of soils is necessary to meet specified requirements in accordance with ASTM D2487.

C. Provide samples of structural fill as requested by the Resident Engineer.

PART 3 - EXECUTION

3.01 EXAMINATION

A. Establish bench marks, grading stakes, and other markers as required.

B. Existing Utilities:

1. Verify on site the location and depth (elevation) of existing utilities and services, before performing earth moving work. Perform excavation work by hand, when excavating within 3 feet of an active utility line. Protect active utilities from potential damage created by operation.

2. Remove abandoned utilities and plug ends, when encountered during earth moving.

3. Report immediately the discovery of active utility lines, which are not indicated on the issued for Construction Drawings, to the Resident Engineer and utility owners involved. Provide the Resident Engineer and utility owners free access to determine the measures deemed necessary to repair, relocate, or remove the utility.

3.02 PREPARATION

A. Provide erosion protection and environmental controls as required by the Contract.

B. Clear and grub areas as indicated on the issued for Construction Drawings.

C. Perform demolition as indicated on the issued for Construction Drawings.

3.03 CONSTRUCTION

A. General Requirements:

1. Provide erosion protection and environmental controls as required by the Contract.

2. Regulate construction traffic by dispersing travel paths of construction equipment over the entire width of compacted surface, in order to achieve a uniform loading. Protect exposed soil layers with high moisture content from excessive wheel loads.

3. Do not excavate or remove from the project site or right-of-way any material, which is not within the designated excavation as indicated on the issued for Construction Drawings, without written authorization from the Resident Engineer.

4. Excavate and remove materials outside the limits of the excavation, only if they are unstable and may potentially slide during operation. Maintain slopes and embankments until substantial completion and acceptance of the work.

5. Promptly repair slides, slipouts, washouts, settlements, and subsidence that occur for any reason, and refinish the slope or embankment to the indicated lines and grades.

6. Excavate and stockpile separately suitable fill and backfill material. Stockpile locations must not create hazardous conditions for workers and the public. Protect stockpile to prevent erosion of material.

7. Excess or unsuitable materials and debris must become the Contractor's property. Remove and dispose such materials from the site in accordance with

AHJ requirements. The Contractor is responsible for locating an approved disposal site(s) and haul routes.

8. Contractor must not work outside of permitted impact boundaries or wetlands, streams, buffers or other identified sensitive areas.

B. Dewatering:

1. Prevent surface and subsurface water from flowing into excavations and from flooding project site and its surrounding areas.

2. Provide and maintain pumps, sumps, suction and discharge lines, and other dewatering system components required to convey water away from excavations.

3. Establish and maintain temporary drainage ditches and other diversions to convey water away from excavations. Do not use trench excavations as temporary drainage ditches.

C. Moisture Control:

1. Provide stormwater runoff control to intercept and convey stormwater away from the site. Eliminate ponding.

2. Apply uniformly water to surface, where subgrade or soil layer is to be moisture conditioned before compaction.

3. Remove and replace or air dry soil material that is too wet to compact to specified density. Contractor may stockpile or spread soil material to facilitate drying.

D. Excavation:

1. Perform excavation as indicated and required for concrete footings, foundations, slab on grade, retaining walls, paving, and site grading. Perform work in compliance with requirements of WAC 296-155 Part N.

2. Trench and Excavate for utilities as indicated on the issued for Construction Drawings.

3. Excavate to the lines and grades as indicated on the issued for Construction Drawings. Clear and level bottom of excavation; remove loose material, debris, and foreign matter.

4. Preserve material below and beyond the lines of excavations; where an excavation is carried beyond its limit, backfill with structural fill to the indicated grades.

5. Support and maintain stability of excavations by providing structural support, such as shoring, bracing, underpinning, and cribbing. Maintain excavations by sloping cut faces where space permits and provide the supporting calculations sealed and signed by a civil engineer currently registered in the State of Washington as required per Washington Administrative Code (WAC) 296-155, Part N. Calculations, as required per WAC 296-155, Part N, must consider existing conditions, including adjacent traffic, construction loading, and other local effects.

6. Keep trenching widths to a minimum, allowing for space to install forms and shoring as required by safety systems.

7. Place excavated material at least 3 feet away from excavation edge, to prevent cave-ins or bank slides.

8. Sound Transit has the right to hold the payment for over-excavation caused by the Contractor's negligence or convenience.

E. Subsurface Extraction:

1. Remove subsurface facilities and obstructions to the extent indicated on the issued for Construction Drawings.

2. When subsurface facilities or obstructions are encountered unexpectedly and they are interfering with new construction, notify the Resident Engineer promptly for corrective determination.

F. Subgrade Preparation:

1. Prepare subgrade in accordance with WSDOT Standard Specification, Section 2-06. Work must include subgrade stabilization and protection.

G. Backfilling:

1. Re-use material removed from excavations, if such material meets requirements in the Contract.

2. Place backfill in layers no more than 8 inches of loose material, when heavy equipment is used for compaction. Place backfill in layers no more than 4 inches of loose material, when hand-operated tampers are used for compaction.

3. Do not apply unbalanced horizontal loads to the new or existing subsurface structures or utilities during placement and compacting backfill material.

H. Compaction:

1. Before compaction, moisten or aerate each layer as necessary to provide the optimum moisture content.

2. Compact each layer of fill, backfill, and embankment to specified compaction density. Compactions are defined as Class I and Class II:

a. Class I Compaction: 90 percent relative compaction as determined by ASTM D1557.

b. Class II Compaction: 95 percent relative compaction as determined by ASTM D1557.

3. Compact fill, backfill, and embankment where the finished surface will be a bearing foundation, to achieve Class II Compaction for full depth. However, where the embankment construction exceeds 5 feet in depth, provide minimum Class I Compaction below the top 2.5 feet.

4. Compact fill below pavements to achieve Class II for full depth. However, where the fill exceeds 3 feet in depth, provide minimum Class I Compaction below the top 3 feet.

5. Compact the top 12 inches of backfill around structures to achieve Class II Compaction, and material underneath to achieve Class I Compaction.

6. Compact the top 12 inches of cut-and-cover backfill to achieve Class II Compaction. Compact the 36 inches of backfill material above utility to achieve Class I Compaction.

7. Except for original ground, cut subgrade, or fill that is less than 1 foot thick, scarify the surface and compact the top 8 inches of material to achieve Class II Compaction, as well as meeting the following requirements:

   a. For original ground located within 2.5 feet of finished pavement, compact original ground to achieve Class II Compaction, for full width of pavement plus 3 feet on each side thereof.

   b. For original ground upon which embankment is to be constructed, compact the top 6 inches of material to achieve Class II Compaction.

8. Where not indicated on the issued for Construction Drawings and structures are not involved, compact material to achieve Class I Compaction.

I. Finish Grading:

1. Finish grading areas to elevations and slopes as indicated on the issued for Construction Drawings, within the specified tolerance.

2. In landscape areas, grade to depth required (below finished grade) to allow placement of topsoil or mulch as indicated on the issued for Construction Drawings.

3.04 FIELD QUALITY CONTROL

A. Visually screen all soil and water excavated for staining, unusual odors, debris, slag, or sheen to evaluate the presence of contamination. Use field screening tests to screen for Unknown Hazardous and Contaminated Substances. Field screening tests may include water sheen test for the evidence of petroleum hydrocarbons and headspace measurements with the PID for evidence of volatile organic compounds. Notify Resident Engineer of new discoveries as specified in this specification.

B. Perform density tests on compacted fill, backfill, and embankment in accordance with ASTM D6938. Perform tests frequently, not less than the following:

1. Perform an initial test whenever material or source changes.

2. For expansive horizontal areas, perform one test per CY/LF range as follows:

   a. Embankment: 1 – 2,000 CY.

   b. Cut Section: 1 – 500 LF.

   c. Surfacing: 1 – 1,000 LF.

   d. Backfill: 1 – 500 CY.

3. For confined areas and embankments, perform one test per every second lift of fill, backfill, or embankment placement.

4. For structure backfill, perform minimum one test per structure.

C. Perform compaction tests on compacted fill, backfill, and embankment in accordance with ASTM D1557, Method D and ASTM D6938.

D. Perform moisture content tests on compacted fill, backfill, and embankment in accordance with ASTM D3017.

E. Maintain a clean and orderly work site.

F. Contractor must remove debris remaining at the work site after the job is complete at Contractor's expense.

END OF SECTION

SECTION 31 23 01

EXCAVATION SPOILS DISPOSAL

PART 1 - GENERAL

1.01 SUMMARY

A. Section includes:

1. Requirements for excavation spoils and drilled shaft spoils management and off-site disposal.

1.02 REFERENCES

A. This Section incorporates by reference the latest revisions of the following documents:

1. Washington Administrative Code (WAC):

a. WAC 173-350, Solid Waste Handling Standards.

b. WAC 173-303 Dangerous Waste Regulations.

c. WAC 173-340 Model Toxics Control Act – Cleanup.

d. WAC 296-843 Hazardous Waste Operations.

2. Code of Federal Regulations (CFR):

a. 40 CFR 264, Standards For Owners And Operators Of Hazardous Waste Treatment, Storage, And Disposal Facilities.

b. 40 CFR 265, Interim Status Standards For Owners And Operators Of Hazardous Waste Treatment, Storage, And Disposal Facilities.

3. Washington State Department of Ecology:

a. Publication 94-49 Guidance on Sampling and Data Analyses Methods.

b. Publication 97-602 Analytical Methods for Petroleum Hydrocarbons.

c. Publication 10-09-057 Guidance for Remediation of Petroleum Contaminated Sites.

4. Authority Having Jurisdiction (AHJ):

a. Standard plans and specifications.

B. Definitions:

1. Adulterated: Added a non-native material, chemical, or substance to a native soil.

2. Cementitious Materials: Materials containing cements, limes, mortars, grouts, or shotcrete.

3. Excavation Spoils: All spoils generated by the Work as required by the Contract.

4. Contaminated Soil: Soil, sludge or solid waste containing one or more Hazardous or Contaminated Substances at concentrations greater than applicable cleanup levels based on land use. Examples of Contaminated Soil may include, but are not limited to: street sweeping waste, sediment in utilities, and soil with Hazardous or Contaminated Substances from a past release associated site historical activities or soil contaminated by proximity to contaminated groundwater.

5. Dangerous Waste: Solid wastes designated under WAC 173-303 as dangerous, or extremely hazardous or mixed waste.

6. Waste Materials: All excavated spoils and soils generated by construction activities on Site.

1.03 COORDINATION

A. Contractor must hold a preconstruction meeting to discuss the approved Construction Work Plan (CWP). The CWP must address hold points, schedule of work, related approved submittals.

B. Prior to commencing any work, contractor must provide minimum of 30 days notice to schedule meeting(s) with Resident Engineer to discuss the work plan and schedule.

C. Contractor must obtain required permit(s) for the work from AHJ.

1.04 SUBMITTALS

A. Submit:

1. Submit Excavation Spoils Management and Disposal Plan to the Resident Engineer prior to soil being transported off-site. The contractor must not add additional disposal facilities without resubmitting the Excavation Spoils Management and Disposal Plan for Sound Transit review and approval. Plan must include the following:

a. Anticipated Waste Materials: Description and location of each anticipated waste material types, quantities, and their physical and chemical characteristics.

b. Temporary erosion and sediment control plan.

c. Sampling and Testing: Descriptions of sampling and testing methods for excavation spoils prior to disposal with sampling and analysis plan(s) including identification of chemical analytical methods, chemical analytical laboratories, analyte target reporting limits, field and laboratory QC samples and frequency, sample containers and preservation methods and planned sample locations.

d. Waste classification methods in accordance with WAC 173-303, WAC 173-340, WAC 173-350 and Reuse Criteria and Cleanup levels as required by the Contract.

e. Soil Stabilization: Descriptions of physical or chemical treatment of excavation spoils prior to disposal as required by the Contract.

f. Waste Materials Handling Methods: For handling, stockpiling, testing, treating (if required), transporting, and disposing of waste materials to include:

1) Proposed detailed methods for handling, stockpiling, treating (if necessary), testing, transporting, and disposing of all Waste Materials, including asphaltic materials, generated by the activities.

2) Details for hauling waste materials must include waste types, weighing method, name of the hauling Subcontractor, hauling method, equipment, round trip distances, hours, and the disposal facility for each waste material.

3) Disposal site operators signed letters certifying that the site is licensed to receive the anticipated waste materials, and stating how many tons of each waste material the facility can receive daily. Include copies of all permits the receiving facility is required to maintain in order to accept the waste material anticipated to be treated, if necessary, handled or disposed of at the facility. Include copies of facility operational permits documentation of offsite disposal facilities' acceptance criteria and associated chemical analytical data of soil to be disposed that meets acceptance criteria.

4) Provide contact name, address, e-mail address, telephone numbers, and operation hours and days for each disposal facility. Indicate any special arrangement made by the Contractor to deliver and dispose of waste material outside of facility's regular operating hours. Note any contractual constraints on hauling Waste Material from the site.

5) Details of all anticipated sampling and testing and required methods prior to Excavation Spoils leaving the Site.

6) Detailed methods for soil stabilization including adjusting pH, soil stabilization, or chemical treatment of Excavation Spoils, if necessary, prior to disposal.

7) A table of disposal fees for each type of Waste Material at each proposed disposal site.

8) A copy of the contract between the Contractor and disposal site operator and the acceptability criteria of each Waste Material to be disposed of at each proposed site.

2. Submit Excavation Spoils Disposal Report cumulatively to the Resident Engineer for review on a monthly basis. Report must include the following:

a. Record of type, quantity (by weight), physical characteristics, chemical analytical data, approved waste profiles, total transportation cost, and daily tipping fee of each excavation spoil and waste material disposed at each facility.

b. Copy of all receipts, weight tickets, manifests, truck tickets, certifications of final treatment/disposal signed by the responsible disposal facility official, Land disposal notification records required under 40 CFR 268 for hazardous wastes, and fees issued by the disposal facility for each waste material.

c. Certification from each receiving disposal facility owner that all operating permit conditions are met.

d. Furnish the original return copy of the Dangerous Waste manifest, signed by the owner or operator of a facility legally permitted to treat or dispose of those materials furnished to the Resident Engineer.

1.05 QUALITY ASSURANCE

A. Permits, Regulations, and Laws:

1. The Department of Ecology has determined that waste materials derived from cementitious materials and excavated soil, containing or affected by cementitious materials, are considered solid wastes under state law. Such waste materials must follow the handling and disposing requirements of WAC Chapter 173-350. Any proposed recycling or re-use of such materials must be approved and permitted in advance by the Department of Ecology.

2. Confirm that all disposal sites that are to receive Waste Materials are permitted and licensed to receive Waste Materials, and are licensed to contain and treat runoff from waste materials. Refer to hazardous and contaminated substance health and safety program requirements as required by the Contract.

3. Comply with AHJ regulations and laws governing the handling, transporting, and disposing of waste materials.

B. Certification:

1. The disposal sites must be in accordance with all the regulations for proper disposal or treatment.

2. For Contaminated Soil, use a state-licensed transporter.

PART 2 - PRODUCTS (NOT USED)

PART 3 - EXECUTION

3.01 EXCAVATION

A. Means and methods of handling, stockpiling, stabilizing, treating, transporting, and disposal of waste materials are exclusively determined and controlled by the Contractor; however, their employment must minimize the disposal costs.

B. All cost impacts associated with the waste management, due to the means and methods of construction are the Contractor's responsibility.

C. The Contractor's means and methods determine the final physical and chemical characteristics (such as water content and pH level) of the waste materials prior to disposal:

1. The available geotechnical data and reports describe the physical and chemical characteristics of the undisturbed in-situ materials only; the reports do not characterize the waste material after it is disturbed by the Contractor.

D. Do not blend or cross contaminate waste materials.

E. Control all stockpile runoff as required by the Contract.

F. Use hauling equipment appropriate for containing and transporting waste materials with high water content (30 percent by volume). Equip trucks used for hauling high water

content materials with tailgate locks and seals to prevent leakage along haul routes. Trucks must utilize load-covering devices for hauling waste materials away from the Site.

G. Material hauled to Resource Conservation Recovery Act (RCRA) landfills must contain no free draining liquids and pass the Paint Filter Liquids Test by EPA method 9095B in accordance with 40 CFR 264.314 and 264.315.

H. Characterize Hazardous and Contaminated Substances in all excavation spoils disposed outside of the project area. Complete sampling and chemical analysis in accordance with chemicals of concern for a project parcel where the soil was generated, applicable sections of WAC 173-340 Table 830-1. Ensure required testing are in accordance with the Petroleum Releases and Ecology' Publication 10-09-057 Guidance for Remediation of Petroleum Contaminated Sites, and the disposal facility requirements. Disposal facility requirements must include additional sampling or chemical analytical testing to verify waste characterization under the Dangerous Waste Regulations WAC 173-303. The frequency for sampling and testing the on-site material suitability must be performed as described below.

Minimum Number of Samples Needed to Adequately Characterize Soil	
Cubic Yards of Soil	**Number of Samples for Analysis**
0 to 100	3
101 to 500	5
501 to 1000	7
1001-2000	10
>2000	10 plus1 for each additional 500 cubic yards

3.02 REMOVAL

A. In case of disposing high pH (>8.5) waste materials, the Contractor must confirm that the proposed disposal facility is licensed to receive high pH waste materials, and the facility is capable of containing and treating waste runoff.

B. When excavation spoils disposal is suspended at any time by any entity for any reason, within 24 hours, the Contractor must submit reasons for suspension in writing to the Resident Engineer.

3.03 CONTAMINATED SUBSTANCES AND DANGEROUS WASTE DISPOSAL

A. Load Contaminated Substances and Dangerous Waste for offsite disposal. Cover each load with tarpaulin prior to leaving the Site.

B. Provide transportation in accordance with WSDOT Hazardous Material Regulations, and local, state and other federal requirements.

C. Treatment, Disposal and Recycling:

1. Classify spoils for disposal, determine if the spoils require pre-treatment prior to disposal, determine whether spoils are acceptable for RCRA Subtitle D landfill facility or if a regulated Dangerous Waste, then RCRA Subtitle C facility as described in C.6.a.

2. For eligible WAC 173-303 listed waste, obtain a Contained-in-Determination (CID) from Ecology soil following Ecology CID procedures:

   a. Perform treatment, disposal, and recycling of materials in accordance with all applicable laws and regulations, and conditions specified herein. Include all necessary personnel, labor, transportation, packaging, equipment and reports for this Work.

   b. If treatment is required before disposal, transport contaminated soils to a treatment facility permitted to accept and treat the Contaminated Substances in accordance with applicable regulations and requirements.

   c. If landfilling is the chosen disposal option:

      1) Dispose of Contaminated Soil in a licensed landfill in accordance with applicable requirements.

      2) Dispose of Contaminated Soil classified as Dangerous Waste, as outlined in WAC 173-303, in a permitted Subtitle C Landfill, subject to approval of the Resident Engineer.

      3) Dispose of Contaminated Soil classified as Solid Waste, as outlined in WAC 173-350, in a permitted Subtitle D Landfill.

D. Profiles and Manifests:

1. Sound Transit's Hazardous Materials Coordinator or an individual delegated with such authority by Sound Transit shall sign the waste profile as the generator. The Contractor is responsible for coordinating with Sound Transit and providing sufficient chemical analytical data and information for Sound Transit to verify waste characterization.

2. Manifesting of dangerous waste: conform to EPA, DOT, and all other applicable federal, state, and local regulation.

3. For disposal of all Dangerous Waste, with the exception of those wastes resulting from the release of Contaminated Substances negligently disturbed, removed, or handled by Contractor, its employees, agents, officers, or Subcontractors, or any other persons for whom the Contractor may be contractually or legally responsible, ensure that the Generator's Certification portion of the Uniform Hazardous Waste Manifest is signed only by Sound Transit's Environmental Compliance Manager or by an individual delegated with such authority by Sound Transit.

4. Provide records in accordance with applicable federal, state, and local regulations. Following Contract close out, the records shall become the property of Sound Transit.

END OF SECTION

EXHIBITS: (On Proceeding Page)

1. EXHIBIT A - Excavation Spoils Disposal Flow Chart

EXHIBIT A - EXCAVATION SPOILS DISPOSAL FLOW CHART

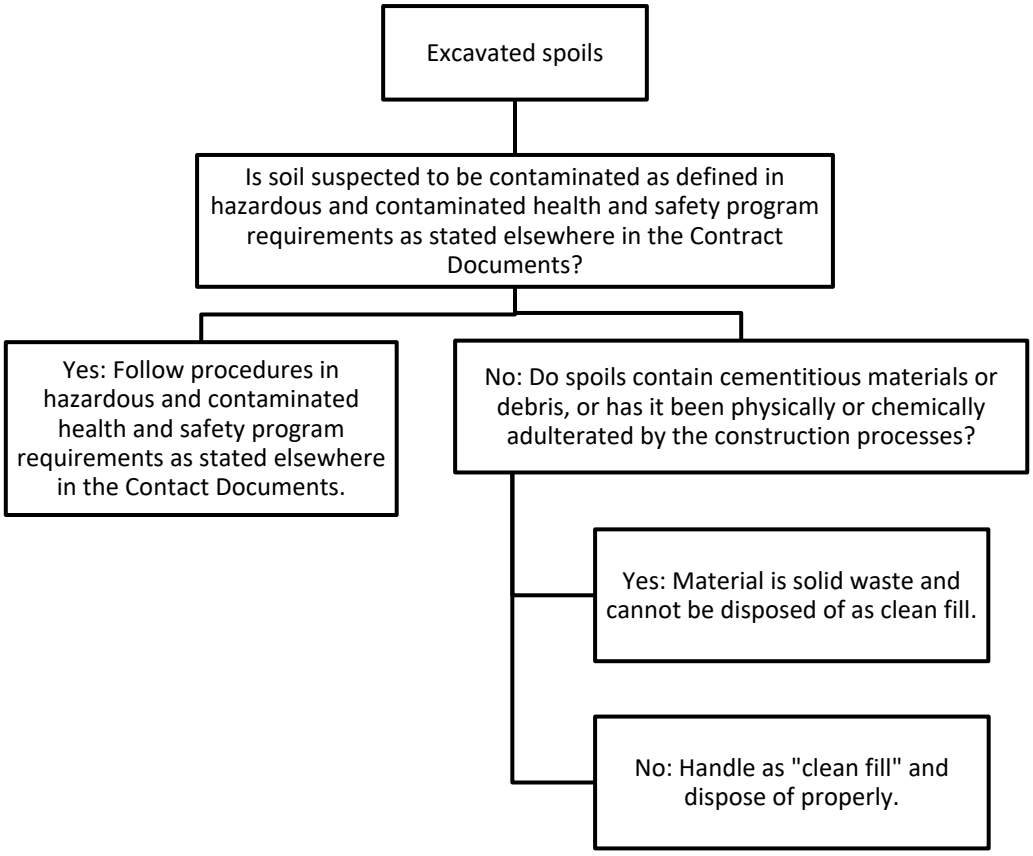

END OF EXHIBITS

SECTION 31 23 33

TRENCHING AND BACKFILLING

PART 1 - GENERAL

1.01 SUMMARY

A. Section includes:

1. Requirements for trenching, excavating, and backfilling for utilities and related structures, which include underground piping for water supply, sanitary sewer, storm drainage, underground electrical conduits and duct banks, utility boxes, catch basins, manholes, and vaults. Trenching and backfilling for utilities includes restoration of existing pavements and other surfaces, where applicable, to the conditions existing before the excavation.

1.02 REFERENCES

A. This Section incorporates by reference the latest revisions of the following documents:

1. Washington Administrative Code (WAC):

a. WAC 296-155 Part N, Safety Standards for Construction Work, Excavation, Trenching and Shoring.

2. Washington State Department of Transportation (WSDOT):

a. Standard Specifications for Road, Bridge, and Municipal Construction.

b. Construction Manual.

3. Authority Having Jurisdiction (AHJ):

a. Standard plans and specifications.

1.03 COORDINATION

A. Contractor must hold a preconstruction meeting to discuss the approved Construction Work Plan (CWP). The CWP must address hold points, schedule of work, related approved submittals.

B. Prior to commencing any work, Contractor must provide minimum of 30 days notice to schedule meeting(s) with the Resident Engineer to discuss the work plan and schedule.

C. Contractor must obtain required permit(s) for the work from AHJ.

1.04 SUBMITTALS

A. Submit:

1. Material source, and all tests and certifications necessary to approve material, including moisture/density relation test results.

2. If on-site material is proposed for use as any of the materials specified in construction, provide test results certifying suitability of the on-site material.

Perform sampling and tests of the on-site material suitability per Section 9-3.7 of the WSDOT Construction Manual.

3. Prepare drawings and calculations for trench shoring systems , sealed, signed by a professional civil engineer registered in the State of Washington, as required by the Washington Administrative Code (WAC) 296-155, Part N.

PART 2 - PRODUCTS

2.01 BEDDING AND BACKFILLING MATERIALS

1. Gravel Backfill for Pipe Zone Bedding for utility excavation must conform to AHJ Standard Specifications.

2. Bedding and backfill materials for other utilities must be in accordance with WSDOT Standard Specifications Section 9-03 to include:

    a. Foundation Material, Sections 9-03.17 and 9-03.18.

    b. Gravel Backfill for Foundations, Section 9-03.12(1).

    c. Gravel Backfill for Pipe Zone Bedding, Section 9-03.12(3).

    d. Pipe Zone Backfill, Section 9-03.19.

    e. Trench Backfill, Sections 9-03.15 or 9-03.19 or select on-site native materials.

    f. Gravel Backfill for Drains, Section 9-03(12)4.

3. Replace unsuitable or unstable material with foundation of gravel in accordance with WSDOT Standard Specifications Section 9-03.12(3).

4. Bedding and subsequent backfill for conduits and duct banks in areas that are paved or under sidewalks must conform to the local jurisdiction material and construction standards:

    a. Bedding and backfill for electrical conduits and duct banks must conform to Sand bedding and backfill in accordance with WSDOT Standard Specifications Section 09-03.13.

    b. Subsequent Backfill: Crushed Surfacing Top Course in accordance with WSDOT Standard Specifications Section 9-03.9(3).

5. Backfill for conduits and duct banks in landscaped or unimproved areas: must be Gravel Borrow conforming to WSDOT Standard Specifications Section 9-03.14(1).

6. Contractor must place fluidized thermal backfill (FTB) around electrical ducts where indicated on the issued for Construction Drawings.

7. FTB must conform to the utilities owners standards for the current mix numbers of the following vendors: Cadman , Corliss, Glacier, Miles, or Stoneway.

8. Six inches of FTB must extend past the encasement of the existing ducts on both sides, top and bottom. FTB must cover the existing ducts to the bottom of pavement subgrade.

9. FTB must include a red dye.

10. Trench Backfill Selected Material: Selected Material is material obtained from onsite excavations on the Project Site that meet the specification material requirements for trench backfill as determined by testing and concurrence by the Resident Engineer to be suitable for selected fill applications. Use selected Material first before new borrow material is imported. Selected Material must be in accordance with WSDOT Standard Specifications Section 9-03.19 for Bank Run Gravel for Trench Backfill.

11. Controlled Density Fill (CDF): In accordance with WSDOT Standard Specifications Section 2-09.3(1)E, or a similar material approved by the Resident Engineer.

12. Controlled Low-Strength Material (CLSM): In accordance with the WSDOT Standard Specifications Section 2-09.3(1)E. Modifythe 28-day strength requirement to range between 100 psi minimum and 200 psi maximum:

    a. Use the following design mix for CLSM:

MATERIAL	**QUANTITY/CUBIC YARD**
Portland Cement Type I-II	30 pounds
Fly Ash Cl. F, or Fly Ash Cl. C	2.2 cubic feet 1.1 cubic feet
Mineral Aggregate Type 7 w/ Cl. F Fly Ash	17.1 cubic feet
Mineral Aggregate Type 7 w/ Cl. C Fly Ash	18.2 cubic feet
Water	4.8 cubic feet
Air Entrainment	2.7 cubic feet

NOTE: Slump must not exceed 7 inches.

13. Geotextile must meet the requirements of WSDOT Standard Specifications Section 9-33.2(1), Table 3 for Construction Geotextile for Separation.

14. Sand bedding and backfill around the water main and high pressure and intermediate gas mains must comply with WSDOT Standard Specifications Section 9-03.13 Backfill for Sand Drains.

PART 3 - EXECUTION

3.01 PREPARATION

A. Staking and Grades: As required by the Contract .

B. Establish bench marks, grading stakes, and other required markers.

C. Existing Utilities:

1. Verify on site the location and depth (elevation) of existing utilities and services, before performing earth moving work. Perform excavation work by hand, when excavating within 3 feet of an active utility line. Protect active utilities from potential damage created by operation.

2. Remove abandoned utilities and plug ends, when encountered in during earth moving.

3. Report immediately the discovery of active utility lines, which are not indicated on the Issued for Construction Drawings, to the Resident Engineer and utility owners involved. Provide the Resident Engineer and utility owners free access to determine the measures deemed necessary to repair, relocate, or remove the utility.

D. Protection of Persons and Property:

1. Erect and maintain temporary bracing, shoring, lights, barricades, signs, and other measures as necessary to protect the public, workers, and adjoining improvements from damage during trenching work in accordance with applicable codes and regulations.

2. Protect utilities, pavements, and facilities from damage caused by settlement, lateral movement, undermining, washout, and other hazards created by the trenching operations.

3. Protect open trenches outside of secured fence areas with steel plates with nonslip surfaces or water filled barriers during non-working hours. Provide barriers to block pedestrians, vehicles, or bicyclists from entering the work area and approaching trenches during working hours.

E. Dewatering:

1. Prevent surface water and subsurface or ground water from flowing into excavations and from flooding Project Site and surrounding area.

2. Where water is encountered in the trench, dewater as required by the Contract.

3. Provide and maintain pumps, sumps, suction and discharge lines, and other dewatering system components necessary to convey water away from excavations.

4. Establish and maintain temporary drainage ditches and other diversions outside excavation to convey water. Do not use trench excavations as temporary drainage ditches.

F. Trenching and Excavating:

1. Trench and excavate for utilities to the depths, lines, and grades indicated on the Issued for Construction Drawings and in accordance with AHJ requirements. The maximum trench width in the Right of Way must not exceed the neat line shown on Issued for Construction Drawings or value calculated based on WSDOT Standard Specifications, Section 2-09.4.

2. Shoring and compaction must conform to AHJ Standard Specifications,

3. Shoring and compaction within the WSDOT right-of-way area must be in accordance with WSDOT Standard Specifications Section 2-09.3.

4. Perform work in accordance with the requirements of WAC 296-155, Part N, Excavation, Trenching and Shoring and AHJ Standard Specifications.

5. In landscape areas, install any utilities prior to any landscape work commencement.

6. In paved areas, sawcut pavement, curb, and sidewalk on the neat lines at the width indicated for the trench. Do not undermine or disturb pavements, sidewalks, and other adjacent facilities beyond the trench.

7. Do not undermine or disturb sidewalks, pavements, appurtenant structures, adjacent improvements or underground installations adjacent to and beyond the trench.

8. Excavate to the depth, line, and grade indicated on the Issued for Construction Drawings or as referenced in a Standard Plan.

9. Excavate using open cut methods.

10. Keep the length of trench excavation in advance of pipe installation operations to a minimum and do not exceed 200 feet.

11. The maximum trench width in the Right of Way must not exceed the neat line trench width as shown or indicated in the Issued for Construction Drawings. Where trench width is not indicated, calculate width based on WSDOT Standard Specifications.

12. Excavate to the inverts indicated on the Issued for Construction Drawings or in accordance with AHJ Standard Details or WSDOT Standard Plans plus any additional excavation as necessary to accommodate the Contract specified class of bedding. Provide over-excavation for the pipe bells such that pipe barrels and bells along the pipe are uniformly supported full length.

13. Stockpiling and Reuse of Excavated Material: In accordance with WSDOT Standard Specifications.

14. Grade surrounding areas or utilize alternative controls to prevent surface water from flowing into the excavations.

15. Maintain at least 3 feet of separation from the toe of the slope of any stockpiled excavated material from the trench edge.

16. Notify the Resident Engineer if over-excavation is required and/or material in trench bottom is suspected to be unsuitable.

17. For utility structures, provide a minimum of 12 inches between the exterior surfaces of utility structures and the sides of the excavation.

18. Remove all ledgerock, boulders, stones, and any object larger than 3 inches in any dimension within 6 inches in any direction from the pipe.

19. Remove trench protective systems in such a manner as to not disturb bedding or backfill. Where bedding or backfill is disturbed, reconsolidate the material as specified.

20. Ensure excavations for structures conform to the applicable requirements as required by the Contract.

21. If excavation width exceeds permissible dimensions, install higher strength pipe or encase the pipe in concrete, at no additional expense to Sound Transit.

22. Remove unexpected objects, such as abandoned utilities, stumps, log, railroad ties, and buried pavement, when they are encountered during the excavation. If the removal of unexpected objects requires an increase in trench size, or if the removal cannot be done by the equipment at hand, notify the Resident Engineer.

23. Stockpile excavated materials: After improvements to utilities are completed, backfill trench, safely remove trench protection without distributing compacted bedding, compact backfill, and restore pavement, curb, and sidewalk in

accordance with AHJ requirements. Restore outside the neat lines at no additional expense to Sound Transit.

G. Bedding and Backfilling:

1. Place bedding and backfill for utilities as indicated on the Issued for Construction Drawings, in accordance with the applicable requirements of the utility owners.

2. For Water Mains, Water Service Line, Fire Hydrant Laterals and Fire Department Connection Lines:

   a. Place bedding in accordance with the dimensions indicated on the Issued for Construction Drawings or as the AHJ Standard Plans or WSDOT Standard Plans and specifications.

   b. Provide uniform support along the entire pipe barrel, without load concentration at joint collars or bells. Provide over-excavation for the pipe bells such that pipe barrels and bells along the pipe are uniformly supported full length.

   c. Do not use blocking to adjust pipe to grade.

   d. Reconsolidate bedding disturbed by pipe movement or by removal of trench protection prior to backfill.

   e. Take special care to provide adequate bedding support at wye or tee connections and adjacent manholes or other structures to avoid bending or shearing stresses at these critical points.

3. Pipe Bedding for Storm Drains and Sanitary Sewers as specified in AHJ Standard Specifications

4. Electrical Vault Bedding in accordance with AHJ Standard Details for water and wastewater improvements, or the Utilities Owner Service Handbook.

5. Backfilling: Backfill with material indicated. Take all necessary precautions to protect the pipe, duct bank or vault from any damage or shifting:

   a. Pipe and duct bank Backfilling: Backfill from the side of the trench to a uniform depth of 1 foot above ductile iron pipe before starting compaction, and to a uniform depth of 2 feet above concrete pipe and duct banks before starting compaction.

   b. Electrical Vault backfill in accordance with the Utilities Owner's Construction Guideline Service Handbook.

   c. Electrical Cable, Electrical and Telecommunication Vault backfill in accordance with the standards of the AHJ

   d. Do not backfill around portions of structures requiring backfill on only one side or on less than all sides, until the concrete has reached the specified 28-day strength to withstand the earth pressures on structures.

   e. Re-use material removed from excavations, if such material meets the backfill requirements.

H. Compaction: As required by the Contract:

1. The comapaction requirement in improved areas such as parking lots or sidewalks is Class II Compaction.

2. The compaction requirement in unimproved areas or landscaped areas is Class I Compaction.

I. Restoration:

1. Restore surface as indicated on the Issued for Construction Drawings and Contract Specifications, in accordance with AHJ requirements.

3.02 FIELD QUALITY CONTROL

A. As required by the Contract.

END OF SECTION

SECTION 31 32 36

SOIL NAILING

PART 1 - GENERAL

1.01 SUMMARY

A. Section includes:

1. Material and construction requirements for the soil nail wall systems indicated on the Issued for Construction Drawings.

2. Requirements for any design modifications to be made to the wall systems.

1.02 REFERENCES

A. This Section incorporates by reference the latest revisions of the following documents:

1. American Association of State Highway and Transportation Officials (AASHTO).

2. AASHTO M111 Standard Specification for Zinc (Hot-Dip Galvanized) Coatings on Iron and Steel Products.

3. AASHTO Construction Specifications Section 11.3.3 Materials.

4. American Concrete Institute (ACI).

5. ACI 318 Building Code Requirements for Structural Concrete and Commentary.

6. ASTM A36 Standard Specification for Carbon Structural Steel.

7. ASTM A123 Standard Specification for Zinc (Hot-Dip Galvanized) Coatings on Iron and Steel Products.

8. ASTM A307 Standard Specification for Carbon Steel Bolts, Studs, and Threaded Rod 60,000 PSI Tensile Strength.

9. ASTM A563 Standard Specification for Carbon and Alloy Steel Nuts.

10. ASTM A615 Standard Specification for Deformed and Plain Carbon-Steel Bars for Concrete Reinforcement.

11. ASTM A722 Standard Specification for High-Strength Steel Bars for Prestressed Concrete.

12. ASTM A775 Standard Specification for Epoxy-coated Reinforcing Bars.

13. ASTM C33 Standard Specification for Concrete Aggregates.

14. ASTM C109 Standard Test Method for Compressive Strength of Hydraulic Cement Mortars (Using 2-in. Cube Specimens).

15. ASTM C150 Standard Specification for Portland Cement.

16. ASTM C595 Standard Specification for Blended Hydraulic Cements.

17. ASTM D1248 Standard Specification for Polyethylene Plastics Extrusion Materials for Wire and Cable.

18. ASTM D1784 Standard Classification System and Basis for Specification for Rigid Polyvinyl Chloride (PVC) Compounds and Chlorinated Polyvinyl Chloride (CPVC) Compounds.

19. ASTM D3350 Standard Specification for Polyethylene Plastics Pipe and Fittings Materials.

20. ASTM D4716 Standard Test Method for Determining the (In-plane) Flow Rate per Unit Width and Hydraulic Transmissivity of a Geosynthetic Using a Constant Head.

21. Federal Highway Administration – National Highway Institute (FHWA-NHI).

22. FHWA-NHI-14-007, Geotechnical Engineering Circular No. 7, Soil Nail Walls – Reference Manual.

23. FHWA SA-96-069R Manual for Design and Construction Monitoring of Soil Nail Walls.

24. Washington State Department of Transportation.

25. WSDOT Standard Specifications for Road, Bridge and Municipal Construction.

26. Sound Transit - ST Design Requirements.

B. Definitions:

1. Closure Time: The duration of time between excavation to the neat line and the application of the shotcrete.

2. Drill Bench: Temporary bench created for the purpose of installing soil nails.

3. Neat Line: Excavated surface corresponding to final wall excavation face limits as indicated on the Issued for Construction Drawings.

4. Soil Nail System: Excavation support system that occurs in staged lifts, consisting of soil nails and shotcrete lagging. The excavation in the vicinity of the wall requires special care and effort compared with general earthwork excavation.

5. GFRP: Glass fiber reinforced plastic.

6. Independent Geotechnical Engineer: Engineer selected by the contractor to monitor installation and testing of soil nails and to coordinate with the Resident Engineer.

1.03 SUBMITTALS

A. Submit:

1. Detailed Design Calculations and Plans if designed by the Contractor.

2. Soil Nail Construction Work Plan.

3. Soil Nail Test Results (including both Proof and Verification Test).

4. Soil Nail Installation Records.

5. Shop Drawings/ Coordination Drawings.

6. Delegated Design Submittals.

7. Ground Corrosion Potential testing of soil samples (need to meet 2.01.J).

B. Transmit:

1. Contractor Personnel Qualifications.

2. Product Data: Manufacturer's product data and instructions for manufactured products indicated.

3. Certifications.

4. Certified mill test for steel nail bars including chemical composition, ultimate strength, yield strength and elongation for each heat unit.

5. Certified tests for GFRP nail bars including chemical composition, ultimate strength, and creep potential for each unit.

6. Certified calibration records from an Independent Testing Laboratory for each test jack and pressure gage pair and load cell to be used: Include the following items on calibration records: device identification numbers, date tested, and calibration test results to be certified for accuracy within 2 percent of the applied loads.

7. Manufacturer certification for nail couplers and bar centralizers.

1.04 QUALITY ASSURANCE

A. If modifications are made to the soil nail system indicated on the Issued for Construction drawings, provide calculations and drawings signed and stamped by a registered professional engineer licensed in the State of Washington.

B. Qualifications:

1. Contractor: Demonstrate completion of at least 3 soil nail retaining wall projects of similar size and complexity and in similar soil conditions in the past 3 years.

2. Onsite supervisors and drill operators: Demonstrate completion of at least 3 similar soil nail walls in similar soil conditions in the past 3 years.

3. Geotechnical Engineer: Select a licensed engineer with geotechnical background currently registered in the State of Washington, with at least 5 years of experience in designing, monitoring and testing of soil nail excavation support systems.

C. Certifications:

1. Certified mill test for steel nail bars including chemical composition, ultimate strength, yield strength and elongation for each heat unit.

2. Certified tests for GFRP nail bars including chemical composition, ultimate strength, and creep potential for each unit.

3. Certified calibration records from an Independent Testing Laboratory for each test jack and pressure gage pair and load cell to be used: Include the following items on calibration records: device identification numbers, date tested, and calibration test results to be certified for accuracy within 2 percent of the applied loads.

4. Manufacturer certification for nail couplers and bar centralizers.

1.05 SOIL NAIL CONSTRUCTION WORK PLAN

A. Shop Drawings:

1. Consistent with layout indicated on the Issued for Construction drawings unless modifications are made.

2. Indicate for each soil nail: Horizontal and vertical position, length, diameter, inclination, bar size and material, and splay angle.

3. Indicate locations of sheet drains, drain grates, and other appurtenances.

4. Indicate shotcrete thickness and reinforcement.

B. Site Drainage Plan: Address all elements necessary to divert, control, and dispose of surface and subsurface water during construction of the soil nail wall, coordinated with other requirements indicated. Accomplish control of surface water behind retaining walls by sloping to promote runoff away from the excavation, trenches and sumps, or shotcrete gutters. Grade the excavation to promote drainage away from the toe of the retaining walls.

C. Proposed Drilling Methods and Equipment: Including drill rig type, use of cased or open-hole methods, proposed drill hole diameter, and method of cuttings removal to achieve the specified pull-out resistance presented on approved submittals.

D. Methods for removing protrusions and backfilling voids, if required.

E. Soil Nail Installation Details:

1. Nail grout mix design including: brand and type of portland cement and admixtures, quality and gradation of aggregates, proportion of mix by weight, water-cement ratio and compressive strength test result verifying the specified minimum 3 day and 28-day grout strength.

2. Nail grout placement procedures and equipment.

3. Nail testing methods and equipment including: details of jacking frame and appurtenant bracing, methods of isolating test soil nails during shotcrete application, and methods of grouting the unbonded length of test nails after testing.

4. Identification of independent testing laboratory for soil nail testing.

5. Bearing plates and nuts used.

6. Corrosion protection details.

7. Geocomposite sheet drain installation procedures.

8. Shotcrete installation procedures as stated elsewhere in the Issued for Construction Documents.

1.06 SOIL NAIL INSTALLATION AND TEST RECORDS

A. Installation records must include:

1. Head location.

2. Length and inclination of installed nail.

3. Bar type and size.

4. Soil conditions encountered during installation.

5. Grout mix, pressure, and volume.

6. Drill Hole Diameter.

B. Test records must include the information required for the installation records as well as the followings:

1. Bond Length, free length, and stressing length.

2. Design bond strength.

3. Testing procedures.

4. Testing results.

C. The Independent Geotechnical Engineer must prepare installation and Test records and submit them to the Resident Engineer for approval.

1.07 DESIGN CRITERIA

A. If modifications are made to the soil nail system indicated on the Issued for Construction drawings, revise design in accordance with the requirements herein.

B. Soil Nail System:

1. Design in accordance with FHWA SA-96-069R and applicable requirements in ST Design Requirements.

2. Be responsible for the stability of the interim temporary face cuts that exist prior to installation of the wall facing.

3. Design must limit movement to 1 inch, or to the extent required to protect nearby structures and pavements from damage, whichever is smaller.

C. Applicable Design Methods:

1. SNAILZ.

2. GOLDNAIL.

3. Other methods if approved by Sound Transit (SnailPlus).

D. Soil Parameters:

1. For soil properties, refer to Geotechnical Baseline Report (GBR) and/or Geotechnical Data Report (GDR), if applicable. GBR establishes baseline ground and groundwater conditions. GDR provides boring logs, laboratory testing results, and geotechnical data.

E. Minimum Utility Clearance:

1. Minimum Utility Clearance: 3 feet or distance required by entity with legal jurisdiction, whichever is greater.

2. Minimum Clearance between Soil Nails: Center-to-center clearance between soil nails must be at least 1.5 feet for temporary soil nails and at least 2.5 feet for permanent soil nails. Center-to-center clearance between two parallel soil nails must be at least 3 feet.

3. If necessary, adjust inclination or splay angle of soil nails to meet clearance requirements.

F. Facing:

1. For shotcrete Facing:

a. Design in accordance with FHWA NHI-14-007 Geotechnical Circular No. 7, Soil Nail Walls Reference Manual, ACI 318 and Issued for Construction documents.

b. Minimum thickness requirements: As indicated on the Issued for Construction drawings.

G. Soil Nail Wall Drainage:

1. For permanent walls, the design must incorporate, and be compatible with, the soil nail drainage provisions in the Issued for Construction Documents.

PART 2 - PRODUCTS

2.01 MATERIALS

A. Use construction materials for the soil nail walls that are new and without defects.

B. Shotcrete: Refer to sections stated elsewhere in the Issued for Construction Documents.

C. Soil Nail Grout: Neat or sand/cement mixture with:

1. Cement: ASTM C150, Type II, Low Alkali for soil sulfate content class S0 and S1; ASTM C150 Type V for soil sulfate content class S2. See ACI 318 Table 19.3.2.1 Requirements for Concrete by Exposure Class for soil sulfate content class higher than S2. Blended hydraulic cement (ASTM C595) is permitted by following ACI 318 Table 19.3.2.1 based on the soil sulfate content class.

2. Aggregates: ASTM C33 and sections stated elsewhere in the Issued for Construction Documents.

3. Minimum 3-day compressive strength of 1500 pounds per square inch (psi).

4. Minimum 28-day compressive strength of 3000 pounds per square inch (psi).

5. Slump of 8 inches plus or minus 1 inch.

D. Solid Nail Bars: Steel: Conform to ASTM A615, grade 75, or ASTM A722, grade 150. GFRP: See requirements for GFRP soil nail elements stated elsewhere in the Issued for Construction Documents.

E. Bar Couplers: Provide 125 percent of the full ultimate tensile strength of the steel bar as certified by the manufacturer. No splices are allowed with GFRP soil nail elements.

F. Headed Studs: Conform to ASTM A307, automatically end welded.

G. Bearing Plates: Conform to ASTM A36, grade 36.

H. Nuts and Washers: Conform to AASHTO A563, grade B, hexagonal fitted, with beveled washer or spherical seat to provide uniform bearing.

I. Shear Connectors: AASHTO Construction Specifications, Section 11.3.3.1 Welded Shear Stud Connectors-Materials.

J. Corrosion Protection for Bars and Accessories: Provide corrosion protection for all steel soil nail bars and accessories with both items 1 and 2 as indicated below if the soil is classified as “aggressive” in accordance with FHWA-NHI-14-007 Section 7.5.2 Criteria for Assessing Ground Corrosion Potential. If the soil is classified as “non-aggressive”, provide corrosion protection for all steel soil nail bars and accessories with item 1. Soil must meet all the thresholds in Table 7.2 of FHWA-NHI-14-007 to be considered as “non-aggressive”:

1. Corrugated Plastic Sheathing for Nail Bars (Double Corrosion Protection):

a. Polyvinyl chloride (PVC) or high-density polyethylene (HDPE).

b. PVC: ASTM D1784 Class 13464-B.

c. HDPE: ASTM D3350 Index No. 324420 C Table 1, ASTM D1248, and AASHTO A775.

d. Minimum thickness of 0.04-inch for PVC or 0.06-inch for HDPE.

e. Pre-grouted per manufacturer’s recommendations.

f. Hot-Dip galvanized accessories per ASTM A153.

2. Hot-Dip Galvanizing:

a. Nail Bars per ASTM A123 or AASHTO M111.

b. Accessories per ASTM A153.

K. Bar Centralizers:

1. Schedule 40 polyvinyl chloride (PVC) material securely attached to the soil nail bar.

2. Size centralizers to position the soil nail bar within 1 inch of center of the drill hole, to allow tremie pipe insertion to the bottom of the drill hole, and to allow the grout to flow freely up the drill hole.

L. Geocomposite Sheet Drain:

1. Manufactured with a drainage core (i.e., geonet) and a drainage geotextile attached to or encapsulating the core. Drainage core with a minimum compressive strength of 15,000 pounds per square foot (psf) covered with filter fabric capable of maintaining drainage void.

2. The drainage core with the geotextile fully encapsulating the core must have a minimum flow rate of 5 gallons per minute per foot width tested in accordance with ASTM D 4716.

M. Weep Pipe: Polyvinyl Chloride (PVC) meeting ASTM D1785 Schedule 40.

2.02 EQUIPMENT

A. Drilling:

1. Select drilling equipment and method suitable for anticipated ground conditions.

2. In caving ground, use cased or augercast drilling methods to support the sides of the drill hole.

B. Grouting:

1. Use a continuously agitating type of mixer capable of producing a uniformly mixed grout, free of lumpy and undispersed cement. Select the size of the grout mixer to allow the full length of the soil nail to be grouted in one continuous operation.

2. Use positive displacement grout pumps. Equip grout pump with a pressure gage that can measure at least twice, but no more than three times, the intended grout pressure.

C. Soil Nail Testing:

1. Dial gages:

a. At least two dial gages that can measure to 0.001 inch available at the site to measure the soil nail movement.

b. Minimum travel sufficient to allow performing the test without resetting the gages.

c. Align the dial gages within 5 degrees of the axis of the soil nail and support independent of the jacking set-up and the wall.

2. Jack with pressure gage:

a. An Independent Testing Laboratory must calibrate as a unit within the last 60 days.

b. Pressure gage graduated in 100 pounds per square inch increments or smaller.

c. Range for the pressure gage not more than twice the maximum anticipated pressure during the testing.

d. Ram travel for the jack is sufficient to enable performing the test without resetting the jack.

e. Capable of applying each increment load in less than one minute.

3. Load cell:

a. In accordance with as stated elsewhere in Issued for Construction Documents.

b. An Independent Testing Laboratory must calibrate within the last 60 days.

4. Reaction frame:

a. Sufficiently rigid and of adequate dimensions such that excessive deformation of the test apparatus requiring repositioning of any component does not occur during testing.

b. Where the reaction frame bears directly on the shotcrete facing, design the reaction frame to prevent fracture of the shotcrete.

2.03 HANDLING AND STORAGE

A. Store cement to prevent moisture degradation and partial hydration. Discard cement that has become caked or lumpy.

B. Soil Nail Steel:

1. Keep soil nail bars free of dirt, rust, and other deleterious material prior to installation.

2. Handle soil nail bars in such a manner so as not to overstress them.

3. Resident Engineer will reject damage to the soil nail bar because of overstressing, abrasion, cuts, nicks, welds, and weld splatter.

4. Do not allow grounding of welding leads to the soil nail steel.

5. Heavy corrosion or pitting is not permitted. Light rust that has not resulted in pitting is subject to approval by the Resident Engineer.

6. Do not transport encapsulated nails until the encapsulation grout has reached sufficient strength to resist damage during handling.

C. Geocomposite Strip Drain:

1. Protect the fabric from mud, dirt, dust, debris, and shotcrete rebound.

2. Avoid extended exposure to ultraviolet light.

PART 3 - EXECUTION

3.01 GENERAL

A. Sequence construction in accordance with the approved Soil Nail Construction Work Plan. Make no excavation steeper or higher than those specified on the approved Soil Nail Construction Work Plan above or below the soil nail wall without written authorization of the Resident Engineer.

B. Visit the site before starting construction activities to observe and document the preconstruction condition of existing structures, sidewalks, roadways, and the other infrastructure within or adjacent to the work area.

C. The utilities referenced in the Issued for Construction drawings are for informational purposes only. Field locates all utilities shown and not shown on the Issued for Construction drawings prior to starting the work. Notify the Resident Engineer of utility conflicts, and seek approval to shift soil nail locations, if required.

D. Monitor the areas behind all the shoring walls as stated elsewhere in the Issued for Construction Documents. Notify Resident Engineer if new cracks develop in the existing structures. Limit vertical and horizontal movements as specified elsewhere in Project Requirements, and as indicated on the Issued for Construction drawings. If the Resident Engineer determines that movements exceed Action Levels, take all necessary corrective actions to stop the movement, and perform repairs to the impacted structures.

3.02 PREPARATION

A. Hold a readiness review meeting before work to clarify the construction requirements and coordinate construction activities. The following parties must attend the meeting: Sound Transit, the Resident Engineer, the Contractor, the approved Subcontractors for the

excavation, soil nailing, and shotcreting and the Independent Geotechnical Engineer who will be observing the construction activities.

3.03 EXCAVATION

A. General:

1. Do not excavate beneath a preceding shotcrete lift closer than 5 feet (horizontal) until:

   a. Nail grout and shotcrete on the preceding lift has reached 50 percent of their respective 28-day compressive strengths.

   b. Installation of connection hardware and soil nail testing for the preceding lift are complete and the Resident Engineer has approved it.

B. Perform any excavation closer than 5 feet (horizontal) to the shotcrete face in accordance with the drill bench requirements described below and as shown on the approved Soil Nail Construction Work Plan:

1. During excavation of the drill bench for the next row of nails, maintain a bench to serve as a platform for the drilling equipment. Use the bench as a stabilizing berm against the final wall excavation face neat line.

2. Establish drill bench not more than 3 feet below the row of nails to be installed. Extend the bench out from the wall face a minimum distance to provide a safe working width for equipment and workers.

3. Immediately cease excavation if there is evidence either of ground movement such that soil nail wall is being adversely affected or of adjacent structures being damaged because of excavation. Take steps to stabilize the condition and notify the Resident Engineer immediately.

C. Wall Excavation:

1. Excavate to the neat line using procedures that:

   a. Prevent ground loss.

   b. Prevent swelling, air slaking or loosening of the soil face.

   c. Minimize degradation of soil bearing support below the overlying portions of the soil nail wall and below the soil nails currently being installed.

   d. Minimize soil moisture loss.

   e. Prevent ground freezing.

2. Do not excavate the ground beyond the neat line. Restore inadvertent over-excavation beyond the neat line using shotcrete as approved by the Resident Engineer.

3. Closure time:

   a. Less than 8 hours or as approved by the Resident Engineer, or,

   b. As specified in the Issued for Construction drawings or Contract Special Provisions..

4. For extensions of the closure time for approval, construct a test cut and demonstrate for each anticipated soil type that the unsupported final excavation face wall is stable throughout the proposed closure time. The Resident Engineer can revoke extensions of the closure time at any time depending on the performance of the cut face.

5. Boulders, cobbles or other intrusions that are encountered at the soil face are the responsibility of the Contractor. Design and construct shotcrete facing to the minimum specified thickness, and to the line and grade as shown on the Issued for Construction drawings, regardless of such intrusions.

3.04 TEMPORARY END OF WALL CONDITIONS

A. Where the construction sequence results in discontinuous lifts along any soil nail row, extend the ends of the lifts beyond the end of the next lower lift by at least 10 feet. Construct slopes or berms immediately beneath these stepped lifts to prevent sloughing or failure that would result in loss of face support provided by the slopes or berms.

3.05 DRILLING

A. Select drill hole diameter to provide the minimum specified grout cover over the soil nail bar and to develop the specified load carrying capacity presented in approved submittals.

B. Do not use water, mud drilling, or any other fluids to assist in cutting removal for drill holes.

C. In caving ground, the Contractor must use cased or augercast drilling methods to support the sides of the drill holes.

D. A licensed, Professional Land Surveyor must locate all soil nails prior to drilling.

E. Immediately cease drilling operations if there is evidence either of ground movement such that soil nail wall is being adversely affected or of adjacent structures being damaged because of drilling operations. Take steps to stabilize the condition and notify the Resident Engineer immediately.

3.06 SOIL NAIL BAR INSTALLATION

A. Install soil nails prior to the application of shotcrete at the location and to the length indicated on the approved Soil Nail Construction Work Plan, and in accordance with the Issued for Construction drawings. Remove bars that cannot be easily inserted to their full design length. After cleaning the drill holes sufficiently to allow unobstructed installation of the bar, reinstall bars.

B. The Contractor must use centralizers for all soil nail bars, including bars installed using cased and augercast methods.

3.07 GROUTING

A. Grout equipment must produce a uniformly mixed grout free of lumpy and undispersed cement. Use a positive displacement grout pump. Size the grouting equipment to enable grouting the entire nail in one continuous operation. Ensure the mixer continuously agitates the grout during usage.

B. Leave no drill hole open for more than one hour prior to grouting. Grout drill hole after the installation of the soil nail bar. Grouting prior to the installation of the soil nail bar is subject to the approval of the Resident Engineer upon demonstration that insertion of the soil nail bar can be achieved without difficulty after the grouting. If the Resident Engineer allows grouting prior to insertion of the soil nail bar, use neat cement grout.

C. Inject grout at the lowest point of each drill hole through a tremie pipe casing, hollow stem auger, or drill rods. Fill drill hole in one, continuous operation. Keep the end of conduit that delivers the grout below the surface of grout while withdrawing the conduit. Withdraw grouting conduit in a manner to prevent the creation of voids.

D. If the grouting of any nail is suspended for more than 30 minutes or if the quality of the grout placement results in a nail that does not satisfy the requirements of this specification, remove the steel and grout from the hole, disposed them, and replace them with fresh grout and undamaged steel.

3.08 WALL DRAINAGE

A. The Contractor must install drainage matting as shown on the Issued for Construction Drawings. Secure drainage matting to the face of the excavation with the geotextile/fabric side against the ground surface.

B. Splice the prefabricated drainage mat in accordance with the manufacturer's recommendations. The Contractor must ensure the hydraulic connection of the drainage mat to the previously installed material to avoid impeding the vertical flow of water . Connect weep pipes to the drainage matting per the manufacturer's recommendations. Seal the weep pipe during application of shotcrete to prevent shotcrete intrusion. Remove the seal after application of shotcrete.

C. Install weep pipes to be flushed to the finished face of temporary walls. At walls with permanent soil nails, the weep pipes must extend at least four inches beyond the exposed face of shotcrete lagging.

3.09 FACING INSTALLATION

A. Install shotcrete facing as indicated on the Issued for Construction documents.

3.10 FIELD QUALITY CONTROL

A. Grout Testing:

1. Test the nail grout in accordance with ASTM C109 at a frequency of no less than one test per every 50 cubic yards of grout placed, or once every week, whichever comes first.

B. Soil Nail Testing:

1. Perform verification and proof tests at locations selected by the Independent Geotechnical Engineer and approved by the Resident Engineer. Perform soil nail pull-out tests when grout reaches at least 50 percent of its specified 28-day compressive strength.

2. The Independent Geotechnical Engineer must witness, and document tests Submit results of all testing to the Resident Engineer.

3. When providing temporary casing of the unbonded length of test nails, install the casing to prevent any reaction between the casing and the grout bond length of the soil nail and the stressing apparatus.

4. Independently support the jack and center over the soil nail so that the nail does not carry the weight of the jack. Place the stressing equipment over the soil nail i so that the jack, bearing plate, and the stressing anchorage are aligned. Position the jack at the beginning of the test such that unloading and repositioning of jack during the test will not be required.

C. Test Soil Nail Unbonded Length:

1. Provide temporary unbonded lengths for each test soil nail. Isolate test soil nail bar from shotcrete facing and the reaction frame during testing. Isolation of the test soil nail through the shotcrete facing must not affect the location of the reinforcing steel under the bearing plate. The Resident Engineer may allow the incorporation of accept proof test nails in the work provided the temporary test unbonded length is fully grouted subsequent to testing.

D. Verification Testing:

1. Perform two verification tests in each anticipated major soil strata prior to installation of production nails to verify installation methods, soil nail pullout capacity, and design assumptions in accordance with FHWA requirements. The soil nails used for the verification tests will be sacrificial. Do not incorporate these soil nails into the production soil nails.

2. Construct verification test soil nails using the same methods and hole diameter as planned for the production soil nails. The Contractor must perform additional verification testing for all changes in drilling equipment or installation methods. Provide additional verification testing at no additional cost to Sound Transit.

3. Independently support the jack and centere over the nail so that the nail does not carry the weight of the jack. Position the jack properly at the beginning of the test such that unloading and repositioning of the jack during the test will not be required.

4. At least two dial gauges that can measure to 0.001 inch must be available at the site to measure the nail movement. The dial gauges must have a minimum travel sufficient to allow the test to be performed without re-setting the dial gauge. Align the gauges within 5 degrees of the axial of the nail and support it independent of the jacking set-up and the wall. Monitor the nail loads during verification tests with both a pressure gauge and electric load cell.

5. Use an unbonded length of the test soil nail of at least 3 feet within the drill hole unless approved otherwise. The unbonded length must extend from the back of the bearing plate to the top of the bonded length. Determine the bonded length of the soil nail based on grade and size to avoid exceeding the allowable bar load in accordance with FHWA-NHI-14-007; however, do not use lengths less than 10 feet. Do not exceed an allowable bar load during testing of 80 percent of the steel ultimate yield strength for grade 150 bars, or 90 percent of the yield strength for grade 75 or grade 60 bars. For GFRP bars do not exceed 50 percent of the ultimate strength of the bar during testing.

6. Determine the Verification Test Load (VTL) by multiplying the bond length of the nail by the applicable nominal pullout resistance as shown on the Issued for Construction drawings.

7. During Verification testing, incrementally load test soil nails in accordance with the following schedule:

Load	**Hold Time (minutes)[1]**
Alignment Load (AL)	1
0.13 VTL	10 (Recorded at 1, 2, 4, 5, 10)
0.25 VTL	10 (Recorded at 1, 2, 4, 5, 10)
0.38 VTL	10 (Recorded at 1, 2, 4, 5, 10)
0.5 VTL	10 (Recorded at 1, 2, 4, 5, 10)

0.63 VTL	10 (Recorded at 1, 2, 4, 5, 10)
0.75 VTL (Creep Test)	60 (Recorded at 1, 2, 4, 5, 6, 10, 20, 30, 50, 60)
0.88 VTL	10
1.00 VTL	10
AL	1[2]

SCHEDULE NOTES:

[1] Measure soil movement after achieving each load increment has and at each time step.

[2] Record permanent soil nail movement.

8. For the alignment load (AL), the minimum load required to align the testing apparatus does not exceed 0.025 VTL. Reset dial gauges to zero after applying the alignment load. Measure nail movement to the nearest 0.001 inch with respect to an independent fixed reference point at each increment of load.

E. Proof Testing:

1. Perform proof testing on approximately 5 percent of the production soil nails in each shotcrete lift, or one nail per row, whichever is greater.

2. Proof tests are single-cycle tests in which the load is applied in increments to a maximum proof test load (PTL).

3. The maximum load in the proof test is the bonded length times the nominal pullout resistance (per unit length) x 0.75.

4. Proof tests are conducted according to the following loading schedule:

Load	Hold Time (minutes)[3]
Alignment Load [1] (AL)	1
0.17 PTL	Until Movement Stabilizes [4]
0.33 PTL	Until Movement Stabilizes
0.50 PTL	Until Movement Stabilizes
0.67 PTL	Until Movement Stabilizes
0.83 PTL	Until Movement Stabilizes
1.00 PTL (Creep Test) [2]	10 recorded at 1, 2, 4, 5, 6, and 10
AL	1

SCHEDULE NOTES:

[1] AL = alignment load must be less than 0.025 PTL.

[2] If the nail movement measured between 1 and 10 minutes exceeds 0.04 inch, the Contractor must maintain PTL for 50 additional minutes and record movements at 20, 30, 50 and 60 minutes. Record the permanent soil movement.

[3] Measure times after achieving the target load in each increment.

[4] If the soils reinforced with nails are relatively susceptible to deformation of creep, hold each load increment for 10 minutes and record the soil nail movement at 1, 2, 5, and 10 minutes.

5. The Resident Engineer may allow to incorporate successful proof test nails meeting the acceptance criteria as production nails, provided that (1) the unbonded test length of the nail hole has not collapsed during testing, (2) the minimum required hole diameter has been maintained, and (3) the test nail length and bar

size are equal to or greater than the scheduled production nail length and bar size. Grout the unbonded nail length for test soil nails meeting these requirements.

F. Test Nail Acceptance Criteria:

1. The Resident Engineer will consider test nails acceptable when:

a. For verification tests, a creep rate less than 0.04 inch per log cycle between the 1- and 10-minute readings at 0.75 VTL, a creep rate less than 0.08 inch per log cycle of time between the 6- and 60-minute readings at 0.75 VTL is observed, and the rate is linear or decreasing throughout the creep test load hold period.

b. For proof tests, a creep test rate less than 0.04 inch per log cycle of time between the 1- and 10-minute readings is observed. If this is exceeded, the Contractor must extend the creep test to achieve a creep rate less than 0.08 inch per log cycle of time between the 6- and 60-minute readings, and the creep rate is linear or decreasing throughout the creep test load hold period.

c. The total movement at the maximum test load exceeds 80 percent of the theoretical elastic elongation of the test nail unbonded length.

d. A pullout failure does not occur during testing. Pullout failure is defined as the load at which attempts to increase the test load result in continued pullout movement of the test nail.

G. Inadequate Soil Nail Performance

1. The Resident Engineer will evaluate the results of each verification test. Do not a pply installation methods that do not result in satisfactory testing results . Propose alternate methods and perform additional replacement verification tests if the installation methods are deemed inadequate. Install replacement test soil nails and test at no extra cost to Sound Transit.

2. The Resident Engineer will evaluate the results of each proof test. The Resident Engineer may require that the Contractor replace some or all production soil nails represented by an inadequate proof test soil nail. Alternatively, the Resident Engineer may require to install additional proof test soil nails and test them to verify the adequacy of the previously installed soil nails. The cost associated with installing and testing of additional test soil nails because of poor test nail performance will be the responsibility of the Contractor unless otherwise determined by the Resident Engineer to be due to causes beyond the Contractor's control.

3.11 SOIL NAIL TOLERANCE

A. Do not extend soil nails beyond indicated right-of-way or easement limits, unless approved otherwise by the Resident Engineer.

B. Center bars within 1 inch of the center of the drill hole.

C. Position individual soil nails at the locations shown on approved Soil Nail System Plan.

D. Install nails at a nail splay angle of plus or minus 3 degrees of angle shown on approved submittals, unless clearances to utilities will be less than minimum values.

E. Relocate nails that encounter unanticipated obstructions or remove obstructions.

F. Replace nails that do not meet the tolerance criteria due to construction methods.

3.12 SOIL NAIL INSTALLATION RECORD

A. Document and maintain accurate records of the soil nail wall construction. Include soil nail locations, top of wall elevations, and other information requested by the Resident Engineer.

END OF SECTION

SECTION 31 63 00

DRILLED SHAFT FOUNDATIONS

PART 1 - GENERAL

1.01 SUMMARY

A. Section includes:

1. Requirements for furnishing all materials, labor, tools, equipment, services, and incidentals necessary to construct drilled shaft foundations in accordance with the Contract Drawings.

1.02 REFERENCES

A. This Section incorporates by reference the latest revision of the following:

1. American Association of State Highway and Transportation Officials (AASHTO):

a. AASHTO LRFD Bridge Design Specifications, Section 10.8, Drilled Shafts.

2. American Concrete Institute (ACI):

a. ACI 336.1-01 Specification for the Construction of Drilled Piers.

3. American Society for Testing and Materials International (ASTM):

a. ASTM D1143/D1143M Standard Test Methods for Deep Foundations Under Static Axial Compressive Load.

b. ASTM D3689/D3689M Standard Test Methods for Deep Foundations Under Static Axial Tension Load.

c. ASTM D3966/D3966M Standard Test Methods for Deep Foundations Under Lateral Loads.

d. ASTM D6760 Standard Test Method for Integrity Testing of Concrete Deep Foundations by Ultrasonic Crosshole Testing.

4. American Welding Society (AWS):

a. ANSI/AWS D1.4 Structural Welding Code – Reinforcing Steel.

5. American Petroleum Institute (API):

a. API RP 13B-1 Recommended Practice for Field Testing Water Based Drilling Fluids.

6. Washington State Department of Transportation (WSDOT):

a. Standard Specifications for Road, Bridge and Municipal Construction.

B. Definitions:

1. Disturbed Soil: Soil whose geotechnical properties have been changed from those of the original in-situ soil, and whose altered condition adversely affects the structural integrity of the shaft foundation.

2. Obstruction: A specific object which significantly reduces the rate of drilling relative to the rate of advance of the drilling for the rest in the geological unit containing the obstruction. Obstructions do not include logs and timber piling.

3. Open Shaft Excavation: A shaft excavation that has not been filled with concrete or temporarily backfilled.

4. Pause: A momentary interruption of the drilling operation to splice casing, change tools, maintain slurry, or remove obstructions.

5. Permanent Casing: Casing designed as part of the shaft structure and to remain in place after construction is complete.

6. Stop: A momentary interruption of the drilling operation not conforming to the definition of a pause.

7. Temporary Casing: Casing installed only to facilitate shaft construction, and to be removed completely after construction is complete, unless otherwise shown in the Contract Drawings.

1.03 SUBMITTALS

A. Submit:

1. Concrete Mix Designs: Section 03 05 15 - Cement Concrete.

2. Concrete Reinforcing: Section 03 20 00 - Concrete Reinforcing. Include bracing and any extra reinforcing steel required for fabrication, transportation, and installation, and details of the proposed reinforcing cage spacers.

3. Shop Drawings for Permanent Casings.

4. Construction Work Plan (CWP): Submit a CWP providing at least the following information:

a. An overall construction operation sequence and the sequence of drilled shaft construction. Reference the available subsurface data provided in the contract test hole boring logs and the geotechnical report.

b. Description and capacities of proposed equipment, including but not limited to cranes, drills, auger, bailing buckets, final cleaning equipment, and drilling unit. Describe its suitability to the anticipated site and subsurface conditions. Include a project history of the equipment demonstrating the successful use of shafts of equal or greater size in similar site and subsurface conditions.

c. Description of shaft excavation methods, including proposed drilling methods, methods for cleanout of the shafts, and a disposal plan for excavated material and drilling slurry (if applicable). Include a review of method suitability to the anticipated site and subsurface conditions.

d. Description of the methods to ensure shaft stability (i.e., prevention of caving, bottom heave, etc. using temporary casing, slurry, or other means) during drilling and concrete placement. Include provisions for pauses and

stops in drilling. Include a review of suitability to the anticipated site and subsurface conditions. If temporary casings are proposed or required, provide casing dimensions and procedures for installation and removal.

e. Procedures for mixing, installing, maintaining, and disposing of the slurry (if applicable). Provide a detailed mix design and a discussion of its suitability to the anticipated subsurface conditions for the proposed slurry.

f. Plan for quality control of the selected slurry, including tests and test methods, and minimum and/or maximum property requirements to ensure that the slurry functions as intended. Take into consideration the anticipated subsurface conditions and shaft construction methods, in accordance with the slurry manufacturer's recommendations. As a minimum, include the following tests:

1) Density: Mud Weight (Density), API RP 13B-1.

2) Viscosity: Marsh Funnel and Cup, API RP 13B-1.

3) pH: Glass electrode, pH meter or pH paper.

4) Sand Content: Sand, API RP 13B-1.

g. Description of method used to fill or eliminate all voids below the top of shaft between the plan shaft diameter and excavated shaft diameter.

h. Description of reinforcement placement. Include bracing, centering, and lifting methods, and the method to maintain the position of the reinforcing cage position during construction.

i. Description of concrete placement. Include proposed pumping and/or tremie methods, and a sample uniform yield form to plot the volume of concrete place versus the depth of shaft.

j. Description of the methods to construct the column, and the portion of the shaft above the upper construction joint and below existing ground.

k. Description of emergency horizontal construction joint during concrete placement.

l. Description of the device to prevent unauthorized entry into a shaft excavation.

m. Description of the methods to temporarily backfill a shaft excavation during a stoppage. Include backfill material and the methods to place and remove it.

n. Description of shaft vibration monitoring plan to the Resident Engineer for approval, including a description of the monitoring equipment, and the installation and monitoring procedure. The monitoring equipment must be sensitive enough to detect a Peak Particle velocity of 1/4 inch per second.

B. Transmit:

1. Qualifications: Qualifications for the following demonstrating conformance:

a. Drilled Shaft Construction Contractor.

b. On-site supervisors.

c. Drill rig operators.

d. Personnel performing non-destructive testing.

e. Welders.

2. Synthetic Slurry:

a. When using the synthetic slurry, keep a written record of all additives and concentrations of the additives in the synthetic slurry. Transmit these records to the Resident Engineer after establishing the slurry system in the first drilled shaft on the project.

3. Synthetic Slurry Technical Assistance:

a. If using the synthetic slurry to construct the shafts, provide, or arrange for technical assistance in its use. Transmit one of the following to the Resident Engineer for record:

1) The name and current phone number of the synthetic slurry manufacturer's technical representative assigned to the project.

2) The name(s) of the Contractor’s personnel assigned to the project and trained by the synthetic slurry manufacturer in the proper use of the synthetic slurry. The submittal must include a signed training certification letter from the synthetic slurry manufacturer for each trained Contractor’s employee listed, including the date of the training.

1.04 QUALITY ASSURANCE

A. Qualifications:

1. Drilled Shaft Construction Contractor: Successful completion of at least three (3) separate drilled shaft foundations projects within the past five (5) years with drilled shafts equal to or larger than those shown in the Issued for Construction Drawings with similar site and subgrade conditions. Include contact information for the project owner’s representative.

2. On-Site Supervisors: A minimum of two (2) years of experience in supervising construction of drilled shaft foundations with similar site and subgrade conditions.

3. Drill Rig Operators: A minimum of one (1) year of experience in construction of drilled shaft foundations.

4. Non-Destructive Testing:

a. Organization: A minimum of three (3) drilled shaft foundation projects in the last two (2) years.

b. Personnel: A minimum of two (2) years of experience in cross hole sonic log testing and interpretation.

c. The Resident Engineer will suspend the drilled shaft construction if the Contractor substitutes unqualified personnel.

B. Shaft Construction Tolerances:

1. Construct drilled shafts such that the center at the top of the shaft is within the following horizontal tolerances:

a. Diameter less than or equal to 2 feet: 3 inches.

b. Diameter greater than 2 feet and less than 5 feet: 4 inches.

c. Diameter 5 feet and greater: 6 inches.

2. Install shafts within 1.5 percent of plumb.

C. Reinforcing Placement Tolerances:

1. Top of reinforcing cage: plus 6 inches, minus 3 inches.

2. Spacing of bend and ends of bars: plus, or minus 1 inch.

3. Length of bar laps: minus 1 - ½ inch.

D. Shaft Vibration Monitoring: Provide and operate monitoring equipment able to detect a peak particle velocity of 1/4 inch per second.

E. Nondestructive Testing of Shafts:

1. Provide access tubes.

2. Perform cross hole sonic log testing of specific shafts.

F. Preconstruction Conference:

1. If using the synthetic slurry to construct the shafts, discuss the frequency of scheduled site visits by the manufacturer's representative. Discuss the list of materials specified in the Record of Materials (ROM) form for this item of work. Those attending must include:

a. The superintendent on-site supervisors, and all foremen in charge of excavating the shaft, placing the casing and slurry as applicable, placing the steel reinforcing bars, and placing the concrete. If using the synthetic slurry to construct the shafts, the slurry manufacturer's representative and the Contractor's employee trained in the use of the synthetic slurry must also attend.

b. The Resident Engineer and key inspection and design personnel.

2. If the Contractor's key personnel change, or if the Contractor proposes a significant revision of the approved shaft installation plan, hold an additional conference before performing any additional shaft construction operations.

1.05 SEQUENCING AND SCHEDULING

A. Schedule drilling or excavating, installation of reinforcing steel and concrete placement to place each excavated shaft immediately after drilling or other excavating is complete and reinforcing steel is placed.

B. Provide means to prevent heavy vibration or excessive wheel loads within the immediate vicinity of shaft excavation. Always maintain stable excavation.

PART 2 - PRODUCTS

2.01 MATERIALS

A. Temporary and Permanent Casing:

1. Furnish temporary and permanent casing in accordance with the contract drawings.

2. Furnish all casing to be watertight and clean prior to placement in the excavation.

3. Provide the casing with the outside diameter of the casing no less than the specified diameter of the shaft; and with the inside diameter of the casing no greater than the specified diameter of the shaft plus 6 inches, except as otherwise noted for drilled shafts 5 feet or less in diameter. Provide the casing with the inside diameter of casing for drilled shafts 5 feet or less in diameter no greater than the specified diameter of the drilled shaft plus 1 foot.

4. Smooth wall structure of steel base metal. All casing must be of ample strength to resist damage and deformation from transportation and handling, installation and extraction stresses, and all pressures and forces acting on the casing. Provide the casing that can be removed without damaging the casing, deforming, or damaging the completed shaft, and without disturbing the surrounding soil.

B. Slurry (if applicable):

1. Mineral Slurry: Do not use mineral slurry.

2. Synthetic Slurry: Acceptable products:

a. Novagel, by Geo-Tech Services, LLC.

b. ShorePac, by CETCO.

c. SlurryPro CDP, by KB International, LLC.

d. SuperMud, by PDS Company (liquid product only).

e. Provide synthetic slurry with the following properties.

Property	Test Method	Requirement
Density (pcf)	Mud Weight (Density), API 13B-1, Section 1	64 maximum
Viscosity (sec./quart)	Marsh Funnel and Cup, API 13B-1, Section 2-2	32 – 135 Slurry specialist must submit a request for approval if viscosity is higher than 135 sec./ quart.
pH	Glass electrode, pH Meter	6 – 11.5
Sand Content (percent) before final cleaning and immediately before placing concrete	Sand, API RP 13b-1	1.0 maximum

3. Water Slurry (with or without site soils):

a. Use water with or without site soils as slurry when using casing for the entire length of the drilled hole. Use of water slurry without full-length casing requires the approval of the Resident Engineer.

b. Provide water slurry with the following properties in conformance with API RP 13B-1. The slurry temperature must be at least 40 degrees Fahrenheit when tested.

Property	Test Method	Requirement
Density (pcf)	Mud Weight (Density)	64 maximum
Sand Content (percent) before final cleaning and immediately before placing concrete	Sand, API RP 13B-1	1.0 maximum

C. Access Tubes for Crosshole Sonic Log Testing:

1. Steel pipe (Schedule 40) with minimum 0.145-inch wall thickness and minimum 1-1/2 inch inside diameter.

2. Furnish and install one access tube for each foot of shaft diameter, rounded to the nearest whole number. Provide at least 4 access tubes.

3. Round, regular inside diameter free of defects and obstructions (loose rust, scale, dirt, paint, oil, and other foreign material), including all pipe joints, able to permit the free, unobstructed passage of 1.3-inch maximum diameter source and receiver probes.

4. Watertight, free from corrosion with clean internal and external faces to ensure good bond between concrete and tubes. Fit tubes with watertight caps on the bottom and the top.

D. Reinforcing Steel:

1. Conform to the concrete reinforcing in Section 03 20 00 - Concrete Reinforcing.

E. Concrete Material:

1. Conform to the cement concrete materials in Section 03 05 15 - Cement Concrete.

F. Grout:

1. For sealing access tubes: Neat cement with a maximum water/cement ratio of 0.45.

PART 3 - EXECUTION

3.01 SHAFT EXCAVATION

A. During shaft excavation, make frequent checks on the plumbness, alignment, and dimensions of the shaft. Correct any deviations exceeding the allowable tolerances following a procedure approved by the Resident Engineer.

B. Once started, conduct the shaft excavation in a continuous operation until completing the excavation of the shaft, except for pauses and stops as noted.

C. Pauses: Do not allow pauses during excavation except for casing splicing, tooling changes, slurry maintenance, and removal of obstructions.

D. Stops: Stops for uncased or partially cased excavations must not exceed 16 hours. Stops for fully cased excavations must not exceed 65 hours. For stops exceeding the times stated above, stabilize the excavation with one or both of the following:

1. Install casing to the depth of the excavation. Prior to removing the casing and resuming excavation, sound the annular space between the casing and the excavation. If the sounding indicates that caving has occurred, do not remove the casing. Stabilize the excavation in conformance with the approved CWP before resuming drilling.

2. Backfill the excavation in conformance with the approved CWP. Backfill to the ground surface if the excavation is not cased, or at least 5 feet above the bottom of casing if the excavation is cased.

3. If using the slurry, maintain the minimum level of slurry and slurry properties during the stop. During stops, stabilize the shaft excavation to prevent bottom heave, caving, head loss, and loss of ground.

E. Do not leave excavations open overnight unless cased full depth.

F. Do not operate drilling equipment from an existing bridge, unless approved by the Resident Engineer.

G. Use appropriate means such as a cleanout bucket or air lift to clean the bottom of the excavation of all shafts. Leave no more than 2 inches of loose or disturbed material at the bottom of the shaft.

H. Allow the Resident Engineer to inspect the shaft before proceeding with construction. Sound the bottom of the excavated shaft using an air lift pipe, a tape with a heavy weight, or other means acceptable to the Resident Engineer.

3.02 TEMPORARY CASING

A. Provide temporary casing if required to maintain a stable excavation and facilitate construction. Provide enough quantities to meet the anticipated construction method's needs.

B. Ensure the casing is watertight and clean before placement in the excavation.

C. Advance casing prior to or concurrently with excavation. Do not advance excavation ahead of casing tip at any time.

D. Do not disturb the adjacent soil outside the casing and shaft excavation for the full height of the shaft when installing and removing temporary casing.

3.03 UNEXPECTED REMOVAL OF STRUCTURES OR OBSTRUCTIONS FOR DRILLED SHAFTS

A. The Contractor must immediately notify the Resident Engineer, upon discovery and before the conditions are further disturbed, verbally and in writing of a structure or obstruction (a specific object including boulders, logs and manmade objects) encountered during a drilled shaft operation that prevents advancement of a drilled shaft and is not otherwise identified in the Contract documents.

B. Remove shallow structures or obstructions without additional compensation. Locate shallow structures or obstructions within 5 feet of the surface of the excavated ground prior to drilling or as otherwise identified in the Contract documents.

C. The Resident Engineer will solely judge the determination and significance of any unexpected structures or obstructions and the classification of the specific object.

D. The Contractor must remove all structures or obstructions encountered at drilled shaft locations. Propose the removal method of such obstructions to get the approval from the Resident Engineer before continuing the excavation. The removal method for structures or obstructions will require special procedures and tools such as: chisels, bolder breakers, core barrels, down-the-hole hammers, air tools, hand excavation, temporary casing and increasing the hole diameter.

E. After providing Notice and upon receiving direction from the Resident Engineer, the Contractor must continue performing all the Work and maintain its progress to the extent possible with the work pending resolution of the unexpected removal of a structure or obstruction.

F. If the unexpected removal of a structure or obstruction results in idled or stopped drilled shaft excavation or support equipment, treat the standby cost for the first eight (8) work hours of idled equipment duration as incidental to the performance of the Contract. For the cost of drilled shaft excavation or support equipment that is idled or stopped more than the cumulative eight (8) work hours and cannot be reasonably reassigned within the Project, the Resident Engineer will determine and reimburse it as the standby equipment.

G. Any drilling tools and other equipment that are lost in drilled shaft excavation are not structures or obstructions. Remove them promptly without compensation. The Contractor must bear all costs related to lost tool removal including any remediation.

3.04 SLURRY (IF APPLICABLE)

A. Use slurry to maintain the stability of the drilled hole wall during excavation and concrete placement once water begins to enter the shaft and remain present at a depth of 6 inches or greater:

1. If the casing is adequately sealed into competent soils such that water does not enter the excavation, Resident Engineer may allow excavation to continue in wet soils provided the water level within the casing does not rise or exhibit flow.

B. Synthetic Slurry Technical Assistance:

1. Use synthetic slurries in conformance with the manufacturer's written directions.

2. If using the synthetic slurry, either a manufacturer's representative or a Contractor’s employee trained in the use of the synthetic slurry must provide technical assistance for the use of the synthetic slurry, be at the site prior to introduction of the synthetic slurry into a drilled hole, and must remain at the site during the construction and completion of at least one (1) shaft to adjust the slurry mix to the specific site conditions.

3. After the manufacturer’s representative is no longer present at the site, Contractor’s trained employee must present at the site throughout the remainder of the slurry operations to furnish technical assistance.

C. Minimum Level of Slurry in the Excavation:

1. When using the slurry to stabilize the excavation, maintain the slurry level in the excavation above the groundwater level among the greatest of the following:

a. Ten feet for water slurries.

b. Ten feet for synthetic slurries, except when the slurry manufacturer recommends a lesser dimension for the site conditions and construction method.

c. One shaft diameter.

d. As required to provide and maintain a stable excavation.

2. Provide casing or other means as necessary to meet these requirements.

3. Maintain the slurry level above all unstable zones a sufficient distance to prevent bottom heave, caving, or sloughing.

4. Throughout all stops in shaft excavation operations, monitor and maintain the slurry level in the excavation the greater of the following elevations:

a. No lower than the water level elevation outside the shaft.

b. Elevation as required to provide and maintain a stable hole.

D. Clean, recirculate, de-sand, or replace the slurry to maintain the required slurry properties.

E. Demonstrate to the satisfaction of the Resident Engineer that stable conditions are being maintained. If the Resident Engineer determines that stable conditions are not being maintained, immediately take action to stabilize the shaft. Submit a revised shaft installation plan that addresses the problem and prevents future instability. Do not continue with shaft construction before repairing the damage. The repair must conform to the revised shaft installation plan that is approved by the Resident Engineer.

F. Dispose slurry and slurry-contacted spoils in accordance with the approved CWP and the following:

1. Water slurry with no additives is permitted to be infiltrated to uplands within the confines of the right-of-way for the project, provided that the ground surface at the disposal site is at least 5 feet above the current water table, and that disposal operations conform to the temporary erosion and sedimentation control (TESC) requirements established for the project. For the water slurry disposal, upland is an area that has no chance of discharging directly to waters of the state, including wetlands or conveyances that indirectly head to them.

2. Dispose of Synthetic slurry and water slurry with polymer-based additives at an approved facility. Acquire all permits or approvals necessary for slurry disposal before beginning shaft excavation operations. Provide copies of all permits or approvals to the Resident Engineer before beginning shaft excavation operations. Contain and dispose spoils in contact with synthetic slurry or water slurry with polymer-based additives at an approved waste facility. Before beginning shaft excavation operations, coordinate with the waste facility operator and Jurisdictional Health Department (JHD) to determine requirements for shaft spoils disposal at the facility. Submit the location of the waste facility, requirements for disposal of shaft spoils (as approved by the waste facility operation and the JHD), copies of any permits required and obtain, and any associated test results to the Resident Engineer before disposal. Stockpile spoils on 6-mil plastic, cover them with another layer of 6-mil plastic to protect from runoff, and await approval from the waste facility operator and JHD before disposing of the spoils.

3.05 PLACING REINFORCING

A. Rigidly brace the reinforcing cage to retain its configuration during handling and construction. Do not place individual or loose bars.

B. Carefully position and securely fasten the reinforcing to provide the minimum clearances listed below, and to ensure that no displacement of the reinforcing steel bars occurs during placement of the concrete.

C. Place reinforcing steel spacers at least at the quarter points around the circumference of the steel reinforcing bar cage, and at a maximum longitudinal spacing of either 2.5 times the shaft diameter or 20 feet, whichever is less. Check the elevation of the top of the steel cage before and after placing the concrete. If the cage is not within the specified tolerances, correct, and do not construct additional shafts until receiving approval from the Resident Engineer.

D. Place bars as shown in the Issued for Construction Documents with minimum concrete cover as noted:

1. Shaft diameter less than or equal to 3 feet: 3 inches.

2. Shaft diameter greater than 3 feet and less than 5 feet: 4 inches.

3. Shaft diameter greater than 5 feet: 6 inches.

E. For shafts with temporary casing within 15 feet of the bottom of shaft elevation as noted on the Issued for Construction Drawings, Resident Engineer may allow use of quarry spalls or other rock backfill below the specified bottom of shaft elevation to support the reinforcing cage.

3.06 INSTALLING ACCESS TUBES FOR CROSSHOLE SONIC LOGGING

A. Install access tubes for crosshole sonic log testing in all drilled shafts except those constructed completely in the dry excavation and shafts less than 3 feet in diameter.

B. Extend tubes with mechanical couplings. Do not use the duct tape or other wrapping material to seal the joints and do not butt weld joints. When using couplings, record their locations.

C. Securely attach the access tubes to the interior of the reinforcement cage of the shaft. Furnish and install one access tube for each foot of shaft diameter, rounded to the nearest whole number, but not less than four (4), as shown in the Issued for Construction Documents. Place the access tubes around the shaft, inside the spiral or hoop reinforcement, and bundle with the vertical reinforcement. Where circumferential components of the rebar cage bracing system prevent bundling the access tubes direction to the vertical reinforcement, place the access tubes inside the circumferential components of the rebar cage bracing system as close as possible to the nearest vertical reinforcement bar.

D. Install access tubes in straight alignment and as near to parallel to the vertical axis of the reinforcement cage as possible. Extend access tubes from the bottom of the reinforcement cage to at least 2 feet above either the top of the continuous concrete placement operation or the top of the shaft. Make all joints required to achieve full-length access tubes. Clear the access tubes of all debris and extraneous materials before installing the access tubes. Take care not to damage the access tubes during reinforcement cage installation operations in the shaft excavation.

E. Fill the access tubes with potable water as soon as possible after concrete placement (and no later than 1 day) and reinstall the top watertight caps.

3.07 PLACING CONCRETE

A. Conform to Section 03 30 00 - Cast-In-Place Concrete.

B. Place concrete immediately after completion of excavation by the Contractor and inspection by the Resident Engineer. Continue placing concrete in one operation to the top of the shaft, or as shown in the Issued for Construction Drawings. Place concrete between the upper construction joint of the shaft and the top of the shaft in the dry.

C. During concrete placement, monitor and minimize the difference in the level of concrete inside and outside the steel reinforcing cage. Conduct placement operations to maintain a maximum 1-foot differential.

D. When placing concrete in the dry, vibrate only the top five (5) feet of concrete and the entire depth of the shaft-column reinforcing splice zone. If using a temporary casing, remove it before vibration. When using a temporary casing, it is acceptable to remove the casing with a vibratory hammer during concrete placement. Vibration of the top five (5) feet of concrete must not affect the maximum slump allowed for the concrete class specified.

E. If water is not present (less than 3 inches), deposit the concrete through the center of the reinforcement cage by a method that prevents segregation of aggregates and splashing of concrete on the reinforcement cage. Place the concrete such that the fall is vertical down the center of the shaft without hitting the sides of the drilled hole, the steel reinforcing bars, or the steel reinforcing bar cage bracing. Do not use laborers with shovels to direct the stream of concrete. Do not allow free fall of concrete for more than ten (10) feet, use a concrete pump or tremie instead.

F. When placing concrete underwater, use a concrete pump or tremie. A tremie must have a hopper at the top that empties into watertight tube at least 8 inches in diameter. If using a , the Contractor must use a watertight tube with a minimum diameter of four (4) inches. The discharge end of the tube on the tremie or concrete pump must include a device to seal out water while the tube is first filled with concrete.

G. Throughout the underwater concrete placement operation, keep the discharge end of the tube submerged in the concrete at least five (5 feet) and enough concrete in the tube to prevent water from entering. Place concrete continuously until completing the work and resulting in a seamless, uniform shaft. If the concrete placement operation is interrupted, the Resident Engineer will require the Contractor to prove by core drilling or other tests that the shaft contains no voids or horizontal joints. If testing reveals voids or joints, issue a Non-Conformance Report (NCR) for the approval from the Resident Engineer.

H. Before placing fresh concrete against concrete deposited in water or slurry, remove all scum, laitance, loose gravel, and sediment on the upper surface of the concrete deposited in water or slurry, and chip off high spots on the upper surface of the existing concrete that would prevent the steel reinforcing bar cage from being placed in the position required by the Issued for Construction Drawings.

I. Before performing any crosshole sonic logging, remove the concrete at the top of the shaft down to sound concrete.

3.08 REMOVING CASING (IF APPLICABLE)

A. Maintain at least five (5)-foot head of concrete while removing the temporary casing. Completely remove all temporary casings.

3.09 FIELD QUALITY CONTROL

A. Uniform Yield Form: Complete a uniform yield form for each shaft, consistent with the sample form submitted with the CWP.

B. Slurry Sampling and Testing:

1. Mix and thoroughly hydrate synthetic slurry in slurry tanks, ponds, or storage areas.

2. Draw sample sets from the slurry storage facility and test the samples for conformance with the appropriate specified material properties before beginning slurry placement in the drilled hole. Take samples at top, mid height, and within

two (2) feet of the bottom of the storage area. Use a three-part sampler with top and bottom plugs.

3. Sample and test all slurry in the presence of the Resident Engineer, unless otherwise directed. Record the date, time, names of the persons sampling and testing the slurry, and the results of the tests. Submit a copy of the recorded slurry test results to the Resident Engineer at the completion of each shaft, and during construction of each shaft when requested by the Resident Engineer.

4. When using the synthetic slurry, keep a written record of all additives and concentrations of the additives in the synthetic slurry. Transmit these records to the Resident Engineer after establishing the slurry system in the first drilled shaft on the project. Provide revised data to the Resident Engineer when making changes to the type or concentration of additives during construction.

5. Sample the slurry at the beginning and end of shift, top, mid height and within two (2) feet of the -bottom of the shaft, and test during drilling as necessary to verify the control of the properties of the slurry. Take and test sample sets of synthetic slurry at least once every four (4) hours after beginning its use during each shift. Take and test sample sets of all slurries at least once every two (2) hours if the slurry is not recirculated in the drilled hole or if the previous sample set did not have consistent specified properties. Recirculate all slurry, or agitate with the drilling equipment, when tests show that the sample sets do not have consistent specified properties.

6. Take sample sets of all slurry and test prior to final cleaning of the bottom of the hole and again just before placing concrete. Do not start cleaning the bottom of the hole and placement of the concrete until tests show that the samples taken have consistent specified properties.

C. Non-Destructive Testing of Drilled Shafts (Crosshole Sonic Logging):

1. Perform crosshole sonic log testing and analysis on all completed shafts greater than 3 feet. No need to perform testing if the shaft is constructed completely in dry hole.

2. Provide 48 hours of notice to the Resident Engineer prior to the time of crosshole sonic log testing.

3. Perform the testing after the shaft concrete has cured at least 96 hours.

4. After placing the shaft concrete and before beginning the crosshole sonic log testing of a shaft, inspect the access tubes. Replace each access tube that the test probe cannot pass through, at the Contractor's expense, with a 2-inch diameter hole cored through the concrete for the entire length of the shaft. Unless directed otherwise by the Resident Engineer, locate cored holes approximately 6 inches inside the reinforcement and must not damage the shaft reinforcement. Log descriptions of inclusions and voids in cored holes and submit a copy of the log to the Resident Engineer. Preserve samples from cored holes, identify them by location, and make them available for inspection by the Resident Engineer.

5. The Resident Engineer will determine final acceptance of each shaft, based on the crosshole sonic log test results and analysis for the tested shafts, and will provide a response to the Contractor within three (3) working days after receiving the test results and analysis submittal. Submit a Non-Conformance Report (NCR) to the Resident Engineer when the CSLs results cannot provide the verification.

6. For shafts determined to be nonconforming, submit an NCR with a plan for remedial action to the Resident Engineer for approval. Remedial action plan must include all modifications to the dimensions of the shafts, supporting calculations

with the PE stamp and working drawings. Do not begin repair operations until receiving the Resident Engineer's approval of the NCR. If the Contractor determines it is not feasible to repair the rejected pile, submit an NCR with a mitigation plan for replacement or supplementation of the rejected pile.

7. If the Resident Engineer determines that the concrete placed under slurry for a given shaft is nonconforming, that shaft will be rejected. Suspend the placement of concrete under slurry until the Contractor submits to the Resident Engineer written changes to the methods of shaft construction needed to prevent future structurally inadequate shafts and receives the Resident Engineer's written approval of the submittal.

D. Coring:

1. At the Resident Engineer's request, drill a core hole in any questionable quality shaft (as determined from crosshole sonic log testing and analysis or by observation of the Resident Engineer) to explore the shaft condition. The Contractor must submit to the Resident Engineer for approval of the proposed investigation method in any questionable quality shaft (as determined from crosshole sonic log testing and analysis or by observation of the Resident Engineer) to explore the shaft condition.

2. Prior to beginning coring, submit the method and equipment used to drill and remove cores from shaft concrete to the Resident Engineer and receive the Resident Engineer’s written approval. The coring method and equipment must provide for complete core recovery and must minimize abrasion and erosion of the core. Do not damage the shaft reinforcement during coring.

3. Coring logs must include core recovery, rock quality designation, locations of breaks, and complete descriptions of inclusions and voids encountered during coring.

E. Dewater all access tubes and cored holes and fill with grout after completing tests. Use grout tubes that extend to the bottom of the access tube or hole or into the grout already placed.

F. The Contractor must bear any costs including the schedule delay resulting from nonconforming drilled shafts.

3.10 PROTECTION

A. The Contractor’s construction operation in the vicinity of a drilled shaft excavation with freshly placed concrete and curing concrete must be in accordance with WSDOT Specifications 6-02.3(6)D, D1 and D2.

END OF SECTION

SECTION 32 08 80

COMMISSIONING OF EXTERIOR IMPROVEMENTS OF IRRIGATION SYSTEMS

NOTE TO DESIGNER:

SECTIONS WITH BRACKETS. E.G., [TEXT] ARE TO BE MODIFIED OR DELETED IF NOT APPLICABLE. ITALICIZED TEXT PROVIDES INSTRUCTION TO THE DESIGNER TO INCLUDE LANGUAGE ON SPECIFIC TOPICS WHEN APPLICABLE. THE INSTRUCTIONS ARE TO BE DELETED WHEN THE SPECIFICATION IS FINALIZED. LANGUAGE NOT IN BRACKETS IS TO BE USED 'AS IS' WITHOUT MODIFICATION OR WITH AN APPROVED SPECIFICATION MODIFICATION REQUEST.

DESIGNER TO DELETE TEXT ABOVE FOR FINAL SECTION

PART 1 - GENERAL

1.01 SUMMARY

A. Section Includes:

1. Requirements for commissioning process for Exterior Improvements

a. Level 1 commissioning activities for Exterior Improvements of the irrigation systems.

b. Support for Level 2 commissioning activities for Exterior Improvements of the irrigation systems.

c. Support for Level 3 commissioning activities related to Exterior Improvements of the irrigation systems.

d. Support for Level 4 commissioning activities related to Exterior Improvements of the irrigation systems.

B. Definitions:

1. See general commissioning requirements as stated in the Contract Documents for commissioning definitions.

2. Systems, Equipment, and Components: Where these terms are used together or separately, they shall mean "as-built" systems, equipment, and components.

1.02 COORDINATION

A. See general commissioning requirements as stated in the Contract Documents for general coordination requirements related to commissioning.

1.03 COMMISSIONING ACTIVITIES

A. Furnish labor and material to accomplish irrigation commissioning as specified as part of general commissioning requirements as stated in the Contract Documents and including, but not limited to:

1. Provide to the Testing and Commissioning Manager Preliminary O&M information for use in developing commissioning test procedures.

2. Assist the Testing and Commissioning Manager in developing commissioning activity procedures and data forms submittals for work specified in this Section.

3. Provide information to the Testing and Commissioning Manager needed for control interface wiring diagrams submittals for the work of this Section, if applicable.

4. Perform Level 1 and Level 2 commissioning activities specified in this Section, including installation verification, static tests, start-up, component tests, equipment tests, systems tests and intrastation system interface tests.

5. Operate equipment and system during commissioning activities as required by the Testing and Commissioning Manager.

6. Perform and document commissioning tests to verify readiness for commissioning test demonstration. Commissioning tests are specified in this contract.

7. Correct issues and repeat commissioning tests when results do not meet acceptance criteria.

8. Commissioning Test Demonstrations: Follow general requirements for commissioning test demonstrations as stated in the Contract Documents:

    a. Repeat commissioning tests on a sample basis to demonstrate acceptable performance: Level 1 Component, Equipment, and System Commissioning Tests.

    b. Record and submit commissioning test demonstration data and issues.

    c. Correct issues and repeat commissioning test demonstration when results do not meet Acceptance Criteria.

9. Attend commissioning meetings as requested by the Testing and Commissioning Manager.

10. Report any inconsistencies or issues in system operations or performance.

11. Provide personnel to support commissioning test demonstration specified in this contract as requested by the Testing and Commissioning Manager.

12. In the event that a commissioning test demonstration fails, assist in determining the cause of failure. Make corrections as necessary.

13. Cooperate with Testing and Commissioning Manager to make equipment and systems ready for commissioning tests specified in this contract as early in the construction schedule as possible.

B. Cooperate with Testing and Commissioning Manager to accomplish commissioning work on schedule and in coordination with other trades.

C. Do not cover installed Work before the system has been inspected. Uncover covered Work as directed by the Testing and Commissioning Manager for testing.

1.04 QUALITY ASSURANCE

A. Coordinate completion of Install Verification forms, by the Quality Control Inspector, as identified in the Contractors Quality Control Inspection and Test Plan.

PART 2 - PRODUCTS

2.01 TEST EQUIPMENT AND INSTRUMENTS

A. Provide test equipment and instrumentation, including consumable supplies, required to execute commissioning activities. Unless noted otherwise, test equipment and instrumentation remain the property of the Contractor.

B. Provide proprietary test instruments or tools required by the equipment manufacturer. Provide and operate the proprietary test instruments or tools as required for commissioning work.

PART 3 - EXECUTION

3.01 LEVEL 1 COMMISSIONING ACTIVITIES REQUIREMENTS

A. Level 1 commissioning activities scope: Technical requirements for commissioning of Exterior Improvements for irrigation systems are specified in this contract.

B. Provide technicians, instrumentation, and tools to perform commissioning activities in accordance with accepted commissioning activity procedures at the direction of the Testing and Commissioning Manager.

C. Scope of Exterior Improvements commissioning activities applies to all portions of the Exterior Improvements installation described in the test. Where sampling is specified, it applies only to the commissioning test demonstration.

D. Upon approval of product submittals associated with Technical requirements and the scope of Commissioning develop and submit for approval Install Verification Checklist forms for the quality criteria of the Work specified in this contract.

E. Preparation:

1. Certify that Exterior Improvements, subsystems, and equipment have been completed, optimized, and started; and are operating in accordance with Contract Documents.

2. Testing Instrumentation: Install measuring instruments and logging devices to record test data in accordance with accepted commissioning test procedures as directed by the Commissioning Authority.

3. Certify that Exterior Improvements instrumentation and control systems have been completed and calibrated; are operating according to the Contract Documents; and that pretest set points have been recorded.

4. Set systems, subsystems, and equipment into operating mode to be tested (e.g., normal shut down, normal auto position, normal manual position, and alarm conditions) in accordance with accepted commissioning test procedures as directed by the Testing and Commissioning Manager.

F. Test all operating modes, interlocks, control responses, and responses to abnormal or emergency conditions.

G. Perform tests using design conditions whenever possible. If tests cannot be completed because of a deficiency outside the scope of the Equipment system, document the deficiency and report it to Sound Transit. After deficiencies are resolved, reschedule tests.

H. Simulated conditions may need to be imposed using an artificial load when it is not practical to test under design conditions. Provide equipment to simulate loads. Set simulated conditions in accordance with accepted commissioning test procedures as directed by the Testing and Commissioning Manager. Document simulated conditions and methods of simulation. After tests, return settings to normal operating conditions.

I. Request approval to alter set points when simulating conditions is not practical. Request approval to alter sensor values with a signal generator when design or simulating conditions and altering set points are not practical.

J. Where seasonal testing is specified, complete appropriate commissioning tests and documentation within the Construction Period. Schedule and execute seasonal tests when specified conditions are expected.

3.02 LEVEL 1 COMMISSIONING ACTIVITY PROCEDURES

A. Submit level 1 commissioning activity test procedures and data forms for the following types of commissioning activities, requirements for which are specified in this contract.

1. Level 1 commissioning activities:

a. Installation verification.

b. Static tests.

c. Start-up procedures.

d. Component tests.

e. Equipment tests.

f. System tests.

g. *[Review identified IV's, E and S tests and add or modify as necessary based on location design for envelope systems]*

h. Example checklists/test forms can be provided upon requests.

3.03 LEVEL 1 INSTALLATION VERIFICATION CHECKLIST REQUIREMENTS

A. Scope: Installation verification requirements to the following:

1. Planting irrigation as stated in the Contract Documents.

B. Installation verification checklist forms shall include the following:

1. Organized to prompt the installer to check off quality criteria for each discrete portion of the Work.

2. Identify the system or features to which the installation verification checklist applies at the top of the form.

3. Section for verification of delivery of accepted materials.

4. Section for condition of materials at delivery.

5. Section for verification that installation meets contract documentation and any special installation instructions by respective manufacturer.

6. Space at the end of the form for the installer to print their name and company name, fill in the date, and sign or initial.

7. Space at the end of the form for the Quality Control inspector designated for the scope to review and accept installation verification. QC Inspector must perform Install Verification and verify each element identified in form has been reviewed for conformance with contract documents and in accordance with the Contractors Quality Control Inspection and Test Plan as part of Section 01 45 00 - Quality Assurance/Quality Control.

8. Space to identify the area of work for which the installer is executing the Installation Verification Checklist.

9. Description of the quality criteria as it pertains to the specific work. Include a check-box for each criterion.

C. Quality Criteria: Installation verification checklists shall address the following quality criteria:

1. Make and model match accepted submittals.

2. Equipment is installed without visible damage.

3. Location is as indicated on drawings.

4. Equipment is accessible for maintenance using safe work practices.

5. There is sufficient space to remove and replace components intact without demolishing other work.

6. Equipment surfaces are clean and free of dust, dirt, oil and other contaminants.

D. Fill out and sign installation verification checklists for Exterior Improvements while the Work is being installed. The intent is to fill out and sign the installation verification checklist as work proceeds to improve the quality of the installation. Retain completed installation verification checklists on site for review.

E. Before performing a commissioning test, installation verification checklists must be performed and completed by QC inspector designated for the appropriate area specified here in and within the Contractors Quality Control Inspection and Test Plan as part of Section 01 45 00 - Quality Assurance/Quality Control submit completed installation verification checklists for work included in the commissioning test.

3.04 LEVEL 1 INSTALLATION VERIFICATION

A. Installation verification checklists are required for the following, minimum:

1. 3208-IV-01, Planting Irrigation, including:

a. Measurement of static pressure at each point of connection to verify that pressure is adequate for proper sprinkler coverage as shown on the Contract Drawings.

b. Trenches.

c. Backfill.

d. Pipe assembly.

e. Backflow preventer.

f. Valve boxes.

g. Valves, including master control valves, electric remote control valves, and quick couple valves.

h. Sprinkler heads, including spray adjustment.

i. Control wire and wire sleeves.

j. Automatic irrigation controller.

k. Water meters and flow sensors.

l. Pressure reducing valves.

m. Wye strainers.

3.05 LEVEL 1 STATIC TESTS

A. 3208-ST-01: Hydrostatic Pipe Pressure Test:

1. System/Equipment to be Tested:

a. Irrigation piping, as stated in the Contract Documents.

2. Functions to be Tested:

a. Pipe, valve, and fitting leakage.

3. Conditions of the Test:

a. Leave all system joints, connections, and other fittings exposed until after completion and acceptance of pressure test. All subsequent breaches of integrity of the mainline shall require re-testing.

b. Test each system as a unit or in sections; successfully meet specified requirements for each section before acceptance.

c. Center load pipe with small amount of backfill to prevent arching and movement under pressure. Leave joints exposed for inspection during pressure test.

d. Test by capping each outlet and filling pipeline with water. Maintain specified pressure for one hour and determine leakage. Immediately correct leaks and subject system to same test. No pipe, fitting or joint showing leakage will be accepted. After piping has been tested to satisfaction of the Resident Engineer, backfill pipe trenches before adjustment and testing of sprinklers and valves.

e. Furnish necessary force pump and other test equipment.

4. Acceptable Results:

a. Mains and supply lines: One hour at 150 pounds per square inch. Maximum psi loss in one hour shall be 5 psi.

b. Lateral lines: Thirty minutes at 80 psi. Maximum psi loss in 30 minutes shall be 5 psi. Plug or cap all fittings prior to testing.

c. Dripper tubing: Operate dripper tubing at static pressure for visual inspection. Acceptable with no visible leaks at fittings.

B. 2808-ST-02: Conductor Shield and Insulation:

1. Component/Equipment to be Tested:

a. Conductors for field wiring.

2. Function to be verified:

a. Confirm no unintended ground conditions.

b. Measure insulation resistance.

3. Acceptable Results:

a. Conductor exhibits no ground conditions.

b. Minimum insulation resistance between two conductors or between conductors and ground is 10 megohms or greater.

3.06 LEVEL 1 START-UP

A. 3208-SU-01: Automatic Irrigation Controller:

1. System/Equipment to be Tested:

a. Automatic irrigation controller.

2. Functions to be Tested:

a. Start-up, including initial setup and programming.

3. Conditions of the Test:

a. Perform start-up, initial setup and programming per manufacturer's recommendations.

b. Test controller for seven (7) days just before end of establishment period. Operate system automatically in manner indicated.

4. Acceptable Results:

a. Complete start-up and normal operation with issues corrected.

3.07 LEVEL 1 COMPONENT TESTS

A. 3208-C-01: Electric Remote Control Valves:

1. System/Equipment to be Tested:

a. Electric remote control valves.

2. Functions to be Tested:

a. Opening.

b. Closing.

c. Loss of power.

3. Conditions of the Test:

a. Cycle valve open two times.

b. Cycle valve closed two times.

c. Disconnect power from valve while it is open.

4. Acceptable Results:

a. Valve opens fully on command.

b. Valve closes leak-tight upon command.

c. Valve closes leak-tight upon loss of power.

B. 3208-C-02: Master Control Valve:

1. System/Equipment to be Tested:

a. Master control valves.

2. Functions to be Tested:

a. Opening.

b. Closing.

c. Loss of power.

3. Conditions of the Test:

a. Cycle valve open two times.

b. Cycle valve closed two times.

c. Disconnect power from valve while it is closed.

4. Acceptable Results:

a. Valve opens fully on command.

b. Valve closes leak-tight upon command.

c. Valve opens fully upon loss of power.

C. 3208-C-03: Backflow Preventer:

1. System/Equipment to be Tested:

a. Double check valve assembly.

2. Functions to be Tested:

a. Backflow prevention.

3. Conditions of the Test:

a. Inspection and testing before use in accordance with the applicable portions of the Washington Administrative Code and other applicable

regulations as set forth by the Washington State Department of Health and the AHJ.

4. Acceptable Results:

a. Devices are in good operating condition in accordance with irrigation installation as stated in the Contract Documents.

D. 3208-C-04: Flow Sensor:

1. System/Equipment to be Tested:

a. Flow sensors.

2. Functions to be Tested:

a. Calibration of flow signal to automatic irrigation controller and central controller.

b. Peak demand history as reported to automatic irrigation controller and central controller.

c. Usage history as reported to automatic irrigation controller and central controller.

3. Conditions of the Test: During these tests, flow sensor shall be connected to the input terminal of the controller as required for final, permanent installation. If for any reason, the connection of the flow sensor to the controller is opened prior to Functional Completion, this test shall be repeated. Perform tests with flow sensors installed in final, permanent positions:

a. Low Water Flow Rate: For each system open the zone valve with the smallest scheduled flow rate. Measure flow using clamp-on ultrasonic flow meter.

b. High Water Flow Rate: For each system open the zone valve with the largest scheduled flow rate. Measure flow using clamp-on ultrasonic flow meter.

4. Acceptable Results:

a. Low water flow rate indicated by the automatic irrigation controller display and the clamp-on ultrasonic flow meter: within plus or minus 3.0 percent.

b. High water flow rate indicated by the automatic irrigation controller display and the clamp-on ultrasonic flow meter: within plus or minus 3.0 percent.

c. Water peak demand indicated by the automatic irrigation controller display and the clamp-on ultrasonic flow meter: within plus or minus 3.0 percent.

d. Water usage indicated by the automatic irrigation controller display and the clamp-on ultrasonic flow meter: within plus or minus 3.0 percent.

E. 3208-C-05: Water Pressure-Reducing Valves:

1. System/Equipment to be Tested:

a. Water Regulators in planting irrigation systems.

2. Functions to be Tested:

a. Control of outlet pressure under varying flows.

3. Conditions of the Test: During the test, ensure that only test personnel operate water valves in the system:

a. With all valves closed, observe water pressure downstream of regulators.

b. Open zone valve with lowest design flow. Observe water pressure downstream of regulators for one minute.

c. Open sufficient valves to increase flow to approximately 50 percent of design flow. Observe water pressure downstream of regulators for one minute.

d. Continue opening valves to increase flow to approximately 100 percent of design flow. Observe water pressure downstream of regulators for one minute.

4. Acceptable Results:

a. For all conditions, downstream pressure is stable within plus or minus 2 PSI of setpoint (50 PSI initially).

F. 3208-C-06: Water Meter:

1. System/Equipment to be Tested:

a. Water meters in planting irrigation systems.

2. Functions to be Tested:

a. Accurate indication of flow.

3. Conditions of the Test:

a. Low Water Flow Rate: For each system open the zone valve with the smallest scheduled flow rate. Measure flow using clamp-on ultrasonic flow meter.

b. High Water Flow Rate: For each system open the zone valve with the largest scheduled flow rate. Measure flow using clamp-on ultrasonic flow meter.

4. Acceptable Results:

a. Low water flow rate indicated at local display and the clamp-on ultrasonic flow meter: within plus or minus 3.0 percent.

b. High water flow rate indicated at local display and the clamp-on ultrasonic flow meter: within plus or minus 3.0 percent.

3.08 LEVEL 1 EQUIPMENT TESTS

A. 3208-E-01: Automatic Irrigation Controller:

1. System/Equipment to be Tested:

a. Automatic irrigation controller and associated flow sensors.

2. Functions to be Tested:

a. Flow monitoring; underflow and overflow.

3. Conditions of the Test:

a. Create water flow rates capable of triggering underflow alarm.

b. Create water flow rates capable of triggering overflow alarm.

4. Acceptable Results:

a. Underflow status is correctly reported by automatic irrigation controller.

b. Overflow status is correctly reported by automatic irrigation controller.

B. 3208-E-02: Conductor Integrity Supervision:

1. Component/Equipment to be Tested:

a. Field wiring conductors.

2. Function to be verified:

a. Supervision of field wire for over current.

b. Supervision of field wire for short circuit.

c. Supervision of field wire for broken wiring.

d. Supervision of field wire for faulty solenoid.

3. Conditions of the test:

a. Create high current flow on field wires to test for supervision.

b. Create short circuit at field devices to test for supervision.

c. Disconnect field device circuits to test for supervision.

d. Simulate faulty solenoids in accordance with manufacturer's instructions.

4. Acceptable Results:

a. Proper supervision of high current flow in field wires. A trouble signal is sent to the central control computer correctly identifying the trouble circuit.

b. Proper supervision of short circuit in field wires. A trouble signal is sent to the central control computer correctly identifying the trouble circuit.

c. Proper supervision of open circuits in field wires. A trouble signal is sent to the central control computer correctly identifying the trouble circuit.

d. Proper supervision of solenoids. A trouble signal is sent to the central control computer correctly identifying the trouble solenoid.

3.09 LEVEL 1 SYSTEM TESTS

A. 3208-S-01: Sprinkler and Drip Irrigation Coverage:

1. System/Equipment to be Tested:

a. Irrigation sprinkler system, including heads.

b. Dripper tubing and emitters.

2. Functions to be Tested:

a. Coverage.

3. Conditions of the Test:

a. Operate systems using highest number of zones scheduled for concurrent operation.

4. Acceptable Results:

a. Full head to head coverage.

b. No excessive overspray.

c. Complete, overlapping coverage.

d. Proper operation of each emitter.

B. 3208-S-02: Sprinkler and Drip Irrigation Controller Programmed Schedule

1. System/Equipment to be Tested:

a. Irrigation controller automatic watering scheduling of zone valves.

2. Functions to be Tested:

a. Verification of appropriate watering durations for each zone.

b. Verification of automatic watering scheduling for each zone.

c. Verification of automatic schedule modifications based on rain sensor.

3. Conditions of the Test:

a. Operate system based on normal watering time schedules and durations.

b. Simulate an extended rain period at the rain sensor.

4. Acceptable Results:

a. Irrigation controllers opens each zone valve for the correct duration per the normal watering schedule.

b. Based on the rain sensor input, the irrigation controller reduces the duration of the watering schedules appropriate for the system's calculated contribution of rain to the irrigation of the landscaping.

3.10 LEVEL 2 INTRA-STATION SYSTEM TEST INTERFACE TESTING REQUIREMENTS

A. 3208-IS-01: Communication with Central Controller:

1. System/Equipment to be Tested:

a. Automatic irrigation controller and associated radio and antenna (or cellular antenna).

2. Functions to be Tested:

a. Communication with central controller.

3. Conditions of the Test: Coordinate operation of central control systems during this test with the Resident Engineer.

a. Generate alarms and trouble conditions at automatic irrigation controller and verify their successful transmission to central control system.

b. Receive and implement programming and scheduling at automatic irrigation controller from central control system.

c. Record configuration parameters for establishing communication, including IP addresses.

4. Acceptable Results:

a. Alarms and trouble conditions received at central control system.

b. Central control programming and scheduling received and implemented at automatic irrigation controller.

c. Include configuration parameters in test documentation and O & M submittals.

3.11 LEVEL 1 TEST REQUIREMENTS MATRIX

	3208-IV-0X	**3208-ST-0X**	**3208-SU-0X**	**3208-C-0X**	**3208-E-0X**	**3208-S-01**	**3208-S-02**	**3208-S-03**	**3208-IS-01**
Irrigation piping, valves, instrumentation, and accessories	X	X		X		X			
Irrigation controller, wiring and instrumentation.	X	X	X	X	X	X	X	X	X

[DESIGNER: ADD OR MODIFY MATRIX AS NECESSARY BASED ON TESTS ADDED OR MODIFIED ABOVE DEPENDING UPON THE LOCATION DESIGN FOR IRRICATION SYSTEMS. COORDINATE WITH PLANT IRRIGATION SPECIFICATIONS]

END OF SECTION

EXHIBITS (On Proceeding Pages)

1. EXHIBIT A – Sample Test Form

EXHIBIT A – SAMPLE TEST FORM

ST PROJECT CONTRACT ##

First Test	PASS	Test Date: x _____
Repeat Test	FAIL	
Demonstrated Test		

OBJECTIVES:

A. Verify that the drip irrigation coverage is sufficient over the planting areas.

EQUIPMENT TO BE TESTED:

Equipment ID	Description
N/A	Irrigation supply water system drip line systems

REFERENCE DOCUMENTS:

Document
Drawings:
Specification Sections:
Submittals:

TEST PRE-REQUISITES:

Activity	Notes	Completed?	
		Yes	No
3208-IV-01.01 – Planting Irrigation			
3208-ST-03.01 – Conductor Insulation			
3208-SU-01.01 – Irrigation Controller			
3208-C-01.01 – Master Control Valve			
3208-C-02.01 – Remote Control Valves			
3208-C-05.01 – Pressure Regulating Valves			
Notes: (1)			

MINIMUM PARTICIPANTS:

Participant	Notes	Required?	
		Yes	No
Installing contractor			
Sound Transit site quality inspector			
Notes: (1)			

REQUIRED INSTRUMENTATION AND EQUIPMENT:

Instrument or Equipment						Notes	Provided Instrumentation meets Requirements?	
Type or Sensed Parameter	Manufacturer	Model	Range	Accuracy	Calibration Date/ Next Cal. Due		Yes	No
None				±	/			

Notes: (1)

CONDITIONS AT TIME OF TESTING:

AREA OF WORK:

Area in Which Work will be Conducted:
Water supply connection at the south side of the parking garage.
Notes: (1)

ISSUES DISCOVERED AND PROPOSED RESOLUTIONS:

No.	Issue	Proposed Resolution
Notes: (1)		

SIGNATURES:

Company	Printed Name	Signature	Date
Installing Contractor:			
Other Witness:			
ST Witness:			

CONDITIONS OF TEST

A.	Verify that drip irrigation zones setup is complete, including initial programmed schedule, zone control valves, zone pressure regulating valves, drip tubing manual drainers.
B.	Conduct after plants have been placed.
C.	Operate the controller for the drip irrigation zones for at least two weeks.
Notes: (1)	

ACCEPTABLE RESULTS

A.	Drip Irrigation coverage is adequate.
Notes: (1)	

SYSTEM PERFORMANCE TESTING

	Circuit	Visual Inspection of Drip Tube Routing as it Relates to Plantings Indicate Coverage is Adequate for All Plantings	Zone Pressure Regulating Valve is Maintaining the Supply Target Pressure for the Drip Zone	Drip Irrigation Schedule Adequate (Should have wet soil down to approx.. 6" Depth after at Least 2 Weeks Operation	Notes	Pass?		Date
						Yes	No	
Drip Irrigation	Zone 1 drip irrigation coverage							
	Zone 2 drip irrigation coverage							
	Zone 3 drip irrigation coverage							
	Zone 4 drip irrigation coverage							
	Notes: (1)							

END OF SECTION

SECTION 32 11 23

AGGREGATE BASE COURSES

PART 1 - GENERAL

1.01 SUMMARY

A. Section includes:

1. Requirements for furnishing, spreading, and compacting aggregate for base course.

1.02 REFERENCES

A. This Section incorporates by reference the latest revisions of the following documents:

1. Washington State Department of Transportation (WSDOT):

a. Standard Specifications for Road, Bridge, and Municipal Construction.

b. Construction Manual.

2. Authority Having Jurisdiction (AHJ):

a. Standard plans and specifications.

3. ASTM International (ASTM):

a. ASTM D1557 Standard Test Methods for Laboratory Compaction Characteristics of Soil Using Modified Effort.

b. ASTM D6938 Standard Test Method for In-Place Density and Water Content of Soil and Soil-Aggregate by Nuclear Methods

1.03 COORDINATION

A. Contractor must hold a preconstruction meeting to discuss the approved Construction Work Plan (CWP). The CWP must address hold points, schedule of work, related approved submittals.

B. Prior to commencing any work, Contractor must provide minimum of 30 days notice to schedule meeting(s) with Resident Engineer to discuss the work plan and schedule.

C. Contractor must obtain required permit(s) for the work from AHJ.

1.04 SUBMITTALS

A. Submit:

1. Material source, and all tests and certifications necessary to determine compliance with the specifications.

2. Test Reports: Plant and field test reports.

PART 2 - PRODUCTS

2.01 MATERIALS, EQUIPMENT, AND FACILITIES

A. Furnish mineral aggregate type as indicated on the Issued for Construction Drawings. Aggregates must conform to WSDOT Standard Specifications, Section 9-03.

2.02 SOURCE QUALITY CONTROL

A. Select and provide aggregates sources from WSDOT's Aggregates Sources Approval data base. If aggregates are not from an approved source, the Contractor must provide qualifying test data to certify the material is in compliance with specifications prior to its use.

B. Perform sampling and testing of aggregate base material in accordance with WSDOT Standard Specifications, Section 3-04.

PART 3 - EXECUTION

3.01 EXAMINATION

A. Inspect subgrade with the Resident Engineer and obtain a written acceptance of the prepared subgrade, prior to the placement of aggregate base course.

3.02 PREPARATION

A. Perform subgrade preparation as indicated on the Issued for Construction Drawings and specifications.

3.03 CONSTRUCTION

A. Place and compact aggregate base courses as indicated on the Issued for Construction Drawings and in accordance with WSDOT Standard Specifications, Section 4-04.

3.04 FIELD QUALITY CONTROL

A. Test for compliance of compaction and moisture control of aggregate base in accordance with WSDOT Standard Specifications, Section 2-03. When a material source changes, test each material independently.

B. Moisture content must not vary more than 3 percent above or below the optimum moisture content as determined by test method ASTM D1557.

C. Tolerances for maximum allowable deviation in surfacing thickness of Aggregate Base Course must be 1/2 inch less than specified depth.

D. Sampling frequency for density and compaction of aggregate materials must be as follows:

Embankment	:	1-2500 CY
Cut Section	:	1-500 LF
Surfacing and Subballast:	1-1000 LF	
Backfill	:	1-500 CY

END OF SECTION

SECTION 32 12 16

ASPHALT PAVING

PART 1 - GENERAL

1.01 SUMMARY

A. Section includes:

1. Requirements for furnishing and placement of Hot Mix Asphalt (HMA) on a prepared base, for roadways, sidewalks, and surface parking facilities.

1.02 REFERENCES

A. This Section incorporates by reference the latest revisions of the following documents:

1. Washington State Department of Transportation (WSDOT):

a. WSDOT Standard Specifications for Road, Bridge, and Municipal Construction.

b. Construction Manual.

2. Authority Having Jurisdiction (AHJ):

a. Standard plans and specifications.

B. Definitions:

1. Hot Mix Asphalt (HMA): A plant-mixed asphalt concrete pavement composed of asphalt binder and mineral aggregate as specified, mixed in specified proportions at a predetermined temperature to provide a homogenous, stable, workable, and compactable mixture.

1.03 COORDINATION

A. Contractor must hold a Preconstruction meeting to discuss the approved Construction Work Plan (CWP). The CWP must address hold points, schedule of work, related approved submittals.

B. Prior to commencing any work, Contractor must provide minimum of 30 days notice to schedule meeting(s) with Resident Engineer to discuss the work plan and schedule.

C. Contractor must obtain required permit(s) for the work from AHJ.

1.04 SUBMITTALS

A. Submit:

1. Mix Design, as specified in WSDOT Standard Specifications, Section 5-04, and test results (material sources, gradation, classification, and plant certification) in support of each mix design.

2. Paving plan for areas under traffic, as specified in WSDOT Standard Specifications, Section 5-04.

3. Test reports of sampling and testing, and inspection records to the Resident Engineer within 24 hours of HMA placement.

B. Transmit:

1. Associated Field and Lab Test Reports.

2. Material Certificates.

3. Qualifications Statements for the crew participating in the Construction Process.

PART 2 - PRODUCTS

2.01 MATERIALS

A. Contractor to show maximum nominal aggregate size on the Issued for Construction Drawings. Aggregates for HMA must conform to WSDOT Standard Specifications, Section 9-03.8 or AHJ requirements.

B. Asphalt binder grade must be as shown on the Issued For Construction Drawings, in accordance with WSDOT Standard Specifications, Section 9-02.1(4).

C. Tack coat shall be CSS-1 or CSS-1h emulsified asphalt, in accordance with WSDOT Standard Specifications, Section 9-02.1(6).

D. Anti-stripping additive shall conform to WSDOT Standard Specifications, Section 9-02.4.

E. Temporary HMA must comply with WSDOT Standard Specifications, Section 5-04.

2.02 MIXES

A. Asphalt binder: Performance Grade as shown on the issued for Constrcution Drawings and in accordance with WSDOT Standard Specifications Section 9-02.1(4).

2.03 SOURCE QUALITY CONTROL

A. Contractor must test the Aggregates proposed to be used for HMA, in accordance with WSDOT Standard Specifications, Section 9-03.8.

B. Perform acceptance sampling and testing of HMA in accordance with WSDOT Standard Specifications and Construction Manual.

PART 3 - EXECUTION

3.01 PREPARATION

A. Prepare subgrade and construct aggregate base course as indicated on the Issued for Construction Drawings, and in accordance with Aggregate Base Courses Specifications.

B. Surface Preparation of Existing Pavements:

1. When an existing paved surface will be used as a base for one or more courses of HMA, begin by cleaning the entire existing pavement surface.

2. Remove all fatty asphalt patches, grease drippings and other objectionable matter from the existing pavement. Sweep existing pavement with a power broom until clean of dust, soil, pavement grindings, and other foreign matter. Fill all holes and small depressions with HMA. Level and compact any patched areas.

3. Apply tack coat to all paved surfaces on which any course of HMA shall be placed or abutted, in accordance with WSDOT Standard Specifications Section 5-04.

C. Surface Preparation of Aggregate Bases or Native Subgrade must be per WSDOT Standard Specifications

3.02 CONSTRUCTION

A. Provide, place, and compact asphalt pavement true to line, joint, grade, thickness, and typical cross-section indicated on the Contract Drawings, and in accordance with WSDOT Standard Specifications, Section 5-04.

B. For asphalt pavement patching within the AHJ's right-of-way, construction must comply with AHJ pavement restoration requirements.

C. Temporary HMA, where required, Contractor must design pavement section with a minimum thickness of 3 inches.

D. For Joint Sealant at Barrier where required by the Contract, place sealant between barrier face and pavement per WSDOT Standard Specifications 5-04.3(4)

3.03 FIELD QUALITY CONTROL

A. Perform compaction test and surface smoothness test for asphalt pavement, as in accordance with WSDOT Standard Specification, Section 5-04. Include asphalt thickness for each compaction report.

B. Allow newly constructed asphalt pavement to cool to ambient temperature before opening pavement to traffic.

C. Verify WSDOT Standard Specification, Section 5-04.3(13) Surface Smoothness has been met, apply fog seal to pavement surface, and obtain approval from the Resident Engineer, before opening pavement to traffic.

D. Maintain finished pavement in finished clean condition until the work is accepted by the Resident Engineer.

END OF SECTION

SECTION 32 12 83

DECOMPOSED GRANITE PAVEMENT

PART 1 - GENERAL

1.01 SUMMARY

A. Section includes:

1. Requirements for materials and installation of Decomposed Granite (DG) Pavement for pathways and vehicular access areas.

1.02 REFERENCES

A. This Section incorporates by reference the latest revisions of the following documents:

1. American Society for Testing and Materials International (ASTM):

a. ASTM C131, Standard Test Method for Resistance to Degradation of Small-Size Coarse Aggregate by Abrasion and Impact in the Los Angeles Machine.

b. ASTM C136, Method for Sieve Analysis for Fine and Coarse Aggregate.

c. ASTM D448, Standard Classification for Sizes of Aggregate for Road and Bridge Construction.

d. ASTM D698, Standard Test Methods for Laboratory Compaction Characteristics of Soil Using Standard Effort.

e. ASTM D1557, Standard Test Methods for Laboratory Compaction Characteristics of Soil Using Modified Effort.

f. ASTM D1883, Standard Test Method for CBR (California Bearing Ratio) of Laboratory-Compacted Soils.

g. ASTM D4254, Standard Test Methods for Minimum Index Density and Unit Weight of Soils and Calculation of Relative Density.

2. Authority Having Jurisdiction (AHJ):

a. Standard plans and specifications.

B. Definitions:

1. Decomposed Granite (DG) Pavement: Stabilized DG pavement to be utilized in pathways, fire lanes, driveways, and parking areas requiring a soft surface material.

1.03 COORDINATION

A. Contractor must hold a Preconstruction meeting to discuss the approved Construction Work Plan (CWP). The CWP must address hold points, schedule of work, related approved submittals.

B. Prior to commencing any work, Contractor must provide minimum of 30 days' notice to schedule meeting(s) with Resident Engineer to discuss the work plan and schedule.

C. Contractor must obtain required permit(s) for the work from AHJ.

1.04 SUBMITTALS

A. Submit:

1. Product Data: Manufacturer's published literature for Decomposed Granite and each product specified.

2. Samples:

a. Decomposed Granite: Two 1-pound bags in specified size, color, and texture showing conformance to selection and specified requirements.

b. Stabilizer: Two 1/2-pound bags.

c. Products Data: For each product specified. Submit a 5-pound sample and sieve analysis for grading of decomposed granite or crushed 3/8 inch or 1/4 inch minus aggregate to be sent to Stabilizer Solutions, Inc. prior to any construction – (allow 2 week turn-around). Must be approved by Resident Engineer.

3. Shop Drawings: Show details of installation, including plans and sections.

B. Transmit:

1. Test Reports / Inspection Reports.

2. Qualifications: Installer and fabricator.

3. Certification: Written statement signed by Installer's Representative and Contractor that Decomposed Granite, binder, and other accessories have been provided as specified, or where different, as accepted by Resident Engineer.

4. Maintenance Stock:

a. Submit maintenance stock to Resident Engineer. Obtain signed receipt.

b. DG Pavement: Minimum 1 percent of each size and color, palletized or contained in protective containers, clean, and labeled as to manufacturer and product.

5. Warranties: Contractor shall provide warranty for performance of product. Contractor shall warranty installation of product for the time of one year from completion.

6. Maintenance Instructions: Copies of manufacturer's maintenance instructions.

1.05 QUALITY ASSURANCE

A. Source Quality Control:

1. Obtain stone from single quarry for Decomposed Granite (DG) as specified by this Section and as accepted by Resident Engineer.

B. Installation: Performed only by skilled Contractors with satisfactory record of performance on landscaping or paving projects of comparable size and quality.

1. Installer to provide evidence to indicate successful experience in providing decomposed granite or crushed 3/8 inch or 1/4 inch minus aggregate paving containing Stabilizer binder additive or ability to follow installation instructions.

C. Mock-up:

1. Construct approximately 100 square foot mock-up of DG Pavement illustrating complete system including one Metal Tree Grate.

2. Include setting method and paving.

3. Verify that binder sealers, cleaners, and other treatments will not change color or physical characteristics of Decomposed Granite.

4. Maintain approved mockups during construction in an undisturbed condition as a reference for comparison to the completed pavement. Protect accepted mock-ups as standard of quality for work of this Section throughout duration of construction.

D. Pre-installation Conference:

1. Attendance: Resident Engineer, installer, distributor's representative, and those requested to attend.

2. Meeting Time: Minimum 1 week prior to beginning work of related Sections affecting work of this Section.

3. Location: Project Site.

1.06 PROJECT CONDITIONS

A. Review installation procedures and coordinate DG Pavement work with other work affected.

B. Complete all hard surface paving adjacent to DG Pavement areas, including concrete walks and asphalt paving prior to installation of DG Pavement.

C. Cold weather:

1. Do not use frozen materials, or materials mixed or coated with ice or frost.

2. Do not build on frozen work or wet, saturated or muddy subgrade.

D. Protect partially completed DG Pavement against damage from other construction traffic when work is in progress. Provide access to emergency and fire equipment to any barricades constructed during and after installation.

E. Protect adjacent work from damage during DG Pavement installation.

1.07 DELIVERY AND STORAGE OF MATERIALS

A. Packaged Materials: Deliver packaged materials in clearly marked containers showing net weight, guaranteed analysis and name of manufacturer. Specified requirements for packaged materials apply to bulk shipments. Protect materials from deterioration during delivery and during storage at site.

PART 2 - PRODUCTS

2.01 LEED COMPLIANCE

A. LEED Submittals:

1. Credit MR 4 – Recycled Content: Attach product data and certification letter indicating percentages by weight of post-consumer and pre-consumer recycled content for products having recycled content. Include statement indicating costs for each product having recycled content.

2. Credit MR 5 – Regional Materials: Attach product data for regional materials indicating location and distance from Project of material manufacturer and point of extraction, harvest, or recovery for each raw material. Include statement indicating cost for each regional material and the fraction by weight that is considered regional.

3. Credit MR 6 – Rapidly Renewable Materials: Attach product data and certification letter indicating percentages by weight of rapidly renewable materials for each product. Include statement indicating costs for each product having rapidly renewable material.

2.02 PERFORMANCE REQUIREMENTS

A. Perform gradation of decomposed granite material or 3/8 inch or 1/4 inch minus crushed aggregate in accordance with ASTM C136 – Method for Sieve Analysis for Fine and Course.

2.03 AVAILABILITY

A. Stabilizer for crushed stone surfaces provided by the following manufacturer:

1. Stabilizer Solutions, Inc. 33 South 28th St., Phoenix, AZ 85034; phone (602) 225-5900, (800) 336-2468; fax (602) 225-5902; website stabilizersolutions.com; email info@stabilizersolutions.com.

2. Or approved equal.

B. Decomposed Granite to be provided by one of the following manufacturers:

1. Lakeview Quarry SE, 525 S. Front Street, Seattle, WA 98108

2. Manufacturers Minerals, Renton, WA

3. Or approved equal.

2.04 MATERIALS

A. Decomposed Granite or 3/8 inch or 1/4-inch crushed aggregate screenings:

1. Crushed Stone Sieve Analysis Percentage of Weight Passing a Square Mesh Sieve AASHTO T11-82 and T27-82.

2. 1/4-inch MINUS AGGREGATE GRADATION

U.S. Sieve No.	Percent Passing by Weight
# 3/8 inch	100
# 4	90 – 100
# 8	75 – 80
# 16	55 – 65
# 30	40 – 50
# 50	25 – 35
# 100	15 – 20
# 200 to	10 – 15

3. Acceptable local supplier list to be provided by Resident Engineer.

B. Stabilized Binder:

1. Stabilized Binder: StaLok W/A.

2. Or approved equal.

C. Base Course: As required by the Contract.

2.05 EXCESS MATERIALS

A. Provide Resident Engineer with the following excess materials for use in future decomposed granite or 3/8 inch or 1/4 inch minus crushed aggregate paving repair: Five 40-to-50-pound bags of the aggregate paving blended with proper amount of Stabilizer.

PART 3 - EXECUTION

3.01 INSPECTION

A. Resident Engineer to examine subgrade and base course installed conditions for improperly compacted trenches, debris, and improper gradients. Do not start DG Pavement installation until unsatisfactory conditions are corrected.

B. Installation constitutes acceptance of existing conditions and responsibility for satisfactory performance. If existing conditions are found unsatisfactory, contact Resident Engineer for resolution.

3.02 PREPARATION

A. Place base course material over prepared subbase to grades shown on the issued for Construction Drawings, in lifts not to exceed 6 inches, compacting each lift separately to 95 percent Modified Proctor.

3.03 INSTALLATION

A. Conform to manufacturer's instructions and provisions as required by the Contract.

3.04 INSTALLATION TOLERANCES

A. Variation in Surface Plane: Maximum1/8 inch in 10-foot, 1/4 inch in 20 feet, and 3/8-inch total.

B. Variation in Alignment of Adjacent Paving Surfaces: Maximum 1/16-inch difference.

3.05 ADJUSTING

A. Repair or replace work not conforming to mock-up and other provisions as required by the Contract.

3.06 PROTECTION

A. DG Pavement must be protected from all vehicle and foot traffic during installation and the drying period.

3.07 CLEANING

A. Remove and replace segments of DG Pavement where damaged, reinstalling as specified, so no evidence of replacement is apparent.

B. Perform cleaning during the installation of work and upon completion of the work. Remove all excess materials, debris, and equipment from site. Repair any damage to adjacent materials and surfaces resulting from installation of this work.

3.08 BLENDING STABILIZER

A. Blending:

1. Call manufacturer for exact blend of Stabilizer and DG. Blend approximately 12 to 16 pounds (call manufacturer for exact blend) of Stabilizer per 1 ton of decomposed granite or crushed 3/8 inch or 1/4 inch minus aggregate screenings. It is critical that Stabilizer be thoroughly and uniformly mixed throughout decomposed granite or crushed 1/4 inch or 3/8 inch minus aggregate screenings. Bucket blending is not acceptable. Blending with a rake and/ or shovel is not acceptable. Blend material dry as water will make the material hard.

B. Placement:

1. After pre-blending, place the Stabilized decomposed aggregate or 3/8 inch or 1/4-inch crushed aggregate screenings on prepared sub-grade. Level to desired grade and cross section.

2. Depth of pathways: 3 inches for heavy foot traffic and light vehicles.

3.09 WATERING

A. Water heavily for full-depth moisture penetration of the Stabilized pathway profile. Water activates Stabilizer. To achieve saturation of Stabilized pathway profile, apply 25 to 45 gallons of water per 1 ton. During water application randomly test for depth using a probing device, which reaches full depth.

3.10 COMPACTION

A. Upon thorough moisture penetration, compact aggregate screenings to 85 percent relative compaction by equipment such as a 2-to-4-ton double drum roller or a 1,000-pound single drum roller. The roller size will depend on the depth of the DG Pavement. Do not use a vibratory plate compactor. Do not begin compaction for 6 hours after placement and up to 48 hours.

B. Take care in compacting decomposed granite or crushed 3/8 inch or 1/4 inch minus aggregate screenings when adjacent to planting and irrigation systems. Usehand tamping with 8 inches or 10 inches.

3.11 INSPECTION

A. Finished surface of DG Pavement shall be smooth, uniform and solid. There must be no evidence of cracking. Cured and compacted pavement must be firm throughout profile

with no spongy areas. Loose material must not be present on the surface after installation but may appear after use and according to environmental conditions.

B. Pavement must remain stable underneath the loose granite on top. It is a “natural” looking pavement, yet stable throughout. Repair any irregularities in pavement surface to the uniformity of entire installation.

3.12 MAINTENANCE

A. Remove debris, such as paper, grass clippings, leaves or other organic material by mechanically blowing or hand raking the surface as needed. Any plowing program required during winter months shall involve the use of a rubber baffle on the plow blade or wheels on the plow that lifts the blade 1/4 inch off the paving surface.

B. During the first year, a minor amount of loose aggregate will appear on the paving surface (1/16 inch to 1/4 inch). If this material exceeds a 1/4 inch, redistribute the material over the entire surface. Water thoroughly to the depth of 1 inch. Compact with power roller of no less than 1000 pounds. Repeat this process as needed.

END OF SECTION

SECTION 32 13 13

CONCRETE PAVING

PART 1 - GENERAL

1.01 SUMMARY

A. Section includes:

1. Requirements for furnishing and placement of cement concrete pavement for roadways, sidewalks, and curb ramps.

1.02 REFERENCES

A. This Section incorporates by reference the latest revisions of the following documents:

1. ASTM International (ASTM):

a. ASTM A615/A615M Standard Specification for Deformed and Plain Carbon-Steel Bars for Concrete Reinforcement.

b. ASTM C143/C143M Standard Test Method for Slump of Hydraulic Cement Concrete.

c. ASTM C150/C150M Standard Specification for Portland Cement.

d. ASTM C881/C881M Standard Specification for Epoxy Resin Base Bonding Systems for Concrete.

2. Washington State Department of Transportation (WSDOT):

a. Standard Plans and Standard Specifications for Road, Bridge, and Municipal Construction.

b. Standard Plans.

3. Authority Having Jurisdiction (AHJ):

a. Standard plans and specifications.

4. Public Right of Way Accessibility Guidelines (PROWAG).

5. ADA Accessibility Guidelines (ADAAG).

1.03 COORDINATION

A. Contractor must hold a Preconstruction meeting to discuss the approved Construction Work Plan (CWP). The CWP must address hold points, schedule of work, related approved submittals.

B. Prior to commencing any work, Contractor must provide minimum of 30 days notice to schedule meeting(s) with Resident Engineer to discuss the work plan and schedule.

C. Contractor must obtain required permit(s) for the work from AHJ.

1.04 SUBMITTALS

A. Submit:

1. Product Data: Submit manufacturers' product data for proposed concrete admixtures.

2. Concrete Pavement Mix Designs: Submit mix designs as specified in WSDOT Standard Specifications Section 5-05. Include Manufacturer's Certificate of Compliance indicating the batch weights and gradation reports of course and fine aggregates. Submit mix design to the Resident Engineer and include mix proportions per cubic yard, proposed sources, volume of entrained air, average 28-day Compressive Strength, water cement ratio, fineness modulus, and aggregate proportions.

3. Concrete Sidewalks and Ramps: Submit acceptance as specified in WSDOT Standard Specifications Section 6-02. Include Manufacturer's Certificate of Compliance indicating the batch weights and gradation reports of course and fine aggregates. Submit mix design to the Resident Engineer and include mix proportions per cubic yard, proposed sources, volume of entrained air, average 28-day Compressive Strength, water cement ratio, fineness modulus, and aggregate proportions.

4. Curing Materials: Submit curing materials as required by the Contract.

5. Exposed aggregate concrete samples: 10 pound sample of exposed aggregate, Information from aggregate supplier indicating source, type, color, and gradation must accompany sample.

6. Shop Drawings:

   a. Submit drawings showing the locations of all joints in concrete, including construction joints, expansion joints, isolation joints, and contraction joints.

   b. Submit drawings indicating concrete placement method, sequence, location, and boundaries. Include each type and class of concrete, and quantity in cubic yards.

7. Detectable warning pattern for curb ramps: Submit the information required in WSDOT Standard Specifications Section 8-14.3(5) and AHJ requirements to the Resident Engineer at least five (5) working days in advance of placement.

8. ADA Inspection Form, WSDOT Form 224-020.

B. Transmit:

1. Test Reports

2. Inspection Reports.

1.05 EXPOSED AGGREGATE CONCRETE QUALITY ASSURANCE

A. Installer Qualifications: Experienced installer who has constructed exposed aggregate concrete finishes, as specified within, and whose project experience in the past 5 years includes successful completion of exposed aggregate concrete construction.

B. Mockups: Cast mockups of full size sections of exposed aggregate concrete pavement to demonstrate typical surface finish, texture, color and standard workmanship.

1. Construct a 4 feet x 4 feet mockup on site at location separate from actual placement.

2. Notify Resident Engineer a minimum of 7 days in advance of date and time when mockup will be constructed. This notification is to include locations(s), pavement section dimensioning, and work plan for mockup construction.

3. Obtain approval in writing from the Resident Engineer before commencing mockup work.

4. Obtain approval of the mockup work, in writing, from the Resident Engineer, prior to commencing actual site concrete work.

5. Maintain approved mockups during construction in an undisturbed condition as a reference for comparison to the completed pavement. Exposed aggregate concrete final acceptance is provided by the Resident Engineer.

6. Demolish and remove approved mockup from the site when directed by the Resident Engineer.

PART 2 - PRODUCTS

2.01 MATERIALS

A. Materials for construction of concrete pavement for roadways, sidewalks and curb ramps must include cement, aggregates, reinforcing steel, curing compounds, and admixtures, as specified in WSDOT Standard Specifications and AHJ requirements.

B. Detectable warning surface must conform to WSDOT Standard Specification Section 8-14.2 and AHJ requirements.

2.02 SOURCE QUALITY CONTROL

A. Verify and test materials proposed to be used for construction in accordance with WSDOT Standard Specification and AHJ requirements.

PART 3 - EXECUTION

3.01 PREPARATION

A. Prepare subgrade as required by the Contract.

B. Construct aggregate base course as indicated on the issued for Construction Drawings and as required by the Contract.

3.02 CONSTRUCTION

A. Construct concrete pavement true to line, grade, thickness, and typical cross-section indicated on the issued for Construction Drawings, in accordance with WSDOT Standard Specifications Section 5-05 and AHJ requirements. Remove and replace pavement that is not within tolerances for line, grade, thickness and cross-section.

B. Construct concrete driveways, as indicated on the issued for Construction Drawings, in accordance with WSDOT Standard Specifications Section 8-06 and AHJ requirements.

C. Construct concrete sidewalks and curb ramps, as indicated on the issued for Construction Drawings, in accordance with WSDOT Standard Specifications, Section 8-14, WSDOT Standard Plans and AHJ requirements.

D. Construct concrete paving for roadways, in accordance with WSDOT Standard Specifications, Section 5-05.3 and AHJ requirements. For pavement and sidewalks concrete paving within the AHJ right-of-way, construction must comply with AHJ pavement restoration requirements.

3.03 FIELD QUALITY CONTROL

A. Perform acceptance testing of concrete pavement, in accordance with WSDOT Standard Specification, Section 5-05 and AHJ requirements.

B. Verify WSDOT Standard Specification, Section 5-05.3(17) has been met, and obtain approval from the Resident Engineer, before opening newly constructed pavement to traffic.

C. Contractor is responsible for concrete placeability, workability, and strength.

3.04 CLOSOUT ACTIVITIES

A. Complete measurements to verify all ADA features comply with the Contract. Complete ADA inspection forms along with as-built measurements and transmit to the Resident Engineer.

B. In the instance where an ADA feature does not meet accessibility requirements, all work to replace non-compliant work and then to measure, record the as-built measurements, and transmit electronic forms to the Resident Engineer must be performed at no additional cost to Sound Transit.

END OF SECTION

SECTION 32 13 43

PERVIOUS CONCRETE PAVING

PART 1 - GENERAL

1.01 SUMMARY

A. Section includes:

1. Requirements for work consisting of constructing pervious concrete paving including mix design, excavation, subgrade preparation, separation geotextile, and aggregate discharge subbase or permeable ballast. The pavement section including subbase materials must allow surface water to permeate through the pervious surface into the supporting materials to allow infiltration or detention of surface waters.

1.02 REFERENCES

A. This Section incorporates by reference the latest revisions of the following documents.

1. Authority Having Jurisdiction (AHJ):

a. Standard plans and specifications.

2. ASTM International (ASTM):

a. ASTM C1688/C1688M Standard Test Method for Density and Void Content of Freshly Mixed Pervious Concrete.

B. Definitions:

1. Pervious Concrete: High porosity concrete that allows water to pass directly through, thereby reducing runoff from the site and allowing groundwater recharge.

1.03 COORDINATION

A. Contractor must hold a Preconstruction meeting to discuss the approved Construction Work Plan (CWP). The CWP must address hold points, schedule of work, related approved submittals.

B. Prior to commencing any work, Contractor must provide minimum of 30 days' notice to schedule meeting(s) with Resident Engineer to discuss the work plan and schedule.

C. Contractor must obtain required permit(s) for the work from AHJ.

1.04 SUBMITTALS

A. Submit:

1. Contractor must submit the following items for review and approval prior to placing any pervious concrete pavement in accordance with AHJ Standard Specifications:

a. The source of all materials proposed for use in constructing pervious concrete pavement.

b. Batch weights for all constituents of 1 cubic yard of the proposed pervious concrete mix.

c. The specific gravity (SSD) of all aggregates to be used in the proposed pervious concrete mix.

d. The proposed gradation of coarse aggregates used in pervious concrete.

e. The designed volume in cubic feet of all proposed components for 1 cubic yard of the proposed pervious concrete mix.

f. The design water/cement ratio of the proposed mix design.

g. The fresh density of the proposed pervious concrete mixture as determined by ASTM C1688/C1688M.

h. The proposed gradation of aggregates to be used in the discharge subbase gravel.

i. Catalogue cuts and certificates of compliance for all proposed admixtures and synthetic fibers (if used).

j. Catalogue cuts and certificates of compliance for separation geotextiles.

k. Mill certification of the Portland cement and pozzolans, if used, for the current lot to be used in the production of the proposed pervious concrete mix. The Contractor must maintain this submittal throughout the duration of the project as lots change.

l. Current certifications by the National Ready Mix Concrete Association (NRMCA) for the batch plants to be used in the production of pervious concrete.

m. Current certifications by the NRMCA for the trucks to be used in transporting pervious concrete from the batch plant to the point of placement.

n. Qualification documentation for current certifications by the NRMCA for the Contractor's personnel who will be installing pervious concrete. Valid acceptable documentation is the NRMCA issued wallet card or certification certificate.

o. At the time of delivery of the material to the Project Site, the Contractor must provide an original certificate of compliance for each truckload of pervious concrete. If the certificate of compliance from the concrete producer is not provided to the Resident Engineer upon delivery, the truckload must not be placed.

1.05 QUALITY ASSURANCE

A. Contractor Qualifications:

1. In accordance with AHJ Standard Specifications:

a. Employ no less than one (1) NRMCA certified Pervious Concrete Craftsman on site, overseeing each placement crew during all pervious concrete placement, or employ no less than three (3) NRMCA certified Pervious Concrete Installers, who will need to be on site working as members of each placement crew during all pervious concrete placement, or employ no less than three (3) NRMCA certified Pervious Concrete Technicians and one (1) Pervious Concrete Installer, who will need to be on site working as members

of each placement crew during all concrete placement, unless otherwise specified. For those crews having personnel with NRMCA certified Pervious Concrete Technician certifications, the placement crew must also successfully pass a Performance Evaluation required under NRMCA Pervious Concrete Installer certification.

b. If, in the opinion of the Resident Engineer, personnel used for installing pervious concrete pavement are unqualified, inattentive to quality, or unsafe, they will be removed or reassigned from installation of pervious concrete pavement at the written request of the Resident Engineer.

B. Test Panel:

1. In accordance with AHJ Standard Specifications.

PART 2 - PRODUCTS

2.01 MATERIALS

A. The materials used in the Work include Portland cement and blended hydraulic cement, aggregate for Portland cement concrete, permeable ballast, aggregate discharge subbase, premolded joint filler for isolation joints, concrete curing materials, pozzolans, and admixtures, water and separation geotextiles in accordance with AHJ Standard Specifications.

B. Sand Media:

1. Aggregate discharge subbases are replaced with sand media. Aggregate for the sand media must consist of granular material, free from wood, bark or other extraneous material and must be graded to meet the following requirements as expressed as percentages by weight:

Sieve Size	Percent Passing
US No. 4	95-100
US No. 4	95-100
US No. 8	70-100
US No. 16	40-90
US No. 30	25-75
US No. 8	70-100
US No. 16	40-90
US No. 50	2-25
US No. 100	0-4
US No. 200	0-2

2.02 MIX DESIGN CRITERIA AND PROCEDURES

A. In accordance with AHJ Standard Specifications.

PART 3 - EXECUTION

3.01 CONSTRUCTION

A. Construct Portland cement pervious concrete pavement in accordance with the lines, grades, thicknesses, and typical cross-sections indicated on the issued for Construction Drawings and in accordance with the construction requirements of AHJ Standard Specifications.

END OF SECTION

SECTION 32 14 13

PRECAST CONCRETE UNIT PAVING

PART 1 - GENERAL

1.01 SUMMARY

A. Section includes:

1. Requirements for the following:

a. Removing and storing existing unit paving for reuse.

b. Installing new and salvaged Unit Pavers.

1.02 REFERENCES

A. This Section incorporates by reference the latest revisions of the following documents.

1. American Society for Testing and Materials International (ASTM):

a. ASTM C33/C33M, Standard Specification for Concrete Aggregates.

b. ASTM C67, Standard Test Methods for Sampling and Testing Brick and Structural Clay Tile.

c. ASTM C140, Standard Test Methods for Sampling and Testing Concrete Masonry Units and Related Units.

d. ASTM C144, Standard Specification for Aggregate for Masonry Mortar.

e. ASTM C936/C936M, Standard Specification for Solid Concrete .Interlocking Paving Units

2. Authority Having Jurisdiction (AHJ):

a. Standard plans and specifications.

3. American Concrete Institute (ACI):

a. ACI 117-10: Specification for Tolerances for Concrete Construction and Materials.

4. Washington State Department of Transportation (WSDOT):

a. Standard Specifications for Road, Bridge, and Municipal Construction.

1.03 COORDINATION

A. Contractor must hold a reconstruction meeting to discuss the approved Construction Work Plan (CWP). The CWP must address hold points, schedule of work, related approved submittals.

B. Prior to commencing any work, Contractor must provide minimum of 30 days' notice to schedule meeting(s) with Resident Engineer to discuss the work plan and schedule.

C. Contractor must obtain required permit(s) for the work from AHJ.

1.04 SUBMITTALS

A. Submit:

1. Layout Drawings: Submit layout drawings showing typical installation of pavers, including layout dimensions, field cutting and coordination of pavers with below grade vaults and utility lids.

2. Product data for the following products:

a. Precast Concrete Unit Pavers.

3. Samples:

a. Precast Pavers: Submit three full size units of each precast concrete paver indicated in sets for each color, texture and pattern specified, showing full range of variations expected in these characteristics.

4. Qualification data for firms and persons specified in Quality Assurance Article to demonstrate their capabilities and experience. Include list of completed projects with project names, addresses, names of architects and owners, plus other information specified in the Contract.

B. Transmit:

1. Extra Stock: Furnish extra stock of quantity equal to 0.5 percent of amount installed, in full-size units, for each type, color, size and finish of tile to location specified by Resident Engineer.

1.05 QUALITY ASSURANCE

A. Manufacturers Qualifications: Minimum of five (5) years of experience in the manufacturing of precast concrete units of quality specified.

B. Installer Qualifications: Engage an experienced installer who has successfully completed unit paver installations similar in material, design, and extent to that indicated for the Contract.

C. Single Source Responsibility: Obtain each color, type and variety of unit pavers from a single source with resources to provide products and materials of consistent quality in appearance and physical properties without delaying progress of the work.

D. Tolerance: Fabrication Tolerances: Variations no more than plus or minus 1/16 inch in width, height, length, thickness, concave or convex deflection.

E. Acceptability of Appearance: The following finish defects are unacceptable. Replace these defects with a new unit at no additional cost to Sound Transit:

1. Pavers not being within the approved color range.

2. Non-uniformity of surface texture.

3. Foreign material embedded in the face.

4. Shrinkage cracks.

5. Ragged or irregular edges. Minor defects incidental to the usual method of manufacturer or slight chipping resulting from handling and delivery may be

acceptable to the Resident Engineer provided such defects are minor in scope and do not affect the overall quality and appearance of the work.

1.06 DELIVERY, STORAGE AND HANDLING

A. Deliver precast pavers on wood pallets, covered with non-staining waterproof membrane; allow air to circulate around precast units.

B. Handle precast units to prevent chipping, breakage, soiling or other damage. Do not use pinch or wrecking bars without protecting edges of precast units with wood or other rigid materials. Lift with wide-belt type slings wherever possible; do not use wire ropes or ropes containing tar or other substances that might cause staining. If required, use wood rollers and provide cushion at end or wood slides.

1.07 PROJECT CONDITIONS

A. Prior to commencing work on the site, record existing conditions of the unit paver areas via a video or picture record. Include any areas of pavers that may be driven on by construction equipment and areas where utility trenching will occur.

B. Review installation procedures, and coordinate with other work, and others whose work will be affected by the precast units' work.

C. Cold Weather Protection: Do not use frozen materials or materials mixed or coated with ice or frost. Do not build on frozen subgrade or setting beds. Remove and replace unit paver work damaged by frost or freezing.

PART 2 - PRODUCTS

2.01 MATERIALS

A. Bedding Sand: gradation conforming to ASTM C33/C33M and the following gradation:

NOTE: Do not use Mason sand.

	ASTM C33 Bedding Sand
Sieve Size	**Percent Passing**
3/8 in.	100
No. 4	95 to 100
No. 8	85 to 100
No. 16	50 to 85
No. 30	25 to 60
No. 50	10 to 30
No. 100	2 to 10
No. 200	0 to 1

B. Joint filling Sand: Mason Sand conforming to ASTM C144 and the following gradation:

	ASTM C144 Natural Sand	ASTM C144 Manufactured Sand
Sieve Size	**Percent Passing**	**Percent Passing**
No. 4	100	100
No. 8	95 to 100	95 to 100
No. 16	70 to 100	70 to 100
No. 30	40 to 75	40 to 100
No. 50	10 to 35	20 to 40
No. 100	2 to 15	10 to 25
No. 200	0 to 5	0 to 10

C. Precast Concrete Pavers

1. Type and Manufacturer: Match existing pavers in the area of work for dimensions and color:

   a. Color: Match color to existing pavers.

   b. Dimensions: Match existing dimensions of 4-1/2 inch by 9 inch by 3-1/8 inch for UNI-Décor® style units.

2. Physical Properties:

   a. General: Meet the requirements of ASTM C936/C936M.

   b. Compressive Strength: Minimum 7,000 pounds per square inch (psi) at 28 days when tested in accordance with ASTM C140.

   c. Water Absorption: Maximum of 5 percent when tested in accordance with ASTM C140.

   d. Freeze/Thaw: Ensure pavers meet the freeze/thaw tests in accordance with Section 8 of ASTM C67. Ensure specimens when tested have no breakage and not greater than 1 percent loss in dry weight of any individual unit when subjected to 50 cycles of freezing and thawing.

D. Geotextile: Conform to AHJ Standards.

PART 3 - EXECUTION

3.01 PREPARATION

A. Remove and replace unit pavers damaged due to construction activities or construction vehicle movements.

B. Prepare subgrade for surfacing as required by the Contract.

3.02 INSTALLATION

A. General:

1. Do not use precast units with chips, cracks, voids, stains, or other defects that might be visible in the finished work. Before setting precast units, examine units for conformance with specified fabrication tolerances and appearance standards. Reject units not meeting requirements.

2. Use power driven masonry saws for cutting of pavers; provide clean, sharp unchipped edges; cut to provide pattern indicated and to fit adjoining work neatly; accurately form corners. Cut straight to create a 90 degrees angle to the top/bottom of the paver. Cut the top edges of all cut pavers that abut other pavers to maintain the 1/4-inch chamfer edges. Use full units without cutting wherever possible.

B. Place Aggregate Base Course as required by the Contract.

C. Call for an inspection by the Resident Engineer and obtain written acceptance of the prepared base course before proceeding with the placement of sand bedding.

D. Geotextile: Install geotextile fabric between the aggregate base course and sand bedding.

E. Sand Bedding:

1. Spread bedding sand uniformly over the working area and screed and level to the lines and thicknesses indicated on the Contract Drawings.

2. Screed and level the sand bed to create a loose surface.

3. Remove, replace, and re-screed any area of bedding sand which becomes un-uniformly compacted by any means (including footprints).

F. Paver Block Placement:

1. Place pavers on the screeded sand from the low side to the high side.

2. Match lay pattern to existing pavers.

3. Leave a 1/8-inch joint space between pavers.

G. Compaction:

1. Use a vibrating plate compactor to consolidate the pavers and sand to the finished grade.

2. Continue compaction until the level of the pavers has stabilized.

3. Use a plate compactor that has a high frequency, low amplitude vibrator with a plate surface of at least 2-1/2 square feet.

4. Compact pavers at the completion of each day's laying.

5. Remove and replace pavers that are cracked or structurally damaged during compaction at no expense to Sound Transit.

H. Filling joints:

1. After compaction, sweep joint filling sand into the joints. Sweep away excess sand from the top surface prior to vibrating. Run a vibrating plate compactor over the pavers to work the sand into the joints. Continue the process of sweeping sand into the joints and vibrating until the joints do not accept any more sand. Repeat sand addition and vibration on a weekly basis until the joints are filled and do not accept more sand. Do not use water to wash sand into the joints.

3.03 FIELD QUALITY CONTROL

1. Vertical Installation Tolerance: Not exceeding 1/8 inch in 10 feet in any direction from level or slopes indicated when tested with a 10-foot straightedge in accordance with the ACI 117-10 straightedge tolerance requirements.

    a. The vertical installation tolerances also apply at the transition between existing and newly installed pavers.

2. Remove and reset pavers or paver areas which do not meet these tolerances at no additional cost to Sound Transit.

END OF SECTION

SECTION 32 14 13.19

PERMEABLE INTERLOCKING CONCRETE PAVEMENT

PART 1 - GENERAL

1.01 SUMMARY

A. Section Includes:

1. Requirements for the following:

a. Permeable interlocking concrete pavers.

1) Crushed stone bedding material.

2) Open-graded subbase aggregate.

3) Open-graded base aggregate.

4) Bedding and joint/opening filler materials.

5) Edge restraints.

6) Geotextiles.

1.02 REFERENCES

A. This Section incorporates by reference the latest revisions of the following documents:

1. American Society for Testing and Materials International (ASTM):

a. ASTM C67, Standard Test Methods for Sampling and Testing Brick and Structural Clay Tile.

b. ASTM C131, Standard Test Method for Resistance to Degradation of Small Size Coarse Aggregate by Abrasion and Impact in the Los Angeles Machine.

c. ASTM C136, Standard Test Method for Sieve Analysis of Fine and Coarse Aggregates.

d. ASTM C140, Standard Test Methods for Sampling and Testing Concrete Masonry Units and Related Units.

e. ASTM D448, Standard Classification for Sizes of Aggregate for Road and Bridge Construction.

f. ASTM C936/C936M, Standard Specification for Solid Concrete Interlocking Paving Units.

g. ASTM C979/C979M, Standard Specification for Pigments for Integrally Colored Concrete.

h. ASTM D698, Standard Test Methods for Laboratory Compaction Characteristics of Soil Using Standard Effort.

i. ASTM D1557, Standard Test Methods for Laboratory Compaction Characteristics of Soil Using Modified Effort.

j. ASTM D1883, Test Method for California Bearing Ratio of Laboratory-Compacted Soils.

k. ASTM D4254, Standard Test Methods for Minimum Index Density and Unit Weight of Soils and Calculation of Relative Density.

2. Interlocking Concrete Pavement Institute (ICPI):

a. Permeable Interlocking Concrete Pavement manual.

3. Authority Having Jurisdiction (AHJ):

a. Standard plans and specifications.

B. Definitions:

1. Permeable interlocking concrete pavers: Solid concrete paving units with joints that create openings in the pavement surface. The joints are filled with permeable aggregates to allow water to enter the soil or drains.

1.03 COORDINATION

A. Contractor must hold a Preconstruction meeting to discuss the approved Construction Work Plan (CWP). The CWP must address hold points, schedule of work, related approved submittals.

B. Prior to commencing any work, Contractor must provide minimum of 30 days' notice to schedule meeting(s) with Resident Engineer to discuss the work plan and schedule.

C. Review the manufacturers' quality control plan, paver installation subcontractor's Method Statement and Quality Control Plan with a permeable interlocking concrete paver pre-construction meeting of representatives from the manufacturer, paver installation Subcontractor, Contractor, Resident Engineer and/or Design Engineer of record.

D. Contractor must obtain required permit(s) for the work from AHJ.

1.04 SUBMITTALS

A. Submit:

1. Manufacturer's drawing and details: Indicate perimeter conditions, junction with other materials, expansion and control joints, paver layout, patterns, installation and setting details. Indicate layout, pattern, and relationship of paving joints to fixtures and project formed details.

2. Sieve analysis of aggregates for base and bedding materials in accordance with ASTM C136.

3. Soils report indicating density test reports, classification, and infiltration rate measured on-site under compacted conditions, and suitability for the intended project.

4. Stormwater management (quality and quantity) calculations.

5. Permeable concrete pavers:

a. Manufacturer's product catalog sheets with specifications.

b. Four representative full-size samples of each paver type, thickness, color, and finish. Submit samples indicating the range of color expected in the finished installation.

c. Accepted samples become the standard of acceptance for the work of this Section.

d. Laboratory test reports certifying compliance of the concrete pavers with ASTM C936.

e. Manufacturer's material safety data sheets for the safe handling of the specified materials and products.

6. Paver Installation Subcontractor:

a. A copy of Subcontractor’s current certificate from the Interlocking Concrete Pavement Institute Concrete Paver Installer Certification program.

b. Job references from projects of a similar size and complexity. Provide Resident Engineer/general contractor names, postal address, phone, fax, and email address.

B. Transmit:

1. Extra Stock: Furnish extra stock of quantity equal to 5 percent of amount installed, in full-size units, for each type, color, size and finish of tile to location specified by Resident Engineer.

1.05 QUALITY ASSURANCE

A. Paver Installation Subcontractor Qualifications:

1. Utilize an installer having successfully completed concrete paver installation similar in design, material, and extent indicated on this project.

2. Utilize an installer holding a current certificate from the Interlocking Concrete Pavement Institute Concrete Paver Installer Certification program.

B. Mock-Ups:

1. Install a 10-foot by 10-foot paver area.

2. Use this area to determine surcharge of the bedding sand layer, joint sizes, lines, laying pattern(s), color(s) and texture of the job.

3. This area will be used as the standard by which the work will be evaluated.

4. Subject to acceptance by Resident Engineer, mock-up may be retained as part of finished work.

5. If mock-up is not retained, remove and properly dispose of mock-up materials.

1.06 DELIVERY, STORAGE, AND HANDLING

A. General: Comply with manufacturer’s requirements for storage and protection of pavers prior to installation.

B. Comply with manufacturer’s ordering instructions and lead-time requirements to avoid construction delays.

C. Delivery: Deliver materials in manufacturer's original, unopened, undamaged container packaging with identification tags intact:

1. Coordinate delivery and paving schedule to minimize interference with normal use of buildings adjacent to paving.

2. Deliver concrete pavers to the site in steel banded, plastic banded, or plastic wrapped cubes capable of transfer by forklift or clamp lift.

3. Unload pavers at job site in such a manner that no damage occurs to the product or existing construction.

D. Storage and Protection: Store materials in protected area such that they are kept free from mud, dirt, and other foreign materials.

1.07 ENVIRONMENTAL REQUIREMENTS

A. Do not install in rain or snow.

B. Do not install frozen bedding materials.

1.08 MAINTENANCE

A. Extra materials: Provide 5 percent additional material for use by Resident Engineer for maintenance and repair.

B. Pavers must be from the same production run as installed materials.

PART 2 - PRODUCTS

2.01 PERMEABLE INTERLOCKING CONCRETE PAVERS

A. Manufacturer: Mutual Materials.

B. Permeable Interlocking Concrete Paver Units:

1. Paver Type: Eco-Prioria or approved equal:

a. Material Standard: Comply with material standards set forth in ASTM C936.

b. Standard color and finish.

c. Size: 7-3/4 inches x 7-3/4 inches x 3-1/8 inches thick.

2. Average Compressive Strength (ASTM C140): 8000 psi with no individual unit under 7200 psi.

3. Average Water Absorption (ASTM C140): 5 percent with no unit greater than 7 percent.

4. Freeze/Thaw Resistance (ASTM C67): Resistant to fifty freeze/thaw cycles with no greater than 1 percent loss of material.

2.02 CRUSHED STONE FILLER, BEDDING, BASE AND SUBBASE

A. Crushed stone with 90 percent fractured faces, LA Abrasion < 40 in accordance with ASTM C131, minimum CBR of 80 percent in accordance with ASTM D1883.

B. Do not use rounded river gravel.

C. All stone materials must be washed with less than 1 percent passing the No. 200 sieve.

D. Joint/opening filler, bedding, base and subbase: conforming to ASTM D448 gradation as shown in Tables 1, 2 and 3 below:

TABLE 1

Grading Requirements for ASTM No. 8 Bedding and Joint/Opening Filler	
Sieve Size	**Percent Passing**
1/2 in	100
3/8 in	85 to 100
No. 4	10 to 30
No. 8	0 to 10
No. 16	0 to 5

TABLE 2

Grading Requirements for ASTM No. 57 Base	
Sieve Size	**Percent Passing**
1-1/2 in	100
1 in	95 to 100
1/2 in	25 to 60
No. 4	0 to 10
No. 8	0 to 5

TABLE 3

Grading Requirements for ASTM No. 2 Subbase	
Sieve Size	**Percent Passing**
3 in	100
2-1/2 in	90 to 100
2 in	35 to 70
1-1/2 in	0 to 15
3/4 in	0 to5

E. Gradation criteria for the bedding and base:

1. $D_{15\ \text{base stone}} / D_{50\ \text{bedding stone}} < 5$

2. $D_{50\ \text{base stone}} / D_{50\ \text{bedding stone}} > 2$

2.03 ACCESSORIES

A. Provide the following accessory materials:

1. Edge Restraints.

2. Geotextile Fabric.

PART 3 - EXECUTION

3.01 EXAMINATION

A. Acceptance of Site Verification of Conditions:

1. Contractor must inspect, accept and certify in writing to the paver installation Subcontractor that site conditions meet specifications for the following items prior to installation of interlocking concrete pavers:

a. Verify that subgrade preparation, compacted density and elevations conform to specified requirements.

b. Provide written density test results for soil subgrade to the Resident Engineer, Contractor and paver installation Subcontractor.

c. Verify location, type, and elevations of edge restraints, utility structures, and drainage pipes and inlets.

2. Subgrade acceptance: Do not proceed with installation of bedding and interlocking concrete pavers until subgrade soil conditions conform to the specified requirements and accepted by the Contractor or designated Subcontractor.

3.02 PREPARATION

A. Verify that the soil subgrade is free from standing water.

B. Stockpile joint/opening filler, base and subbase materials such that they are free from standing water, uniformly graded, free of any organic material or sediment, debris, and ready for placement.

C. Edge Restraint Preparation:

1. Install edge restraints at the elevations indicated on the issued for Construction Drawings.

3.03 INSTALLATION

A. General:

1. Remove any excess thickness of soil applied over the excavated soil subgrade to trap sediment from adjacent construction activities before application of the geotextile and subbase materials.

2. Keep area where pavement is to be constructed free from sediment during entire job. Geotextiles Base and bedding materials contaminated with sediment must be removed and replaced with clean materials.

3. Do not damage drainpipes, overflow pipes, observation wells, or any inlets and other drainage appurtenances during installation. Report any damage immediately to the Resident Engineer.

B. Geotextiles:

1. Place on bottom and sides of soil subgrade. Secure in place to prevent wrinkling from vehicle tires and tracks.

2. Overlap a minimum of 24 inches in the direction of drainage.

C. Open-graded subbase and base:

1. Moisten, spread and compact the No. 2 subbase in 4 to 6 inch lifts without wrinkling or folding the geotextile. Place subbase to protect geotextile from wrinkling under equipment tires and tracks.

2. For each lift, make at least two passes in the vibratory mode then at least two in the static mode with a minimum 10-ton vibratory roller until there is no visible movement of the No. 2 stone. Do not crush aggregate with the roller.

3. The surface tolerance of the compacted No. 2 subbase must be within 3/4 inch over a 10-foot straightedge.

4. Moisten, spread and compact No. 57 base in 4 to 6 inch lifts over the compacted No. 2 subbase with a minimum 10-ton vibratory roller until there is no visible movement of the No. 57 stone. Do not crush aggregate with the roller.

5. The surface tolerance the compacted No. 57 base must not deviate more than 1/2 inch over a 10-foot straightedge.

D. Bedding layer:

1. Moisten, spread and compact the No. 8 bedding material. Compact with a minimum 10-ton static roller. Make at least 4 passes. No visible movement must occur in the base material when compaction is complete. Do not crush aggregate with the roller.

2. The surface tolerance of the compacted surface must not deviate more than 1/2 inch over a 10-foot straightedge.

E. Permeable interlocking concrete pavers and joint/opening fill material

1. Lay the pavers in the pattern(s) and joint widths shown on the issued for Construction Drawings. Maintain straight pattern lines.

2. Fill gaps at the edges of the paved area with cut units. Cut pavers subject to tire traffic must be no smaller than 1/3 of a whole unit.

3. Cut pavers to be placed along the edges with a double-bladed splitter or masonry saw.

4. Compact and seat the pavers into the bedding material using a low-amplitude, 75-90 Hz plate compactor capable of at least 5,000 lbs. centrifugal compaction force. This will require at least two passes with the plate compactor.

5. Do not compact within 6 feet of the unrestrained edges of the paving units.

6. Fill the openings and joints with No. 8 stone.

7. Remove excess aggregate by sweeping pavers clean.

8. Compact the pavers again, vibrating the aggregate into the openings. Apply additional aggregate to the openings and joints, filling them completely. Remove excess aggregate by sweeping and compact the pavers. This will require at least two passes with the plate compactor.

9. All pavers within 6 feet of the laying face must be left fully compacted at the completion of each day.

10. The final surface tolerance of compacted pavers must not deviate more than ±3/8 inch under a 10 feet long straightedge.

11. The surface elevation of pavers must be 1/8 to1/4 inch above adjacent drainage inlets, concrete collars or channels.

3.04 FIELD QUALITY CONTROL

A. After sweeping the surface clean, check final elevations for conformance to the drawings.

B. Lippage: No greater than 1/8 inch difference in height between adjacent pavers.

C. The surface elevation of pavers must be 1/8 to 1/4 inch above adjacent drainage inlets, concrete collars or channels.

3.05 PROTECTION

A. After work in this section is complete, protect the work from sediment deposition and damage due to subsequent construction activity on the site.

3.06 CLOSEOUT ACTIVITIES

A. Contractor must return to site after 6 months from the completion of the work and provide the following as required:

1. Fill paver joints with stones, replace broken or cracked pavers.

2. Re-level settled pavers to initial elevations.

B. Any additional work must be considered part of the original bid price and with no additional cost to Sound Transit.

END OF SECTION

SECTION 32 16 13

CONCRETE CURBS AND GUTTERS

PART 1 - GENERAL

1.01 SUMMARY

A. Section includes:

1. Requirements for furnishing and installation of concrete curbs and gutters.

1.02 REFERENCES

A. This Section incorporates by reference the latest revisions of the following documents:

1. American Society for Testing and Materials International (ASTM):

a. ASTM A615/A615M Standard Specification for Deformed and Plain Carbon-Steel Bars for Concrete Reinforcement.

b. ASTM C143/C143M Standard Test Method for Slump of Hydraulic Cement Concrete.

c. ASTM C150/C150M Standard Specification for Portland Cement.

2. American Concrete Institute (ACI):

a. ACI 117-10: Specification for Tolerances for Concrete Construction and Materials.

3. Washington State Department of Transportation (WSDOT):

a. WSDOT Standard Plans and Standard Specifications for Road, Bridge, and Municipal Construction.

4. Authority Having Jurisdiction (AHJ):

a. Standard plans and specifications.

1.03 COORDINATION

A. Contractor must hold a preconstruction meeting to discuss the approved Construction Work Plan (CWP). The CWP must address hold points, schedule of work, related approved submittals.

B. Prior to commencing any work, Contractor must provide minimum of 30 days notice to schedule meeting(s) with Resident Engineer to discuss the work plan and schedule.

C. Contractor must obtain required permit(s) for the work from AHJ.

1.04 SUBMITTALS

A. Submit:

1. Product Data: Manufacturer’s product data for manufactured products.

2. Mix Design: Submit as specified in WSDOT Standard Specifications Section 6-02 or in accordance with AHJ requirements.

3. Shop Drawings:

a. Submit drawings showing the locations of all joints in concrete, including construction joints, expansion joints, isolation joints, and contraction joints.

b. Submit drawings indicating concrete placement method, sequence, location, and boundaries. Include each type and class of concrete, and quantity in cubic yards.

PART 2 - PRODUCTS

2.01 MATERIALS

A. Materials must be in accordance with WSDOT Standard Specifications Section 8-04 or the AHJ requirements.

2.02 SOURCE QUALITY CONTROL

A. Testing and Analysis: Perform all testing and analysis of materials used in accordance with ASTM tests listed in this Specification or the AHJ requirements.

PART 3 - EXECUTION

3.01 PERMITTING

A. Coordinate with Sound Transit Permit team for applying permit for construction.

3.02 SURVEY

A. Perform Survey in accordance with Sound Transit or AHJ requirements before construction work.

B. Coordinate with Utility companies to locate and delineate utilities before any construction work.

3.03 CONSTRUCTION

A. General:

1. Construct curbs or curbs and gutters in accordance with WSDOT Standard Specifications, Section 8-04 or AHJ requirements.

2. Construct curbs or curbs and gutters as shown on the issued Construction Drawings, and as referenced in WSDOT Standard Plan F-10.12-04 or in accordance with AHJ Standard Plans.

3.04 FIELD QUALITY CONTROL

A. Verify that grade must not deviate more than 1/8 inch and alignment must not vary more than 1/4 inch, when checking with a 10-foot straightedge in accordance with the ACI 117-10 straightedge tolerance requirements.

B. For curbs and gutters constructed in accordance with AHJ requirements, verify the construction meets all requirements before requesting AHJ to perform final inspection.

C. Take corrective actions without any additional cost to Sound Transit, if AHJ directs to update the curbs and gutters not constructed in accordance with the AHJ requirements.

END OF SECTION

SECTION 32 17 23

PAVEMENT MARKINGS AND RAISED PAVEMENT MARKERS

PART 1 - GENERAL

1.01 SUMMARY

A. Section includes:

1. Requirements for furnishing, installing, and removing raised pavement markers and pavement markings.

1.02 REFERENCES

A. This Section incorporates by reference the latest revisions of the following documents:

1. Washington State Department of Transportation (WSDOT):

a. Standard Specifications for Road, Bridge, and Municipal Construction.

b. Standard Plans.

2. Authority Having Jurisdiction (AHJ):

a. Standard plans and specifications.

1.03 COORDINATION

A. Contractor must hold preconstruction meeting to discuss the approved Construction Work Plan (CWP). The CWP must address hold points, schedule of work, related approved submittals.

B. Prior to commencing any work, Contractor must provide minimum of 30 days' notice to schedule meeting(s) with Resident Engineer to discuss the work plan and schedule.

C. Contractor must obtain required permit(s) for the work from AHJ.

1.04 SUBMITTALS

A. Submit:

1. Manufacturers' product data.

2. Method(s) for removing existing and temporary pavement markings.

PART 2 - PRODUCTS

2.01 MATERIALS

A. For pavement markings on Sound Transit owned roadways and parking areas, the materials used in the Work must conform to WSDOT Standard Specifications Sections 8-09 and 8-22, unless specified otherwise in the Contract.

B. For pavement markings on roadways and parking areas that will be owned or maintained by AHJs, the material used in the Work must conform to AHJ standards and applicable provisions of WSDOT Standard Specifications Sections 8-09 and 8-22, unless specified otherwise in the Contract.

2.02 CONSTRUCTION

A. For pavement markings on Sound Transit owned roadways and parking areas, the Work must conform to WSDOT Standard Specifications Sections 8-09 and 8-22, unless specified otherwise in the Contract.

B. For pavement markings on roadways and parking areas that will be owned or maintained by AHJs, the Work must conform to AHJ standards and applicable provisions of WSDOT Standard Specifications Sections 8-09 and 8-22, unless specified otherwise in the Contract.

C. For existing asphalt pavement areas, place a bituminous seal coat over the existing pavement prior to placing proposed pavement marking(s). Placement of the bituminous seal coat must be in accordance with WSDOT Standard Specifications Section 5-02.1(3).

2.03 TEMPORARY PAVEMENT MARKINGS

A. For temporary pavement markings on WSDOT facilities, conform to WSDOT Standard Specifications Sections 8-23 and the contract plans.

B. For temporary pavement markings on AHJ facilities, conform to AHJ standards and applicable provisions of WSDOT Standard Specifications Section 8-23 and the contract plans.

C. For temporary pavement markings on Sound Transit facilities, conform to WSDOT Standard Specifications Section 8-23 and the contract plans. WSDOT Standard Specifications Section 8-23.2 is revised to read as following:

1. Materials for temporary markings must be removable temporary pavement marking tape, Temporary Pavement Marking Tape - Long Duration, selected from approved materials listed in the WSDOT Qualified Products List.

END OF SECTION

SECTION 32 31 13

CHAIN LINK FENCES AND GATES

PART 1 - GENERAL

1.01 SUMMARY

A. Section includes:

1. Requirements for furnishing and installation of permanent chain link fencing, which includes gates, posts, links, wires, fittings, hardware, anchors, and concrete footings.

1.02 REFERENCES

A. This Section incorporates by reference the latest revisions of the following documents:

1. American Society for Testing and Materials (ASTM) International:

a. ASTM A121 Standard Specification for Metallic-Coated Carbon Steel Barbed Wire.

b. ASTM A153/A153M Standard Specification for Zinc Coating (Hot-Dip) on Iron and Steel Hardware.

c. ASTM D2247 Standard Practice for Testing Water Resistance of Coatings in 100% Relative Humidity.

d. ASTM D2794 Standard Test Method for Resistance of Organic Coatings to the Effects of Rapid Deformation (Impact).

e. ASTM D3359 Standard Test Methods for Measuring Adhesion by Tape Test.

f. ASTM F567 Standard Practice for Installation of Chain-Link Fence.

g. ASTM F626 Standard Specification for Fence Fittings.

h. ASTM F668 Standard Specification for PolyVinyl Chloride (PVC), Polyolefin and Other Polymer-Coated Steel Chain Link Fence Fabric.

i. ASTM F1234 Standard Specification for protection coatings on steel framework for fences.

2. American Association of Station Highway and Transportation Officials (AASHTO):

a. AASHTO M 181 Standard Specification for Chain-Link Fence.

3. Federal Specification (MIL):

a. MIL-P-21035B Paint High Zinc Dust Content, Galvanizing Repair.

4. Institute of Electrical and Electronics Engineers (IEEE):

a. IEEE C2 National Electrical Safety Code (NESC).

b. IEEE 81 Guide for Measuring Earth Resistivity, Ground Impedance, and Earth Surface Potentials of a Grounding System.

5. Washington State Department of Transit (WSDOT):

a. WSDOT Standard Specifications for Road, Bridge, and Municipal Construction

6. Authority Having Jurisdiction (AHJ):

a. Standard plans and specifications.

1.03 COORDINATION

A. Contractor must hold a preconstruction meeting to discuss the approved Construction Work Plan (CWP). The CWP must address hold points, schedule of work, related approved submittals.

B. Prior to commencing any work, contractor must provide minimum of 30 days notice to schedule meeting(s) with Resident Engineer to discuss the work plan and schedule.

C. Contractor must obtain required permit(s) for the work from AHJ.

1.04 SUBMITTALS

A. Submit:

1. Shop Drawings:

a. Fences and gates layout, including installation and design details of the fencing, posts, concrete footings, gates, hardware, and accessories for review.

b. Hardware and Accessories, including electronic access controls.

c. System integration coordination plan for access control for door hardware.

d. Include Plans, Elevations, Section details and attachments to existing facilities.

2. Product Data:

a. Datasheet for specific product, model, finishes and features. Provide manufacturer's cut sheets and installation instructions for fencing and gates.

3. Maintenance Data:

a. Manufacturer's recommended method for repairing damage to finish.

4. Informational Submittals

a. Field quality-control reports.

b. Product Test Reports: Include finish, indicating compliance with referenced standard and other specified requirements.

B. Transmit:

1. Warranties:

a. Manufacturer's standard warranties for each manufactured product.

b. Minimum 15 years warranty for all hardware and accessories.

PART 2 - PRODUCTS

2.01 MATERIALS

A. Fencing must include framework, concrete footings, fabric covering, hardware, and other accessories as required, for a complete installation.

B. Fence Posts, rails and concrete footings for fence posts must conform to WSDOT Standard Specifications, Section 9-16.1.

1. Posts and rails must be black vinyl coated.

2. Concrete must conform to commercial concrete in accordance with WSDOT Standard Specification 6-02.3(2)B.

C. Tension wires must conform to AASHTO M 181, Class 1. Wires must be galvanized and colored black.

D. Chain link fencing fabric must be 9 gauge core wire, zinc-coated steel wire woven diamond mesh, conforming to AASHTO M 181, Class C. Fabric must be black vinyl coated, thermally fused and bonded method per ASTM F668, Class 2b. Width and top and bottom finish of the fabric as specified in AASHTO M 181:

1. Fence Mesh opening as indicated on the Sound Transit Standard Drawings for different types of fencing.

E. Powder Coating: The polyester powder surface coating must be black polyester coating to be a minimum 4 mils applied by an electrostatic method. Coating must cover all surfaces of the wire and post sections. Coating must be capable of withstanding the following tests:

1. Mechanical adhesion test as per ASTM D3359 - Method B.

2. Shock resistance tests as per ASTM D2794.

3. Humidity resistance in a weatherometer chamber as per ASTM D2247.

F. Construct chain link gate frames with no less than 1-1/2 inches inside diameter steel pipes, hot-dip galvanized, with nominal weight of 2.72 pounds per linear foot. Complete each gate with hinges, latch, and drop bar locking device suitable for fencing system. Provide provision for padlocking the latch device. All components must be colored black:

1. Fasten the corners of the gate frame together and reinforce with a malleable iron or pressed steel fitting designed for that purpose, or corners shall be welded together.

2. Welding must conform to WSDOT Standard Specification Section 6-03.3(25). Welds shall be grinded smooth and painted with a high zinc dust content paint in accordance with requirements of MIL-P-21035B. Paint shall be applied in coats to achieve a dry film thickness of 3.5 millimeters minimum.

3. Cross trussing must be made of 3/8 inch galvanized, adjustable steel rods.

4. Gate posts, rails, hardware, and fittings must be black powder coated. Gate fencing fabric must be vinyl coated.

G. Fittings and hardware must be made of malleable cast iron or pressed steel, conforming to ASTM F626. Any galvanizing of hardware not covered by ASTM F626 must conform to ASTM A153/A153M. Fittings for fence must be furnished by the fence manufacturer. Fittings and Hardware must be black powder coated.

PART 3 - EXECUTION

3.01 CONSTRUCTION

A. Stake locations of fence lines, terminal posts, and underground utilities. Clear and grade both sides of the fence line as required.

B. Install fencing and gates in accordance with ASTM F567.

C. Post Location: Install posts at equal distances, not greater than 10 feet, unless noted otherwise on the issued for Construction Drawings. Confirm posts' foundations are not in conflict with underground utilities.

D. Drop Bar Inserts: Install drop bar inserts in both open and closed positions of gates, so that gates can be secured in either position.

E. Post Setting: Set posts at correct heights and spacing; hold posts in place during concrete setting.

F. Concrete Fill: Place concrete fill around posts to the dimensions indicated on the issued for Construction Drawings; vibrate or tamper concrete fill for consolidation.

G. Crown top of footings to shed water. Protect posts above ground from concrete splatter.

H. Verify that AHJ has reviewed the placement of fencing in wetland, stream, buffer or other sensitive area for required fencing type and any permit conditions.

3.02 FIELD QUALITY CONTROL

A. Testing Agency: Where grounding of the fence is required by the Contract, Contractor must engage a qualified testing agency approved by Sound Transit to perform tests and inspections:

1. Grounding-Resistance Tests: Subject completed grounding system to a Megger test at each grounding location. Measure grounding resistance not less than 2 full days after last trace of precipitation, without soil having been moistened by any means other than natural drainage or seepage and without chemical treatment or other artificial means of reducing natural grounding resistance. Perform tests by two-point method according to IEEE 81.

2. Excessive Grounding Resistance: If resistance to grounding exceeds specified value, notify Resident Engineer promptly. Include recommendations for reducing grounding resistance and a proposal to accomplish recommended work.

3. Report: Prepare test reports of grounding resistance at each test location certified by a testing agency. Include observations of weather and other phenomena that may affect test results.

3.03 ADJUSTING

A. Gates: Adjust gates to operate smoothly, easily, and quietly, free of binding, warp, excessive deflection, distortion, nonalignment, misplacement, disruption, or malfunction, throughout entire operational range. Confirm that latches and locks engage accurately and securely without forcing or binding.

B. Lubricate hardware and other moving parts.

C. All corrective painting shall be per SSPC PA 1 Shop, Field, and Maintenance Painting of Steel.

3.04 CLOSEOUT ACTIVITIES

A. Demonstration:

1. Contractor must demonstrate gate operation in the presence of Sound Transit's personnel to adjust, operate, and maintain gates.

B. Training:

1. Contractor must provide required training to Sound Transit staff to operate the gate in accordance with the manufacturer's instructions.

3.05 PROTECTION

A. Protect installed products from damage during subsequent construction.

B. Replace fences and gates damaged or deteriorated beyond successful repair by finish touchup or similar minor repair procedures at no additional cost to Sound Transit.

3.06 REMOVE AND RESET FENCE

A. Any existing fence that is removed to facilitate construction, but not indicated on the issued Construction Drawing for removal, must be protected, stored, and reinstalled to its original location and condition upon completion of the work at no additional cost to Sound Transit.

B. Remove and dispose of any existing fence and gates that are damaged during construction operations; replace all damaged sections with new fence and gates of equal or better materials, and construct as required by the Contract and AHJ requirements at no additional cost to Sound Transit.

END OF SECTION

32 31 56

STEEL PICKET FENCES AND GATES

PART 1 - GENERAL

1.01 SUMMARY

A. Section includes:

1. Requirements for the following:

a. Steel Picket (Decorative) Fences.

b. Steel Picket Swing Gates.

1.02 REFERENCES

A. This Section incorporates by reference the latest revisions of the following documents:

1. ASTM International (ASTM):

a. ASTM A29/A29M Standard Specification for Steel Bars, Carbon and Alloy, Hot-Wrought, General Requirements.

b. ASTM A36/A36M Standard Specification for Carbon Structural Steel.

c. ASTM A48/A48M Standard Specification for Gray Iron Castings.

d. ASTM A123/A123M Standard Specification for Zinc (Hot-Dip Galvanized) Coatings on Iron and Steel Products.

e. ASTM A153/A153M Standard Specification for Zinc Coating (Hot-Dip) on Iron and Steel Hardware.

f. ASTM A500/A500M Standard Specification for Cold-Formed Welded and Seamless Carbon Steel Structural Tubing in Rounds and Shapes.

g. ASTM A510/A510M Standard Specification for General Requirements for Wire Rods and Coarse Round Wire, Carbon Steel, and Alloy Steel.

h. ASTM F593 Standard Specification for Stainless Steel Bolts, Hex Cap Screws, and Studs.

i. ASTM A653/A653M Standard Specification for Steel Sheet, Zinc-Coated (Galvanized) or Zinc-Iron Alloy-Coated (Galvannealed) by the Hot-Dip Process.

j. ASTM A792/A792M Standard Specification for Steel Sheet, 55 percent Aluminum-Zinc Alloy-Coated by the Hot-Dip Process

k. ASTM A1008/A1008M Standard Specification for Steel, Sheet, Cold-Rolled, Carbon, Structural, High-Strength Low-Allow, High-Strength Low-Alloy with Improved Formability, Solution Hardened, and Bake Hardenable

l. ASTM A1011/A1011M Standard Specification for Steel, Sheet and Strip, Hot-Rolled, Carbon, Structural, High-Strength Low-Alloy, High-Strength Low-Alloy with Improved Formability, and Ultra-High Strength.

m. ASTM B117 Standard Practice for Operating Salt Spray (Fog) Apparatus.

n. ASTM F2408 Standard Specification for Ornamental Fences Employing Galvanized Steel Tubular Pickets.

2. American Welding Society (AWS) Specifications.

3. Institute of Electrical and Electronics Engineers (IEEE):

a. IEEE C2 National Electrical Safety Code (NESC).

b. IEEE 81 Guide for Measuring Earth Resistivity, Ground Impedance, and Earth Surface Potentials of a Grounding System.

4. National Association of Architectural Metal Manufacturers (NAAMM):

a. NAAMM MBG 531 Metal Bar Grating Manual.

5. National Fire Protection Association (NFPA):

a. NFPA 780 Standard for the Installation of Lighting Protection Systems.

6. The Society for Protective Coatings (SSPC):

a. SSPC PA 1 Shop, Field, and Maintenance Painting of Steel.

7. Underwriters Laboratories (UL):

a. UL 467 Grounding and Bonding Equipment.

1.03 COORDINATION

A. Contractor must hold a preconstruction meeting to discuss the approved Construction Work Plan (CWP). The CWP must address hold points, schedule of work and related approved submittals.

B. Prior to commencing any work, Contractor must provide minimum of 30 days notice to schedule meeting(s) with Resident Engineer to discuss the work plan and schedule.

C. Contractor must obtain required permit(s) for the work from AHJ.

D. .

1.04 SUBMITTALS

A. Submit:

1. Product Data: Identify specific product, model, finishes and features. Provide manufacturer's installation instructions.

2. Shop Drawings:

a. For gates include plans, elevations, sections, details, and attachments to other work:

1) Include diagrams for power, signal, and control wiring where applicable.

2) For all products proposed for substitution to specified products.

b. Weathering Steel Decorative Panels: Show fabrication and installation layouts of panels; including details of perforated pattern, edge conditions, joints, panel profiles, corners, anchorages, attachment system, and accessories; and special details.

c. Steel Perforated Panel Fence:

1) Show fabrication and installation layouts of panels, including corner, gate and intermediate post details, Show joint and edge conditions, panel profiles, corners, fasteners, anchorages, attachment system, accessories; and special details.

2) Samples: For each fence material and for each color specified, provide samples in segments that are minimum 3 feet in length and 12 inches in height.

3. Maintenance Data: Include maintenance data for gate operation in maintenance manuals. Include manufacturer's recommended method for repairing damage to finish.

B. Transmit:

1. Field quality-control reports.

2. Product Test Reports: For steel picket (decorative) fence, including finish, indicating compliance with referenced standard and other specified requirements.

3. Warranties:

a. Manufacturer's standard warranties for each manufactured product.

b. 15 year warranty.

c. Warranty on coating materials against cracking, peeling, chipping, blistering or corroding; and any defects in workmanship or materials.

1.05 QUALITY ASSURANCE

A. Manufacturer Qualifications: A company experienced in manufacturing products similar to those required for this project and with a record of successful performance on completed and installed projects for a minimum of 5 years.

B. Installer Qualifications: A licensed and experienced installer who has completed installation of products similar in material, design, and extent to that indicated for this Project and whose work has resulted in construction with a record of successful performance after installation for a minimum of 5 years.

C. Mockups: Build mockups to verify selections made as shown on the issued for Construction Drawings to demonstrate aesthetic effects, and to set quality standards for fabrication and installation.

1. Provide 10-foot length- mockup of fence as required by the Contract.

2. Subject to compliance with requirements, approved mockups may become part of the completed Work if undisturbed at time of Substantial Completion and meeting all Contract provisions.

D. Manufacturer's Instructions: Adhere to manufacturer's instructions for product handling, assembly and installation, and maintenance.

E. Manufacturer's original factory finish must be intact for the installation to be considered satisfactory. On-site touch-up painting or finishing must not be accepted unless Sound Transit verifies the correction method and approves the request as required by the Contract.

F. Inspect surfaces to receive furnishings prior to any installation. Verify accuracy of layout. Ensure that surface and grades are complete and meet quality requirements of the Contract and the Resident Engineer. If layout, grades, or surface do not meet quality requirements, immediately notify Resident Engineer.

G. Ensure fencing is plumb and centered and aligned as shown on the issued for Construction Drawings.

H. Verify orientation and layout of fencing in the field with Resident Engineer prior to installation.

1.06 DELIVER, STORAGE, AND HANDLING

A. Deliver products without damage or deformation.

B. Deliver materials to site in manufacturer's original, unopened containers and packaging, with labels clearly identifying product name and manufacturer.

C. Store products to prevent corrosion, deterioration, and damage.

D. Handle products to prevent damage.

E. Bent, dented, scratched, chipped, or otherwise damaged items are not acceptable.

PART 2 - PRODUCTS

2.01 MATERIALS

A. Comply with Manufacturer's recommendations: Where these may be in conflict with the Contract, the more stringent requirements prevail.

B. Supply all products as specified in the Contract. .

2.02 STEEL PICKET (DECORATIVE) FENCE

A. Metal Fence: Comply with ASTM F2408 for for steel tubular pickets unless otherwise indicated:

1. Basis-of-Design Product: Subject to compliance with requirements, provide Ameristar Impasse II Anti-Scale, Stronghold style pales, powder coat, Black:

a. Or comparable product by one of the following:

1) Beta Fence USA LLC.

2) Fortress Iron.

3) Hill & Smith Inc.

4) Iron Eagle Industries, Inc.

5) Iron World Manufacturing, LLC.

2. Fence framework (pickets, rails and posts) must be steel material, when galvanized prior to framing, must conform to the requirements of ASTM A924/A924M, with a minimum yield strength of 45,000 psi (310 MPa). The steel must be hot dipped galvanized to meet the requirement of ASTM A653/A653M with a minimum zinc coating weight of 0.90 ounce per square foot (276 g/sq. m), coating designation G-90.

3. Material for corrugated pales must be a nominal 2.75 inches by 0.75 inch by 14 gauge. The cross-sectional shape of the rails must conform to the manufacturer's Impasse II® rail design a nominal 2 inches by 2 inches by 11 gauge. Pre-drilled holes in the Impasse II® rail must be spaced 4-3/16 inches on center, providing a pale airspace of no greater than 1-1/2 inches (38mm). Tamperproof fasteners must be used to fasten each pale to rail at every intersection.

4. Pales, rails and posts must be pre-cut to specified lengths.

    a. Pre-punch rails to accept tamperproof security fasteners.

    b. Pre-punch post flange to accept rail to post attachment.

    c. Pre-punch post web to provide a clear opening for interior of rails to align throughout the entire system for affixing conduit, video cabling, IDS wiring, and other components for a complete systems integration.

    d. Attach Anti-Climb rails to post flange to provide a bracket-less design at each intermediate post.

5. Subject the manufactured galvanized framework to the PermaCoat® thermal stratification coating process (high-temperature, in-line, multi-stage, multi-layer) including, as a minimum, a six-stage pretreatment/wash (with zinc phosphate), an electrostatic spray application of an epoxy base, and a separate electrostatic spray application of a polyester finish.

    a. The base coat must be a thermosetting epoxy powder coating with a minimum thickness of 2 mils (0.0508mm). The base coat color must be gray.

    b. The topcoat must be a “no-mar” TGIC polyester powder coat finish with a minimum thickness of 2 mils (0.0508mm). The topcoat color must be Black.

6. Completed panels must be capable of supporting a 400 lb. load (applied at midspan) without permanent deformation. Panels must be biasable to a 30 degree change in grade.

B. Fence Posts and Caps: Formed from steel sheet and hot-dip galvanized after forming. Posts must be nominally 3 inches by 3 inches, minimum 12 gauge, with post cap to fit. Spacing of the posts must not exceed 96 inches on center. Fence posts and gate posts must meet the minimum size requirements as indicated on the issued for Construction Drawings. Fence posts must meet the following requirements:

1. Posts must be square-shaped.

2. Cross-sectional shape of the posts must conform to the manufacturer's Impasse II® rail design a nominal 2 inches by 2 inches.

3. Metal and Thickness: 12 gauge steel

4. Pre-drill posts to accept pickets with spacing of 4.7 inches on center such that picket airspace is no greater than 3.75 inches.

C. Steel Pickets:

1. Pickets: square-shaped.

2. Pickets must be nominally sized 1 inch by 1 inch, 14 gauge steel.

3. Picket Spacing: 3.75 inches clear, maximum.

D. Pales:

1. Material for corrugated pales must be a nominal 2.75 inches by 0.75 inch by 14 gauge.

2. Pale airspace must not be exceed 1.50 inches (38mm).

3. Use tamperproof fasteners at every intersection to fasten each pale to rail.

E. Fasteners: Manufacturer's standard tamperproof corrosion-resistant, color-coated fasteners matching fence components with resilient polymer washers.

F. Metallic-Coated Steel Sheet: Galvanized-steel sheet or aluminum-zinc, alloy-coated steel sheet.

G. Interior surface of tubes formed from uncoated steel sheet must be hot-dip zinc coated same as exterior.

H. Galvanizing: For components indicated to be galvanized and for which galvanized coating is not specified in ASTM F2408, hot-dip galvanize must comply with ASTM A123/A123M. For hardware items, hot-dip galvanize must comply with ASTM A153/A153M.

I. Finish: Powder coating as required by the Contract.

2.03 STEEL PICKET SWING GATES

A. Gate Configuration: Swing direction as indicated on the issued for Construction Drawings. Provide 270-degree swing angle on all gates.

B. Gate Frame Height: Height to match adjacent fence unless otherwise indicated on the issued for Construction Drawings.

C. Gate Opening Width: As indicated on the issued for Construction Drawings.

D. Galvanized-Steel Frames and Bracing: Fabricate members from square tubes hot-dip galvanized:

1. For gate leafs up to 6 feet width: Posts must be nominally 3 inches square steel, 12 gauge.

2. For gate leafs greater than 6 feet up to 10 feet width, posts must be nominally 6 inches square, 3/16 inches thickness steel.

3. Gate uprights and gate rails must be nominally 2 inches square, 12 gauge steel.

E. Frame Corner Construction: Welded or assembled with corner fittings and 5/16-inch (7.9 millimeters) diameter, adjustable truss rods for panels 5 feet (1.52 meters) wide or wider.

F. Additional Rails: Provide as required for a complete fence installation, complying with requirements for fence rails.

G. Infill: Comply with requirements for adjacent fence.

H. Rail Size, Configuration, and Spacing: Comply with requirements for adjacent fence.

I. Hardware latches, hinges, fasteners and locking mechanisms as provided by manufacturer unless otherwise noted on the issued for Construction Drawings. Door hardware must be as required by the Contract.

J. Cane Bolts: Provide for inactive leaf of pairs of gates. Fabricated from 1/2-inch (12.7 millimeters) diameter, round steel bars, hot-dip galvanized after fabrication. Finish to match gates. Provide galvanized-steel pipe strikes to receive cane bolts in both open and closed positions.

K. Finish exposed welds to comply with NOMMA Guideline 1, Finish #2—completely sanded joint, some undercutting and pinholes okay.

L. Galvanizing: For components other than hardware that are indicated to be galvanized, hot-dip galvanize must comply with ASTM A123/A123M. For hardware items, hot-dip galvanize must comply with ASTM A153/A153M.

M. Metallic-Coated-Steel Finish: High-performance coating as required by the Contract.

N. Steel Finish: High-performance coating as required by the Contract.

2.04 STEEL AND IRON

A. Plates, Shapes, and Bars: ASTM A36/A36M

B. Bars (Pickets): Hot-rolled, carbon steel complying with ASTM A29/A29M, Grade 1010

C. Tubing: ASTM A500/A500M, cold-formed steel tubing

D. Bar Grating: NAAMM MBG 531:

1. Bars: Hot-rolled steel strip, ASTM A1011/A1011M, Commercial Steel, Type B.

2. Wire Rods: ASTM A510/A510M.

E. Uncoated Steel Sheet: Cold-rolled steel sheet, ASTM A1008/A1008M, Structural Steel, Grade 50 (Grade 340).

F. Galvanized-Steel Sheet: ASTM A653/A653M, structural quality, Grade 50 (Grade 340), with G90 (Z275) coating.

G. Aluminum-Zinc, Alloy-Coated Steel Sheet: ASTM A792/A792M, structural quality, Grade 50 (Grade 340), with AZ60 (AZM180) coating.

H. Castings: Either gray or malleable iron unless otherwise indicated on the issued for Construction Drawings:

1. Gray Iron: ASTM A48/A48M, Class 30.

2. Malleable Iron: ASTM A 47/A 47M.

2.05 COATING MATERIALS

A. Shop Primers for Steel: Provide primers that comply with high-performance coatings as required by the Contract.

1. Manufacturer's standard lead and chromate-free, nonasphaltic, rust-inhibiting primer complying with MPI #79 and compatible with topcoat.

B. Primer for Galvanized Steel:

1. Six stage thermal stratification process of zinc phosphate wash until film weight of 150 to 300 milligrams/square foot is achieved on surface area.

2. Post rinse with Chromic Acid Rinse Epoxy Intermediate Coat for Uncoated Steel: Complying with MPI #77 and compatible with primer and topcoat.

3. Thermosetting epoxy base coat shall have minimum dry thickness of 2 mils (0.05 millimeters).

C. Polyester Powder Topcoat: Complying with MPI #72 and compatible with undercoat:

1. The material shall be a thermosetting polyester powder; the minimum thickness of the finish coat must be 2 mils.

2. Minimum total dry film thickness of all coatings not less than 8 mils (0.20 millimeters).

3. Finish must be able to endure a salt-spray resistance test in accordance with ASTM B117 without loss of adhesion for a minimum exposure time of 3,500 hours and must be able to demonstrate the ability to withstand exposure in a weather-ometer apparatus for 1,000 hours without failure in accordance with ASTM D1499 and to show satisfactory adhesion when subjected to the cross- hatch test, Method B, in ASTM D3359.

4. The polyester finish coat must not crack, blister or split under normal use.

5. Color and Gloss: Black, semi-gloss.

D. Have a 15-year warranty against cracking, peeling, chipping and blistering or corroding.

PART 3 - EXECUTION

3.01 EXAMINATION

A. Examine areas and conditions, with Installer present, for compliance with requirements for site clearing, earthwork, pavement work, construction layout, and other conditions affecting performance of the Work.

B. Do not begin installation before final grading is completed unless otherwise permitted by Resident Engineer.

C. Proceed with installation only after unsatisfactory conditions have been corrected.

3.02 PREPARATION

A. Stake locations of fence lines, gates, and terminal posts for Resident Engineer review and approval prior to installation:

1. Do not exceed intervals of 100 feet or line of sight between stakes.

2. Indicate locations of utilities, lawn irrigation system, including irrigation head, or drip tubing locations, underground structures, benchmarks, and property monuments.

B. Construction layout and field engineering must be as required by the Contract.

3.03 FENCE INSTALLATION

A. Install fences according to manufacturer's written instructions.

B. Post Excavation: Drill or hand-excavate holes for posts in firm, undisturbed soil as shown on the issued for Construction Drawings. Excavate holes to a diameter of not less than 4 times post size and a depth of not less than 42 inches (1,055 millimeters).

C. Post Setting: Set posts in concrete as shown on the issued for Construction Drawings and per manufacturer's recommendation at indicated spacing into firm, undisturbed soil:

1. Verify that posts are set plumb, aligned, and at correct height and spacing, and hold in position during setting with concrete or mechanical devices.

2. Concrete Fill:

a. Place concrete around posts and sleeves and vibrate or tamp for consolidation. Protect aboveground portion of posts from concrete splatter.

b. Exposed Concrete: Top of concrete surface shall be flush with adjacent finish grade unless otherwise indicated on the issued for Construction Drawings. Finish and slope top surface to drain water away from post, maximum one percent slope.

3. Posts Set in Concrete: Extend post to within 6 inches of specified excavation depth, but not closer than 3 inches to bottom of concrete.

4. Posts Set into Concrete in Sleeves: Sleeves type and size shall be as shown on the Contract Drawings, preset and anchored into concrete for installing posts:

a. Extend posts at least 12 inches into sleeve.

b. After posts have been inserted into sleeves, fill annular space between post and sleeve with nonshrink grout, mixed and placed to comply with grout manufacturer's written instructions; shape and smooth to shed water. Finish and slope top surface of grout to drain water away from post, maximum one percent slope.

5. Space posts uniformly 8 feet on center or as indicated on the issued for Construction Drawings.

3.04 GATE INSTALLATION

A. Install gates according to manufacturer's written instructions, level, plumb, and secure for full opening without interference. Attach hardware using tamper-resistant or concealed means. Install ground-set items in concrete for anchorage. Adjust hardware for smooth operation and lubricate where necessary.

B. Set gate posts in accordance with spacing shown on the issued for Construction Drawings.

3.05 FIELD QUALITY CONTROL

A. Testing Agency: Where grounding of the fence is required by the Contract, Contractor must engage a qualified testing agency approved by Sound Transit to perform tests and inspections:

1. Grounding-Resistance Tests: Subject completed grounding system to a megger test at each grounding location. Measure grounding resistance not less than 2 full days after last trace of precipitation, without soil having been moistened by any means other than natural drainage or seepage and without chemical treatment or other artificial means of reducing natural grounding resistance. Perform tests by two-point method according to IEEE 81.

2. Excessive Grounding Resistance: If resistance to grounding exceeds specified value, notify Resident Engineer promptly. Include recommendations for reducing grounding resistance and a proposal to accomplish recommended work.

3. Report: Prepare test reports of grounding resistance at each test location certified by a testing agency. Include observations of weather and other phenomena that may affect test results.

3.06 ADJUSTING

A. Gates: Adjust gates to operate smoothly, easily, and quietly, free of binding, warp, excessive deflection, distortion, nonalignment, misplacement, disruption, or malfunction, throughout entire operational range. Confirm that latches and locks engage accurately and securely without forcing or binding.

B. Lubricate hardware and other moving parts.

C. All corrective painting shall be per SSPC PA 1 Shop, Field, and Maintenance Painting of Steel.

3.07 CLOSEOUT ACTIVITIES

A. Demonstration:

1. Contractor must demonstrate gate operation in the presence of Sound Transit's personnel to adjust, operate, and maintain gates.

B. Training:

1. Contractor must provide required training to Sound Transit staff to operate the gate in accordance with the manufacturer's instructions.

3.08 PROTECTION

A. Protect installed products from damage during subsequent construction.

B. Replace fences, gates and weathering steel decorative panels damaged or deteriorated beyond successful repair by finish touchup or similar minor repair procedures at no additional cost to Sound Transit.

3.09 REMOVE AND RESET FENCE

A. Any existing fence that is removed to facilitate construction, but not indicated on the issued Construction Drawing for removal, must be protected, stored, and reinstalled to its original location and condition upon completion of the work at no additional cost to Sound Transit.

B. Remove and dispose of any existing fence and gates that are damaged during construction operations; replace all damaged sections with new fence and gates of equal or better materials, and construct as required by the Contract and AHJ requirements at no additional cost to Sound Transit.

END OF SECTION

SECTION 32 71 00

WETLANDS MITIGATION

NOTE TO DESIGNER:

SECTIONS WITH BRACKETS. E.G., [TEXT] ARE TO BE MODIFIED OR DELETED IF NOT APPLICABLE. ITALICIZED TEXT PROVIDES INSTRUCTION TO THE DESIGNER TO INCLUDE LANGUAGE ON SPECIFIC TOPICS WHEN APPLICABLE. THE INSTRUCTIONS ARE TO BE DELETED WHEN THE SPECIFICATION IS FINALIZED. LANGUAGE NOT IN BRACKETS IS TO BE USED 'AS IS' WITHOUT MODIFICATION OR WITH AN APPROVED SPECIFICATION MODIFICATION REQUEST.

DESIGNER TO DELETE TEXT ABOVE FOR FINAL SECTION

PART 1 - GENERAL

1.01 SUMMARY

A. This Section applies to wetland, stream, and buffer areas identified in the Contract Documents, and provides requirements for clearing and grubbing, topsoil, soil amendments, mulch, seeding, invasive species control, Integrated Pest Management, plantings, habitat FEATURES, LANDSCAPE establishment, AND AS-BUILT DRAWINGS.

1.02 REFERENCES

A. This Section incorporates by reference the latest revisions of the following documents. Where marked with an asterisk, the Contractor must maintain copies on-site during construction and landscape establishment periods:

1. Sound Transit:

a. Design Requirement Manual

2. Washington State Department of Transportation (WSDOT):

a. WSDOT Standard Specifications for Road, Bridge, and Municipal Construction.

b. WSDOT Materials Manual:

1) WSDOT Test Method T 123 Method of Test for Bark Mulch.

c. WSDOT Standard Plans, M21-01.

3. American Joint Committee on Horticultural Nomenclature:

a. Standardized Plant Names (SPN).

4. American Nursery & Landscape Association (ANLA):

a. American Standard for Nursery Stock, ANSI Z-60.1.

5. Revised Code of Washington (RCW):

a. RCW Chapter 17.10 Noxious Weeds – Control Boards.

6. Tree Care Industry Association (TCIA):

a. ANSI A300 Standards.

7. Guideline Specifications for Nursery Tree Quality.

8. Integrated Pest Management:

a. Sound Transit Integrated Pest Management Plan.

9. US Composting Council (USCC) Test Methods of Examination of Composting and Compost (TMECC):

a. USCC TMECC 03.08-A Classification of Inerts.

b. USCC TMECC 04.10 Electrical Conductivity for Compost.

c. USCC TMECC 04.11-A I-5 Slurry pH.

d. USCC TMECC 05.05-B In-Vitro Germination and Root Elongation.

e. USCC TMECC 05.07-A Loss on Ignition Organic Matter Method.

f. USCC TMECC 05.08-B Carbon Dioxide Evolution Rate.

10. Washington Administrative Code (WAC):

11. [For mitigation areas located within Authorities Having Jurisdiction (AHJ)] *[Designer: Update as necessary to include AHJ requirements. Provide a list of AHJ Standards as applicable*.]

B. Definitions:

1. Defective Plant: A plant that has one or more of the following characteristics, but not limited to:

a. Root Bound: A pot-bound plant as evidenced by more than 50 percent of roots circling the based on the container more than one full circumference and/or roots that fill the container.

b. Asymmetrical Roots: Roots that fill the container in a non-uniform and non-symmetrical manner.

c. Dead: Tree and shrub material that is has a broken main leader or is more than 10 percent dead or disfigured must be considered dead. A dry pith in the stems must be considered dead plant material.

d. Disfigured: Plants must be considered disfigured when more that 25 percent of the plant has been broken or removed or when the symmetry, typical habit of growth, or sculptural form has been impaired by the removal of dead wood:

1) Fungal Infection: New plants: any visible evidence of fungal infection based on the presence of visible fungus or any

characteristic symptoms of fungal infection applicable to the specific fungi and plant species. For plants already installed: infected with fungi such that more than 25 percent of the plant has visible fungus or is not thriving.

2) Healthy Plant: A plant that is free of the characteristics listed for a defective plant and possesses the following characteristics:

a) During the growing season – new growth with leaves free of browning, wilting or shriveling.

b) For trees, a single crown (leader) free of deformation caused by wind, pruning, or pests. For trees refer to

c) For trees, a straight trunk free of wounds, lesions, injury from pests. Trunk caliper and taper must be sufficient so that the tree will remain vertical without a stake.

d) For shrubs, growth form must be full and generally symmetrical.

e) Branches must be free of wounds, lesions, and injury from pests.

e. Pest Infection: For new plants: any visible evidence of pests, including presence of pests, presence of eggs or larvae, evidence of being recently eaten or fed on by pests, or evidence of pest species in pot soil or on roots. For installed plants: plants having damage to more than 25 percent of leaves or similar characteristics based on the adverse effects of the specific pest and plant species.

f. Unhealthy: Plants with more than 25 percent of leaves that are dry, dropped off or brown/spotty, drooping, full of holes or lesions, scarred, scorched, gnawed/chewed/removed or otherwise appear diseased or damaged; or bark or stems that are oozing, full of holes, or showing the presence of tunnels (bark beetles), fungus, or galls:

1) Insect Pest: Insect species that harm plants by chewing, the foliage, sucking out plant juices, boring into the roots, stems or leaves, and spreading plant pathogens.

2. Invasive species: Any species listed by the U.S. Department of Agriculture, National Invasive Species Information Center (NISIC), listed in Washington Administrative Code (WAC) 220-640 or listed on the Washington State Noxious Weed Control Board Noxious Weed List (https://www.nwcb.wa.gov/) or applicable County Noxious Weed List. Additionally, any undesirable native or non-native plant that has aggressive and rapid growth that will impact the health of installed native plants at the site (e.g., Northern willowherb [*Epilobium ciliatum*] and Douglas spiraea, [*Spiraea douglasii*] etc.).

3. Landscape Establishment Period (Establishment): The Establishment period is a minimum 365-day period beginning upon the Resident Engineer's written notification of acceptance of all work covered by this specification section. The first-year Establishment period shall be extended an amount equal to any periods where the Contractor does not comply with the Establishment requirements and plan. During the first year of Establishment, the Contractor must meet monthly or at an agreed upon schedule with the Engineer for the purpose of joint inspection of the planting material. The Contractor must correct all unsatisfactory conditions identified by the Engineer within a 10-day period immediately following the

inspection. If plant replacement is required, the Contractor must, within the 10-day period, submit a plan and schedule for the plant procurement and replacement to occur during this establishment period. At the end of the Establishment period, plants that do not show normal growth must be replaced and all staking and guying that remain on the project must be removed unless otherwise allowed by the Engineer.

4. Noxious weeds: Weed Control is mandated by state weed control law, Chapter 17.10 RCW. Assistance and weed lists (Class A, B, C, Nondesignate, and Weeds of concern) are available from the County Noxious Weed Control Programs. RCW 17.10.010(8) defines a Noxious Weed as "…a plant that when established is highly destructive, competitive, or difficult to control by cultural or chemical practices."

5. Pest: A pest is any organism (including plants and animals) that poses health, environmental, economic, or aesthetic risks. Examples of pests include noxious weeds, weeds, weeds of concern, invasive species, fungal pests, and insect pests.

6. Site: Wetlands, streams, and wetland or stream buffers within the project limits.

7. Trees, whips, shrubs, ground covers, cuttings, live stakes, live poles, live branches, rhizomes, tubers, rootstock, and seedlings will in this specification be referred to collectively as "plants" or "plant material". Grass, wildflowers, and other plant materials installed in seed form will in this specification be referred to collectively as "seed".

1.03 COORDINATION

A. Schedule: At a minimum, include the following activities and Critical Inspections on the project schedule for work: plans and submittals, sampling dates, material testing, plant procurement, plant initial inspection, surveys, delivery of plants to each site(s), installation timeframe for each planting zone and mitigation work area and each distinct wetland and buffer area, completion of planting, as-built drawings, landscape establishment period, and landscape establishment period work activities including Contractor inspections, meetings, work activities (watering, mulching, cleaning, weeding, and others as identified in this specification). For sites with multiple areas with differing schedules, the Contractor's schedule must indicate these activities for each work area.

B. Resident Engineer's Observance:

1. The Resident Engineer and Landscape Mitigation Site Supervisor observe the work at the Critical Inspection(s) specified below. The Contractor must request observance at least 24 hours in advance of the time such observance is required Observance is required on the following portions of the work:

a. After wetland and stream boundaries are flagged and staked.

b. After temporary erosion and sediment control is flagged and staked in place as stated elsewhere in the Contract Documents.

c. After flagged locations for the Protection Fencing are placed and after the Protection Fencing has been installed.

d. Before demolition, clearing and grubbing begins as stated elsewhere in the Contract Documents.

e. During preliminary grading, soil preparation, and earthwork as stated elsewhere in the Contract Documents.

f. When rough grading has been completed in mitigation areas.

g. Prior to placement of topsoil, compost, Wood Chip Mulch, Woven and non-Woven Coir Fabrics, Geotextile Material, and Quarry Spalls.

h. When plants, habitat features, and temporary irrigation are staged/marked for installation and before planting occurs.

i. After plants and their associated backfill material have been installed

j. During seed application.

k. When planting and other work under this Section has been completed.

l. Every month during the landscape establishment period.

C. Project Notices: Contractor must provide notice for each work element listed below for each distinct mitigation area:

1. Survey of wetland and wetland buffer boundaries.

2. After temporary erosion and sediment control is in place as stated elsewhere in the Contract Documents.

3. After flagged locations for the Protection Fencing are placed and after the Protection Fencing has been installed

4. After demolition, and before clearing and grubbing begins as stated elsewhere in the Contract Documents to coordinate soil salvage.

5. After completion of control work for invasive species and noxious weeds, but before planting.

6. During preliminary grading, soil preparation, and earthwork as stated elsewhere in the Contract Documents.

7. When rough grading has been completed and elevations have been surveyed and verified in mitigation areas.

8. Prior to placement of each topsoil, salvaged soils, compost, sod chip mulch, woven and non-woven coir fabrics, geotextile material, and quarry spalls.

9. When plants, habitat features, and temporary irrigation are staged/marked for installation and before planting occurs.

10. Prior to plant delivery to site.

11. After plants and their associated backfill material have been installed.

12. During seed application.

13. Completion of planting.

14. Substantial completion.

15. Landscape Establishment Period.

16. Monthly Site Inspections.

17. Preliminary to Final Inspection.

18. Final Inspections.

1.04 SUBMITTALS

A. Contractor experience that meets or exceeds the requirements of Article 1.05, herein.

B. Work Plan for Wetlands and Buffers to be Temporarily Impacted by Construction:

1. Identify all areas of temporary impacts including temporary access routes or other areas. Show areas on a markup of the project drawings and clearly identify all areas to be impacted on the Contract Drawings. Tabulate areas impacted in square feet and verify duration of impacts meet permit requirements.

2. For each impact area, describe reason for temporary impact, nature of impact (e.g., excavation or covering with ground protection mats or other impact), anticipated duration of impact, methods to avoid compacting soils and proposed restoration actions including soil decompaction methods and depths.

3. Include notification plan for any permit deviations.

4. Detailed professional land survey of topography in all wetlands and buffers to be temporarily impacted. Survey data must be sufficiently detailed to restore topography and hydrology of the site to meet permit conditions. This must be submitted and accepted prior to any ground disturbance in these areas.

5. Identify sequencing of soil restoration, and planting.

6. [Dewatering Plan] *[Designer: if work involves dewatering, include requirements for a dewatering plan]*

C. Soil Management Plan (SMP): Plan is to manage and restore soil within all areas described in this section. SMP must include, but is not limited to, the following:

1. Scale drawing of similar scale to project plans showing wetland areas to be protected, access routes through wetlands or buffers, stockpile areas, and other mitigation activity areas.

2. Processes and methods for salvaging topsoil, including removal, haul, stockpiling and protection, special soil handling and storage procedures, and backfill.

3. Excavation within the wetlands, describe methods for and locations of temporarily stockpiling the top 12 inches of wetland soil separately from subsoils and methods for placement of salvaged wetland topsoils back into the wetland as part of restoration.

4. [Excavation of special soils] [*Designer: Add specific requirements for special soils such as peat]*

5. Prepare a table listing volumes of anticipated salvageable topsoil from each area as applicable. Table must include as separate line items soils to be salvaged from each jurisdictional wetland indicated on the drawings that are to be removed, filled, or destroyed. Include soil from all areas of the site; however, exclude areas adjacent to roadways, stormwater drainages, and other areas with potential for soil contamination.

6. Describe proposed locations for temporary access routes and haul roads, include ingress and egress locations, and proposed methods for protection of tree root zones and topsoil including specifics on the types of materials to be used.

7. Describe soil excavation, handling, and haul methods in areas of soft or saturated soils, including use of ground mats and low-ground pressure vehicles.

8. Identify proposed stockpile area(s) on SMP map. Describe stockpile protection measures and temporary erosion and sediment control (TESC) best management practices (BMPs).

9. Describe methods for placement of salvaged soil, including methods for stockpiling the top 12 inches of wetland soils separately and methods to avoid compacting soils during installation of amendments, mulches, and plants.

10. Describe methods for assessing soils for potential decompaction and methods of decompaction for areas of compacted soil.

11. Indicate above activities on project Schedule.

D. Plant Material Procurement and Overall Work Plan:

1. Plan must be approved prior to landscape preconstruction meeting. Plan must include, but is not limited to:

a. Plant Material List.

b. Planting Tabulation must include, but is not limited to, quantities, plant species size, and planting type tabulated by project location and planting zone in the same manner as shown on the Contract Drawings, List names and contact information for growers providing plants and tabulate by supplier and the plant information as noted in the prior sentence.

c. List of proposed plant substitutions including documentation, from a minimum of 3 nurseries, that the specified plants are not available. Include proposed species, size, planting type, and source of proposed replacements.

d. Documentation that plants are being contract grown or deposits have been provided to nurseries to ensure availability of species and container sizes listed on the Plant Material List.

e. Representative photographs of each plant species being held at a nursery 6 months prior to the planting window.

f. Document that plant materials are not stored or grown in standing water unless the plants are hydrophilic species.

2. Planting Implementation Plan:

a. For each planting zone, describe approach and material for soil amendment, mulch installation, plant protection methods, coir netting/matting installation (if applicable), and installation/removal of any associated fencing and signage.

b. Plan must include a copy of the project schedule highlighting planting specific activities, including submittals of as-built drawings and starting and ending dates for the landscape establishment periods.

c. Indicate names and telephone number of the forepersons.

d. Water sources, watering methods, and access for watering.

e. Plant delivery, storage and handling method of plant transportation to each Site that ensures plants are protected from damage.

f. Proposed location for on-site material storage and plant holding to secure plant survival.

g. Protection measures during various seasonal conditions and against erosion, various animal species, and human vandalism.

E. Weed and Pest Control Plan: Provide a plan for all mitigation areas from start of construction through Acceptance. See Weed and Pest Control Plan elsewhere in the Contract Documents.

F. Landscape Establishment Plan: The plan must describe activities necessary to ensure continued health and vigor of planted and seeded areas. Should the plan become unworkable at any time during Establishment, the Contractor must submit a revised plan prior to proceeding with further Work. The Plan must be provided for review and approval a minimum of 60 days prior to starting landscape soil/soil amendment placement and must be implemented at the start of landscape soil/soil amendment through Acceptance. The plan must include, but is not limited to:

1. Site access plan for all activities. The plan must include project specifics including but not limited to private property, utility corridors, recreation trails.

2. Maintenance Instructions: Written instructions on maintenance responsibilities for each mitigation/restoration area, including type and frequency of maintenance activities. Maintenance activities include, but are not limited to, the contents of the Watering Schedule, details on plant replacement and mitigation area repairs, weeding per the Weeding plan in this section, and the proposed end date of the landscape establishment period.

3. Monthly maintenance meeting schedule. Contractor must provide meeting minutes and they must be submitted no later than 14 days after the close of the month. Meeting minutes must include but are not limited to: list of attendees, date, a description of maintenance activities required, and any additional follow up items.

4. Management of Irrigation system or watering plan: Water application methods, points of connection and frequency by month based on site average monthly rainfall, and how watering will be adjusted based on actual rainfall.

5. Mulching Plan: Schedule, sequence, and method for application. At end of establishment period mulch must be restored to original depth.

6. Weeding Plan:

a. General weed management approach and frequency. Ensure that weeds are completely removed at a frequency that prevents weeds from going to seed or competing with installed plants.

b. Management of noxious non-native weeds and undesirable native plants: How and when pesticide is applied.

c. Trash/debris removal frequency.

7. Wildlife Control Management Plan: Provide a Wildlife Management Plan that outlines plant protection against herbivory and other wildlife damages. The plan must protect plants from beavers, ducks, geese, turtles, deer and other species that have the potential to damage the installed plants. This plan must be updated as conditions change.

G. Integrated Pest Management Plan (IPM):

1. The IPM plan must describe and include:

   a. A map identifying location of pests of all types in the mitigation areas including noxious weeds, invasive species, harmful fungi, molds, harmful insects and animals identified in the corridor.

   b. Procedures, tasks, and schedules to be used for monitoring, preventing, and controlling pests. The IPM plan must conform to the guidance listed in Article 1.02.

   c. The IPM plan must address, but is not limited to, providing specific and detailed management approaches and task descriptions for each pest identified in Article 1.08. This must include implementing IPM throughout the duration of the project.

   d. Provide area specific sub-plans if the work differs by site area. Include methods of Weed and Pest Control dates of Weed and Pest Control operations, and disposal methods.

   e. Procedures must provide detailed action plans of how the work will be accomplished without damaging site, safety and protective measures for workers and site, monitoring after treatment to assess success/failure, proposed action plan for escalation of preventive and control actions with schedule be implemented if initial actions are unsuccessful.

   f. Noxious Weed Mandate:

      1) Weed and Pest Control is mandated by state weed control law, Chapter 17.10 RCW. Assistance and weed lists (Class A, B, C, Non-designate, and Weeds of concern) are available from the County Noxious Weed Control Programs. Include current copy of all State, county, and local noxious weed lists:

         a) Weed Lists and IPM Requirements.

         b) Identify and control the Class A, B, or C Weeds as indicated by the AHJ Noxious Weed Control Board and approved Landscape Maintenance Work Plan. Control must occur throughout construction and Establishment.

         c) Sound Transit has zero tolerance for the presence of Class A weeds.

         d) Weeds of Concern and Pest Vegetation: Non-designated weed species of particular concern on this project site must be controlled with ongoing IPM and healthy landscape management techniques.

            i) No cutting of live Knotweed must occur. Ensure has been killed prior to removal.

      2) All removed plant material must be taken away from the site and disposed of appropriately. Plants that appear on the County Noxious Weed Lists must be handled and disposed of according to a noxious weed control plan appropriate to that species.

   g. Pesticide Application:

1) Submit Sound Transit Pesticide Use Request Form (Exhibit A). If application is granted, then transmit. Provide proof of applicator's State of Washington license and that pesticide is registered in the State of Washington. The person applying the pesticide must be licensed.

2) Follow principles of IPM prior to considering pesticide application. Describe rationale for use and specific treatment plan with application rates for effective control. Demonstrate how applicators will comply with all conditions of Ecology's Noxious Weed Control Permit.

3) Include methods for prevention of pesticide drift and runoff beyond the site. Identify any nearby waterbodies or residences that pesticide drift or runoff could impact if not controlled.

4) Demonstrate/provide documentation that applicators are permitted under Ecology's Noxious Weed Control Permit for use of aquatic herbicides.

5) List persons and subcontractors proposed to complete lead management actions and their qualifications. Aquatic herbicides will be used or applied only by certified applicators or persons under the direct supervision of a certified applicator, and only for those uses covered by the certified applicator's license category.

6) Provide records of all pesticide applications a minimum of monthly throughout the duration of the project.

H. Migratory Bird Treaty Act Protection Plan:

1. Prepare a plan addressing the timing of clearing, grubbing, planting or other activities and how that work follows MBTA requirements in this Contract.

I. Planting Completion Summary Report: Within 30 days following completion of planting, prepare a planting completion summary report listing the quantity of each species of plant and planting condition (bareroot vs. container, or plug, etc.) actual installed vs. indicated in the Contract Documents, and the reason for any changes to the quantities, including change order, additions or deletions due to actual restoration of access areas. Provide summary table of quantities by species, planting condition, planting zone consistent with the Drawings. Provide an additional breakdown of planting quantities per the following areas: Area 1, Area 2, etc. In an appendix, include copies of approvals of any plant species substitutions. Include marked up drawings of actual location of habitat features, or other habitat related features such as split rail fences, wetland and wetland buffer signs, and other mitigation related items. Submit updated Planting Completion Summary report within 30 days following the end of the Plant Establishment period.

J. As-built Drawings: [*Designer: Adapt for project specific requirements including permit and AHJ requirements]*

1. Submit As-built Drawings with overall project As-built Drawings, except submit As-Built Drawings for the mitigation areas within 30 days of completion of construction in each area:

a. [The drawings for wetland creation, enhancement, or restoration must be plan view at the same scale as the Contract Landscape Drawings. The Drawings must illustrate surveyed topography (to the nearest 6 inches). Survey must be performed taking shots at 50 feet on-center (OC) around all perimeters, and on a rectangular grid of 50 feet OC each way, plus all

grade breaks, tops and toes of slopes, swales centerlines, stream thalwegs and banks, and habitat features. Provide survey on grid at 25 feet OC each way in areas of sensitive grading Survey final locations and ground elevation of each habitat feature (location and elevation). Survey limits of each planting zone and total area of each zone, including hydroseeded areas.]

b. Provide updated legend and summary totals of the species and size of each plant actually installed versus what was proposed.

K. Transmittals:

1. Material Test Results: Provide test reports at least 14 days, but no greater than 90 days, prior to deliverable of material to site. Samples and tests listed below must be collected specifically for this project; generic test results will not be accepted. Tests must be conducted on the actual materials to be supplied for the project, and after testing the tested materials must be stockpiled and held for use on the project. All material testing submittals include a sample collection form indicating sample collection date and time, person who collected sample, weather, and site conditions at time of sampling, specific sample location, material sampled, and sampling method, laboratory, laboratory accreditation/approval, test result, applicable evaluation criterion, and compliance status vs specification (pass/fail).

a. Soils to be tested: [*Designer: include testing requirements for other amendments or soil types]*

1) Salvaged Soil: Provide report of soil analysis from samples collected at a frequency of 1 sample for every 5,000 cubic yards of salvaged topsoil.

2) Import topsoil.

b. Subgrade

1) [Amendments]

b. Collect samples from sources as 6-point composites using stainless steel implements and mix the 6 samples in a stainless-steel bowl. Collect final sample from mixture. Rinse sampling equipment with water only between samples.

c. Submit samples to soil testing laboratory approved by the Agriculture Laboratory Proficiency (ALP) Program.

d. Test each sample for:

1) Results stating the percentage of organic matter; gradation (express as percent gravel, sand, silt, and clay); cation exchange capacity; sodium absorption ratio; deleterious material; pH; and mineral and plant-nutrient content of planting soil., nitrogen, phosphorus and selenium.

2) Each test report must include recommendations from Certified Agronomist indicating the suitability of soil for plant growth and recommendations for amendments.

e. Compost: Submit supplier's standard compost test report. Collect and test compost at a frequency of one (1) sample for every 1,000 cubic yards supplied. Provide test report per WSDOT Standard Specifications Section

9-14.1 and 9--14.5(8). Collect samples per US Composting Council procedures. Sample results must be compared to the more stringent WSDOT material specifications and the material specifications in Part II.

f. Wood Chip Mulch Analysis Report:

1) Collect and test one 2-pound sample of each type of mulch. Provide to Sound Transit for approval prior to installation.

2) Collect samples from sources as 6-point composites using stainless-steel implements and mix the 6 samples in a stainless-steel bowl. Collect final sample from mixture. Rinse sampling equipment with water only between samples.

3) Test mulch for:

a) Gradation with sieves per gradation specification for each applicable mulch material.

b) Percent physical contaminants retained on a No. 4 standard sieve.

c) Wood Chip Mulch Test Results using WSDOT Test Method T123 (Method of Test for Bark Mulch).

d) Ground Dolomitic Lime: Include guaranteed analysis and weight of packaged material.

g. Certifications for Plant Materials and Inspections: Transmit 6 months prior to the beginning of the planting window:

1) Plant material sources and plant label data substantiating that all plants comply with specified requirements.

2) Furnish certificates of inspection as may be required by Federal, State or other authorities indicating that plant material is free of disease and hazardous insects.

3) Provide itemized list of plants for each delivery. Itemized list should contain species, quantity, plant stock type/container size.

2. Product Data and Certifications: Provide prior to landscape preconstruction meeting product literature or cut sheets giving name of product, manufacturer's name, and compliance with these Specifications. Provide any final updates 30 days prior to Substantial Completion:

a. Certificates of inspection as required by jurisdictional authorities

b. Manufacturer’s certified analysis for compost.

3. Seed vendor’s certified statement for lawn seed mixture; stating botanical and common name, percentages by weight, and percentages of purity, germination, and weed seed for each grass seed species.

a. Organic Fertilizer: Package label.

b. Organic Tackifier: Package label.

c. Mycorrhizal Inoculant: Package label or product data sheet.

d. Provide a letter certifying that the wood fiber mulch to be used in hydroseed contains less than 250 parts per million of boron, and must be otherwise nontoxic to plant, aquatic, or animal life.

e. All project specific material test results.

4. Sources of Woody Materials and other raw materials for the construction of habitat features shown in the Contract Drawings.

1.05 QUALITY ASSURANCE [*DESIGNER: MODIFY REQUIREMENTS TO MEET COMPLEXITY OF WORK*]

A. [Contractor's Qualifications to Construct Mitigation Sites: Installer must be a specialist in restoring, enhancing, or creating natural wetlands, and installing and planting native landscape materials, with documented experience in constructing natural wetlands of comparable size, scope, and quality. A minimum of 5 years of documented experience and documentation of at least five (5) successful projects of similar type and each being at least 3 acres in size, or similar scope, must be presented. Provide a list of references with names and phone numbers. Firm must have equipment and personnel adequate to perform the Work specified.]

B. [*Designer*: *include requirements to meet site conditions]* [Installer must also have experience working in or adjacent to open water.]

C. Supervision: [The Contractor must provide the services of at least one qualified person who must be present at all times during execution of the work of this Section, and who is in this specification referred to as the Landscape Site Supervisor. That individual, who must direct the work, must be thoroughly familiar with wetland mitigation site grading, types of materials being installed and the proper methods for their installation and establishment. A minimum of 5 years of experience and proof of supervising at least three (3) projects of similar type and of at least 3 acres in size must be submitted for approval.]

D. Qualified Wetland Scientist: The Contractor must provide the services of at least one qualified wetland scientist to implement and direct construction of the project, meet permit conditions, oversee all work and supervise at all Critical Inspections. Wetland scientist must be a Professional Wetland Scientist (PWS) or Wetland Scientist with equivalent level of education and experience. Experience must demonstrate the application of current technical knowledge to problems and programs dealing with wetland resources and activities. The Contractor must demonstrate the wetland scientist has 7 years' experience supervising and implementing similar projects.

E. Restore Vegetation in Areas to Remain: Protect vegetation scheduled to remain, with an emphasis on tree protection. In areas outside the work zones shown on the drawings, restoration of areas damaged during construction must be at the Contractor's expense. Restore all lawn, planting, trees and irrigation in surrounding areas damaged during construction according to accepted horticultural and professional practice and as stated elsewhere in the Contract Documents. Restored areas must be approved by Resident Engineer.

1.06 DELIVER, STORAGE AND HANDLING

A. General Requirements: Refer to product requirements as stated elsewhere in the Contract Documents. Defective and rejected plants and other materials must be removed from the site immediately.

B. Delivery:

1. Furnish seed in unopened containers that show the following information: seed name, lot number, net weight, percentage of purity, germination, Pure Live Seed

(PLS), weed seed and inert material. Seed that has become wet, moldy, or otherwise damaged will not be accepted. Use seed that conforms to the requirements of the Washington State seed law and, when applicable, the Federal Seed Act, and is “certified” grade or better.

2. Deliver herbicides, fertilizers, mycorrhizal inoculant, and all other non-plant materials to the site in original sealed, labeled, and undamaged containers as applicable, bearing manufacturer’s guaranteed chemical analysis, weight, manufacturer’s name, trademark, and conformance with state law.

3. Deliver Topsoil, Compost, and Mulch to the site with applicable test results dated within 90 days of testing or re-test the material if more than 90 days has elapsed since testing.

4. Deliver plant materials to the jobsite no earlier than 3 calendar days before planting, in accordance with the Planting Implementation Plan . Deliver plants with legible identification labels, as follows: a. Label trees, shrubs, live stakes, forbs, and ground cover plants:

    a. Provide correct botanical plant names and sizes as indicated on the plant list and those otherwise approved.

    b. Deliver plants with a minimum of one legible label per 10 plants of the same species using the botanical name. Labels and the ink must be waterproof.

5. Protect plant material during delivery to prevent damage to root ball, trunks, and stems or desiccation of leaves. During shipping, plants must be packed to provide protection against climate extremes, breakage, and drying. Proper ventilation and prevention of damage to bark, branches, and root systems must be ensured. All plants must be hauled in enclosed or covered trucks to prevent damage from wind.

6. Provide adequate protection so that trunks are not scarred in transport and branches are not broken. Any visible damage to trunk, branches, or foliage can be deemed as unacceptable and be rejected. Covering, if used, must be removed at the time of plant materials inspection at the jobsite.

7. Notify the Resident Engineer a minimum of 5 days in advance of delivery of plant materials.

8. Plants that arrive as defective as defined in Article 1.03 or plants that are the wrong species, types, or sizes, unless the Contractor has obtained approval of a substitution, must be promptly tagged and removed from the site within 24 hours and replaced with plants meeting the specified requirements.

C. Handling: Exercise care in handling, loading, unloading, and storing of plant materials. Plant materials damaged in any way must be discarded and replaced with undamaged materials at the cost of the Contractor. Contractor must not drag plant material or carry plant from stem or other part of the plant while still in the container.

D. Storage:

1. Plant all material within 3 days of being delivered. If planting is delayed more than 3 days after delivery, Contractor must request permission to set plants on the ground and protect by covering root ball with soil, compost or other material. Protect plant material from freezing, sun, drying winds, and mechanical damage. Plants damaged by planting delays must be replaced with new undamaged plants.

2. Water as necessary until planting.

3. Plants stored under temporary conditions are the sole responsibility of the Contractor.

4. Plants temporarily stored are subject to inspection and approval prior to planting. Immediately remove rejected plant material from the Site.

5. Do not remove container-grown stock from containers until planting time.

6. Do not prune plants prior to planting.

7. Do not store chemicals (herbicides or pesticides) within 200 feet of any planting material or waterbody.

8. Protect packaged materials from deterioration during storage.

1.07 RESPONSIBILITY DURING CONSTRUCTION

A. The Contractor shall prepare, install, and ensure adequate and proper care of all seeded and planted areas on the project until all Establishment periods required by the Contract are complete or until Physical Completion of the project, whichever is last.

B. Adequate and proper care shall include, but is not limited to, keeping all plant material in a healthy, growing condition by watering, pruning, and other actions deemed necessary for plant health. This Work shall include keeping the project area free from insect infestation, weeds or unwanted vegetation, litter, and other debris along with retaining the finished grades and mulch in a neat uniform condition.

C. Existing desirable vegetation shall be saved and protected unless removal is required by the Contract or allowed by the Engineer.

D. The Contractor shall have sole responsibility for the maintenance and appearance of the planting areas.

PART 2 - PRODUCTS

2.01 TOPSOIL TYPE A

A. Topsoil Type A must consist of two components, well mixed at the specified ratio:

1. Forty percent (40 percent) by volume Medium Compost. Medium Compost must meet the requirements of Article 2.03, herein.

2. Sixty percent (60 percent) by volume Sandy Loam. The Sandy Loam component must meet the following gradation:

Sieve Size	Percent Passing
3/8 inch	100
1/4 inch	95-100
No.10	85-95
No. 30	60-75
No. 60	50-60
No. 100	10-20
No. 200	0-10

a. Individual sand grains of the Sandy Loam must be visible and felt readily. On squeezing in the hand when dry, it must form a cast that will not only hold its shape when the pressure is released but must withstand careful handling without breaking.

3. Topsoil Type A must have pH range of 5.5 to 7.5 with dolomite lime, sulfur or other amendments, added prior to delivery, as necessary to attain this range.

4. Amend soil in accordance with Certified Agronomist recommendations from indicating the suitability of soil for plant growth and recommendations for amendments.

2.02 MYCORRHIZAL INOCULANT

A. Mycorrhizal inoculant must be a commercially available blend of endo and ecto-mycorrhizae, humic acid, and beneficial bacteria in a granular form able to easily mix with soil amendment or water. Mycorrhizal Inoculant must include the following:

1. Endomycorrhizal fungi, minimum 9 species.

2. Ectomycorrhizal fungi, minimum 7 species.

3. Beneficial Bacteria, minimum 5 strains.

4. Humic Acid.

5. Sea Kelp.

2.03 COMPOST

A. Compost:

1. Compost must be of the size indicated (fine, medium, coarse) and meet the requirements of WSDOT Standard Specifications Section 9-14.5(8).

2. Physical contaminants must not exceed 0.5 percent by weight, and no more than 50 percent by weight of physical contaminants must be retained on a No. 4 sieve.

2.04 PLANT STOCK

A. Plant stock and materials are indicated in the Planting List or Schedule on the Contract Drawings.

B. All plants must be healthy. Defective plants will not be accepted.

C. All plants must be grown from stock native to the Puget Sound region. Provide trees and plants of the varieties, sizes, and quantities indicated. Plant stock and materials must conform to WSDOT Standard Specifications Section 9-14.7, unless specified in this specification.

D. Plant stock brought to the planting site must be plugs, live stakes, bare root or in containers, per the planting schedule on the Contract Drawings. Plants that do not conform to the sizes listed in the ANLA American Standard for Nursery Stock must be rejected. [*Designer: general guidance for plant sizes must be as listed below. Heights and sizes of the proposed plant material can differ if it is an approved substitution. Update per ANLA.]*

1. [5-gallon trees must be a minimum of 24 inches tall.]

2. [2-gallon trees must be a minimum of 18 inches tall.]

3. [1-gallon shrubs must be a minimum of 12 inches tall.]

4. [1-gallon ferns must have a minimum of 6 fronds with a minimum height of 6 inches.]

5. [20 cubic inch container plants must be a minimum of 3 inches tall.]

E. Contractor must explore alternative plant container types that would reduce or eliminate the use of plastic. Potential alternative types to consider are recycled or reused plastic containers, or materials other than plastic. Coordination to return the undamaged plastic containers to the nursery the plants were purchased from is also encouraged. Alternative containers can be used if the plant size specifications for the container sizes listed in the Contract Drawings are not compromised.

F. Should at any time the nursery stock be lost or compromised due to weather or other natural occurrences, notify the Resident Engineer immediately of the need to locate new material.

G. Plant Substitutions: It is highly encouraged that plants be secured through contract grown arrangements with a nursery or nurseries. Plant substitutions will not be permitted unless the Contractor furnishes the Resident Engineer with written evidence from no less than five nurseries that the plants specified are not obtainable. If later additional plants are determined to be needed, the Contractor must follow the above procedure prior to submitting a substitution request. All plant substitutions must be plants that are native to the Puget Sound region, are of the nearest equivalent size, and of a variety having the same essential characteristics. Submit Plant Substitutions as soon as they are known to be needed, and at least 7 working days prior to landscape preconstruction meeting.

H. Source Quality Control:

1. Acceptance of plant material must not be considered as final acceptance. Notify the Resident Engineer not less than 48 hours in advance of delivery of plants from the nursery to allow inspection before delivery. All trees will be inspected at the jobsite before planting. Root condition of plants furnished in containers must be determined by removal of the plant from the container.

2. Plant materials must be properly labeled when delivered to the site and labels must be maintained on all plants until planted.

I. [Live Stakes:] *[Designer delete or modify if live stakes are proposed*]

1. [Cutting stock of appropriate species must be gathered during the dormant period and installed within 7 calendar days of harvest or as authorized by the contracting officer. Cuttings must not be gathered if temperatures are below 32°F (0°C). Species must be verified before the dormant period.]

2. [Cuttings must be a minimum of 24 inches long (as specified in the plant lists) making the bottom cut slanted and below a dormant bud, and the top cut straight, 1/2 to 1 inch above a dormant bud. The diameter of pieces reserved for planting must not be less than 1/2-inch thick.]

3. [Each live stake must have at least 4 buds including at least 2 in the lower 1 foot of the stake.]

2.05 SEED

A. Grasses, legumes, or cover crop seed of the type specified must conform to the standards for "Certified grade seed or better as outlined by the State of Washington Department of Agriculture Rules for Seed Certification." All seed must be clean, delivered in original, unopened packages. Seed must be furnished in standard containers showing the following information:

1. Botanical name of seed.

2. Lot number.

3. Net weight.

4. Percentage of purity.

5. Percentage of germination (in case of legumes percentage of germination to include hard seed).

6. Percentage of weed seed content and inert material clearly marked for each kind of seed in accordance with applicable state and federal law.

B. Upon request, furnish duplicate copies of a statement signed by the vendor certifying that each lot of seed has been tested by a recognized and accredited seed testing laboratory within 6 months before the date of delivery on the worksite. Seed that has become wet, moldy, or otherwise damaged in transit or storage will not be accepted.

C. Seed vendors must have a business license issued by the Washington State Department of Licensing with a "seed dealer" endorsement. The Contractor must transmit copies of the applicable licenses and endorsements.

D. Work must include, but not be limited to purchase, storage, installation, and maintenance of seed throughout the project. All seeding rates within this project are presented assuming 100 percent PLS. Actual seed rates with lower percent PLS are to be adjusted to meet project seed rates at no additional cost.

2.06 SEED MIX ORGANIC AMENDMENT

A. Seed mix organic amendment must be Fine Compost as defined in Article 2.03, in this specification.

2.07 WOOD CHIP MULCH

A. Wood Chip Mulch must be derived from conifer species per WSDOT specification 9-14.5(3). It must not contain additives, supplemental bark (bark from chipping of whole nature trees and shrubs with natural bark is acceptable), coloring agent or dyes, weed seeds, supplemental sawdust (i.e., finely ground wood material obtained separately from and added to the material from chipping of wood), soil or rocks, or other material detrimental to plant life.

B. Physical contaminants must not except 0.25 percent by weight.

C. Wood Chip Mulch when tested must be according to WSDOT Test Method T 123 prior to placement and must meet the following loose volume gradation:

Sieve Size	**Percent Passing**	
	Minimum	**Maximum**
2 inch	95	100
No. 4	0	30

2.08 [HABITAT FEATURES] [*DESIGNER: UPDATE THIS SECTION WITH PROJECT SPECIFIC REQUIREMENTS*]

A. [For the purposes of this Contract, Habitat Features includes those items listed in the following tables. Habitat Features must be installed as shown on the Contract Drawings.]

B. [Preservative-treated logs are not acceptable.]

C. [Upon delivery to the site, Habitat Features must be free of cable, bolts, other hardware, or any other objectionable foreign materials. Habitat Features must be of wood that is sound and free of rot, decay or other damage that could affect their strength or ability to be driven. No split logs will be accepted. Logs must be washed free of soil and other physical contaminants or debris.]

D. [Wetland large woody material (LWM) must meet the following requirements:]

Length	20 to 40 feet
Min. Diameter at Breast Height (DBH)	12 inches
Species	100 percent must be native conifer (Douglas fir, hemlock, cedar, spruce, or accepted equal)
Condition	Solid, no decay; includes a minimum of 8 branches each at least 4 inches in diameter measured 1 foot from the trunk; includes intact root wad.

E. [Log Pole must meet the following requirements:]

Length	20 to 40 feet
Min. DBH	As shown in Contract Drawings
Species	100 percent must be native conifer (Douglas fir, hemlock, cedar, spruce, or accepted equal)
Condition	Solid, no decay; no branches or root wad.

E. [Standing Snags must meet the following requirements:]

Total Length	30 to 40 feet (75 percent of all snags) 7-29 feet (25 percent of all snags)
Min. Diameter, at mid-point	12 inches
Species	All species must be native; at least 50 percent of pieces must be native conifer (Douglas fir, hemlock, cedar, spruce, or accepted equal)
Condition	Solid, no decay; does not include root wad. Min. of 8 main branches.

F. [Slash must meet the following requirements:]

Length	Approximately 10 to 20 feet wide, 10 to 20 feet long, and 3 to 5 feet high.
Branch Diameter range	½ to 10 inches; in each pile, a minimum of 25 percent of the material must be 1- to 2-inch-diameter and a minimum of 25 percent of the material must be 6- to 8-inch-diameter.
Species	At least 75 percent of each pile must consist of native species. At least 50 percent of the native species within each pile must be a coniferous species.
Condition	Fresh, green, no decay
Installation	• Position branches in the pile such that 90-degree angles are avoided. • Burying material within the pile to assist with stability is permitted. • Branch tips or log ends should be directed upward to create perch points. • Piles should be constructed by stacking material and not dumping from a truck/vehicle. • Create openings within the piles to allow animals to move within piles.

2.09 ORGANIC TACKIFIER

A. Organic tackifiers are used as a tie-down for soil, compost, seed, and/or mulch. Organic tackifiers must contain no growth or germination-inhibiting materials and must not reduce infiltration rates. Organic tackifiers must hydrate in water and readily blend with other slurry materials and must conform to the test requirements listed in Section 9-14.4(7) of the WSDOT Standard Specifications.

B. Organic tackifiers must not be applied at temperatures below 50 degrees Fahrenheit nor in wet or rainy weather. A minimum of 4 to 6 hours of curing time or as product use directions dictate (whichever is greater) is required for acceptance of the application.

C. Organic Tackifiers used must be guar-based products. No tackifier products that are Plantago or polymer-based must be used on the Contract. Tackifier must have a MSDS sheet that demonstrates that the product is not harmful to plants, animals, and aquatic life.

2.10 [COIR FABRIC] *[DESIGNER: PROVIDE DETAILS FOR COIR FABRIC THAT IS FREE OF PLASTIC*]

2.11 [OPEN RAIL FENCING AND CRITICAL AREA SIGNAGE]

A. [Open rail fencing and signage must be installed per the Contract Drawings.]

2.12 CERTIFIED WEED-FREE STRAW

A. Straw used for TESC activities within all sensitive areas and their buffers must be Certified Weed-Free as required in WSDOT Standard Specifications Section 9-14.5(1).

2.13 IRRIGATION

A. Irrigation equipment must meet the AHJ Water irrigation system design and performance requirements and standards.

B. Contractor must complete and submit the AHJ irrigation water budget and the water efficient irrigation system design certification.

PART 3 - EXECUTION

3.01 EXAMINATION

A. Construct all mitigation sites that are to be owned or maintained by jurisdictions other than Sound Transit to the applicable requirements of the jurisdictional agency's standard drawings and specifications. The Contractor is responsible for obtaining all such standards and for compliance with such standards as applicable.

B. Surveys

1. All survey work must be completed by Professional Land Surveyor.

2. The Contractor must mark and re-survey points and elevations for each wetland's boundaries. Ensure those survey points are available for wetland grading reestablishment. Restore to those grades as soon as feasible after guideway construction has passed each wetland location.

3. When completing survey, Contractor must stake the boundaries of each applicable jurisdictional wetland at intervals sufficient to accurately capture boundaries and that will be visible through the end of landscape establishment. Stakes must be good quality wood stakes, minimum of 1"x2"x36",well driven into the ground. Tie poly flagging on each stake. If staked locations occur in dense foliage or blackberries or similar hard to access areas, cut vegetation (outside the wetland area) sufficient to establish a trail for access by the Resident Engineer.

4. For any wetland and wetland buffers identified on the drawings that will be temporarily disturbed by construction activities (including access), prior to beginning construction, the Contractor must complete a survey of existing topography and natural features.

5. Coordinate with Resident Engineer to confirm readiness for survey based on acceptance of work plan. Within 7 days thereafter, Resident Engineer will have renewed wetland as needed and will notify Contractor of readiness for survey. Contractor's survey must be performed taking shots at 50 feet OC around all flagged wetland and buffers that will be temporarily impacted by construction perimeters, and on a rectangular grid of 50 feet OC each way, plus all grade breaks, tops and toes of slopes, swales and channel centerlines, stream thalwegs

and banks, large boulders, existing large wood structures, existing major infrastructure (i.e., culverts, manholes and catch basins, power poles, etc.) and other features. Provide survey on grid at 25 feet OC each way in areas of sensitive grading. Survey final locations and ground elevation of each installed plant and habitat feature (location and elevation). Survey limits of hydroseeded area and provide total area. Survey limits of each planting zone and total area of each zone.

6. Drawings must be plan view at the same scale as the Contract Landscape Drawings. The Drawings must illustrate surveyed topography (to the nearest 6 inches).

3.02 PREPARATION

A. Plant Quantities:

1. The Contractor must maintain a running tabulation of any additional plants of each species needed for restoration of work access areas and other areas as applicable, and also any proposed deducts from the total quantity of each species of plant, relative to the quantity of each species of plant list on the Drawings. The Contractor must submit this tabulation monthly.

2. The Contractor must maintain orders for quantities of plants of each species consistent with the running tabulation.

B. Clearing and Grubbing:

1. Mark the limits of clearing and grubbing as indicated on drawings, including area of proposed soil salvage and areas proposed for treatment/control for invasive species or noxious weeds. Markings must be by wood stakes (minimum 1inch x 2-inch x 36-inch with flags, stakes must be labeled as to purpose and location).

2. When invasive species or noxious weeds are present in a planting area: [*Designer: update to project specific requirements*]

a. Treat and control invasive species and noxious weeds before any plants are installed.

b. [Excavate soil and vegetation and dispose of the material off-site per the IPM plan.]

c. Remove invasive species and noxious weed using approved methodologies before salvaging topsoil. Resident Engineer must approve treated areas before soil excavation.

3. Salvage of Topsoil and Re-use: *[Designer: determine if salvage soil is appropriate*]

a. [Use of salvaged topsoil must take precedence over using imported topsoil. Topsoil (here defined as the upper 12 inches of soil in existing natural vegetated areas excluding roadsides, stormwater ditches, agricultural fields, and other areas known or suspected to have contamination or debris) must be cleared and grubbed, and then excavated and stockpiled]

b. Wetland soil must be stockpiled in windrows that are no more than 6 feet in width and 6 feet in height with a side slope of 1:1 to allow moisture and air into the piles. Stockpile salvaged topsoil in windrows not exceeding x ft x x ft. Salvaged topsoils must be segregated into separate stockpiles based on source ecology, specifically grassland, forest, jurisdictional wetlands as indicated on the drawings, or estuarine environments. Place

stockpiles on visqueen or native ground as indicated on the drawings. Do not place stockpiles in areas of noxious weeds or in gravel areas. Implement TESC BMPs to protect stockpiled soil, except covering with plastic sheeting must not be allowed for more than 48 hours in each week. Obtain approval from Resident Engineer of any seed mix to be used for temporary stabilization prior to seeding.

c. When removing stockpiles, avoid mixing stockpiled soils with underlying materials.

d. Soils salvaged from wetland and buffer areas and stockpile for on-site re-use must be stockpiled so that materials originating from each designed jurisdictional wetland or buffer area is returned to its respective source area. Maintain signage on all stockpiles stating the source of the material. Immediately upon stockpile creation prepare a sketch of the stockpile and take photos from generally north, southeast, and west that show the stockpile and sufficient landmarks to identify the pile from adjacent similar piles at a later date. Submit stockpile information to Resident Engineer within 2 days of stockpile creation. If during topsoil restoration, additional imported topsoil is needed, provide suitable clean topsoil of the same textural classification as the salvaged topsoil. Provide memorandum from a geologist or geotechnical engineer attesting the soil classification of the salvaged soil and the proposed import topsoil. Import topsoil must meet the requirements of Topsoil Type A unless in the opinion of the Contractor's geologist or geotechnical engineer Topsoil Type A is not sufficiently similar to the salvaged soil. In such event, the Contractor must consult with the Resident Engineer to determine appropriate specifications for an alternative topsoil.

C. Preparation of Subgrades:

1. Work soil only during suitable weather conditions. Do not disc, rototill, or work soil when ground is frozen, excessively wet, excessively dry (less than 40 percent moisture content), or in otherwise unsatisfactory condition. Examples of potentially hazardous weather conditions include hail, freezing temperatures, temperatures above 90 degrees, severe wind (velocities exceeding 30 miles per hour), and severe rain.

2. Temporarily disturbed areas to receive plant material must be cleared, grubbed, cultivated, and graded before planting. Prepare planting areas so that they are weed and debris-free at the time of planting.

3. The Contractor is responsible for conducting a detailed site survey, including spot elevations, of wetland and stream boundaries and trail slope and elevations before and after construction.

4. During establishment of the sub-grade for a planting area or stream buffer, the Work must be performed in accordance with earth moving and dewatering requirements as stated elsewhere in the Contract Documents. The Contractor must maintain all excavations and embankments in a well-drained condition at all times.

5. The elevation of the subgrade must take into account the requirements, if any, for adding and incorporating material into the natural soil, including the required quantities of Topsoil Type A, and Wood Chip Mulch. For specific mitigation sites' additional requirements see Appendix A.

6. Track-walk slopes steeper than 3:1.

7. Topsoil must be placed loose in lifts not exceeding 8 inches in thickness and rolled with topsoil roller. Topsoil compaction must not exceed 87 percent of maximum dry density as determined by test method in ASTM D1557- Standard Test Methods for Laboratory Compaction Characteristics of Soil Using Modified Effort. Over-compacted soils must be decompacted.

8. *[Designer: Consider what may be required to restore wetland criteria and meet hydrology to restore wetlands*]

9. See Article 3.02(D) below for compaction testing requirements.

D. Planting Area Preparation:

1. Rocks, clods, debris, and construction surface materials that appear on the surface and do not pass through a one-inch sieve must be removed. Heaved, settled, or eroded areas must be restored by excavating, addition of topsoil, filling, finished grading, and rolling as required. All rocks that are within clearing and grubbing areas, including rock material placed as part of construction activities, must be removed from the project site.

   a. For wetlands within the track impact area, all fill material placed during construction must be removed and the wetlands and their buffers must achieve 80 percent relative soil maximum dry density. Decompaction must occur if soils do not meet this requirement.

2. Site must be weed-free prior to soil placement, planting, or Wood Chip Mulch placement.

3. Litter Removal: Remove all litter, at a minimum, to provide a clean appearance at the completion of plant installations and at the time of landscape establishment inspections. Notify the Resident Engineer on the same day that litter pickup has been completed.

4. In other non-wetland temporarily disturbed areas, preparation of subgrades must follow the criteria as stated elsewhere in the Contract Documents.

3.03 INSTALLATION

A. Finished Grading:

1. Finished grades of planting soil in landscaped areas must be 4½ inches below the top of adjacent pavement, curbs or headers to allow for 4 inches of Wood Chip Mulch as top dressing unless indicated otherwise on the Contract Drawings. Finished grade of planting soil must be 4½ inches below the top of pull and utility boxes or utility structures. Pull and utility boxes must be adjusted by raising or lowering to conform to grading requirements in landscaped areas. For seeded areas, finished grade of planting soil must be 1 inch below the top of adjacent pavement and structures.

2. Grades not otherwise indicated must be uniform levels or slopes between points where elevations are given, or between points established by walks, paving, curbs or catch basins. Finished grades must have no erosion scars.

3. Finished grades must match the grades shown on the Contract Drawings within one-tenth (0.10) of a foot. [*Designer: Update to be consistent with contract drawings*]

4. Tops, toes, and transitions of all slopes must be rounded to produce a gradual and natural-appearing transition between relatively level areas and slopes.

5. Protect all areas against compaction by construction equipment using steel plates, a 6-inch depth of wood chip mulch, or other approved means. Existing and new compacted areas must be eliminated by loosening and aerating the soil with a chisel or ripper shank pulled to just below the depth of compaction when the soil is dry. Check for compaction using a penetrometer or steel bar that can be inserted into the soil to a depth of 2 feet using 100 pounds per square inch (psi) pressure. Compaction depths should be checked before ripping so as not to needlessly disturb soil. Loosening and aerating must occur parallel with the contours.

6. Immediately after finished grading and before seeding, place and maintain a minimum 2 foot-wide by 1-foot-high berm of Topsoil Type A, Medium Compost, or Compost Sock along the property line where it intersects remaining asphalt pavement to act as an energy dissipater and filter strip for stormwater draining into the site from any pavement.

7. Final condition of the restored wetland must match the hydrologic conditions and indicators of a of the original wetland.

B. Layout of Planting

1. The boundaries of planting areas must be staked in the field using labeled wood stakes (1inch x 2-inch x 36-inch minimum, well driven into the ground, with poly flagging, and labels identifying the planting zone and area). These boundaries must remain through the end of Landscape Establishment.

2. The Contractor must locate trees first, then place the other vegetation starting from the perimeter of the planting zone and progressing to the center so that odd dimensions are adjusted at the centers of planting zones as shown in the Contract Drawings.

3. Tree locations shown on the Contract Drawings must be considered approximate, unless shown with stationing and distance. Trees must be adjusted in location to clear all overhead lines and structures.

C. Planting:

1. Schedule [*Designer: Update for location and growing season*]:

a. [Trees and shrubs must be planted during (dates).]

b. [Live stakes must be planted during (dates).]

c. [Emergent plantings must be planted during (dates).]

d. [Seeding must be completed during (dates).]

2. General:

a. Plants brought to the planting site must be in the containers they have been grown in for the last 6 months. Species and sizes must match per the planting schedule on the Contract Drawings or in the Contract Documents for the planting material. Plants must not be planted during freezing weather, when the ground is frozen, or during excessively hot or wet conditions. Plants must not be placed in areas that are below finished grade.

b. Where subsurface drainage is required in the Contract Drawings or Contract Documents, the subsurface drainage installation must be fully complete before planting and backfill.

c. Plants supplied in containers must be kept moist at all times and must be removed from the container in a manner that prevents damage to the root system. The plants must not be removed from the container by pulling on the stem. The Resident Engineer may remove containerized plants from the container for inspection.

d. All circling roots must be cut and straightened to ensure correct directional growth after planting. The entire root ball be split from the bottom for a depth equal to half the container depth to expose root ends to the soil in the planting hole. In their final position, containerized plants must have the root flare even with the tamped soil surface. Installation must be per Contract Drawings.

e. All rootballs and backfill soil must be inoculated with mycorrhizal inoculum during planting. Rate of inoculation must be as recommended by the Manufacturer.

f. When installing plant materials, establish a minimum number of “foot trails” from the upland perimeter of the site into the site in order to minimize disturbance of seeded area during plant installation. “Foot trails” that are in soft and/or wet conditions must use wood chip mulch as needed to minimize soil disturbance. All seeded areas disturbed while installing plants must be remulched and reseeded.

3. Trees in containers that are 2-gallon and greater:

a. Backfill operations, watering, and mulching must be as described for container plants per the Contract Drawings.

b. Backfill must be carefully compacted by water settling. Under no circumstances must water-saturated soil be used for backfill. Upon completion of backfilling, the Contractor must build a 3-inch-high, soil berm around the base of the tree per the Contract Drawings. Water must be applied at a rate of 20 gallons per tree with a Vitamin B-1 solution mixed according to manufacturer’s written instructions. If settling occurs, the Contractor must add enough soil to cover the roots but must not rework the soil. Four inches of Wood Chip Mulch must then be added to top dress the entire tree pit including the watering ring, with the mulch depth tapered to prevent contact at the trunk. Installation details must follow the information within the Contract Drawings.

c. Balled and burlapped trees must not be used.

4. Shrubs and Groundcovers:

a. Planting holes for containerized shrubs and groundcover plants must be excavated as shown in the Contract Drawings. Dry backfill soil must be firmly compacted and bermed around the root system to form a watering ring for each plant. Water must be applied at a rate of 10 gallons per plant with vitamin B-1 solution. Mulch must be added to a 4-inch minimum depth unless otherwise directed in the Contract Drawings.

b. Balled and burlapped shrubs must not be used.

5. Live Stakes:

a. Cuttings must be protected from sun, wind, freezing, drying or injury before and during planting. Cuttings must be stored upright in water immediately after harvesting up until they are installed. Stored material must be

examined frequently for signs of disease and planted before dormant bud development.

b. For cuttings, prepare a pilot hole into the soil with rebar or planting bar (slightly smaller diameter than cutting) if cutting cannot be easily pushed into the ground by hand. Cuttings must be inserted, angled end down below ground leaving a minimum of one-third above ground and a minimum of one to two dormant buds above ground.

6. Emergents:

a. Emergent plants must be planted in clumps of three plants with individual plants installed 1-foot on center within each clump as shown in the Contract Drawings.

D. Wood Chip Mulch:

1. Wood Chip Mulch must be applied at the depths shown in the Contract Drawings and at all planting areas above the high-water line in plant zones and non-seeded areas. Wood Chip Mulch must be kept away from stems and trunks of plants and must be kept off foliage.

3.04 FIELD QUALITY CONTROL

A. Environmental Protections:

1. ESA and State Listed Species Protection Plan:

a. Implement ESA and State Listed Species Protection Plan.

2. Where Temporary access roads are placed within critical root zones, wetlands, and buffers but are not explicitly shown and specified on the Contract Drawings, they must be contractor designed. Acceptable methods must be appropriate for the size of equipment, frequency of use, and condition of the subgrade. The Contractor must make its own determination of requirements for temporary hauls roads in sensitive areas. The contractor must repair and renew materials when they begin to exhibit signs of deficiency as evidenced by subgrade deterioration, pumping of soils in or adjacent to access roads, settlement, liquification, or other adverse impact. After the second instance of renewal, the Contractor must upgrade the haul road to a more protective design. All materials used to construct temporary access roads must be removed by the date of Substantial Completion unless approved to remain in place during the establishment period. All materials used to construct temporary access roads must be removed prior to the Final Inspection.

3. Lighting Restrictions:

a. Construction lighting, if used, must be directed away from open water.

b. Hoods or shields will be placed on lights, where needed, to minimize backlight or dispersed light cast toward the water's surface.

4. Planting:

a. Planting must not be performed during weather conditions that may adversely affect landscape materials, plants, and planting conditions. Examples of potentially hazardous weather conditions include hail, freezing temperatures, temperatures above 90 degrees, severe wind (velocities exceeding 30 miles per hour), and severe rain.

b. Confine work to designated areas. Do not disturb existing vegetation identified in the Landscape Protection Plan in accordance with temporary tree and plant protection requirements as stated elsewhere in the Contract Documents. Do not permit vehicular traffic or materials storage under or around the protected areas.

c. Comply with temporary tree and plant protection requirements as stated elsewhere in the Contract Documents.

5. [Demolition of groundwater monitoring wells and piezometers] [*Designer: Coordinate with broader project team to verify this this is covered elsewhere or not and expand this section if needed]*

a. [Demolition of groundwater monitoring wells and piezometers must be completed in accordance with requirements of WAC 173-160 Minimum Standards for Construction And Maintenance Of Wells. Remove and dispose of well monument off-site.]

3.05 CLEANING

A. Decontaminate personnel boots, clothing, and tools, and any equipment before exiting each specific ISC management zone. Provide decontamination equipment as required for each type of invasive species in the zone. At a minimum, personnel clothing, boots and equipment must be dry brushed and hand inspected and picked clean to remove materials and soil residuals. Contain all decontamination material including soil in trash bags and dispose of off-site. Prevent dispersal of decontamination material during windy period. If dry brushing in not sufficient or other protocol is required for a specific species, provide equipment as required. If pressure washing is required for cleaning equipment, pressure wash equipment in area where wash water can be collected and disposed of to sanitary sewer system or other appropriate disposal method than prevents the material from re-entering the environment:

1. [Boats must be cleaned of regulated aquatic weeds (including in bilges) before entering or leaving the site.]

2. Follow requirements for invasive species control and management outlined in project permits, specifically the Hydraulic Project Approval.

3.06 CULTIVATION AND CLEANUP

A. Upon completion of planting, all excess material must be removed and disposed of off the Contract Site. Planting areas must be brought to a uniform grade flush with walks, curbs, pavements, and driveways.

B. Comply with the cleaning and waste management requirements as stated elsewhere in the Contract Documents.

C. Neatly dress and finish all landscaped areas.

D. Broom-clean all pavements.

E. Any exposed soils resulting from weeding or other soil disturbance must be stabilized with a minimum of 4 inches of mulch and/or appropriate seed mixture for site conditions.

3.07 MITIGATION SITE SEEDING

A. The Contractor must notify the Resident Engineer at least 24 hours in advance of seeding operation. Seeding application must occur between March 1 and May 15, and between September 1 and October 1. Seeding outside of these windows is allowed only if approved

by the Resident Engineer based on weather conditions or irrigation availability. Seed procedures must be per WSDOT Standard Specifications Section 8-01.3(2).

B. Hydroseeding must not be done during windy weather or when the ground is frozen or excessively wet. Seed must be sown by one or both of the following methods:

1. An accepted hydroseeder that utilizes water as the carrying agent and maintains continuous agitation through paddle blades. It must have an operating capacity sufficient to agitate, suspend, and mix into a homogeneous slurry the specified amount of seed, mulch, hydroseed mix organic amendment, tackifier and water or other material. Distribution and discharge lines must be large enough to prevent stoppage and must be equipped with a set of hydraulic discharge spray nozzles that provide a uniform distribution of the slurry.

2. Accepted hand seeders. Areas in which the above methods are impractical may be seeded by hand methods that evenly distribute seed.

C. Seed installation must proceed through the following sequence of steps:

1. Soil must be properly graded and amended and accepted by the Resident Engineer to receive seed.

2. Seed must be applied as one component of a hydroseeding operation. All hydroseeding must conform to TESC requirements as stated elsewhere in the Contract Documents.

3. The following rates of application of hydroseed materials must be used on the site:

a. [Provide completed reference for seed mix]

b. Hydroseed Mix Organic Amendment: 1300 pounds per acre.

c. Organic Tackifier: 100 pounds per acre.

4. If hydroseed is used, the Contractor must apply seed as a first pass, and then apply mulch, tackifier, and hydroseed mix organic amendment as a second pass over the seed.

5. If hand seeding is used, Hydroseed Mix Organic Amendment must be applied at the rate of 30 pounds per 1000 square feet.

D. Seeded areas must have a relatively uniform stand of grass with no bare spots over 12 square inches at the time of provisional acceptance. Reseed bare spots at the original rate and fertilize with 10-20-20 at the rate of 20 pounds per 1000 square feet of blended materials. All areas failing to vigorously establish within 90 days after germination or one growing season (whichever is longer), for any reason whatsoever, must be redone at the Contractor's expense.

3.08 INTEGRATED PEST MANAGEMENT

A. General:

1. Implement the approved IPM. Monthly or more frequently if needed, update the IPM plan to address new issues and changing site conditions. Include updated lists of noxious weeds when lists are revised.

2. Comply with AHJ IPM and Pesticide Applications Requirements; see Appendix A.[*Designer: Add AHJ specific requirements*]

3. If, after implementing non-chemical means of control it is determined that pesticides, herbicides, insecticides, and fungicides are necessary, update the IPM Plan by adding pest/chemical specific supplements signed by a licensed Commercial Pest Control Consultant.

4. Submit revised plan to Resident Engineer for approval. Resident Engineer must review and approve all IPM areas and activities.

B. IPM Implementation:

1. Monitoring:

a. The Contractor must visually inspect all landscape zones monthly, or as otherwise approved, to identify potential pest problems. Complete monthly inspections at a minimum, and weekly inspections during times of changing conditions or evaluating actions.

b. Complete monthly site inspections and submit written reports of inspections to Resident Engineer within 7 days following the inspection. Reports must list and describe Contractor's monitoring, prevention, and control activities during the prior period (e.g., "applied wood chip mulch", "mechanically pulled weeds", "adjusted watering"). Reports must list all pests identified to data and current status of site for each pest, including specific areas where they are present (more detailed that project areas indicated on the Contract Drawings). Reports must include description of controls implemented.

2. Prevention:

a. Prevention will follow nonchemical IPM control techniques outlined in the County's Best Management Practices, Alerts, and other documents posted on the Noxious Weed websites.

3. Control:

a. Non-chemical Methods:

1) Control will follow nonchemical IPM control techniques outlined in the County's Best Management Practices, Alerts, and other documents posted on the Noxious Weed websites. Pesticide applications can only be considered as a last resort when non-chemical methods have proved ineffective.

2) Provide early action before infestation occurs.

3) All removed plant material must be taken away from the site and disposed of appropriately. Plants that appear on the County Noxious Weed Lists must be handled and disposed of according to a noxious weed control plan appropriate to that species.

b. Methods Including Pesticide Application:

1) General:

a) Pesticides: Pesticides include all herbicides, insecticides, fungicides, and various other substances used to control pests and weeds. All pesticide applications must be preceded by monitoring and positive pest identification.

Submit these findings to the Resident Engineer prior to any pesticide application.

b) Integrated Pest Management Plan (IPM Plan): Prepare a Weed and Pest Control plan signed by a licensed Commercial Pest Control Consultant when chemicals are proposed.

c) Combination Products: Under no circumstances will combination products be allowed (such as “weed and feed”, weed control plus fertilizer, or insect control plus fertilizer).

d) Blanket Applications: Under no circumstances will regularly scheduled calendar-based or “blanket” applications of pesticides be allowed without prior approval.

e) Pre-emergent and residual herbicides are not allowed.

f) Application Approval: If Contractor determines that applications may be needed, fill out Sound Transit’s Pesticide Use Request Form (Exhibit A). Pesticide use must be reviewed and approved before application.

g) Provide product recommendation and information on health and environmental hazard of that product. King County Pesticide Tier Tables and “Grow Smart Grow Safe” may be helpful in locating this information:

h) Weather: All pesticides must be EPA-approved and applied during dry weather by a licensed Washington State Pesticide Applicator (WSPA) or Operator in accordance with the label directions. All applications must be posted in accordance with WSDA regulations for 24 hours after application. All chemicals used must have a MSDS filed with Sound Transit.

i) Appropriate Pesticides: Verify that pesticides are appropriate for use with the respective plant materials. Contractor is responsible for damages incurred as a result of applications and must repair or replace such damage.

j) Aquatic herbicides will be used or applied only by certified applicators or persons under the direct supervision of a certified applicator, and only for those uses covered by the certified applicator's license category. Applicators must be permitted under Ecology's Noxious Weed Control Permit. Applicators must comply with all conditions of the Noxious Weed Control Permit.

k) Notification: Notify the Resident Engineer or designee a minimum of 48 hours prior to all pesticide applications.

l) Regularly monitor all plant material and immediately notify Resident Engineer of any need for such control. Contractor responsible for damage to plant material incurred as a result of correctable disease and insect

problems. Replace such damaged plant material as part of the Work.

3.09 MAINTENANCE AND LANDSCAPE ESTABLISHMENT

A. Maintain plant materials from the time of planting and throughout the full duration of the Landscape Establishment period. Trees, shrubs, emergent vegetation, and ground cover must be maintained by regular watering, cultivating, and weeding. One hundred (100) percent of the plants must be found healthy and vigorous at the end of the landscape establishment period.

B. Complete monthly site inspections and submit written reports of inspections within 7 days following the inspection. Submit reports to Resident Engineer. Reports must list and describe Contractor's site activities and maintenance completed during the prior period, including inspections of the work for conformance to contract requirements, and corrective actions completed. Reports must include monitoring and reported for the IPM plan. Report to include list of incidents related to safety, site security, severe weather and flooding and other unusual nature events, site damage and repair work, evidence of predation and infestation and treatments employed, and other significant or relevant events or occurrences.

C. Should the Resident Engineer determine at any time that the Contractor is not providing adequate and proper care of plant material or is performing substandard landscape establishment Work including, but not limited to weed control, the Resident Engineer will order the Contractor in writing to correct and remedy such unsatisfactory Work or practices. The Contractor must make the necessary corrections at the Contractor's expense within a five-day period immediately following receipt of such notice The landscape establishment period will be put on hold until corrective action is taken, and work accepted by the Resident Engineer. Notice will be made in writing to the Contractor or the Contractor's representative following inspection of the Contract Site. Plant material listed as defective, must be removed, disposed of, and replaced by the Contractor according to a schedule set by the Resident Engineer. The Resident Engineer must be the leading authority for plant material acceptance at any time during the course of this Contract.

D. Maintenance:

1. Maintenance must include:

a. Site maintenance:

1) Maintenance of fencing.

2) Removal of litter and debris.

3) Removal of leaf litter.

4) Repair of vandalism.

5) Notifying Resident Engineer of signs of trespass, dumping, hazards such as drug paraphernalia, and homeless encampments observed.

6) General cleanup: A general cleanup must be completed by the Contractor after any work performed during the landscape establishment period. Dispose of waste off-site.

b. Plant Maintenance including:

1) Watering, cultivating, weeding, mulching, repair of stakes, and as maintenance was required.

2) Protection of plants from animals including beaver, rodents, deer, and other animals.

3) Treatment for fungus, diseases, and insects.

4) Removal and control of invasive species.

5) Removal, treatment, and control of noxious weeds.

E. Watering:

1. All plants must be watered to maintain the plants in a healthy, thriving condition. Each watering must be of such quantity as to provide optimum growing conditions.

2. The Contractor must be responsible for the watering patterns, quantity, and timing considering seasonal and day-to-day weather factors.

3. Watering must include a minimum of one inch of water each week between May 1 and October 15.

4. [*Designer: Include watering requirements for seed plants, wetlands, etc.*]

5. Watering basins, where required, must be kept well formed.

6. The Contractor must be responsible for defining sources of irrigation water, obtaining necessary permits (if needed), transporting water (if needed), and applying water to the site. The Contractor must use potable water. If water restrictions are established, develop watering schedules in consultation with the Resident Engineer.

7. Temporary Irrigation Equipment: Where permanent irrigation is not required by the Contract Documents, Contractor may install temporary irrigation for use during construction and the Establishment Period. Irrigation system components installed as part of the Work must be maintained and operated by the Contractor as part of the landscape establishment Work. The Contractor must obtain all applicable permits and approvals, pay all fees, and comply with applicable codes including requirements for water system connections and backflow prevention. Water must be of drinking water quality. Water must not be obtained from surface water sources. If at the end of Establishment the RE determines any portion of the temporary irrigation is no longer needed, all temporary irrigation equipment and materials must be removed from the site at completion of the Establishment period.

8. All watering application methods must allow for watering without damaging plants or causing erosion or generation of turbid runoff.

F. Mulch: Quarterly, re-apply mulch to all site areas to re-establish the originally specified mulch thickness. Hand dig holes as need to verify mulch depth and demonstrate re-establishment of mulch depth.

G. Weeding and Pest Control:

1. General (any plant species not planted by the Contractor): Remove all weeds at least once per month. Dispose of removed material off-site. Repair any damage caused by weeding activities.

2. Pests and Noxious weeds: Control pests and noxious weeds in accordance with the approved Integrated Pest Management Plan (IPM).

H. Corrective Action:

1. Soil Replacement: The Contractor must be responsible at their own cost for removing and replacing soils, amendments, plants, and other materials brought into the site that are determined to have been a source of chemical contamination in excess of MTCA criteria or are a source of noxious weeds or invasive species that cannot be fully eradicated during the landscape establishment period.

2. Plant Replacement:

a. The Contractor must be responsible for growing or providing enough plants for replacement of plant material at their own cost if identified at any stage of the project.

b. All replacement plants must be of the same species, size, and quality as the plants they replace.

c. Tree and shrub material that has a broken main leader or is more that 25 percent dead or disfigured must be replaced.

d. Tree and shrub material that is stunted, defined as less than two-thirds net foliage volume of typical healthy similar plants of the same species, must be replaced.

e. Tree and shrub material that are “water stressed” must be replaced. Water stress is the condition when plants do not have enough available water in the soil for normal respiration and growth. Symptoms of water stress are: wilted leaves; leaves that have changed from shiny to dull; discolored leaves, buds or flowers; and dry or brittle leaves and stems.

f. Replace unacceptable plants in accordance with the original Specification. Make replacement within 14 days of notification from the Resident Engineer during the periods set out as planting periods. Remove dead plants within 2 days of notification and mark planting plan showing the exact location and date of replaced plants. If plants cannot be replaced within 14 days of notification due to seasonal conditions, replace plants no later than the next succeeding planting season as described in this specification.

3.10 PRELIMINARY TO FINAL INSPECTION

A. At completion of the work of this Section and approximately 30 days before the end of the landscape establishment period, the Contractor shall request a preliminary inspection to determine the condition of the landscaped areas. Refer to Article 1.03.C, herein. Inspection shall be requested a minimum of five (5) working days in advance.

B. The Contractor and Resident Engineer shall be represented at the inspection.

C. Readiness for Preliminary to Final Inspection: The Contractor must, at a minimum, complete the following work to be considered ready for preliminary to final inspection:

1. Repair all rills and eroded areas with topsoil and mulch to specified depths and conditions.

2. All planting must be healthy and free of infestations.

3. All landscaped areas must be free of weeds.

4. Mulch must be at contract depth, raked to a uniform surface and away from plant bases.

5. Debris must be removed from the landscaped area, pavements must be broom clean, and foliage must be washed clean.

6. All plants must be installed in place as indicated and specified.

D. Coordination:

1. Confirm whether animal protection measures such as goose exclusion fencing and wires, herbivore predation protection, and other measures are to be retained or removed prior to Final Inspection.

E. Conditions found unacceptable by the Resident Engineer shall be corrected by the Contractor within a 10-day period immediately following the inspection. After correction, the Contractor shall notify the Resident Engineer for final inspection.

3.11 FINAL INSPECTION

A. Final inspection will be conducted at the end of the landscape establishment period. Submit notice to the Resident Engineer requesting final inspection at least five (5) business days prior to the anticipated date.

B. Readiness for Final Inspection: The Contractor must, at a minimum, complete the following work to be considered ready for final inspection:

1. Wood Chip Mulch must be at contract depth, refreshed as stated elsewhere in the Contract Documents and raked to a uniform surface and away from plant stems or trunks.

2. Thoroughly weed and clean all landscaped areas.

3. Remove site access control fencing.

4. Remove labels and tags from all plants.

5. The temporary irrigation system must be tested at the final inspection (or removed). A final determination of whether the system should remain in place will be determined by the Resident Engineer. Refer to the planting irrigation requirements as stated elsewhere in the Contract Documents.

6. Plants which are dead, unhealthy, or missing, whether by disease, neglect, herbivory, vandalism, or any other reason, must be replaced with the same species and sizes originally specified and following these same specifications for installation, unless a different species is requested.

7. Provide plant replacements within two (2) weeks after final inspection and extend the landscape establishment period for an additional 30 days after replacement planting has been accepted by the Resident Engineer. The Resident Engineer will then repeat the final inspection for the replaced plants at the end of the extended landscape establishment period.

END OF SECTION

EXHIBIT (On Proceeding Pages)

1. Exhibit A: Sound Transit Pesticide Use Request Form. [*Designer: Include most up to date form]*

Date of Request: _____

SOUNDTRANSIT

Sound Transit Pesticide Use Request Form

Requestors Information

Full Name: _____
Last *First* *M.I.*

Phone: ( ) _____ E-mail Address: _____

Company: _____

Address: _____
Street Address

_____
City *State* *ZIP Code*

Certification No: _____ Expiration Date: _____ License No: _____

Treated Site

Date of Proposed Use: _____

Location: _____
(Attach map and provide amount of area to be applied i.e. sq. ft.)

Reason For Use: _____

Targeted Species: _____
(i.e. noxious weed species, insect, fungi, other)

When is the best time to control this weed? : _____

Does this request coincide with the best control time? YES ☐ NO ☐

What control methods* have already been used: _____
(i.e. cutting, mowing, grubbing, etc.)

*Provide documentation of the control methods (hours spent, communications with ST, photos, etc...) and attach to form.

Pesticide Product Information

Trade Name: _____ EPA Registration No: _____

Active Ingredients: _____ Inert ingredients (if listed) include surfactants: _____

Existing Manufacturer: _____ New Manufacturer: _____

SDS Document (attach): _____ SDS Revision Date: _____

Pesticide Label (attach): _____ Material Type: _____
(gas, liquid, powder, solid, etc)

Page 1 of 2 June 2021

Material Use

Is the product on Sound Transit approved list? YES ☐ NO ☐ If NO, submit the SDS for approval

Description of Added Benefits: _____

Temporary Use ☐ Permanent Use ☐

If Temporary, for how long? _____

Quantity to be Used?

Ready to Use ☐ OR Diluted ☐ Proposed Amount: _____

If Diluted, what is the ratio? _____

Applicator's Guide/Manual (as required): _____

*This form is NOT a substitute for Pesticide Applicator Record required by state and federal laws and requirements (chapter 17 21 RCW)

FOR OFFICE USE ONLY

Reviewed: _____ Date: _____

Sound Transit Senior Health & Safety Specialist

☐ Approved* ☐ Restricted Use ☐ Denied

_____ Date: _____

Sound Transit IPM Coordinator

Reason for Denial or Restricted Use:

* Per label instructions.

Page 2 of 2 June 2021

SECTION 33 01 01

MAINTENANCE OF EXISTING UTILITIES

PART 1 - GENERAL

1.01 SUMMARY

A. Section includes:

1. Requirements for maintenance, support, and protection of existing utilities and storm drains as indicated on the plans.

1.02 COORDINATION

A. Coordinate and verify with Utility Design Engineer for all utility as-built drawings before commencing any field work.

B. Field locate existing utilities by contacting “Call before you Dig” at 811 or 1-800-424-5555 in compliance with RCW 19.122.030 – Excavator and facility operator duties before excavation.

For utility owners not covered by this telephone number such as owners of gravity sewer and storm drainage facilities, contact the affected utility owners directly.

1.03 SUBMITTALS

A. Submit:

1. Work Plan for Maintenance of Existing Utilities per submittal procedures as required by the Contract.

2. Schedule of estimated utility shut-downs for each utility affected. Include the date of shut-down and duration.

3. A temporary water or sewer services schematic for coordination with utilities companies.

PART 2 - PRODUCTS (NOT USED)

PART 3 – EXECUTION

3.01 EXAMINATION

A. Ensure underground utilities are marked for identification by the affected utilities companies before performing any excavation or other work close to any underground pipeline conduit, duct, wire, or other structure in compliance with RCW 19.122.030 – Excavator and facility operator duties before excavation.

B. Compare the field located utilities with Sound Transit records/As-built drawings and Contract Documents.

C. Notify the Resident Engineer the discrepancies between field locations and record/As-Built Drawings.

D. Indicate on Contract As-Built Drawings the actual locations and characteristics of all existing utilities identified during the performance of the contract.

E. If underground utilities are damaged in any way, notify the Resident Engineer and affected utilities immediately for corrective action.

1. Contractor is responsible for all damage to existing utilities due to their operation and must bear the cost to repair or replace the damaged utility.

3.02 CONSTRUCTION

A. Do not operate, disconnect, or shut down any part of the existing utilities and services, except by permission of the utility owner.

B. Notify Resident Engineer a minimum of two (2) and a maximum of 10 working days before digging.

C. Notify affected utility owners a minimum of two (2) and a maximum of 10 working days before digging. The names of the utility companies in the area and their respective addresses and telephone numbers are stated in the Contract .

D. Call “Before You Dig” at 811 or 1-800-424-5555 for utility locates a minimum of two (2) and a maximum of 10 business days before digging.

E. Do not remove utilities until shutdown time can be kept to a minimum and communicated with the utility owner.

F. Do not remove an existing utility line or service until the replacement line, crossover, or capping is ready to be performed.

G. Record locations of cuts, caps and utility abandonment on records/As-Built drawing.

3.03 MAINTENANCE

A. Maintain existing utilities not indicated for removal, relocation or abandonment on the Issued for Construction Drawings and protect from damage in accordance with the requirements of the utility owner and applicable codes and regulations.

B. Maintain sewer manholes, water valves, meters, fire hydrants, and utility vaults accessible and keep clear of blockages from equipment, debris or construction material.

C. Existing utilities and services must not be operated, disconnected, or shut down except by permission of Sound Transit, Utility owners, and (if applicable), the authorities having jurisdiction. Submit a schedule of estimated shut-down time, and notify all interested parties, neighbors, utilities, and municipal and county authorities, as required.

D. Record unforeseen existing utilities on the as-built drawings.

E. Provide temporary utility services as required by the Contract.

3.04 PROTECTION

A. Protect existing utilities from damage. Provide shoring, underpinning and structural support for existing utility lines and structures as required to protect and support the utility from damage, movement, and subsidence as may be incurred because of adjacent excavation operations.

B. When existing utility services occupy the same trench space as a new utility, excavate to fully expose such services. Protect such services and work around them during

excavation and new utility installation operations. In the event of conflict with other underground utilities, immediately notify the Resident Engineer.

C. Provide shoring, underpinning, and structural support for existing utility lines and structures that become suspended or otherwise unsupported because of adjacent excavation operations.

3.05 RELOCATION OF EXISTING UTILITIES BY OTHERS

A. Certain utilities will be relocated by the affected utility companies.

END OF SECTION

SECTION 33 05 26

UTILITY IDENTIFICATION

PART 1 - GENERAL

1.01 SUMMARY

A. Section includes:

1. Requirements for the following:

a. Placement of marking tape for newly placed buried utility pipes including lighting, power, and communications.

b. Placement of tracing wire for newly placed non-metallic buried piping.

c. Replacement of marking tape and tracing wire damaged during construction.

d. Marking of standard pipe.

B. Section excludes:

1. Marking tape or tracer wire for sewer mains, storm drain mains or water and sewer service lines.

1.02 REFERENCES

A. This Section incorporates by reference the latest revisions of the following documents:

1. American Public Works Association (APWA):

a. Uniform Color Code

2. Authority Having Jurisdiction (AHJ):

a. Standard plans and specifications

1. Washington State Department of Transportation (WSDOT):

a. Standard Specifications for Road, Bridge and Municipal Construction.

1.03 COORDINATION

A. The Contractor will coordinate with Resident Engineer to schedule a meeting with Utility Owner to discuss requirements for marking tape and/or tracer wire for each underground utility.

1.04 SUBMITTALS

A. Transmit:

1. Manufacturers' product data for each product.

PART 2 - PRODUCTS

2.01 MARKING TAPE

A. Detectable marking tape must meet the AHJ requirements of modified to account for the additional utility line types on the site. Each color must be exclusive to a particular utility type. (Use WSDOT Standards Specifications Section 9-15.18, if not specified in the AHJ conforming specifications.

B. Detectable marking tape for use with non-metallic pipe must be two inches wide. Tape must be suitable for direct burial. Message printed on the tape "CAUTION (insert pipe service name) PIPE BURIED BELOW" with bold letters approximately 1-1/2 inches high. Print the message at maximum interval of two feet.

C. Manufacturers are as follows:

1. Brady Worldwide, Inc.

2. Seton Identification Products

3. Approved equal

2.02 TRACING WIRE

A. Tracer must be 10 AWG solid strand single copper conductor with 30 mil HDPE insulation, rated for 30 volts and direct bury service. UL rated.

B. Insulation color must meet the APWA color code standard for identification of buried utilities.

C. Tracing wire must meet the AHJ requirements.

PART 3 - EXECUTION

3.01 PIPE MARKINGS

A. Ductile Iron and steel pipe markings must include the following, marked continuously down the length:

1. Manufacturer’s name or Trade Mark and Production Date.

2. Nominal Size.

3. Class Pressure Rating.

4. Identification Code.

B. Marking must be legible and must remain legible under normal handling and installation practices.

C. Indent marking may be utilized provided:

1. The marking does not reduce the wall thickness to less than the minimum value for the pipe or tubing.

2. It has been demonstrated that these marks have no effect on the long-term strength of the pipe or tubing.

3. The marks do not provide leakage channels when elastomeric gasket compression fittings are used to make the joints.

D. Mark fittings on the body or hub. Marking must be in accordance with either ASTM D2683, ASTM D3261, AWWA C906 or ASTM F1055, depending on fitting type and the standard that applies.

E. Mark mechanical fittings with size, body material designation code, pressure rating and manufacturer's name or trademark.

3.02 MARKING TAPE

A. Provide a single line of marking tape12 inches below finished surface and parallel to the buried underground utility to be marked and in accordance with AHJ requirements. Spread marking tape flat with message side up before backfilling. Backfilling must be as required by the Contract..

3.03 TRACER WIRE

A. Installation of tracer wire must be in accordance with the AHJ requirements.

END OF SECTION

SECTION 33 11 00

WATER UTILITY DISTRIBUTION PIPING

PART 1 - GENERAL

1.01 SUMMARY

A. Section includes:

1. Requirements for providing water service supply mains, modifications to existing water mains, and services in WSDOT and AHJ Right-of-Way as indicated.

a. Construct all water utility distribution piping in accordance with the jurisdictional requirements. Refer to the issued for Construction Drawings for ownership designation associated with each element.

1.02 REFERENCES

A. This Section incorporates by reference the latest revisions of the following documents:

1. Washington State Department of Transportation (WSDOT):

a. Standard Specifications for Road, Bridge and Municipal Construction.

b. Standard Plans.

2. Authority Having Jurisdiction (AHJ):

a. Standard plans and specifications.

3. ASTM International (ASTM):

a. ASTM A53/A53M Standard Specification for Pipe, Steel, Black and Hot-

b. Dipped, Zinc-Coated, Welded and Seamless.

c. ASTM A536 Standard Specification for Ductile Iron Castings.

d. ASTM D3261 Standard Specification for Butt Heat Fusion Polyethylene.

e. (PE) Plastic Fittings for Polyethylene (PE) Plastic Pipe and Tubing.

f. ASTM D3350 Specification for Polyethylene Plastics Pipe and Fittings.

4. Materials:

a. ASTM F714 Specification for Polyethylene (PE) Plastic Pipe (DSR-PR):

b. Based on Outside Diameter

c. ASTM F2164 Standard Practice for Field Leak Testing of Polyethylene (PE) pressure Piping Systems Using Hydrostatic Pressure

5. American Water Works Association (AWWA):

a. AWWA M41, Ductile Iron Pipe and Fittings

b. AWWA M44, Distribution Valves: Selection, Installation, Field Testing, and Maintenance

c. AWWA C104, Cement-Mortar Lining for Ductile-Iron Pipe and Fittings for Water

d. AWWA C105/A21.5-99 American National Standard for Polyethylene Encasement for Ductile-Iron Pipe Systems

e. AWWA C110, Ductile-Iron and Gray-Iron Fittings for Water

f. AWWA C111, Rubber-Gasket Joints for Ductile-Iron Pressure Pipe and Fittings

g. AWWA C115, Standard for Flanged Ductile-Iron Pipe with Threaded Flanges

h. AWWA C151, Ductile-Iron Pipe, Centrifugally Cast, for Water

i. AWWA C153, Ductile-Iron Compact Fittings for Water Service

j. AWWA C210 Liquid-Epoxy Coating Systems for the Interior and Exterior of Steel Water Pipelines

k. AWWA C509, Resilient Seated Gate Valves for Water Service

l. AWWA C600-05, Installation of Ductile-Iron Water Mains and Their Appurtenances

m. AWWA C651, Disinfecting Water Mains

n. AWWA C900, Polyvinyl Chloride (PVC) Pressure Pipe and Fabricated

o. Fittings, 4 In. through 12 In. for Water Transmission and Distribution

p. AWWA C905, Polyvinyl Chloride (PVC) Pressure Pipe and Fabricated

q. Fittings, 14 In. through 48 In. for Water Transmission and Distribution

r. AWWA C906 Polyethylene (PE) Pressure Pipe and Fittings, 4 In. (100mm) Through 63

6. National Fire Protection Association (NFPA):

a. NFPA 14 Standard for the Installation of Standpipe and Hose Systems

b. NFPA 24, Standard for the Installation of Private Fire Service Mains and their Appurtenances.

c. NFPA 25 Standard for the Inspection Testing, and Maintenance of Water Based Fire Protection Systems.

7. NSF International/American National Standards Institute (NSF/ANSI)

a. NSF/ANSI 61 Drinking Water System Components – Health Effects

8. American Lifelines Alliance in partnership with ASCE and FEMA

a. Guidelines for the Design of Buried Steel Pipe

1.03 COORDINATION

A. Prior to commencing any work, contractor must provide minimum of 30 days notice to schedule meeting(s) with the Resident Engineer to discuss the work plan and schedule.

B. Submit to the Resident Engineer, for review, a work plan for which encompasses all water utility distribution work both temporary (if required by the Contractor's means and methods) and permanent.

C. The Contractor will coordinate with Resident Engineer to schedule a meeting with Utility Owner and Designer of Record to discuss Contract Plans and work plans.

D. Coordinate new building service connections with building contractor and/or Resident Engineer, the connection point for water and fire service typically 5 feet outside of building.

E. The Contractor will coordinate with Resident Engineer to schedule a meeting with local Fire Department to discuss fire requirements related to the water utility distribution system.

F. The Resident Engineer's review of work plans does not relieve the Contractor of its responsibilities or of any public liability for water utility service disruptions, contamination of water system, or leakage of water.

G. Contractor must obtain required permit(s) for the work from AHJ.

1.04 SUBMITTALS

A. Product Data: Include data on pipe, fittings, and appurtenances including manufacturer's recommendations for pipe installation.

B. Construction sequencing plans for the pipeline construction. Include details for each connection to an existing main including temporary water services and hydrants. The review of this submittal by the Resident Engineer, and AHJ does not relieve the Contractor of his responsibilities to any damage to existing utilities due to their operation in accordance with operation and maintenance of utilities.

C. General: Refer to Operation and Maintenance Data Specifications for submittal requirements and procedures.

D. Record Documents: Show actual locations of piping mains, valves, connections, and depths of burial on the as-built drawings for review.

E. Construction Work Plan: Submit a construction work plan covering work per Quality Assurance/Quality Control Specifications. An approved Construction Work Plan is a precondition for the Readiness Review Meeting.

F. An application to the AHJ to request Availability Certificate prior to connection for new domestic water, irrigation or fire service connections.

G. Temporary Restraints Anchors: Submit drawings and calculations for temporary restraint anchors for cut and caps. A professional civil or structural engineer registered in the State of Washington must sign all temporary restraints anchors.

H. Design temporary restraints on water mains for 300 psi pressure plus a 1.5 safety factor. Anchor size must be based on soil bearing with no allowance for thrust blocking sidewall friction.

I. Contractor's Test Certificates for fire protection elements.

1.05 QUALITY ASSURANCE

A. Regulatory Requirements:

1. Private Property: Comply with the AHJ Fire Department standards for water service piping, appurtenances, installation, and testing.

2. AHJ Right-of-Way: Comply with AHJ standards for water service piping, appurtenances, installation, and testing.

3. WSDOT Right-of-Way: Comply with WSDOT Standards for water service piping appurtenances, installation, and testing.

B. Provide piping materials that have been stamped or marked with the specified testing agency.

C. Comply with Factory Mutual “Approval Guide” or Underwriters Laboratory “Fire Protection Equipment Directory” for fire-service-main products.

D. NFPA Compliance: Comply with NFPA 24 for materials, installations, test, flushing, and valve and hydrant supervision for fire-service-main piping for fire suppression.

1.06 CONNECTION TO EXISTING WATER MAINS WORK PLAN

A. Submit a work plan indicating Contractor work sequence and means and methods for connection to existing water mains or temporary provisions required to maintain service. Both the Resident Engineer and the AHJ must approve the work plan. The work plan must include a description of the scope of work, a schedule for subtasks, a schedule for shutdowns (if required), calculations documenting adequacy of support and thrust restraint. The work plan will also identify if there is work by the utility owner and the plan for notification to affected parties. See utility structures as stated elsewhere in the Contract Documents for related utility work plan requirements.

B. An approved Construction Work Plan is a precondition for the Readiness Review Meeting.

1.07 DELIVERY, STORAGE, AND HANDLING

A. Deliver piping with factory-applied end caps. Maintain end caps through shipping, storage, and handling to prevent pipe-end damage and to prevent entrance of dirt, debris, and moisture.

B. Inspection: Inspect pipe before it is installed. Remove defective products from the Project Site.

1.08 PROJECT CONDITIONS

A. Sequencing and Scheduling: Include sequencing and scheduling information in the Construction Work Plan.

PART 2 - PRODUCTS

2.01 MATERIALS

A. General: Install only new materials for water distribution and transmission. Materials used for temporary Water Main and for temporary service connection purposes may be either new or previously used materials and are subject to the Resident Engineer’s inspection and approval prior to installation. Verify all direct and indirect drinking water system

components which come in contact with potable water have National Sanitation Foundation certification.

B. Water mains 16 inches in diameter and smaller in accordance with WSDOT Specifications Section 7-09.2, and Standards Specifications and Plans of AHJ.

C. Ductile Iron Pipe and Fittings

1. Ductile Iron pipe: Centrifugally cast in 18-feet nominal lengths marked conforming to AWWA C151.

   a. Cement-mortar lining conforming to AWWA C104

   b. Standard Thickness Class 52 and class 53 required for cut grooved pipe.

   c. For non-restrained joints, use rubber gasket, push-on type, or mechanical joints conforming to AWWA C111

2. Fittings for Ductile Iron Pipe: Ductile Iron conforming to AWWA C110, and AWWA C111, or AWWA C153 and cement-mortar lined conforming to AWWA C104.

   a. Use mechanical joint fitting joints except where restrained joint systems are required.

   b. Where restrained joint pipe is required, use threaded flanges by restrained joint adapters no longer than three pipe diameters. Threaded flanges and pipe conforming to AWWA C115. Seal the exterior flange lip overlapping the pipe barrel with bituminous mastic.

   c. The minimum length for sleeves less than or equal to 12 inches in diameter is 12 inches. Provide mechanical joint sleeves.

   d. Join the pipe with a mechanical joint sleeve where ductile iron pipe is to be joined to existing cast iron pipe of the same nominal size and the outside diameter of the existing cast iron pipe varies 0.05 inch or less from the specified outside diameter of the ductile iron pipe being jointed.

   e. Join the pipe with a transition mechanical joint sleeve having a single-piece body where 8 inch or smaller diameter ductile iron pipe is to be joined to existing cast iron pipe of the same nominal size and the outside diameter of the existing cast iron pipe conforms to the 1908 AWWA classifications of A, B, C, D, E, or F.

   f. Hub-by-flange fitting length: conform to AWWA C110 or AWWA C153 and be a single-piece casting. Do not use threaded pipe and flange combinations.

3. Restrained Joints: Boltless design which is flexible after assembly and can be disassembled without special tools, such as TR Flex Restrained Joint Pipe as manufacturer by U.S. Pipe Co. or approved equal. Joint to have a positive metal to metal contact locking system without the use of gripping teeth and the joint restraint system for the pipe must be the same as the joint restraint system for the pipe fittings.

4. Transition reducing and insulating flexible couplings per AHJ Standard Specifications. Cast components must be ductile iron. Center rings and end rings must be ductile iron in accordance with ASTM A536, Grade 65-45-12.

5. Insulating couplings: Insulating couplings and flange kits are required at any point of connection of two dissimilar metallic Material pipes (i.e., ductile iron to cast iron). Requirements per AHJ Standard Specifications

D. Steel Casing

1. Black steel pipe conforming to ASTM A53/A53M. Casing wall thickness must be as listed below, unless noted otherwise in the Contract.

a. 0.250 inch for 14 inches or less in diameter

b. 0.375 inch for casings 14 inches to 24 inches in diameter

c. 0.4375 inch for casings 28 inches in diameter

d. 0.53125 inch for casings 34 inches in diameter

E. PVC Casing: Casings must be PVC conforming to AWWA C900/905 DR18.

F. Service Connections and Service Pipe or Tubing per AHJ Standards Specifications

G. Gate Valves: per AHJ requirements. Resilient seated gate valves per AWWA C509 (2-inches to 12-inches Cast Iron) and AWWA C515 (4-inches to 48-inches Ductile Iron). Valves to have name or mark of the manufacturer, year valve casting was made, size, and working pressure plainly cast in raised and legible letters on the valve body. Valves to be NSF approved. Valves to be stamped with “NSF APPROVED” and, if applicable, “DI”.

H. Valve Boxes Per AHJ Standards Specifications.

I. Concrete Thrust Blocking: Constructed of Class 5 (1-1/2) concrete per AHJ Standards Specifications.

J. Concrete Thrust Blocking: per AHJ requirements. Blocking concrete must have a 30-day compressive strength of not less than 2,500 psi. The mix must contain five (5) sacks of cement per cubic yard and must be of such consistency that the slump is between 1-inch and 5-inches. All concrete must be mechanically mixed. Blocks must be left open for inspection.

K. Fire Hydrants: per AHJ approved materials list.

L. Fire Department Connection:

1. Provide freestanding or flush outlet type Fire Department connections of the siamese type, with two, 2-1/2-inch inlets and 4-inch outlet, located where show on the Drawings and properly connected to the riser pipe.

2. Fire Department connection must be cast iron body and must have a rough brass finish and be complete with aluminum identification plate, caps and chains.

3. Connections must be marked in accordance with the Standard Fire Protection Code. Connection must be UL listed and FM approved.

4. Fire Department connections must be by Potter-Roemer, Grinnell, Dixon Powhatan, Elkhart or Reliable.

M. Post indicator valves must be UL-listed and FM approved, complete with valve and indicator post, operating wrench and break-a-way lock. Operating nut size and shape must be in accordance with local and insuring authority requirements.

N. Cathodic Protection: As required by the Contract or as specified by AHJ requirements.

O. Pipe Bedding: In accordance with trenching and backfilling requirements as required by the Contract.

P. Trench Backfill Materials (in Right of Way and on private property): In accordance with trenching and backfilling requirements as required by the Contract.

Q. Polyethylene Encasement:

1. Polyethylene for encasement of water mains and buried fire protection systems piping must be 8 mil tube or sheet complying with ANSI C105/AWWA A21.5.

R. Polyethylene Pipe:

1. Polyethylene Pipe: Temporary water service connection for potable water must be High Density Polyethylene (HDPE) pipe, and must be straight-length, noncoiled.

2. Pipe and fittings must be homogenous throughout, and free of visible cracks, holes, foreign inclusions, blisters, dents, or other injurious defects. The pipe and fittings must be as uniform as commercially practicable in color, opacity, density, and other physical properties.

3. Butt Fusion Fittings – Fittings must be PE3408 HDPE, Cell Classification of 345464C as determined by ASTM D3350, and approved for AWWA use. Butt Fusion Fittings must have a manufacturing standard of ASTM D3261. Molded & fabricated fittings must have a pressure rating equal to the pipe unless otherwise specified in the Drawings. Fabricated fittings are to be manufactured using Data Loggers. Temperature, fusion pressure and a graphic representation of the fusion cycle must be part of the quality control records. All fittings must be suitable for use as pressure conduits, and per AWWA C906, have nominal burst values of three and one-half times the WPR of the fitting. Fittings must also be listed as NSF/ANSI 61.

4. Restrained joint fittings for HDPE must be the same as specified for ductile iron.

2.02 SOURCE QUALITY CONTOL

A. Water Main material to be used in the AHJ Right-of-Way is subject to pre-installation taste and odor testing requirements in accordance with the AHJ Standard Specification.

PART 3 - EXECUTION

3.01 PREPARATION

A. Coordinate the installation of the water distribution system with other utilities to avoid conflicts.

B. Trench, Bed and Backfill as required by the Contract.

C. Provide safety systems for trench excavation as required by the Contract.

D. Trench dewatering as required by the Contract. Continue trench dewatering until the ends of the pipe are sealed and provisions are made to prevent floating of the pipe. Prevent trench water or other deleterious materials from entering the pipe at any time.

E. Support and protect existing utilities as required by the Contract.

F. Abandon and remove existing water mains indicated for removal or abandonment as required by the Contract.

G. Pipe handling requirements in accordance with AHJ and WSDOT Standard Specifications.

H. Protection:

1. Prevent water from entering trenches and excavations.

2. Other than chlorination chemicals and water, place nothing inside pipes and fittings.

3. Fit expansion plug into open end of pipe joints being laid. Allow plug to remain in-place when pipe laying is not in progress; remove plug when pipe laying is resumed. Protect mouth of pipe being laid in rock.

4. Protect exposed, installed pipe from damage and flooding.

5. Keep installed pipe clean until work has been accepted.

6. Protect pipe coatings from damage during storage and installation.

3.02 CONSTRUCTION

A. Construct the water distribution system in accordance with AWWA C600 and AWWA M41.

B. Water distribution systems installed in the AHJ Right-of-Way must comply with the AHJ Standard Specifications. Water distribution systems installed in the WSDOT Right-of-Way must comply with the WSDOT Standard Specifications Section 7-09

C. Installing Restrained Joint Pipe: Fully extend restrained joint pipe by pulling on the joint after the installation of the pipe segments as recommended by the manufacturer of the restrained joint pipe. Bending or Bucking of the pipe when the pipe is charged will not be accepted. Submit the restrained joint manufacturer's recommendations for pipe installation to ST Resident Engineer at least seven (7) days prior to installation.

D. Cutting of Restraint Joint Pipe: Cut in accordance with the pipe manufacturer's recommendations. Submit to ST Resident Engineer at least two (2) business days in advance, the pipe manufacturer's recommendation for cutting restrained joint pipe including the Manufacturer's Certificate of Compliance stating the cutting process does not adversely impact the pipe material or integrity of the joint.

E. Installing Pipe on Curves: On long radius curves, either horizontal or vertical, pipe may be installed with standard pipe by deflecting the joints. Do not exceed the manufacturer's printed recommended deflection at each pipe joint when pipe is installed on a horizontal or vertical curve. Submit to the Resident Engineer the pipe manufacturer's joint deflection recommendations prior to pipe installation indicating deflections are within allowable AWWA specification tolerances.

F. AWWA Gate Valves: Comply with AWWA C600 and AWWA M44. Install each underground valve with stem pointing up and with valve box.

G. Minimum depth of cover over the pipe is 36 inches.

H. Concrete Thrust Blocking: WSDOT and AHJ Standard Specifications.

I. After all tests, flushing, and disinfection have been successfully completed and the installed water main and appurtenances, have been approved by ST Resident Engineer make requests for shutdowns for connections at least five (5) business days in advance of the desired shutdown.

J. Connections for the AHJ owned Water Mains: Comply with the AHJ Standard Specifications.

K. Steel Casing

1. Before installation, coat casing exterior and line interior with shop-applied anticorrosive coating conforming to AWWA C210. Minimum coating and lining thickness must be 16 mils dry film thickness; however, thickness must not exceed manufacturer's recommended thickness. Coating and lining type must be a polyamide epoxy-coal tar equal to Tnemec Hi-Build Tneme-Tar, Series 46H-413. Carrier pipe for water mains must be the type indicated on the issued for Construction Drawings.

2. Casing spacers must be installed in casings over 10-feet long. Where casing spacers are not used; the carrier pipe must be more than 10 feet in length (no pipe joints inside casing). Casing spacer shell must be manufactured in two pieces from heavy gauge T-304 stainless steel or 14 gauge hot rolled pickled steel joined with ribbed flanges. The shell must be lined with PVC linear 0.090 inch thick wiht 85-90 durometer. Carbon steel casing spacer shell and risers must be coated with heat fused PolyVinyl chloride coating, or hot-dip galvanized. Casing spacers must meet the AHJ requirements.

3.03 FIELD QUALITY CONTROL

A. Notice of Testing

1. Notify the Resident Engineer and AHJ at least 2 days before testing. Perform all testing in the presence of the Resident Engineer and the AHJ.

B. Testing of AHJ owned water mains and appurtenances must be in accordance with AHJ requirements:

1. Hydrostatic pressure tests: per AHJ requirements.

2. Flushing and Disinfections: per AHJ requirements.

C. Provide as-built surveys of all new water system components, service connections, and profile adjustments in accordance with the Contract Documents. Show actual locations of piping mains, valves, connections, and depths of burial on the as-built drawings.

D. Fire Protection System Requirements

1. Flush all underground piping in accord with NFPA standards.

2. Each portion of the underground dry standpipe must be hydrostatically tested before piping is covered or concealed.

3. Test installed systems and products hydrostatically, using testing instruments calibrated by an Independent Testing Laboratory in accordance with quality assurance/quality control requirements as stated elsewhere in the Contract Documents, and flush after removal of testing equipment in accordance with applicable requirements of NFPA 14. Repair leaks and retest repaired parts of both the existing and new sections of the systems. Repair damages resulting from the system's failure during the test at no additional cost to Sound Transit.

a. Test standpipe hydrostatically for two hours without loss in pressure, using the most convenient outlet connection. The test pressure for the buried standpipe system is 350 psig.

4. Perform tests in the presence of the Resident Engineer and AHJ Fire Department. Give 48-hour notice prior to test and notify the AHJ Fire Department and AHJ Utilities Department. The Resident Engineer will review certificates and test reports, and will inspect the standpipe to verify conformance with Standards and other References in the Specifications including NFPA 14.

3.04 PROTECTION

A. All post indicator valves and fire department connections must be identified with weatherproof, permanent signs identifying their corresponding service risers or areas.

END OF SECTION

SECTION 33 30 00

SANITARY SEWERAGE UTILITIES

PART 1 - GENERAL

1.01 SUMMARY

A. Section includes:

1. Requirements for providing the sanitary sewerage system and connection to the existing sanitary sewer system as indicated, temporary bypasses, utility support system, including but not limited to pipes, manholes, and the related cast iron and steel products required for covers and manhole steps and ladders.

1.02 REFERENCES

A. This Section incorporates by reference the latest revisions of the following documents:

1. American Society for Testing and Materials International (ASTM):

a. ASTM A53/A53M Standards Specification for Pipe, Steel, Black and Hot Dipped, Zinc-Coated, Welded and Seamless.

b. ASTM D3034 Standard Specification for Type PSM Poly (Vinyl Chloride) (PVC) Sewer Pipe and Fittings.

2. American Water Works Association (AWWA):

a. AWWA C104, Cement-Mortar Lining for Ductile-Iron Pipe and Fittings

b. AWWA C111, Rubber-Gasket Joints for Ductile-Iron Pressure Pipe and Fittings

c. AWWA C150, Standard for Thickness Design of Ductile-Iron Pipe

d. AWWA C151, Ductile-Iron Pipe, Centrifugally Cast

e. AWWA C900, Standard for Polyvinyl Chloride Pressure Pipe and Fabricated Fittings

f. AWWA C905, Polyvinyl Chloride (PVC) Pressure Pipe and Fabricated Fittings, 14in. through 48in.

3. Washington State Department of Transportation (WSDOT):

a. Standard Specifications for Road, Bridge, and Municipal Construction.

4. Washington Administrative Code (WAC):

a. WAC 296-155, Part N: Safety Standards for Construction Work, Excavation, Trenching and Shoring.

5. Standard Plans and Specifications of Authority Having Jurisdiction (AHJ).

1.03 COORDINATION

A. Contractor must hold a preconstruction meeting to discuss the approved Construction Work Plan (CWP). The CWP must address hold points, schedule of work, related approved submittals.

B. Prior to commencing any work, Contractor must provide minimum of 30 days notice to schedule meeting(s) with the Resident Engineer to discuss the work plan and schedule.

C. Coordinate new building service connections with building contractor and/or Resident Engineer, the connection point for side sewer typically 5 feet outside of building.

D. Contractor must obtain required permit(s) for the work from AHJ.

E. The Resident Engineer's review of work plans does not relieve the Contractor of its responsibilities or of any public liability for sanitary sewer service disruptions or uncontrolled discharge of sewage.

1.04 SUBMITTALS

A. Submit:

1. Certification: Manufacturer's Certificate of Compliance, based on the manufacturer's routine quality control tests showing that the pipe meets or exceeds the requirements of the pertinent ASTM, ANSI, or AWWA specification.

2. A written proposal for temporary sewer bypasses including a list of all equipment being used to the Resident Engineer, for review at least 10 business days in advance of scheduled work. The Resident Engineer's review does not relieve the Contractor of its responsibilities or of any public liability for sewage spills.

3. Structural Engineer's Qualifications: For Contractor-designed utility support systems, submit qualifications of design engineer demonstrating similar recent design experience.

4. Construction Work Plan:

a. Submit to the Resident Engineer, for review, a separate work plan for each AHJ. Work plans must include the following elements:

1) Temporary sewer bypasses including a list of all equipment being used.

2) Data to document required size of pumps, provisions for redundancy, alarms, alarm monitoring and noise mitigation and other information as required by AHJ.

3) Sewer trunk mainline and utility structure installation.

5. Elements for maintenance of fire station operations, work restrictions in WSDOT right-of-way and identification and protection of existing utilities.

6. Side sewer demolition per all AHJ requirements.

7. New side sewer or connection to existing per all AHJ requirements.

8. Working Drawings: For the utility support system designed by the contractor, submit Working Drawings signed and sealed by a structural engineer currently registered in the State of Washington. Design the support system to conform to

the AHJ Building code and the applicable seismic design criteria. Include the following in the Working Drawings:

a. Element sizes and locations.

b. Element assembly and connection details.

c. Interfacing details for adjacent construction elements.

9. Calculations: For the utility support system designed by the Contractor, submit calculations to support the design shown on the Working Drawings. Ensure calculations are signed and sealed by a structural engineer currently registered in the State of Washington.

10. Record Documents: Show actual locations of sewer system components, including piping mains, connections, pipe inverts at manholes and locations of cleanouts on as-built drawings.

B. Transmit:

1. Product Data: Transmit catalog cuts, and other pertinent data indicating proposed materials, accessories, details, and construction information.

2. Reports indicating field tests performed and results obtained.

1.05 QUALITY ASSURANCE

A. Structural Engineer: For Contractor-designed utility support systems, select a licensed structural engineer currently registered in the State of Washington, with a minimum of 5 years of experience in the design and construction of utility support systems or similar systems.

B. Contractor: Company specializing in manufacturing products specified in this Section:

1. With minimum three (3) years documented experience.

C. Contractor: Company specializing in performing Work of this section with minimum three(3) years documented experience. A licensed side sewer contractor per AHJ requirements must perform all work on side sewers..

1.06 DELIVERY, STORAGE, AND HANDLING

A. Inspect materials delivered to site for damage, unloaded, and stored with minimum handling.

B. Do not store materials directly on the ground. The inside of pipes and fittings must be kept free of dirt and debris. Protect seals from dirt and damage.

C. Protect before, during and after installation, plastic pipe and fittings from many environments that would result in damage or deterioration to the material.

D. Keep a copy of the manufacturer's instructions available at the construction site at all times and follow these instructions unless directed otherwise by the Resident Engineer.

E. Handle pipe, fittings, and other accessories in such manner as to ensure delivery to the trench in sound undamaged condition. Carry, do not drag, pipe to trench.

PART 2 - PRODUCTS

2.01 DESIGN CRITERIA FOR UTILITY SUPPORT

A. Design and maintain utility support system so that the vertical deflection of the utility does not exceed 3/4 inch over 48 feet more or less than the design grade specified in the issued for Construction Drawings.

B. Design utility support system with allowances for eccentricities resulting from the misalignment of framing elements.

C. Design utility support system to allow in the field and periodic adjustment to remediate unacceptable vertical deflections.

D. Ensure that connections of the utility support system to any adjacent structural element, such as shoring walls or station excavation structural elements, does not compromise the strength of those structures.

2.02 BYPASS PUMPING CRITERIA

A. If bypass pumping is required for relocation of sanitary sewers, the Contractor must include this element in the Construction Work Plan required for Sound Transit and AHJ review. Size pumps to accommodate the Five-Year Peak Day Flow, with pumps in operation and Average Day Wet Weather Flow with one pump out of service. With approval of the AHJ inspector, pump capacity can be established by determining flows in the field or by house count. Bypass pumping must include sound attenuation incompliance with the AHJ Noise Ordinance. In addition, night operation of bypass pumping will require a high-level alarm with telemetry or a full-time watch.

2.03 MATERIALS

A. General:

1. Install only new materials.

2. Casing:

a. Steel casing: In accordance with the AHJ requirements.

b. PVC casing:

1) Casings must be PVC conforming to AWWA C900/905 DR18.

2) Carrier pipe for sewage must be PVC (SDR 35).

c. Casing Spacer per AHJ requirements.

B. Pipe, fittings, and joints: Pipe type used for sanitary, combined and side sewers is as specified on the Issued for Construction Drawings and AHJ requirements:

1. Restrained Joint Ductile Iron Pipe and Fittings:

a. Ductile Iron Pipe conforming to AWWA C151.

b. Push-on joints conforming to AWWA C111.

c. Cement mortar lined in accordance with AWWA C104.

d. Thickness Class 50 in accordance with AWWA C150.

2. Restrained Joint pipe and fittings: Boltless design which is flexible after assembly and can be disassembled without special tools, such as TR Flex Restrained Joint Pipe as manufactured by U.W. Pipe Co. or approved equal. Joint to have a positive metal to metal contact locking system without the use of gripping teeth and the joint restraint system for the pipe must be the same as the joint restraint system for the pipe fittings.

3. Polyvinyl Chloride (PVC) Pipe for gravity sewer: Pipe, fittings, and joints in accordance with AWWA C900, pressure class 100 and in accordance with the AHJ standards requirements.

4. Polyvinyl Chloride (PVC) Pipe for force mains: Pipe and fittings in accordance with AWWA C900, pressure class 165 psi.

5. Pipe joints must be restrained joints.

C. Precast Manholes: In accordance with the WSDOT structure type noted on the Issued for Construction Drawings and as specified in WSDOT Standard Specification Section 9-05.50(2).

D. Polypropylene Sanitary Sewer Pipe conforming to the following requirements:

1. For Pipe Sizes up to 30 inches: ASTM F2736.

2. For Pipe Sizes from 30 to 60 inches: ASTM F2764.

3. Fittings: Factory welded, injection molded or PVC.

E. Cast-in-place Manholes: Per AHJ Standard Requirements.

F. Manhole Ring and Cover: Per WSDOT Standard Plan B-30.70-03.

G. Steps, handholds, and ladders: Per WSDOT Standard Plan B-30.90-01.

H. Mortar and Grout: Per AHJ Standard Requirement. In the absence of AHJ requirements, comply with WSDOT Standard Specifications Section 9-20.4 for mortar; and WSDOT Standard Specifications Section 9-20.3(2) for grout.

I. Pipe Bedding: For PVC pipe, corrugated polyethylene pipe, and other thermoplastic pipe, bedding material must be imported material conforming to crushed surfacing top course material of WSDOT Standard Specifications Section 9-03.9(3).

J. Trench Backfill Materials (in WSDOT Right of Way):

1. For transverse trenches (perpendicular to the roadway centerline) in paved areas, crushed rock backfill conforming to WSDOT Standard Specifications Section 9-03.9(3) must be used as trench backfill for pipe.

2. For longitudinal trenches (parallel to the centerline of the roadway) in paved areas, backfill (4 feet and deeper below finished grade) must conform to WSDOT Standard Specifications Section 9-03.14(1). Backfill the top 4 feet of longitudinal trenches with crushed rock conforming to WSDOT Standard Specifications Section 9-03.9(3).

K. Trench Backfill Materials (on private property, under hard surfaced areas) must be Gravel Borrow in accordance with WSDOT Standard Specifications Section 9-03.14(1).

L. Trench Backfill Materials (on private property, under landscaped/grass areas) must be in accordance with WSDOT Standard Specifications Section 9-03.14(1), except the material used within 6-inches of the crown of the pipe must contain no rocks larger than 1.5 inches.

M. Polyethylene Tubing and fittings for Small Diameter Sewer Forcemain must be in accordance with WSDOT Standard Specifications Section 9-30.6(3) and Section 9-30.6(4).

PART 3 - EXECUTION

3.01 PREPARATION

A. Notify Resident Engineer at least 20 days prior to beginning Work associated with the new or existing sanitary/combined sewer system. In addition to the Resident Engineer's inspection, The Utility Owner will provide its own inspection services for the Work associated with the sanitary/combined sewer systems within AHJ Right-of-Way. The Utility Owner and the AHJ will inspect side sewer replacements and connections before reactivation. Provide side sewer as-built drawings to the AHJ and the Utility Owner in accordance with their standards.

B. Inspection: Inspect pipe before it is installed. Remove defective products from the Project Site.

3.02 CONSTRUCTION

A. Excavate trenches for utility installation as required by the Contract .

B. Pipe abandonment and removals are part of demolition as required by the Contract.

C. Dewatering: Keep excavations free of water during excavation, installation of pipeline, and placement of bedding and trench backfill. Control surface run-off to prevent entry or collection of water in excavations. Dewater excavations containing water as required by the Contract.

D. Trench Safety and Support Systems: Where trench excavation is deeper than 4 feet, construct and maintain safety systems that meet the requirements of the WAC Chapter 296-155 Part N. Comply with the requirements as required by the Contract :

1. Monitor structurally supported sewer for movement throughout the project duration.

2. Pipe installation: Per AHJ Standard Requirement or WSDOT Standard Specification Section 7-08.

E. Install manholes, re-channel existing manholes, make manhole pipe connections, and connections to existing manholes in accordance with the AHJ Standard Requirements or WSDOT Standard Specification Section 7-05.

F. Temporary Sewer Bypass: Install a temporary bypass to maintain uninterrupted Sewer service. Install a bypass system that diverts the effluent flow at an upstream access manhole and pump it through a separate conduit to a downstream reentry point or to an adjacent Sewer system. Size the pump and bypass conduit to adequately handle the flow. Size to ensure that the effluent level in the bypass pumping manhole does not rise more than 1 foot above the crown of the lowest incoming Sewer pipe.

G. When connecting new pipe to existing pipe where materials differ use only new pipe having the same inside diameter as the existing. Match inverts, grade, and alignment. Connect joints between pipes with a mismatched wall thickness with a flexible gasketed coupling, adapter or coupling-adapter to make a watertight joint.

H. Leave side sewer connections and sewer mains uncovered until the Resident Engineer has inspected and approved the work.

I. Connection to existing manholes must be in accordance with the AHJ requirements.

J. Deflection testing for sanitary sewer mains constructed of PVC or other flexible pipe must comply with AHJ requirements.

K. Fill existing sewer lines to be abandoned with sand, concrete or controlled density fill, in accordance with AHJ requirements unless called out for removal on the Issued for Construction Drawings.

L. Where a sewer is constructed crossing a water main, one full length of sewer pipe must be used with the pipe centered for maximum joint separation.

M. If connection to existing manhole places a channel directly under access opening, move ladder and rotate cone section to place access over concrete shelf.

3.03 FIELD QUALITY CONTROL

A. Notice of Testing:

1. Notify the Resident Engineer at least 2 business days before testing. Perform all testing in the presence of the Resident Engineer and AHJ representatives.

B. Television Inspection:

1. Videotape the interior of all newly installed sewer pipes 6 inches through 48 inches to determine the acceptance of the Work. Perform television inspection work in accordance with the AHJ Standard Requirements.

3.04 CLEANING

A. Cleaning and Testing:

1. Clean pipes and manholes and perform testing as specified in the AHJ Standard Requirements:

a. For pipes installed in WSDOT Right-of-Way clean pipes and manholes and perform testing as specified in WSDOT Standard Specification Section 7-17.3(2) Cleaning and Testing.

2. Furnish, install, and operate pumps, gages, meters, and individual pipe connections for testing.

END OF SECTION

SECTION 33 40 00

STORM DRAINAGE UTILITIES

PART 1 - GENERAL

1.01 SUMMARY

A. Section includes:

1. Requirements for providing the storm water drainage system and connection to storm drainage mains as indicated, including but not limited to drainage pipes, culverts, related drainage structures, trench drains, catch basins, drainage inlets, storm manholes, and the related cast iron and steel products required for gratings, covers, and manhole steps and ladders.

1.02 REFERENCES

A. This Section incorporates by reference the latest revisions of the following documents:

1. Washington State Department of Transportation (WSDOT):

a. Standard Specifications for Road, Bridge and Municipal Construction.

b. Highway Runoff Manual

2. American Society for Testing and Materials International (ASTM):

a. ASTM A53/A53M Standard Specification for Pipe, Steel, Black and Hot-Dipped, Zinc-Coated, Welded and Seamless.

3. Standard Specifications and Plans of Authority Having Jurisdiction (AHJ).

4. Washington Administrative Code (WAC):

a. WAC 296-155, Part N: Safety Standards for Construction Work, Excavation, Trenching and Shoring.

1.03 COORDINATION

A. Prior to commencing any work, contractor must provide minimum of 30 days notice to schedule meeting(s) with Sound Transit project team to discuss the work plan and schedule.

B. Submit to the Resident Engineer, for review, a work plan for which encompasses all storm sewer work both temporary (if required by the Contractor's means and methods) and permanent.

C. The Contractor will coordinate with Resident Engineer to schedule a meeting with the Utility DOR to discuss the Contract Plans for understanding the details and dimensions.

D. The Resident Engineer's review of work plans does not relieve the Contractor of its responsibilities or of any public liability for stormwater uncontrolled overflow.

E. Contractor must obtain required permit(s) for the work from AHJ

F. Construct all drainage inlets, manholes, catch basins, and pipes in accordance to the jurisdictional requirements herein. Refer to the contract plans for ownership designation associated with each drainage element.

1.04 SUBMITTALS

A. Submit:

1. Product Data: Catalog cuts, and other pertinent data indicating proposed materials, accessories, details, and construction information.

2. Manufacturer's Installation Instructions: Indicate special procedures required to install Products specified.

3. Certification: Certification or other acceptable evidence that the following meet or exceed specified requirements of the AHJ.

a. Pipe

b. Jointing

c. Catch Basins and Manholes

d. Frame, Grates and Solid Covers

e. Flexible Couplings

f. Manufacturer’s affidavit certifying compliance of materials with specifications.

4. Reports indicating field tests made and results obtained.

5. As-Built Documents: Record location of all new storm drainage system, including pipe runs, connections, catch basins, cleanouts, and invert elevations.

6. Work Plan: Work plan for temporary storm sewer bypassing, if required by the Contractor’s selected means and methods as specified herein.

1.05 QUALITY ASSURANCE

A. Structural Engineer: For Contractor-designed utility support systems, select a licensed structural engineer currently registered in the State of Washington, with a minimum of five (5) years of experience in the design and construction of utility support systems or similar systems.

B. Manufacturer: Company specializing in manufacturing products specified in this section with minimum three (3) years documented experience.

C. Installer: Company specializing in performing Work of this section with minimum three (3) years documented experience.

1.06 DELIVERY, STORAGE, AND HANDLING

A. Inspect materials delivered to site for damage, unloaded, and stored with minimum handling.

B. Do not store materialsdirectly on the ground. The inside of pipes and fittings must be kept free of dirt and debris. Protect seals from dirt and damage.

C. Before, during and after installation, protect plastic pipe and fittings from many environments that would result in damage or deterioration to the material.

D. Keep a copy of the manufacturer's instructions available at the construction site at all times and follow these instructions unless directed otherwise by the Resident Engineer.

E. Handle pipe, fittings, and other accessories in such manner as to ensure delivery to the trench in sound undamaged condition. Carry, do not drag, pipe to trench.

PART 2 - PRODUCTS

2.01 MATERIALS

A. Install only new materials.

B. All work within WSDOT right-of-way must follow the WSDOT Standard Specifications or as detailed in the Issued for Construction Drawings.

C. Pipe:

1. Pipe material as indicated on the Issued for Construction Drawings and/or in accordance with WSDOT Standard Specifications and AHJ requirements.

2. Comply with the requirements of the WSDOT Standard Specifications, Section 9-05, Pipe, Drainage Structures and Culverts:

a. Clearly mark all pipe with type, class, date of manufacturer, location of manufacturing plant and thickness. Lettering: Legible and permanent under normal conditions of handling and storage.

b. Design pipe exterior loading strength and bedding to accommodate construction and permanent loading.

D. Jointing: Provide jointing material from same material as pipes and in accordance with the manufacturer's recommendations. Comply with the AHJ requirements.

E. Catch Basins and Manholes: Use type as indicated on the Issued for Construction Drawings and in accordance with the AHJ requirements.

F. Frame and Grate: Use cast iron in accordance with the WSDOT and AHJ requirements.

G. Flexible Couplings: Use type as indicated on the Issued for Construction Drawings and/or in accordance with the WSDOT and AHJ requirements.

2.02 BEDDING AND BACKFILL MATERIAL

A. Bedding and backfill materials must be in accordance with AHJ requirements.

B. Pipe Bedding: Meet the AHJ requirements. All work within WSDOT right of-way and all pipes/structures owned and maintained by Sound Transit must conform to WSDOT Standard Specifications Section 9-03.12(3)

C. Structural Backfill for Manholes Catch Basins and Inlets: Meet the AHJ requirements.

D. All work within WSDOT right-of-way and all pipes/structures owned and maintained by Sound Transit must conform to WSDOT Standard Specifications

2.03 MANHOLES

A. Manholes, Catch Basins, Inlets and Pipes: Use type as indicated on the Issued for Construction Drawings and in accordance with the AHJ requirements. All work within WSDOT right-of-way and all pipes/structures owned and maintained by Sound Transit must conform to WSDOT Standard Specifications and per the WSDOT Standard Plans.

B. Metal covers, frames and grates: Use cast iron or ductile iron in accordance with the AHJ requirements. All work within WSDOT right-of-way and all pipes/structures owned and maintained by Sound Transit must conform to WSDOT Standard Specifications and per the WSDOT Standard Plans.

2.04 MARKINGS

A. Markings on pipe, tubing, and fittings must be in accordance with utility identification

1. As required by the Contract.

B. Furnish marking tape or tracer wire in accordance with utility identification requirements

1. As required by the Contract.

2.05 OUTFALL PROTECTION

A. Quarry Spalls and Riprap must be in accordance with Section 9-13 in the WSDOT

1. Standard Specifications.

2.06 TRASH RACK

A. Trash Rack: All parts of the Trash rack must be made of non-corrosive materials. Work must conform with the Issued for Construction Drawings and in accordance with the AHJ requirements. All work within WSDOT right-of-way and all pipes/structures owned and maintained by Sound Transit must conform to WSDOT Standard Specifications and per the WSDOT Standard Plans.

2.07 PIPE ANCHOR

A. Pipe anchor must be a concrete collar per WSDOT Standard Plan B-60.20-00.

PART 3 - EXECUTION

3.01 PREPARATION.

A. Existing storm sewer systems shown on the plans to be abandoned and/or removed must be abandoned and/or removed in accordance with Demolition and/or AHJ requirements.

B. Verify size, material, joint type, elevation, and horizontal location of existing pipeline to be connected to new pipeline or new equipment, if applicable.

C. Clearly identify and promptly set aside defective or damaged pipe.

D. Stop work and promptly notify Resident Engineer if stormwater lines not shown on the plans are encountered.

3.02 CONSTRUCTION

A. All pipes/structures owned and maintained by Sound Transit or WSDOT within WSDOT right-of-way must conform to WSDOT Standard Specifications and per the WSDOT Standard Plans.

B. Follow the AHJ specifications of for the construction and installation requirements for the pipe, related structures, and other incidental work.

C. Maintain uninterrupted service with temporary storm sewer bypass as depicted on the Issued for Construction Drawings, when construction work will interfere with storm water flow in the existing sewer. Install Temporary Sewer Bypass in accordance with the AHJ Standard Specifications.

D. Where storm drains are temporarily cut or plugged, temporary mitigation is to be provided, including pumping storm water if required to maintain uninterrupted storm drainage service.

E. Dewatering: Keep excavations free of water during excavation, installation of pipeline, and placement of bedding and trench backfill. Control surface run-off to prevent entry or collection of water in excavations. Dewater excavations containing water in accordance with dewatering requirements as required by the Contrcat.

F. Trench Safety and Support Systems: Where trench excavation is deeper than 4 feet, construct and maintain safety systems that meet the requirements of the Washington Administrative Code (WAC) Chapter 296-155 Part N. Comply with excavation support and protection requirements as required by the Contract.

3.03 OUTFALL PROTECTION

A. Install Outfall Protection or Rock Outfall Protection at pipe discharge locations per details and information shown in the Issued for Construction Drawings. Install outfall protection in accordance with Section 8-15 of the WSDOT Standard Specifications, and as shown on the Issued for Construction Drawings.

3.04 FIELD QUALITY CONTROL

A. TV Inspection: Videotape the interior of all storm pipes 6 inches through 48 inches to determine the acceptance of this portion of the Work. Follow the AHJ Standard Specifications.

B. Furnish, install, and operate pumps, gauges, meters, and individual pipe connections for testing.

C. Notice of Testing: Notify the Resident Engineer and AHJ representatives at least 2 days before testing. Perform all testing in the presence of the Resident Engineer and AHJ representatives.

3.05 CLEANING

A. Clean and test pipelines and appurtenances within 15 working days after backfilling of pipelines and structures. Test pipe for leakage after installation in accordance with the AHJ Standard Specifications.

B. Clean and test concrete structures following backfilling in accordance with the AHJ requirements.

END OF SECTION

SECTION 33 40 10

SUPPORT FOR STORM DRAINAGE PIPING

PART 1 - GENERAL

1.01 SUMMARY

A. Section includes:

1. Requirements for the temporary support for the temporary bypass storm drain across access pits located within the construction area.

1.02 REFERENCES

A. This Section incorporates by reference the latest revisions of the following documents:

1. American Society for Testing and Materials (ASTM) International:

a. ASTM A36/A36M Standard Specification for Carbon Structural Steel.

2. Authority Having Jurisdiction (AHJ):

a. Standard plans and specifications.

1.03 COORDINATION

A. Contractor must hold a preconstruction meeting will be held to discuss the approved Construction Work Plan (CWP). The CWP must address hold points, schedule of work, related approved submittals.

B. Prior to commencing any work, Contractor must provide minimum of 30 days' notice to schedule meeting(s) with Resident Engineer to discuss the work plan and schedule.

C. Contractor must obtain required permit(s) for the work from AHJ.

1.04 SUBMITTALS

A. Submit

1. Work Plan

2. Design Plan for temporary bypass storm drain and support system

3. Product Data: For the following:

4. Steel pipe hangers and supports (if manufactured product is used).

5. Shop Drawings: Show fabrication and installation details and include design calculations for the following:

a. Bypass pipe wall thickness.

b. Bypass pipe flange connections.

c. Bypass pipe hangers and/or supports.

d. Bypass pipe hanger and/or support fastening to structural elements.

e. Plans of the pipe support system designed by a registered civil engineer in the state of Washington.

PART 2 - PRODUCTS

2.01 SYSTEM DESCRIPTION

A. Manufacture shop or field fabricated pipe support assemblies as required by Contract.

B. Support a temporary bypass storm drain through access pits to protect piping from sagging or failure.

C. Design, fabricate and construct the temporary bypass pipe system to provide an adequate support. The pipe material must be steel or HDPE, and pipe size must be based on the specific project conditions. For steel pipe, use a minimum bypass pipe wall thickness of 0.687 inch.

D. Support the temporary bypass pipe within each access pit at a minimum of three locations in addition to the supports at the sides of the access pit.

E. Use only bolted flange connections for any coupling of the bypass pipe within the access pits.

2.02 PERFORMANCE REQUIREMENTS

A. Design bypass pipe and supports for bypass pipe capable of supporting combined weight of supported systems and system contents.

2.03 METAL FRAMING SYSTEMS

A. Shop or field-fabricated pipe-support assembly made of steel channels and other components.

B. Coatings: Manufacturer's standard finish, unless bare metal surfaces are indicated on the Contract.

C. Nonmetallic Coatings: Plastic coating, jacket, or liner.

2.04 MISCELLANEOUS MATERIALS

A. Structural Steel: ASTM A36/A36M, steel plates, shapes, and bars; black and galvanized.

PART 3 - EXECUTION

3.01 EXAMINATION

A. Examine areas and conditions in which supports and anchors are to be installed.

B. Do not proceed with Work until unsatisfactory conditions have been corrected in a manner acceptable to the Resident Engineer.

END OF SECTION

SECTION 33 46 00

SUBDRAINAGE

PART 1 - GENERAL

1.01 SUMMARY

A. Section includes:

1. Requirements for subsurface foundation drains at abutments, retaining walls, noise walls, building walls, track underdrains, ballast bridge drainage, permeable drainage panels, perforated pipe and composite underdrains with piping, filter aggregate, and filter fabric as indicated.

1.02 REFERENCES

A. This Section incorporates by reference the latest revisions of the following documents:

1. American Association of State Highway and Transportation Officials (AASHTO).

a. AASHTO M278 Standard Specification for Class PS46 Poly (Vinyl Chloride) (PVC) Pipe.

2. Authority Having Jurisdiction (AHJ):

a. Standard plans and specifications.

3. American Society for Testing and Materials (ASTM) International:

a. ASTM D3034 Standard Specification for Type PSM Poly (Vinyl Chloride) (PVC) Sewer Pipe and Fittings.

b. ASTM F679 Standard Specification for Poly (Vinyl Chloride) (PVC) Large-Diameter Plastic Gravity Sewer Pipe and Fittings.

c. ASTM D4873 Standard Guide for Identification, Storage, and Handling for Geosynthetic Rolls and Samples.

d. ASTM D6707-06 Standard Specification for Circular-Knit Geotextile for Use in Subsurface Drainage Applications.

e. ASTM D1593 Standard Specification for Nonrigid Vinyl Chloride Plastic Sheeting.

f. ASTM D2564 Standard Specification for Solvent Cements for Poly (Vinyl Chloride) (PVC) Plastic Piping Systems.

g. ASTM D1785 Standard Specification for Poly (Vinyl Chloride) (PVC) Plastic Pipe, Schedules 40, 80, and 120.

h. ASTM D2665 Standard Specification for Poly (Vinyl Chloride) (PVC) Plastic Drain, Waste, and Vent Pipe and Fittings.

i. ASTM D2729 Standard Specification for Poly (Vinyl Chloride) (PVC) Sewer Pipe and Fittings.

j. ASTM D6134 Standard Specification for Vulcanized Rubber Sheets Used in Waterproofing Systems.

k. ASTM F758 Standard Specification for Smooth-Wall Poly (Vinyl Chloride) (PVC) Plastic Underdrain Systems for Highway, Airport, and Similar Drainage.

4. Geosynthetic Research Institute (GRI):

a. GRI – GT12(a) Standard Specification for Test Methods and Properties for Nonwoven Geotextiles Used as Protection (or Cushioning) Materials.

b. GRI – GM17 Standard Specification for Test Methods, Test Properties and Testing Frequency for Linear Low Density Polyethylene (LLDPE) Smooth and Textured Geomembranes.

5. Washington State Department of Transportation (WSDOT):

a. Standard Specifications for Road, Bridge, and Municipal Construction.

b. Standard Plans.

1.03 COORDINATION

A. Contractor must hold a preconstruction meeting to discuss the approved Construction Work Plan (CWP). The CWP must address hold points, schedule of work, related approved submittals.

B. Prior to commencing any work, Contractor must provide minimum of 30 days notice to schedule meeting(s) with Resident Engineer to discuss the work plan and schedule.

C. Contractor must obtain required permit(s) for the work from Authorities Having Jurisdiction (AHJ).

1.04 SUBMITTALS

A. Submit:

1. Product Data: Catalog cuts, and other pertinent data indicating proposed materials, accessories, details, construction information, and pipe penetration detail.

2. Product Sample: Furnish physical sample of Impermeable Sheet Liner.

B. Transmit:

1. Certification: Certification or other acceptable evidence that the following meet the WSDOT Standard Specifications.

a. Pipe.

b. Jointing.

c. Flexible Couplings.

d. Gravel Backfill for Drains.

e. Geotextiles.

f. Manufacturer's affidavit certifying compliance of materials with specifications.

g. Manufacturer's Certificate of Compliance based on the manufacturer's routine quality control tests showing that the material meets or exceeds the requirements in the referenced WSDOT Standard Specifications or Standard Plan.

PART 2 - PRODUCTS

2.01 MATERIALS

A. Pipe and Fittings:

1. Pipe Connection Requirements: To ensure continuous alignment of pipe, ends of pipe must be bell-and-spigot, grooved, ship lapped, or secured with couplings, collars, or other connection fittings.

2. Plastic Pipe:

   a. PVC Pipe, Perforated: Perforated polyvinyl chloride sub-surface drain (SSD) pipe and fittings must meet the requirements of AASHTO M278, PS46. Pipe size shall be a minimum 6-inch diameter.

   b. PVC Pipe, Solid Wall: PVC pipe must conform to the requirements of ASTM D3034, SDR 35 for diameter sizes 4-inch through 15-inch, and of ASTM F679 for diameter sizes 18-inch through 48-inch. The minimum pipe stiffness shall be 46 lb/in/in.

3. Perforated Corrugated Polyethylene Underdrain Pipe must be in accordance with WSDOT Standard Specifications Section 9-05.2(7) and Section 9-05.2(8).

4. Perforated Corrugated Metal Pipe must be in accordance with WSDOT Standard Specifications Section 9-05.2(4).

5. Drainage Materials:

   a. Drainage and Filter Aggregates: For aggregate drainage and filter material (permeable material) for filling trenches under, around, and over underdrains, use clean gravel or crushed stone that conforms to WSDOT Standard Specifications Section 9-03.12(4), Gravel Backfill for Drains or AHJ requirements.

6. Filter Fabric: Geotextile engineering fabric conforming to AHJ requirements:

   a. In accordance with WSDOT Standard Specifications, Section 9-33.1 for Geotextile for Underground Drainage, Moderate Survivability, Class A.

7. Preformed Permeable Drainage Liner: Prefabricated composite plastic drainage panels designed to provide hydrostatic relief for concrete foundation walls and retaining walls as indicated. Use panels of a button-pattern or other raised dimple feature which forms a drain core with flow channels at least 3/8 inch in thickness or clear depth, with geotextile filter fabric bonded to the raised pattern to prevent soil from entering the core channels and blocking the flow of water. Furnish drainage liner complete with installation accessories.

8. Drainage Matting: Use composite drainage matting for hydrostatic-relief drainage liner, consisting of a nylon or polypropylene core geo-matrix of open, three dimensional design, with a geotextile filter fabric bonded to the core to prevent soil from entering the core and blocking the flow of water. Ensure a minimum thickness

or clear depth of 1/2 inch. Furnish drainage matting complete with installation accessories.

9. Impermeable Sheet Liner: Flexible membrane sheet, Linear Low Density Polyethylene (LLDPE), smooth, conforming to GRI – GM17 with a minimum thickness of 30 mils. Prefabricate Liner to the extent practical to limit overlap locations (i.e., field seams).

10. For impermeable sheet liner below subballast, place a geotextile cushion above and below the liner for protection. Geotextile cushion must consist of non-woven polypropylene material with a minimum mass per unit area of 16 oz/sy conforming to the requirements of GRI - GT12(a) conforming to ASTM D1593 or ASTM D6134, minimum 10 mils thick, unless otherwise noted on the Issued for Construction Drawings:

    a. Adhesive: Synthetic rubber base cement, manufactured for use with polyvinyl chloride or synthetic rubber membrane material for cold application.

    b. Tape: Use pressure-sensitive neoprene or vinyl-chloride rubber adhesive tape for sealing of laps and joints as recommended by the manufacturer of the sheet liner material or a heavy-duty cloth masking tape, minimum 3 inches wide.

    c. Sealant tape must be double sided tape intended for sealing sheets of geomembrane, moldable, minimum 4 inches wide, minimum 25-mils thick. GeoSynthetics, LLC LTAPEM604 moldable sealant tape; GeoCHEM, Inc Geo-G25 Repair / Seam Tape; Owens Corning GeoLap adhesive tape; or approved equal. “Another specs for the Tape that could be used alternatively with the above one.

11. Filter Fabric Sock: Tubular polyester knit fabric conforming to ASTM D6707-06, Type “A” Fabric.

PART 3 - EXECUTION

3.01 INSTALLATION

A. Pipe Installation:

1. Excavate trenches for underdrain pipe as shown in the issued for Construction Drawings. When not indicated, excavate to a width equal to the outside diameter of the pipe plus 12 inches and to a depth of 3 inches minimum below the grade established for the invert of the pipe. Coordinate with requirements for earth moving, and trenching and backfilling as required by the contract .

2. Lay impermeable sheet liner over prepared and compacted subgrade where indicated. Lap edges of impermeable sheet liner not less than 4 inches and ends not less than 6 inches, with all laps sealed continuously with adhesive and tape. Repair punctures and tears in liner sheets that occur during subsequent construction operations.

3. Lay filter fabric in trench where indicated. Lap edges of filter fabric not less than 4 inches and ends not less than 6 inches.

4. Lay pipe to line and grade as following:

a. If pipe is of the bell-and-spigot type, lay bells in crosscuts cut in trench. Lay pipe with bell end uphill.

b. Install Filter Fabric Sock over pipe prior to laying pipe in trench as indicated on the issued for Construction Drawings.

5. Fill space below the pipe invert with a layer of drainage aggregate as indicated on the issued for Construction Drawings. Lay pipe upon this layer, perforations down. Join sections with sleeve couplings furnished by the pipe manufacturer or other appropriate method as determined by the pipe-ends configuration and approved by the Resident Engineer. Employ appropriate equipment to draw pipe sections together.

6. Do not use rocks, bricks, broken concrete or asphalt to give intermediate support to pipes. Do not leave large stones larger than 2 inches or other hard objects in contact with the pipes.

7. Fill excavations for underdrains with drainage or filter aggregates as indicated on the issued for Construction Drawings. Place drainage aggregate and compact as required to fill voids and prevent settlement, without damaging the underdrain pipe. Wrap drainage aggregate with filter fabric, overlapping as shown in the drawings.

8. Composite Underdrains: Construct composite underdrains as indicated on the issued for Construction Drawings. Surround perforated pipe with filter aggregates and envelope the composite underdrain with filter fabric. Provide solid-wall PVC pipe risers and cleanouts, including installation accessories.

B. Installation of Preformed Permeable Drainage Liner:

1. Apply preformed permeable drainage liner or drainage matting to below-grade concrete walls as indicated on the issued for Construction Drawings. Apply panels in accordance with the manufacturer's instructions, with filter fabric side out.

2. Shingle each course, overlapping panels in the direction of water flow. Provide side laps in accordance with manufacturer's instructions.

3. Provide interface with subsurface drainage piping at footings where indicated on the issued for Construction Drawings. Follow manufacturer's instructions for correct interface installation.

C. Installation of Impermeable Sheet Liner

1. Handle all geosynthetic materials in accordance with ASTM D4873.

2. Impermeable sheet liner must include a geotextile cushion above and below the liner for protection. Roll out liner and geotextile cushion smoothly, without wrinkles.

3. Protect exposed geosynthetic surfaces from damage due to wind and other weather conditions, construction activities, and other factors until the overlying materials are placed.

4. Overlap geotextile panels a minimum of 18 inches or as shown on the Issued for Construction Drawings. Geotextile panels will not require seaming provided that the overlap area is not displaced during other construction activities so that subgrade or liner materials are exposed.

5. Overlap adjoining sections of liner and secure together with double sided sealant tape per manufacturer’s recommendations. Apply sealant tape to a clean, dry

surface free of debris, oils, dust, and other deleterious materials. Complete verification of tape installation prior to the overlapping layer being placed.

6. No additional payment will be made for sheet liner in the overlapped section.

7. Placement of materials above the impermeable sheet liner:

   a. Place overlying ballast or soil materials using equipment and methods that will prevent damage to the impermeable sheet membrane.

   b. If material is placed by bulldozing, use low ground pressure equipment , and place the material in a single lift or in a 3-foot thick lift, whichever is less.

   c. Push material at lift face carefully to avoid dragging across or introducing tension in the geosynthetic layers.

   d. No hauling equipment (such as dump trucks or loaders) must operate on less than 3 feet of material. Construct temporary haul roads across the placement area to meet this requirement, if necessary.

   e. If material is placed using excavators, minimize drop height onto geosynthetic layers. To avoid dragging across or introducing tension in the geosynthetic layers, do not push material sideways after placement.

   f. Excavators must not operate above the impermeable sheet liner.

8. Anchor the ends of the impermeable liner per manufacturer's recommendation.

D. Installation of Ballast Bridge Drainage:

1. Apply Waterproof material on top of concrete bridge as indicated on the issued for Construction Drawings.

2. Install galvanized drain pan at locations indicated on the issued for Construction Drawings. Secure flush on concrete deck, above waterproofing material.

3. Install CMP perforated half pipe, overlapping segments in the direction of water flow.

4. Ballasted bridge drainage must slope to the drain and extend over the expansion joint. Install a segment of full pipe to transition into track underdrain system. Transition segment must be watertight.

5. Install cleanouts at the upstream and downstream end of the ballasted bridge drainage system.

E. Drain Pipe:

1. Use drain pipe at downstream of the underdrain pipe to connect to downstream drainage system or daylighting.

2. Drain pipe must be the same material as the underdrain pipe without the perforation.

END OF SECTION

SECTION 33 46 26

STORM DRAINAGE PONDS, DETENTION PIPES AND VAULTS

PART 1 - GENERAL

1.01 SUMMARY

A. Section includes:

1. Requirements for the stormwater detention pond, precast concrete infiltration vault, precast concrete detention vault, and detention pipe.

2. Excavation and completing all work associated with storm drainage ponds as shown on the Issued for Construction Drawings and the Authorities Having Jurisdiction (AHJ), Standard Details. This work includes the construction and installation of the flow control structure, flow splitter (as required), maintenance/access roads including fencing and gates, berms, pond liners and all other associated features with the Pond as shown on the Issued for Construction Drawings and AHJ Standard Details.

3. Pond Excavation must entail excavation of the pond site to the lines and grades shown in the contract plans. Excavated material must become the property of the contractor for disposal at a permitted site outside of the project limits.

4. Designing, furnishing and installing precast concrete detention or infiltration vault in accordance with the Issued for Construction Drawings and these Specifications.

5. Excavation, shoring, foundation preparation, bedding, jointing, backfilling and compacting for the construction of precast concrete detention vaults and infiltration vaults, and all associated components within the vaults including the flow control structure/device and risers. The flow control structure/device must be included in the construction and installation of the detention or infiltration vault.

6. Designing, furnishing and installing detention pipes in accordance with the Issued for Construction Drawings and these specifications. Excavation, shoring, foundation preparation, bedding, jointing, backfilling and compacting for the construction of a flow control structure and detention pipe(s) for storm water detention storage.

1.02 REFERENCES

A. This Section incorporates by reference the latest revisions or the dated references (as noted) of the following documents.

1. American Association of State Highway and Transportation Officials (AASHTO)

   a. AASHTO M196 Standard Specification for Corrugated Aluminum/Aluminized Steel Pipe for Sewers and Drains.

   b. AASHTO LRFD Bridge Design Specifications.

   c. AASHTO Designation MP-20 Section.

2. Authority Having Jurisdiction (AHJ):

   a. Standard plans and specifications.

3. American Society for Testing and Materials (ASTM) International:

   a. ASTM D698 Standard Test Methods for Laboratory Compaction Characteristics of Soil Using Standard Effort (12,400 ft-lbf/ft^3 (600 KN- m/m^3))

   b. ASTM D1785 Standard Specification for Poly (Vinyl Chloride) (PVC) Plastic Pipe, Schedules 40, 80, and 120

   c. ASTM D2321 Practice for Underground Installation of Thermoplastic Pipe for Sewers and Other Gravity-Flow Applications

   d. ASTM D3212 Standard Specification for Joints for Drain and Sewer Plastic Pipes Using Flexible Elastomeric Seals

   e. ASTM D3350 Standard Specification for Polyethylene Plastics Pipe and Fittings Materials

   f. ASTM F2562 Standard Specification for Steel Reinforced Thermoplastic Ribbed Pipe and Fittings for Non-Pressure Drainage and Sewerage

   g. ASTM F679 Standard Specification for Poly(Vinyl Chloride) (PVC) Large-Diameter Plastic Gravity Sewer Pipe and Fittings

4. Geosynthetic Research Institute (GRI)

   a. GRI – GT12(a) Standard Specification for Test Methods and Properties for Nonwoven Geotextiles Used as Protection (or Cushioning) Materials

   b. GRI – GM17 Standard Specification for Test Methods, Test Properties and Testing Frequency for Linear Low Density Polyethylene (LLDPE) Smooth and Textured Geomembranes

   c. GRI – GM19 Standard Specification for Team Strength and Related Properties of Thermally Bonded Polyolefin Geomembranes

5. Washington State Department of Transportation (WSDOT)

   a. Standard Specifications for Road, Bridge, and Municipal Construction

6. Washington Administrative Code (WAC)

   a. WAC 296-155, Part N: Safety Standards for Construction Work, Excavation, Trenching and Shoring

1.03 COORDINATION

A. Contractor must hold a preconstruction meeting to discuss the approved Construction Work Plan (CWP). The CWP must address hold points, schedule of work, related approved submittals.

B. Prior to commencing any work, Contractor must provide minimum of 30 days' notice to schedule meeting(s) with the Resident Engineer to discuss the work plan and schedule.

C. Contractor must obtain required permit(s) for the work from AHJ.

1.04 SUBMITTALS AND TRANSMITTALS

A. Submit:

1. Product Sample: Furnish physical sample of pond liner prior to delivery to site.

2. Shop Drawings:

a. Annotate Shop drawings to indicate all materials to be furnished and installed under this Specification, and all applicable standards for materials, required tests of materials and design calculations assumptions for structural analysis. Submit shop drawings for:

1) Precast concrete detention vault, and precast concrete infiltration vault in accordance with WSDOT Standard Specifications Section 6-01.9.

2) Detention pipes (SRPE, CMP or PVC, as specified in the Issued for Construction Drawings).

3) Detention Pond Liner.

3. If the Contractor chooses the cast-in-place method for the concrete detention vault, the design must be stamped by a licensed Structural Engineer in the State of Washington.

B. Transmit:

1. Product Data: Manufacturer's product data, catalog cuts, and other pertinent data indicating proposed materials, accessories, details, and construction information for storm drainage ponds, detention vaults and pipes, and flow control structure materials.

2. As-builts of the ponds, detention vaults and pipes, in accordance with as-built documents as required by the Contract.

3. Pond Construction: A recommendation by the Geotechnical Engineer of Record is required for any deviations from the Specifications.

4. Maintenance Manuals: For the detention/water quality vault and pond, provide a maintenance manual that address frequency of maintenance, type of maintenance diagram of control structures and orifice sizes, access ports, inlet and outlet pipes, any additional special features or tools required and any maintenance restrictions or limitations.

PART 2 - PRODUCTS

2.01 MATERIALS

A. For storm drainage ponds or detention vaults that will be owned or maintained by Sound Transit, the materials used in the Work must be as indicated on the Issued for Construction Drawings and conform to the applicable provisions of WSDOT Standard Specifications as required by the Contract.

B. For storm drainage ponds, detention vaults and detention pipes that will be owned or maintained by the AHJ, use materials that conform to AHJ details, located on the approved materials list, and conform to applicable provisions of WSDOT Standard Specifications as required by the Contract.

C. Protect any metal structural components from corrosion and have a low maintenance coating. The Contractor must submit proposed metal protective coatings with supporting documentation for review prior to installation. Coatings must have a 50- year design life.

2.02 DETENTION VAULT MATERIALS

A. Materials must meet the requirements of the following WSDOT Standard Specifications Sections as required by the Contract:

1. Concrete Structures: 6-02.2
2. Rubber Gaskets: 9-04.4
3. Flexible Plastic Gaskets: 9-04.5
4. Structures, Conduit, and Fittings: 9-05
5. Metal Castings: 9-05.15
6. Reinforcing Steel: 9-07
7. Concrete Blocks: 9-12.1
8. Concrete Brick: 9-12.2
9. Nonshrink Cement Grout: 9-20.3(2)
10. Mortar: 9-20.4

2.03 DETENTION PIPE SYSTEM MATERIALS

A. Corrugated Metal Pipe (CMP) Detention Pipes:

1. Materials for detention pipe must meet the following sections of the WSDOT Standard Specifications and as modified in this Specification:

   a. Corrugated Aluminum Culvert Pipe: 9-05.5

   b. Corrugated Aluminized Steel Culvert Pipe: 9-05.4

   c. Corrugated Steel Pipe Arch, Treatment 1: 9-05.4

2. Furnish all corrugated metal pipe and pipe arch with annular ends, neoprene gaskets, and lap type couplings.

3. Minimum joint spacing must be 10 feet. Overlapping of adjacent pipes are not allowed and utilize appropriate banding in order to properly secure individual pipes in place.

4. Integral end sections: Each barrel of the CMP system must have an integrated bulkhead to resist loading at the end/start of the barrel.

B. SRPE Detention Pipe Materials:

1. Manufacture SRPE in accordance with the applicable requirements of ASTM F2562.

2. Virgin high density polyethylene stress-rated resins are used to manufacture SRPE pipe and complimentary fabricated fittings. Resins must conform to the minimum requirements of cell classification 345464C as defined and described in the latest version of ASTM D3350.

3. Join pipe lengths on site using coupling bands, bell & spigots, or welded couplers especially designed for SRPE pipe. Joints must meet one of the performance levels as required and specified:

a. High Performance (HP) Joints (30 inches – 72 inches) must be gasketed, bell and spigot joints where both the bell and spigot are reinforced with steel that is fully encased in stress-rated high density polyethylene (meeting the requirements set forth in the above Material Properties paragraph) and that have been laboratory tested to 10.8 psi in accordance with ASTM D3212.

b. Welded Coupler (WC) Joints (36 inches – 120 inches) must utilize plain ended SRPE pipe joined by extrusion welded couplers. Welded couplers to be installed by Contech authorized service provider. Contractor is responsible for providing a clean, dry surface for welding as described in the Contech "SRPE Steel Reinforced PE Technology Installation Guide". The field installed welded couplers must be capable of successfully passing field leakage testing as described in the Contech "SRPE Detention Post Installation Leak Testing Procedure".

4. Sampling, testing, and inspection of PE resin, metal sheets and coils used for manufacturing the SRPE system must be in accordance with the Contract requirements. All fabrication of the product must occur within the United States.

C. Polyvinyl (PVC) Detention Pipe Materials

1. Materials for detention pipe must meet the following sections of the WSDOT Standard Specifications and as modified in this Specifications:

a. Solid Wall PVC Storm Sewer Pipe: 9-05.12(1), PS46

2.04 DETENTION POND MATERIALS

A. Detention Pond Liner

1. For ponds identified in the Contract Plans as requiring a liner, the liner must be made of Linear Low Density Polyethylene (LLDPE) conforming to GRI – GM17, with a minimum 40 mils. Place a geotextile cushion below the liner for protection. All joints must be thermally field seamed and inspected per manufacturer requirements and GRI – GM19. All penetrations through liner must include either welded or compression skirts. Submit shop drawings with specifications for approval.

B. Geotextile Cushion

1. Nonwoven geotextile fabric for protection of detention pond liner must conform to GRI – GT12(a), with a minimum weight of 10 ounces per square yard.

2.05 FLOW CONTROL STRUCTURE

A. Catch Basin must be in accordance with WSDOT Standard Specifications Section 7-05.

B. Flow Control Riser:

1. Corrugated aluminum pipe must conform to AASHTO M196 Standard Specification for Corrugated Aluminum Pipe for Sewers and Drains.

2. PVC pipe must conform to ASTM D1785 Standard Specification for Poly (Vinyl Chloride) (PVC) Plastic Pipe, Schedules 40, 80, and 120.

3. Aluminized Steel pipe must conform to AASHTO M274 – Standard Specification for Steel Sheet, Aluminum-Coated (Type 2), for Corrugated Steel Pipe.

C. Shear Gate must be in accordance with WSDOT Standard Plans.

D. Fabricate flow restrictors in detention control structures from 0.060 inch aluminum pipe, PVC pipe (Profile Wall, Schedule 40 or SDR 35), CPE, or HDPP (SDR 32.5).

E. Pipe support materials must match restrictor (if metal). For plastic materials, aluminum (3 inches W by 0.060 inch T) or stainless steel (3 inches W by 0.090 inch T) must be used. Fasten pipe supports to the structure wall with 5/8-inch stainless steel expansion bolts or lag and shield.

F. Fabricate orifice plates from aluminum plate (0.125 inch), high density polyethylene (HDPE) sheeting (0.25 inch), or PVC sheeting (0.25 inch). Bolt orifice plates to the flange on the flow restrictor with stainless steel hardware.

G. Protective screening for orifices less than one (1) inch in diameter must be hot-dipped galvanized, 0.5 inch by 0.5 inch "hardware cloth" or polymer geo-grid with the approximate same size openings.

2.06 OVERFLOW STRUCTURE

A. Catch Basin must be in accordance with WSDOT Standard Specifications Section 7-05

B. Debris Cage must be as shown in the Issued for Construction Drawings.

2.07 MAINTENANCE ACCESS

A. 5 ft by 10 ft access hatch must be traffic loading rated (H-25) reinforced concrete per WSDOT Standard Specifications Section 6-02. Riser must be at least the same size of the hatch opening.

B. Maintenance (manhole) access for concrete vault

1. 24-inches diameter manhole circular frame (ring) and cover per WSDOT Standard Plan B-30.70.

2. Riser must be minimum 48-inches diameter manhole sections with a manhole cone or manhole top slab.

C. Maintenance Access for detention pipe

1. 24-inches diameter manhole circular frame (ring) and cover per WSDOT Standard Plan B-30.70.

2. For detention pipe 36-inch diameter or larger: Riser must be minimum 36-inches diameter with the same material as the detention pipe.

3. Large diameter concrete manhole or catch basin with connection pipe (36-inch minimum) to the detention pipe as shown on the Issued for Construction Drawings.

2.08 EARTH MATERIALS

A. Bedding per WSDOT Standard Specifications Section 9-03.12(3) Gravel Backfill for Pipe Zone Bedding.

B. Structural fill must be in accordance with earth moving material requirements as required by the Contract.

C. Embankment Material

1. A minimum of 20 percent silt and clay, a maximum of 60 percent sand, a maximum of 60 percent silt, with nominal gravel and cobble content per United States Department of Agriculture's Textural Triangle.

D. Controlled Density Fill per WSDOT Standard Specifications Section 2-09.3(1)E.

E. Quarry Spalls per WSDOT Standard Specification Section 9-13.01(5), and a minimum of 10 percent of the spalls to be between 4 inches to 8 inches.

PART 3 - EXECUTION

3.01 CONSTRUCTION REQUIREMENTS FOR DETENTION VAULT AND DETENTION PIPE

A. Detention Vault:

1. Designed, detailed, and constructed in accordance with the requirements of WSDOT Standard Specifications Section 6-01,6-02, and Section 6-03, this Section and the Issued for Construction Drawings unless otherwise stated in the AHJ requirements.

2. The Resident Engineer must approve any shift of the structure.

3. The structural design must take into account the loadings indicated on the Issued for Construction Drawings which include: hydrostatic pressure, groundwater levels, buoyancy, earth surcharge pressures, adjacent supports (abutments, columns) for aerial guideway, retaining walls, traffic loading for HS-25 and stabilizer outriggers. Structural design must take into account the seismic and dynamic loads from adjacent structures including guideway columns and drilled shafts.

   a. Buoyancy design for the vault should account for an empty vault condition with groundwater elevation surrounding the vault at the top of vault elevation. The calculation should provide a Factor of Safety of at least 1.2, using the weight of the vault and soil, without the sidewall friction, unless otherwise noted in the Contract Documents.

4. The traffic loading for structural design must take into account AHJ Vehicle, Fire Truck and Apparatus Loading.

5. Slope the bottom floor slab of the detention vault as indicated on the Issued for Construction Drawings and per the AHJ details to facilitate the collection of sediment below access hatches and other access.

6. Provide water stops at all cast-in-place construction joints as approved and pre- cast vaults must have an approved rubber gasket system.

7. The structural design must take into account any additional construction loading per the Contractor's means and methods.

B. Detention Pipe System:

1. Construct all work including bedding, pipe installing and jointing for the construction of detention pipe and flow control structure in accordance to the Issued for Construction Drawings, this specification and additional requirements in accordance with AHJ requirements.

C. Flow Control Devices:

1. Flow control structures and all control elevations must be in accordance with the Issued for Construction Drawings and AHJ requirements.

2. For AHJ maintained detention facilities the alternative of "polymer geo-grid with the approximate same size openings" will not be allowed.

3. After pipes have been placed in their final positions, openings in the walls of the flow control structure must be grouted in place to present a smooth surface, flush with inner and outer surfaces of walls.

3.02 CONSTRUCTION REQUIREMENTS FOR DETENTION AND INFILTRATION PONDS

A. Excavation and any required shoring of the detention ponds must be in accordance with requirements of WSDOT Standard Specifications Section 2-09, this Section, the Issued for Construction Drawings and the AHJ requirements when applicable. Excavation, trenching and shoring must also comply with the WAC 296-155, Part N: Safety Standards for Construction Work, Excavation, Trenching and Shoring.

B. Subgrade

1. The Contractor must take care to minimize disturbance to the native soils outside the detention pond limits. Dewater groundwater levels at the bottom of the excavation to a minimum depth of 2 feet below the bottom of the excavation. Maintain groundwater level at least 2-feet below the bottom of the excavation until pond excavation is complete and berms constructed and stabilized.

C. Pond Berms and Embankments

1. Remove and backfill loose, soft, or unstable soil encountered at the bottom of the excavation of the berms in accordance with WSDOT Standard Specifications Section 2-09.3(1)C.

2. Construct pond embankment in accordance with WSDOT Standard Specifications Section 2-03 Roadway, Excavation and Embankment and AHJ requirements when applicable.

3. Construct pond embankments on prepared native consolidated soil (or adequately compacted and stable fill soils analyzed by a Geotechnical Engineer) free of loose surface soil materials, vegetation, roots, and other organic debris.

4. Compact embankment material in such a manner as to produce a dense, low permeability engineered fill that can tolerate post-construction settlements with a minimum of cracking. Place embankment fill on a stable subgrade and compacted to a minimum of 95 percent of the Standard Proctor Maximum Density, ASTM D698. Placement moisture content must be within 1 percent dry to 3 percent wet of the optimum moisture content.

D. Emergency Overflow Spillway

1. Unless noted otherwise on the Issued for Construction Drawings, the construction of the emergency spillway must consist of 2- to 8-inch quarry spalls with a minimum thickness of 1-foot.

2. Install geotextile on prepared subgrade below the quarry spalls. Geotextile must be a needle-punched nonwoven geotextile meeting the requirements of WSDOT Standard Specifications Section 9-33, Tables 4 and 5 for high-survivability geotextile, Class B or C.

E. Detention Pond Liner

1. For those locations shown, install liner as indicated on the Issued for Construction Drawings. Liner must include geotextile cushion below liner for protection. Roll out liner and geotextile cushion smoothly, without wrinkles.

2. Install pond liner so it can be covered with 12 inches of top dressing forming the bottom and sides of the detention facility. Top dressing consists of 6 inches of native soil; with orange plastic safety fencing placed, then placed the additional 6 inches of native soil. The embedded safety fence I to mark the location of the liner for future maintenance operation 6 inches above the membrane.

3. Extend the top of the pond liner into the top berm and must be secured in an anchor trench. Offset the anchor trench 2 feet from the top of the berm and must be 18 inches wide and 18 inches deep, with the top of the anchor trench a minimum of 12 inches below the final ground surface. Secure the pond liner in the anchor trench during pond liner installation and prior to backfilling. Backfill the anchor trench with embankment fill after the pond liner has been fully installed. Cover the anchor trench with a minimum of 12 inches of fill.

4. Overlap a minimum of 12 inches of the liner to form a continuous bond per GRI-GM19. The liner must be protected during installation and repaired as per manufacturer's instructions, if damaged.

F. Infiltration Facility

1. PIT Test: For each infiltration facility including infiltration pond and infiltration bioretention cell:

a. Contractor must complete pilot infiltration testing in accordance with Ecology requirements after excavation to subgrade elevation but before completing construction of the facility.

b. Contractor must provide equipment, labor and water supply for pilot infiltration testing.

c. The Geotechnical Engineer of Record must complete measurements and observation of the infiltration testing and must determine if any changes are required to the design infiltration rate based upon the pilot infiltration testing.

2. Contractor must avoid the use of heavy construction equipment less than 2 feet above the finished grade over the footprint of the infiltration facilities.

3.03 INSTALLATION OF DETENTION AND INFILTRATION VAULTS

A. Excavation and Shoring

1. Excavation, shoring, and extra excavation must be in accordance with WSDOT Standard Specifications Section 2-09, Structure Excavation Class B.

2. Structural shoring per WSDOT Standard Specifications Section 2-09.3(3) will be required as shown in the drawing, or the excavation limit with allowable side slopes exceed the allowable or permitted construction limit.

3. Excavation, trenching and shoring must comply with the WAC 296-155, Part N: Safety Standards for Construction Work, Excavation, Trenching and Shoring.

B. Subgrade

1. Contractor must take care to minimize disturbance to the native subgrade exposed at the bottom of the excavation for detention vaults. Dewater the groundwater levels at the bottom of the excavation to a minimum depth of 2 feet below the bottom of the excavation. Maintain groundwater level at least 2 feet below the bottom of the excavation until the vault structures are in place and the backfill around the vaults reaches at least 2 feet above the groundwater level outside the excavation. Compact the native subgrade soils exposed at the bottom of the excavation to 95-percent of

the maximum density determined by the Compaction Control Test according to WSDOT Standard Specifications Section 2-03.3(14)D.

2. If loose, soft, or unstable soil is encountered at the bottom of the excavation it must be removed and backfilled in accordance with WSDOT Standard Specifications Section 2-09.3(1)C.

3. Backfill for the detention vaults must be in accordance with WSDOT Standard Specifications Section 2-09 and the details shown in the Issued for Construction Drawings.

C. Infiltration Vault

1. PIT Test: For each infiltration facility, the Contractor must complete pilot infiltration testing in accordance with Ecology requirements after excavation to subgrade elevation but before completing construction of the facility. The Contractor must provide equipment, labor and water supply for pilot infiltration testing. The Geotechnical Engineer of Record must complete measurements and observation of the infiltration testing and must determine if any changes are required to the design infiltration rate based upon the pilot infiltration testing.

D. Appurtenances:

1. Construct vault access including precast riser section, eccentric cone or manhole flat top slab, adjustment rings and manhole frame and grate in accordance with the provisions of WSDOT Standard Specifications Section 7-05.

2. Concrete blocks used for manhole access must conform to WSDOT Standard Specifications Section 9-12.1. Supply metal castings in accordance with WSDOT Standard Specifications Section 9-05.15.

3. Protect metal structural components from corrosion and have a low maintenance coating. The Contractor must submit proposed metal protective coatings with supporting documentation to the Resident Engineer for review and approval. Coatings must have a 50 year design life.

4. For precast vaults, sealing between riser sections must be accomplished by placing Portland cement mortar, compressible neoprene foam gaskets, asphaltic mastic material, or asphalt impregnated gasket materials between sections, as recommended by the manufacturer to produce a water-tight seal.

5. Ventilation opening using cleanout will be installed at each corner of the vault to allow proper ventilation during maintenance of the vault.

3.04 INSTALLATION OF DETENTION PIPE SYSTEMS

A. Trenching and Excavating:

1. Trenching, excavation, backfill and compaction must be in accordance with WSDOT Standard Specifications Sections 2-09 and 7-08, except as modified in this Specifications.

2. Trench backfill material around the pipes must conform to WSDOT Standard Specifications Section 9-03.14 Gravel Borrow, unless otherwise shown in the Drawing.

B. Corrugated Metal Detention Pipe

1. Gasket seams in pipes and bands in accordance with AASHTO M196.

2. Weld the end plate to the end of the detention pipe with a watertight continuous weld.

3. The end of the detention pipe inside the flow control structure must be ground smooth of all burrs and sharp edges.

4. Protect aluminum that is to be in contact with a Portland cement product (CDF, concrete, grout, mortar, and other similar products) as specified in WSDOT Standard Specifications Section 7-08.3(2)D.

5. Bedding for the detention pipe must be as shown on the Issued for Construction Drawings and AHJ details.

6. Coupling bands for steel detention pipes must be in conformance with Issued for Construction Drawings, and these Specifications.

7. All lifts placed around the pipe must be in a controlled manner. Lifts must not exceed 8 inches uncompact lift height. Backfill the pipe evenly, no more than a two-lift differential between the sides of any pipe in the system at all times during backfill process. Backfill must be advanced along the length of the system (for multiple pipes) at the same rate to avoid differential loading on any pipes in the system.

C. SRPE Detention Pipe

1. The SRPE detention pipe system must be in accordance with ASTM D2321 and follow the manufacturer's installation procedure and recommendations. Contractor must provide clean, dry surface for welding when using welded coupler.

2. All lifts placed around the pipe must be in a controlled manner. Lifts must not exceed 8 inches uncompact lift height. Backfill the pipe evenly, no more than a two-lift differential between the sides of any pipe in the system at all times during backfill process. Backfill must be advanced along the length of the system (for multiple pipes) at the same rate to avoid differential loading on any pipes in the system.

3. Bedding for the SRPE detention pipe must be as shown on the Issued for Construction Drawings and per WSDOT Standard Specifications Section 7-05 and Section 7-08.

D. Polyvinyl (PVC) Detention Pipe

1. All lifts placed around the pipe must be in a controlled manner. Lifts must not exceed 8 inches uncompact lift height. Backfill the pipe evenly, no more than a two-lift differential between the sides of any pipe in the system at all times during backfill process. Backfill must be advanced along the length of the system (for multiple pipes) at the same rate to avoid differential loading on any pipes in the system.

E. Maintenance Access

1. The maintenance access must comprise of circular manhole ring and cover, manhole flat top slab, and riser pipe. Access risers must not be spaced more than 100-feet apart and placed so there is not more than 50-feet travel distance inside the pipe to an access.

2. The manhole ring and cover must be minimum 24-inch diameter to provide adequate inspection and maintenance without restriction and obstruction to entry into interior of the pipe system. Support manholes ring and cover by a 60-inches diameter manhole flat top slap.

3. The flat top slap must not be imposing direct loading to the 36-inch diameter riser pipe. Install Ladder in the riser pipe to 24 inches above the detention pipe invert.

3.05 INSTALLATION AND TESTING OF DETENTION POND LINERS

A. Liner must include geotextile cushion below liner for protection. Roll out liner and geotextile cushion smoothly, without wrinkles.

B. Thermally field seam and inspect per manufacturer requirements and GRI – GM19.

3.06 FIELD QUALITY CONTROL

A. Testing of flow control systems for leakage must be in accordance with WSDOT Standard Specifications Section 7-04.3(1)B.

B. Test all detention systems as described in this Specifications. The Contractor must notify the Resident Engineer at least five (5) days in advance of testing.

C. Pipe System

1. Pipe/tanks system must be free from visible leaks. Seal all penetrations to prevent leaks.

2. Shear gates and valves must not leak.

3. Fill the tank systems to the 2-year water surface elevation. Insert pipe plugs into all inlet and outlet piping. The maximum allowable leakage must not exceed one percent of volume below the 2-year water surface elevation over a 24-hour test period.

D. Vault System

1. Precast and cast-in-place vaults must be free from visible leaks. Cold joints must include water stops to prevent leaks. Concrete mix designs and placement must produce compact, dense and impervious concrete with smooth faces. Admixtures should be considered to minimize porosity. Clean and repair all rock pockets, voids, seams, joints, cracks and other defects to prevent leakage. Acceptable repairs include epoxy injection, chemical grout injection. “Sacking” with Portland cement grout will not be allowed.

2. Grout all penetrations to prevent leaks.

3. Shear gates and valves must not leak.

4. The vault system must be filled to the 2-year water surface elevation. Insert pipe plugs into all inlet and outlet piping. The maximum allowable leakage must not exceed one percent (1%) of volume below the 2-year water surface elevation over a 24-hour test period.

5. Clean and test vault following backfilling in accordance with AHJ requirements.

3.07 PROTECTION

A. Contractor must avoid the use of heavy construction equipment less than 2 feet above the top of rock bottom for infiltration over the footprint of the infiltration facilities.

END OF SECTION

SECTION 33 49 00

BIORETENTION

PART 1 - GENERAL

1.01 SUMMARY

A. Section Includes:

1. Requirements for the construction of bioretention cells as shown in the drawings, including but is not limited to excavation and haul, placement of geomembrane liner, underdrainage, and bioretention soil, protection, and remediation.

1.02 REFERENCES

A. This Section incorporates by reference the latest revisions of the following documents:

1. American Association of State Highway Transportation Officials (AASHTO).

a. AASHTO M 278 - Standard Specification for Class PS46 Poly (Vinyl Chloride) (PVC) Pipe.

2. American Society for Testing and Materials International (ASTM):

a. ASTM D 422 - Standard Test Methods for Particle Size Analysis of Soils.

b. ASTM D 1557 - Test Method for Laboratory Compaction Characteristics of Soil Using Modified Effort (56,000 ft-lbf/ft3 (2,700 kN-m/m3)).

c. ASTM D 2434 - Standard Test Method for Permeability of Granular Solis (Constant Head).

d. ASTM 5084 Standard Test Methods for Measurement of Hydraulic Conductivity of Saturated Porous Materials Using a Flexible Wall Permeameter.

e. ASTM 5890 Standard Test Method for Swell Index of Clay Mineral Component of Geosynthetic Clay Liners.

f. ASTM 5891 Standard Test Method for Fluid Loss of Clay Component of Geosynthetic Clay Liners.

3. Test Methods for the Examination of Composting and Compost (TMECC):

a. TMECC 02.02-B - Sample Sieving for Aggregate Size Classification.

b. TMECC 03.08-A – Classification of Inerts.

c. TMECC 04.01 - Total Organic Carbon.

d. TMECC 04.02D - Total Kjeldhal Nitrogen, Semi-Micro Kjeldahl Technique.

e. TMECC 04.10 - Electrical Conductivity for Compost.

f. TMECC 04.11-A – 1:5 Slurry pH.

g. TMECC 05.05-B In-Vitro - Germination and Root Elongation.

h. TMECC 05.07A – Loss-On-Ignition Organic Matter Method.

i. TMECC 05.08-B - Carbon Dioxide Evolution Rate.

j. TMECC 05.08-E - Solvita® Maturity Index.

4. Washington State Department of Transportation (WSDOT):

a. Standard Specifications and Standard Plans for Road, Bridge, and Municipal Construction.

b. Standard Plans.

5. Washington Administrative Code (WAC):

a. WAC 173-350 Solid Waste Handling Standards.

6. Authority Having Jurisdiction (AHJ):

a. Standard plans and specifications.

7. Department of Ecology:

a. Stormwater Management Manual for Western Washington (SWMMWW).

b. Low Impact Development Technical Guidance Manual for Puget Sound.

1.02 COORDINATION

A. Contractor must hold a preconstruction meeting to discuss the approved Construction Work Plan(CWP). The CWP must address hold points, schedule of work, related approved submittals.

B. Prior to commencing any work, Contractor must provide minimum of 30 days' notice to schedule meeting(s) with Resident Engineer to discuss the work plan and schedule.

C. Contractor must obtain required permit(s) for the work from AHJ.

1.03 SUBMITTALS

A. Submit:

1. At least 14 days prior to starting construction of the bioretention cells, submit the following to the Resident Engineer for approval:

a. Grain size analysis results of Mineral Aggregate performed in accordance with ASTM D422.

b. Quality analysis results for compost performed in accordance with Seal of Testing Assurance (STA) standards, as specified in WSDOT Standard Specifications Section 9-14.4(8).

c. Organic content test results of mixed bioretention soil. Perform organic content test in accordance with TMECC 05.07A.

d. Modified Proctor compaction testing of mixed bioretention soil, performed in accordance with ASTM D1557.

e. A description of the equipment and methods to mix the Mineral Aggregate and compost to produce bioretention soil.

f. Permeability or hydraulic conductivity testing of the bioretention soil, performed in accordance with ASTM D2434: For the landscape bioretention soil assume a relative compaction of 85 percent of modified maximum dry density (ASTM D1557).

g. A copy of the Solid Waste Handling Permit issued to the supplier by the Jurisdictional Health Department as per WAC 173-350.

h. Supplier verified lab analyses that the Materials comply with the processes, testing, and standards specified in WAC 173-350 and these Specifications. Have an independent STA Program certified laboratory perform the analysis.

i. A list of the feedstock by percentage present in the final compost product.

j. A copy of the producer's STA certification as issued by the U.S. Composting Council: Base acceptance upon a satisfactory Test Report from an independent STA program certified laboratory and the sample(s) submitted to the Resident Engineer.

k. A copy of the approved independent STA Program laboratory test report, prior to initial application of the compost.

l. Manufacture's certification for the geomembrane.

m. Certified test report for the geomembrane showing it meets all listed requirements.

n. Manufacture's certification for the PVC underdrain pipe.

o. Certified gradation test reports for the pea gravel.

p. Provide the Manufacturer's certification for the bentonite clay.

1) Following information about the testing laboratory(ies):

2) Name of laboratory(ies) including contact person(s).

3) Address(es).

4) Phone contact(s).

5) E-mail address(es).

6) Qualifications of laboratory and personnel including date of current certification by STA, ASTM, AASHTO, or approved equal.

1.04 QUALITY ASSURANCE

A. Quality Control: Provide proper quality control measures to ensure compliance with specified requirements. Perform subgrade preparation and the placement of the liner and fill materials under the surveillance of an independent approved testing laboratory technician.

B. Testing Laboratory Qualifications: Approved independent laboratory with a minimum of two (2) years of experience performing this type of work for WSDOT or County DOT.

C. Test Results: Within seven (7) days after completion of the test.

D. The bioretention construction shall be performed by a contractor with experience on a least two projects that required Low Impact construction techniques and have proof of completion of the Washington State Department of Ecology LID Training Modules 3.2.

PART 2 - PRODUCTS

2.01 MATERIALS

A. Geomembrane Liner:

1. Impermeable, UV resistant, with a minimum thickness of 30 mils: Use 40 mils in areas of maintenance access or where heavy machinery must be operated over the membrane.

B. Bentonite:

1. Hydraulic flux: Bentonite, (ASTM D5887) - 1 x 10-8 m^3/m^2 sec.

1. Hydraulic conductivity of bentonite (ASTM D5084) - 5 x 10 -11 m/s.

2. Free swell (ASTM D5890) – 24 ml/2g.

3. Fluid loss (ASTM D5891) - 18 ml.

C. Underdrain Pipe:

1. Underdrain pipe shall be in accordance with AHJ requirements.

2. In the absence of AHJ requirements, Underdrain pipe shall be 6-inch diameter perforated PVC; AASHTO M 278.

D. Overflow Riser or Structure:

1. Install over flow risers per dimensions and details shown in the Issued For Construction Drawings and in accordance with AHJ requirements.

E. Bioretention Soil:

1. Bioretention Soil Mix (BSM) shall be in accordance with Department of Ecology Low Impact Development Technical Guidance Manual for Puget Sound or AHJ requirements.

F. Underdrain Aggregate:

1. Mineral Aggregate Type 26 shall be in accordance with Department of Ecology Low Impact Development Technical Guidance Manual for Puget Sound or AHJ requirements.

G. Compost Material for Bioretention Soil:

1. Compost products shall be the result of the biological degradation and transformation of Type I or III feedstocks under controlled conditions designed to promote aerobic decomposition, per WAC 173-350-220, which is available at http://www.ecy.wa.gov/programs/swfa/compost. Provide compost that is stable with regard to oxygen consumption and carbon dioxide generation. Provide compost mature with regard to its suitability for serving as a soil amendment or an erosion control best management practices as defined below. Provide compost w

ith a moisture content that has no visible free water or dust produced when handling the material. Provide compost whose production and quality complies with Chapter 173-350 WAC, and meets the following physical criteria:

2. Compost material: Tested in accordance with Testing Methods for the Examination of Compost and Composting (TMECC) Test Method 02.02-B meeting the following:

	Fine Compost		**Medium Compost**		**Coarse Compost**	
	Min.	Max.	Min.	Max.	Min.	Max.
Percent passing 2 inch	100 percent			100 percent	100 percent	
Percent passing 1 inch	95 percent	100 percent	95 percent	100 percent	90 percent	100 percent
Percent passing 5/8 inch	90 percent	100 percent	90 percent	100 percent	70 percent	100 percent
Percent passing 1/4 inch	75 percent	100 percent	75 percent	85 percent	40 percent	60 percent

3. Maximum particle length of 6 inches

4. pH: Between 5.5 and 8.0 when tested in accordance with TMECC 04.11-A.

5. Manufactured inert material (plastic, concrete, ceramics, metal, etc.) and less than 1.0 percent by weight as determined by TMECC 03.08-A.

6. Organic matter content must be a minimum of 40 percent dry weight basis as determined by TMECC 05.07A.

7. Soluble Salt Contents: Less than 6.0 mmhos/cm tested in accordance with U.S. Composting Council TMECC 04.10.

8. Maturity: Greater than 80 percent in accordance with TMECC 05.05-A.

9. Stability: 7 or below in accordance with TMECC 05.08-B.

10. The compost product must originate a minimum of 65 percent by volume from recycled plant waste as defined in WAC 173-350 as inch Type 1 Feedstocks. inch A maximum of 35 percent by volume of other approved organic waste as defined in WAC 173-350 as inch Type 2 Feedstocks inch, source-separated food waste, but not including biosolids, may be substituted for recycled plant waste. Provide written supplier verification of feedstock sources.

11. Provide carbon to nitrogen ratio less than 25:1 as determined using TMECC 04.01 and TMECC 04.02D.

12. Require compost supplier to test all compost products within 90 days prior to application. Collect samples using the STA sample collection protocol. The sample collection protocol can be obtained from:

    U.S. Composting Council
    4250 Veterans Memorial Highway, Suite 275
    Holbrook, NY 11741
    Phone: 631-737-4931

www.compostingcouncil.org

13. Send sample to an independent STA Program approved laboratory.

H. Mulch:

1. Mulch layer could be Arborist wood chip mulch or coarse compost in accordance with AHJ requirement.

I. Streambed Aggregate:

1. Streambed Aggregate shall be in accordance with AHJ requirements.

J. Cleanout:

1. Cleanout shall be per WSDOT Standard Plan B-85.40 with marking for DRAIN.

PART 3 - EXECUTION

3.01 PREPARATION

A. Do not start bioretention cell construction until the project site draining to the bioretention area has been stabilized and authorization is given by Resident Engineer. Temporarily divert drainage away from the bioretention cell construction work area as needed to protect the accomplished work until the cell is entirely completed. Construct bioretention cells shown on the Drawings to an accuracy of 0.25 feet in location and 0.08 feet in elevation unless otherwise noted. Report finish grades at all the subgrade points to the Resident Engineer for approval prior to the placement of the geomembrane liner, underdrain pipe and rock, and bioretention soil.

B. Do not operate heavy equipment within the bioretention area during demolition, excavation, staging, subsurface pipe placement, backfilling, or planting. Do not excavate within 6 inches of final native soil grade if the ground is frozen, has standing water, or has been subjected to more than 1/2 inch of precipitation within 48 hours.

C. Remove all material excavated during the construction of the bioretention cells from the site. Disposal of material within the project limits will not be allowed without written approval from the Resident Engineer.

3.02 INSTALLATION

A. Bioretention Cell:

1. Install bioretention cell per dimensions and details shown in the Issued For Construction Drawings and in accordance with the AHJ requirements.

2. Install underdrains as indicated in the Issued For Construction Drawings and in accordance with the subdrainage requirements as required by the Contract.

B. Geomebrane Liner:

1. Place in accordance with the manufacturer's recommendations. Prior to placement, compact and finish smooth and seamless with rounded corners so that the liner will be placed flat and smooth without any wrinkles, warps, or undulations. If seamlessness cannot be achieved, perform water tight seam welding by a factory certified technician according to the manufacturer's requirements. Seal with bentonite, all liner penetrations for catch basins, pipes, etc. having a minimum

depth of 6 inches both above and below the liner edge and extending from 12 inches minimum behind the cut edge of the liner to the penetrating object.

C. Bioretention Cell:

1. Prior to placement of bioretention soil, notify the Resident Engineer to allow an optional inspection of the bioretention cell and top of underdrain bedding, and to observe placement and compaction for consistent uniform depth. If the bedding is not free of fines, remove the contaminated rock and replace with material per design.

2. Protect bioretention soil from all sources of additional moisture at the Supplier's site, in covered conveyance, and at the project site until incorporated into the Work. Do not mix or place bioretention soil if the area receiving bioretention soil is frozen or wet or saturated or when the weather is too wet as determined by the Resident Engineer (3 percent above optimum moisture content), or has been subjected to more than 1/2-inch of precipitation within 48-hours prior to mixing or placement.

3. The Resident Engineer will have final authority to determine if wet or saturated conditions exist. Place landscape bioretention soil loosely. Measure final soil depth and verify only after the soil has been water compacted, which requires filling the cell with water, without creating any scour or erosion, to at least 1 inch of ponding. If water compaction is not an option, measure final soil depth at 3 inches above the grade specified on the plans to allow for settling after the first storm. Calculate final soil depth above specified grade by depth of soil times 0.15 and rounded up to the nearest whole number.

4. When required to provide a testing laboratory, utilize a STA, AASHTO or ASTM or other designated recognized standards organization accredited laboratory with current and maintained certification. Perform all tests to the standards specified and provide test results with an accompanying Manufacturer's Certificate of Compliance.

D. Planting:

1. For planting within the bioretention areas, refer to planting and planting irrigation requirements, as required by the Contract, for plants, plant maintenance, irrigation, restoration and all other related plant and irrigation items.

E. Overflow Riser and Pipes

1. Install underdrains as indicated on the Issued For Construction Drawings. Field locate the exact locations of underdrains within Bioretention Planters and Ponds to avoid conflicts and provide gravity flow, with approval from Resident Engineer and constructed per the details shown in the Issued For Construction Drawings.

2. Install Overflow Riser pipe and pipe as indicated on the Issued For Construction Drawings and connect to underdrains and outfall connection to drainage system. Install the atrium or beehive grate on top of the riser pipe at the overflow elevation, as indicated on the Issued For Construction Drawings.

3.03 CLOSEOUT ACTIVITIES

A. Provide one compaction test in a bioretention area selected by the Resident Engineer, utilize a STA, or ASTM or other designated recognized standards organization accredited laboratory with current and maintained certification. Perform all tests to the standards specified, and provide test results with an accompanying Manufacturer's Certificate of Compliance.

B. If any sediment laden runoff has entered the cell, remove the top 3 inches of bioretention soil and replace with bioretention soil per design.

C. Show the finished elevation on as-built drawings.

END OF SECTION

SECTION 33 71 17

ELECTRICAL MANHOLES AND VAULTS

PART 1 - GENERAL

1.01 SUMMARY

A. Section includes:

1. Requirements for furnishing and installing precast concrete manholes, vaults and handholes as indicated on the Issued For Construction Drawings.

2. Requirements for interfacing with existing serving utility facilities.

1.02 REFERENCES

A. This Section incorporates by reference the latest revisions of the following documents:

1. American Concrete Institute (ACI):

a. ACI 318 Building Code Requirements for Structural Concrete.

2. American Society for Testing and Materials International (ASTM):

a. ASTM C857 Standard Practice for Minimum Structural Design Loading for Underground Precast Concrete Utility Structures.

b. ASTM C858 Standard Specification for Underground Precast Concrete Utility Structures.

3. American Association of State Highway and Transportation Officials (AASHTO):

a. AASHTO Load and Resistance Factor Design (LRFD) Bridge Design Specifications, 2008.

4. Washington State Department of Transportation (WSDOT):

a. Standard Plans.

b. Standard Specifications for Roads, Bridges, and Municipal Construction.

5. Authority Having Jurisdiction (AHJ):

a. Standard plans and specifications.

1.03 COORDINATION

A. Contractor must hold a preconstruction meeting to discuss the approved Construction Work Plan (CWP). The CWP must address hold points, schedule of work, related approved submittals.

B. Prior to commencing any work, Contractor must provide minimum of 30 days notice to schedule meeting(s) with Resident Engineer to discuss the work plan and schedule.

C. Contractor must obtain required permit(s) for the work from AHJ.

1.04 SUBMITTALS

A. Submit:

1. Shop Drawings for fabrication and installation of precast concrete structures and cast-in-place concrete structures showing:

a. Concrete mix design for precast concrete structures.

b. Reinforcing steel design for precast concrete structures including sizes, spacing, placement details, and other information to fully describe the reinforcing system.

c. Cover and frame details for precast concrete structures.

2. Complete materials list of manufactured items proposed under this Section showing:

a. Manufacturers' specifications and product data

b. Demonstrated compliance with these Contract Specifications.

c. Certificates of Compliance for all specified products.

PART 2 - PRODUCTS

2.01 MATERIALS

A. Precast Concrete Handholes and Vaults:

1. Manufacture precast concrete handholes and vaults in accordance with ASTM C858. Construct precast handholes for power per WSDOT Standard Plans J-40.10-04 (Locking Lid Standard Duty Types 1 and 2), and J-40.30-04 (Locking Lid Standard Duty Junction Box Type 8), with the exception that handholes having other dimensions may be required per Issued For Construction Drawings.

2. Design Requirements:

a. Conform to structural design requirements of ACI 318 for reinforced concrete capable of withstanding earth pressures, traffic, lifting and other appropriate loadings recommended in ASTM C857.

b. Design structures located partially or entirely within roadways for live loads of AASHTO HS20-44 Truck loadings plus impact.

c. Design bottoms of concrete structures to be watertight below grade, with preformed butyl rubber gaskets in joints between precast sections.

d. Provide concrete inserts for mounting cable supports, knockouts for conduits, frames, grates, covers, sumps, opening for ground rods, lifting eyes, and other features included with the standard handholes and vaults.

e. Provide risers and adjustment rings as required to position structure at depth to accommodate duct banks, and keep clear of roadway structures.

3. Design Loads:

a. Roof:

1) Dead Load: Self weight plus soil cover.

2) Live Loads: AASHTO HS20-44.

b. Walls:

1) Surcharge Live Load.

2) Unit Weight of soil: 120 pounds per cubic foot (pcf).

3) Coefficient of Active Earth Pressure (Ka) – 0.33.

4) Groundwater at ground surface with vault or handhole empty.

c. Base:

1) Dead load plus hydrostatic uplift pressure acting on base.

2) Live load transmitted to base consisting of the maximum live load imposed on the roof.

d. Buoyancy:

1) Ensure dead weight of structure is greater than 1.1 times the hydrostatic uplift force on the base of the vault or handhole.

B. Frames and Covers:

1. Castings:

a. Tough, closed-grain, ductile iron, smooth, clean and free of blisters.

b. Plane or grind bearing surfaces to ensure flat, true surfaces within ring and cover at all points.

c. Use vented covers that have grate spacing at 5/8-inch maximum.

2. Solid Plate Hatches:

a. Use a slip-resistant cover that meets Utilities Owner Standards:

1) Uniformly disperse the abrasive grit particles in a metal matrix bonded to the substrate by electrical arc process using carbon wire.

2) Verify year of manufacture and material used on underside of hatch in 2 inch weld bead or stamp imprint.

3) Open 180 degrees, spring-assisted, and double locking.

4) Hot-dip galvanized frame and cover after fabrication.

3. Expanded Grate Hatches:

a. Security fasteners must be per common work results for electrical, as required by the Contract.

b. Open 180 degrees, spring-assisted, and double locking.

c. Hot-dip galvanized frame and grate after fabrication.

4. Identification:

a. Cast, imprinted, or welded bead identifying the assigned utility company:

1) On concrete collars surrounding castings and hatches.

2) Submit identification marking plan including type of marking and size for acceptance.

C. Pad for Floor-mounted Equipment: Reinforced, pre-cast, concrete structure at least 4 inches high. Dimensions must be in accordance with the associated electrical equipment shop drawings and Issued For Construction Drawings.

D. Construct power Handhole per WSDOT Standard Plans J-40.10-04 (Locking Lid Standard Junction Box Types 1 and 2), and J-40.30-04 (Locking Lid Standard Duty Junction Box Type 8) and as detailed on the Issued For Construction Drawings. with WSDOT Standard handhole provisions including bolt-down non-skid diamond plate galvanized steel cover having H-20 wheel loading rating for off-street locations not subjected to high density traffic. must

E. Power / Communications Handhole:

1. Handholes must be per WSDOT Standard Plans J-40.10-04 (Locking Lid Standard Junction Box Type 2) and as detailed on the Issued For Construction Drawings with WSDOT Standard handhole provisions including bolt-down non-skid diamond plate galvanized steel cover having H-20 wheel loading rating for off-street locations not subjected to high density traffic. Provide a steel plate divider on these combination handholes. .

F. Ground Rods:

1. 5/8-inch diameter copper-clad steel ground rods, 10-foot long.

G. Vault Sumps:

1. Provide galvanized cover gratings on all vault trench sumps.

H. Pulling Irons:

1. Vaults and Handholes Type 444 and larger: With pulling irons.

2. Vaults Type 712 and larger: With pulling irons rated at 40,000 pounds breaking strength.

3. Provide test result reports for typical vault application.

PART 3 - EXECUTION

3.01 CONSTRUCTION

A. General:

1. Provide the utilities' owners 4 weeks notice prior to the date requested to connect to the existing Vault. Do not enter or connect to existing facilities without pre-approval and onsite supervision of Utilities' Owners workers if required per the Utilities Owner standards.

2. Field cutting will not be allowed without approval. Block out all openings before casting or core drilling.

3. Handling and Erection Stress: Provide additional reinforcing inserts, strong backs, and other features required to ensure vaults remain undamaged during handling and installation.

B. Excavation, Trenching and Backfill:

1. Provide bedding for the precast concrete structures consisting of 4 inches of crushed rock (1-1/4 inch or less) topped with 1/2 inch to 1-1/2 inch of sand.

2. Place granular backfill in compacted lifts around all sides of handholes and vaults. Match finish roadway or sidewalk elevation with finish grade without additional adjustment.

3. Grade locally as required to maintain drainage if finish grade is different than existing grade.

C. Precast Sections:

1. Carefully align and seat precast vault and handhole sections against the butyl rubber gasket to ensure a watertight perimeter seal for all joints.

2. Remove lifting lugs or inserts, wet the recessed surfaces, fill with mortar mixed with polyvinyl acetate, and finish to a smooth surface prior to backfilling.

3. Seal conduit penetrations watertight after installation.

4. Completed precast vaults and handholes to be straight, plumb, aligned, and at correct finish elevation. Match frames and covers to finish grade and slope of sidewalk, planting strip, roadway and other finish surfaces.

D. Ground Rods:

1. Install two grounding rods in all concrete vaults. Install ground rods in opposite corners of vaults.

END OF SECTION

SECTION 34 05 17

TRACK CONSTRUCTION

PART 1 - GENERAL

1.01 SUMMARY

A. Section includes:

1. Requirements for track construction:

a. Ballasted track.

b. Direct fixation track.

c. Embedded track.

d. Special trackwork.

1.02 REFERENCES

A. This Section incorporates by reference the latest revisions of the following documents.

1. American Railway Engineering and Maintenance-of-Way Association (AREMA):

a. Manual for Railway Engineering (AREMA Manual).

b. Portfolio of Trackwork Plans (AREMA Plans).

2. American Association of State Highway and Transportation Officials (AASHTO):

a. AASHTO Standard Specifications for Highway Bridges.

b. AASHTO T 277 Standard Method of Test for Electrical Indication of Concrete's Ability to Resist Chloride Ion Penetration.

3. ASTM International (ASTM):

a. ASTM A36/A36M Standard Specification for Carbon Structural Steel.

b. ASTM A153/A153M Standard Specification for Zinc Coating (Hot-Dip) on Iron and Steel Hardware.

c. ASTM A307 Standard Specification for Carbon Steel Bolts, Studs, And Threaded Rod 60,000 psi Tensile Strength.

d. ASTM A563 Standard Specification for Carbon and Alloy Steel Nuts.

e. ASTM C203 Standard Test Methods for Breaking Load and Flexural Properties of Block-Type Thermal Insulation.

f. ASTM C307 Standard Test Method for Tensile Strength of Chemical-Resistant Mortar, Grouts, and Monolithic Surfacings.

g. ASTM C579 Standard Test Methods for Compressive Strength of Chemical-Resistant Mortars, Grouts, Monolithic Surfacings, and Polymer Concretes.

h. ASTM C827 Standard Test Method for Change in Height at Early Ages of Cylindrical Specimens from Cementitious Mixtures.

i. ASTM C88 Standard Test Method for Soundness of Aggregates by Use of Sodium Sulfate or Magnesium Sulfate.

j. ASTM D149 Standard Test Method for Dielectric Breakdown Voltage and
Dielectric Strength of Solid Electrical Insulating Materials at Commercial Power Frequencies.

k. ASTM D257 Standard Test Methods for DC Resistance or Conductance
of Insulating Materials.

l. ASTM D412 Standard Test Methods for Vulcanized Rubber and Thermoplastic Elastomers – Tension.

m. ASTM D471 Standard Test Method for Rubber Property – Effects of Liquids.

n. ASTM D570 Standard Test Method for Water Absorption of Plastics.

o. ASTM D638 Standard Test Method for Tensile Properties of Plastics.

p. ASTM D6938 Standard Test Method for In-Place Density and Water Content of Soil and Soil-Aggregate by Nuclear Methods (Shallow Depth).

q. ASTM F3125/F3125M Standard Specification for High Strength Structural Bolts, Steel and Alloy Steel, Heat Treated, Inch Dimensions 120 ksi (830 MPa) and 150 ksi (1040 MPa) Minimum Tensile Strength, Inch and Metric Dimensions.

r. ASTM D790 Standard Test Methods for Flexural Properties of Unreinforced and Reinforced Plastics and Electrical Insulating Materials.

s. ASTM D2240 Standard Test Method for Rubber Property – Durometer Hardness.

t. ASTM E10 Standard Test Method for Brinell Hardness of Metallic Materials.

4. American Concrete Institute (ACI):

a. ACI 503.1-503.4 Four Epoxy Standards.

5. Washington State Department of Transportation (WSDOT):

a. WSDOT M 41-10 Standard Specifications for Road, Bridges, and Municipal Construction.

b. WSDOT M 46-01 Materials Manual.

B. Definitions:

1. Anchor Insert: Component of direct fixation track, which is embedded into concrete support, typical metal with threads, to receive anchor bolt.

2. Anchor Plate: A device used in embedded track to secure running rails to concrete slab at the proper track gauge to provide vertical, lateral and longitudinal restraint of the rail.

3. At Grade Road Crossing: The crossing of a railway track and a vehicular roadway at the same elevation.

4. At Grade Track Crossing: The crossing of two or more railway tracks at the same elevation. See Crossing, Diamond.

5. Ballast: An integral part of the track structure, generally composed of graded mineral aggregate, in which ties are implanted.

6. Ballast Mat: Consists of natural rubber with fabric reinforcement designed to minimize ground borne vibration and provide a reduction in the impact on structures or structure-borne vibrations. Ballast mat also reduces the impact load on ballast.

7. Bumping Post: A steel frame device placed at the end of tracks to prevent a moving rail vehicle from rolling off the end of track.

8. Cant, Rail: Inward inclination of the running rail, nominally 1:40.

9. Closure Rails: The rails placed between components of special trackwork units, such as the rails between the switch and the frog in a turnout.

10. Continuous Welded Rail (CWR): A number of rails welded together into a continuous string.

11. Crossing or Crossing Diamond: An assembly of four frogs, connecting rails and guard rails that allow an at-grade railway crossing where two tracks cross or intersect each other requiring special trackwork.

12. Crossover, Single: Two turnouts, with track located between the heels of two (2) frogs and arranged to form a straight continuous passage between two adjacent and generally parallel tracks.

13. Crossover, Double: Two single crossovers with opposite hand that intersect between two adjacent and generally parallel tracks forming connections between each track in each direction.

14. Crossover, Universal: Two single crossovers, which in close proximity and opposite hand between two adjacent and generally parallel tracks forming connections between each track in each direction.

15. Emergency Guard Rail. Main Track - A parallel rail installed inside of the running rail to support a wheel set if it comes off the track.

16. Fastenings: A general term applied to a device used to restrain the rail in place and include such parts as shims, fastener body, anchor bolts, inserts, spring clips, insulators, etc.

17. Fastener, Direct Fixation: A bonded plate-type assembly to hold the rail in place and ensure a proper rail cant on a concrete support, where elastomer is vulcanized

(bonded) to the top steel plate and, in most designs, to a bottom steel plate. Fasteners are either standard or high resilient depending on the stiffness.

18. Frog: A track device used at the intersection of two running rails to provide support for wheel treads and passageways for wheel flanges, thus permitting wheels traversing either rail to cross the other rail.

19. Frog Number: The number used to designate the size of a frog, and being equal to one-half the cotangent of one-half the frog angle or the number of units of centerline length when the spread N is one unit.

20. Gage or Track Gage: The distance between the inside faces of running rails of a track, measured at a point 5/8-inch below the top of rail. The standard gage distance shall be 4-feet 8-1/2-inches.

21. Guard Rail, Main Track: A parallel rail installed inside of the running rail to support a wheel set if it comes off the track. See Guard Rail, Special Trackwork and Restraining Rail.

22. Guard Rail, Special Trackwork: A parallel rail or support installed inside of special trackwork to hold wheels on the correct alignment and preventing the wheel flanges from striking the points of turnout or frog.

23. High Strength or Premium Rail - Rail having greater Brinell hardness than standard strength rail for use at locations of higher rail wear.

24. Inside Rail: On curved track, the rail nearest to the curve center; the rail with the shorter radius. Also referred to as the "low rail".

25. Joint Bar: Device used to join the abutting ends of two rails of the same cross section.

26. Joint Bar, Compromise: A joint bar used to connect two rails of different cross sections.

27. Joint Bar, Insulated: Joint bar used to arrest the flow of electric current between two rails. Standard types are bonded and nonbonded.

28. Outside Rails: On curved track, the rail farthest from the curve center; the rail with the longer radius. Also referred to as the "high rail".

29. Pedestrian Crossing: The crossing of a railway track and a pedestrian sidewalk at the same elevation.

30. Plinth: Raised concrete structures that support the tracks.

31. Profile Grade Line (PGL): The datum line that defines the vertical alignment of the track, applied at the centerline of track at the top of the rail elevation on tangent track and the top of the inside (low) rail elevation on curves.

32. Rail Anchor: A device that clamps to the base of a rail and bears against the side of a cross tie to restrain longitudinal movement of the rail.

33. Rail Seat: The area of a direct fixation fastener or a tie on which the base of the rail rests.

34. Rail, Tee: Common class of steel rail design symmetrical in section and resembles an inverted letter "T."

35. Restraining Rail: A fabricated rail installed parallel on the inside of the running rail (or both running rails) of small radius curved track to reduce wear on the running.

36. Running Rails: Support rails of a track on which the vehicle wheel tread contact and travel.

37. Shim, Fastener – HDPE plates that are placed underneath rail fasteners to isolate the fastener and also to adjust rail vertically as needed to match PGL.

38. Shim, Emergency Guard Rail – HDPE plates that are placed underneath the emergency guard rail base plate to adjust vertically as needed to match required top of guard rail elevation relative to the PGL.

39. Screw Spikes: A threaded fastener for ballasted track construction that secures tie plates and special trackwork plates to timber crossties and switch ties.

40. Special Trackwork: Special trackwork is any track that is built in whole or part using rails that are machined, bent, curved, or otherwise modified from their as-rolled condition; plus any additional track appliances that may take the place of rails in supporting and guiding the wheels; plus miscellaneous appliances that may be attached to the rails to fulfill the functions required; are considered to be special trackwork.

41. Stock Rail: A switch component consisting of a piece of rail with an undercut rail head allowing the tapered switch point rail to mate against it.

42. Subballast: A material superior in composition to the subgrade material that provides a semi-impervious layer between the track ballast and the subgrade to provide better drainage and distribution of loads to the subgrade.

43. Subgrade: The finished embankment or excavation below the level of subballast.

44. Superelevation: In curved track, the amount that the outside rail is raised above the inside rail. The inside rail elevation is maintained at the PGL top of rail profile.

45. Switch or Point of Switch: The tip of the tapered end of a switch point rail; the end of a switch rail farthest from the frog.

46. Switch Point, Switch Rail: The fabricated movable point rail of a split switch.

47. Switch, Undercut: A switch in which the stock rails are undercut to mate with or nest the switch rails so that the actual point of the switch rail head does not protrude beyond the original outline of the stock rail's head outline, commonly called a Samson Undercut or AREMA Detail 5100 switch point.

48. Tie or Cross Tie: Portion of track structure placed in ballast perpendicular to rail to hold track gauge and rail alignment.

49. Top of Rail (T/R, or TOR): Portion of the running rail that follows the PGL. Top of rail elevation is measured at the centerline of the rail.

50. Track, Ballasted: Track constructed of ballast, crossties, tie plates, rails and fastenings.

51. Track, Direct Fixation: Track constructed of concrete slab or plinth, rails and fastenings. Rails are connected to the concrete with fasteners, anchor bolts and anchors.

52. Track, Embedded: Track intended for joint usage with roadway vehicle traffic, with rails electrically isolated and at the same elevation as roadway surface.

53. Track Foot: Unit of measurement for all types of track construction; measured along the centerline of track.

54. Track, Main Line: Revenue service tracks designated by route name and direction.

55. Track, Tail: Track beyond a terminal station that accommodates space for train layover requirements, train staging for special events and failure management.

56. Track, Shop: Track constructed within the Maintenance Facility building or perimeter aprons, generally direct fixation track, embedded track or open track supported across vehicle service pits.

57. Track, Storage: Are non-revenue tracks, the function of these tracks are low volume storage and/or light maintenance.

58. Track, Yard: Tracks within a yard for the purpose of switching, storing, or maintaining numerous light rail vehicles.

59. Track Slab: The reinforced concrete foundation that supports the track, generally in conjunction with embedded track, shop track, and at-grade direct fixation track.

60. Transition Slab: A reinforced concrete slab located at the junction of ballasted track and direct fixation track or embedded track to provide a transition between ballasted track construction and other types of track that have significantly different track modulus.

61. Turnout: A track arrangement consisting of a switch, frog, stock rails, closure rails, and guard rails enabling rail vehicles to be diverted from one track to another.

62. Turnout Number: The number corresponding to the number of the frog used in a turnout.

63. Zero Thermal Stress, or Neutral Temperature: Rail temperature at which the rail is neither in tension nor compression.

1.03 SUBMITTALS

A. Submit:

1. Work Plan: Submit Work Plan for all track construction organized by track construction type:

   a. Submit the Work Plan prior to the commencing mock-up (demonstration section) construction activities.

   b. Prepare, sign and seal Work Plan by a qualified State of Washington registered Professional Engineer.

   c. Work Plan shall include the following information, or by reference, at a minimum:

      1) Proposed alignment survey control plan, including personnel, approach, and equipment.

         a) Submit actual alignment and profile survey control and construction coordinate network (points, northing, easting, and elevation).

2) List of construction tools and equipment to be used during the track construction, include construction equipment data (i.e. - height, width, length, weight) and loading diagrams.

3) Step by step construction sequence, detail means-and-methods and hold points for each construction sequence.

4) Hold points must define quality control checks for physical inspection of a completed work prior to progressing to the next work step. At minimum, hold points must include, track skeletonization, mock-up demonstration, slump testing and inspections.

5) Material handling procedure, including tie, subballast, ballast, CWR, track panel, and special trackwork.

6) Special equipment and tools, including specs, O&M manuals, and calibration certificates with the acceptance.

7) Documents of forms and jigs to support the track construction including ties, fasteners, and anchor inserts.

8) Layout of concrete plinth with the dimensional distribution of fasteners on it

9) Concrete placement approach to forming, placing, finishing, and curing of track concrete, including drilling, grouting and reinforcement installation.

10) Rail fastener installation with anchors inserts, including the anchor bolt installation torque and the sequence of shimming and applying spring clips in accordance with the Supplier's instructions.

11) Rail Destressing Requirements:

a) Destressing tools and equipment.

b) Step by step destressing procedure, and detail means-and-methods.

c) Detailed rail hold points:

i) Special trackwork cannot be destressed.

ii) CWR string lengths to be adjusted for rail destressing should be no less than 400 feet and no more than 1600 feet in each direction.

iii) Rail mark locations including for rail cut or separation, rail anchor installation.

iv) Verify proper rail gap is reserved before pulling, heating, and destressing.

v) Verify rail destress weld locations are satisfied with distance requirements away from existing welds/joints, crossing, special trackwork, concrete tie and plinth, etc.

12) Field Testing and Inspecting to verify tolerances.

13) Rail end-hardening procedure and testing, including a list of qualified personnel who will perform the end-hardening and testing in the field.

14) Method for developing, documenting, and transmitting, CWR laying records, and includes field CWR welding records.

15) Documents showing the proposed method for clamping the rail for embedded track during installation of concrete track base slab (1st pour) and/or elastomeric grout of embedded track.

16) Rail grinding equipment, method of operation.

17) Proposed staging areas for rail.

18) Method of transporting rail.

19) Required rail temperature record forms for rail laying and rail fastening operations.

2. Plinth Layout:

a. Track slab elevation and offset survey with computer generated spreadsheets indicating the precise as-built concrete slab conditions.

b. Plinth layout and fastener spacings.

3. Track Alignment Survey Report:

a. Must show the conformance to construction tolerances.

b. Provide survey data in tabulated tables.

c. Include stationing, northing, easting, and elevation for each survey location.

d. Horizontal alignment tolerances must be shown as positive values for lateral shifts to the right.

e. Vertical alignment tolerances must be shown as positive values for elevations above the design elevation.

4. Track Geometry Survey Report:

a. Must show the conformance to the construction tolerances.

b. Distill the raw output from the track alignment survey data. Delete false exceptions (such as “wide gauge” immediately ahead of a frog point) and supplement the raw output with manually collected data where taken.

c. Present all survey data in strip charts.

d. The strip chart shall show track stationing and milepost.

e. Each measurement in the strip chart must provide a baseline and tolerance lines. The strip chart must have a resolution that can show the tolerances.

f. Provide a tabulated table of the survey data collected and reflected in the strip charts.

5. As-built Special Trackwork Survey Report:

   a. Provide all survey data showing Location, Stationing, Guage and cross level.

6. As-built Station Platform Survey Report:

   a. Provide all survey data in tabulated tables with stationing, elevation and offset.

B. Transmit:

1. Qualification Documents and Statements: Transmit documentation pertaining to conformance of the requirements. Document shall include Supplier's certification that furnished products meet requirements.

2. All test results as required, including electrical resistance test results, direct fixation insert tests, subballast and ballast gradation tests, aggregate and soil compaction tests.

3. Provide to Sound Transit, six (6) rail thermometers, equal to those being used by the Contractor to measure rail temperature:

   a. Use reliable AREMA standard rail thermometers as specified in the AREMA Manual for Railway Engineering, Volume 1, Chapter 5 Track, Part 6 Specifications and Plans for Track Tools.

   b. Deliver six (6) rail thermometers, acceptable to Contractor's QC Representative and identical to those to be used by the Contractor, to Contractor's QC Representative prior to laying any rail.

1.04 QUALITY ASSURANCE

A. Mock-up (Demonstration Section):

1. Construct one (1) demonstration section for each track construction type a minimum of 30 days prior to the scheduled beginning of main line track construction:

   a. Using the approved workplan, construct the demonstration section to the length of at least one complete production or construction cycle but not less than 150-feet. If the demonstration section does not meet the requirements as specified in the Contract Documents, submit a revised Work Plan and construct another demonstration section or sections as required.

   b. Demonstration section can be part of permanent track as long as the contractor gets the approval from Sound Transit in advance and the demonstration section satisfies all requirements. If the demonstrated section fails, the teardown and reconstruction of the demonstration section must not damage the track bed and any nearby structures. In the case of damages, the contractor will be responsible for repairing the damages and reconstructing the demonstration section at no cost to Sound Transit.

   c. Each new crew must construct their own demonstration section before production.

B. Construction Tolerances:

1. Track Geometry:

a. Track geometries, including track gauge, cross level, horizontal and vertical alignments, need to be constructed within the tolerances in the following table:

Track Geometric Construction Tolerances

Type of Track	Gauge Variation(2) (Inches)	Cross Level and Superelevation Variation (6) (Inches)	Horizontal Alignment Tolerance (1)(6) (Inches)	Vertical Alignment Tolerance (1)(6) (Inches)
Direct Fixation and Embedded	Plus or Minus 1/8-inch	Plus or Minus 1/8-inch	Plus or Minus 1/8-inch (3)	Plus or Minus 1/8-inch (4)
Ballasted, Main Line	Plus or Minus 1/8-inch	Plus or Minus 1/8-inch	Plus or Minus 1/4-inch (3)	Plus or Minus 1/8-inch (4)
Ballasted, Yard/Maintenance	Plus or Minus 1/8-inch	Plus or Minus 1/8-inch	Plus or Minus-1/2-inch	Plus or Minus 1/2-inch

Notes:

1. The tolerance is measured between theoretical alignment and actual constructed track position.
2. Gauge variation must not exceed 1/8-inch in 15 feet.
3. Tolerance (horizontal) in station platform areas: 1/4-inch away from platform; 0-inches toward platform.
4. Tolerance (vertical) in station platform areas: Plus 1/8-inch, minus 1/4-inch.
5. Tolerance at top of rail to adjacent concrete: Plus 1/4-inch, minus 1/8-inch.
6. A middle ordinate check must be performed in addition to variation and tolerance. The middle ordinate in a 31-foot chord must not exceed 1/8” for constant Cross level, superelevation in spiral, Horizontal alignment, and Vertical alignment.

PART 2 - PRODUCTS

2.01 MATERIALS

A. All track construction materials shall be new, free from any injurious defects, except as specified herein.

B. Furnish all track construction materials and incidental materials required, and spare materials that shall be required, for complete construction of track.

2.02 INSPECTION OF MATERIALS

A. Furnished materials and products shall be presented for inspection at the place of manufacture.

B. Afford the Resident Engineer access and free entry without charge, to the manufacturer’s plants and necessary facilities to examine the Work, during normal working hours, as well as the finished product, to ensure that the materials and products comply with the Contract Documents and Contract Drawings. Examination of the products is expected to take place during normal working hours.

C. Materials and products for inspection shall be presented in a safe area away from excessive noise and manufacturing activities. The manufacturer shall assemble special work on a true horizontal and cross leveled surface. The special work shall bear evenly at all points of contact for fabrication and inspections.

D. Present to the Resident Engineer written notice for need of inspection a minimum of 30 days in advance, for scheduling purposes of the inspection, and prior to scheduled delivery. Contractor shall be responsible for additional travel costs associated with any cancellation or rescheduling of inspections initiated by the Contractor.

2.03 EQUIPMENT

A. Track gauge, guard rail, flangeway width, curve radii, rail sections, and special trackwork components are designed for Sound Transit Light Rail Vehicle operation. Modify on-track equipment for operation over the track from potentially derailing the equipment and without causing damage to the rail, fasteners, track structure or trackwork.

B. Track geometry survey equipment:

1. The track survey measurement parameters, ranges and measurement tolerances shall be as follows:

a. Track Gauge +/- 0.03125 Inches

b. Rail Profile – both rails +/- 0.03125 Inches

c. Track Alignment – both rails +/- 0.0625 Inches

d. Track Cross Level and Superelevation +/- 0.03125 Inches

e. Track Twist +/- 0.0625 Inches

f. Track Warp +/- 0.0625 Inches

g. Curvature +/- 15 Minutes

h. Cant +/- 15 Minutes

2. The track geometry survey equipment must be able to analyze the track geometry data to produce 31’ chord measurements.

PART 3 - EXECUTION

3.01 GENERAL

A. Construct track in accordance with the Work Plan, demonstration section and applicable requirements.

B. Prior to placing on-track equipment on newly laid rail, secure the rail in a manner that will prevent damage to the rail and other track materials.

C. Move on-track equipment over partially secured track in a manner that prevents damage to structures and trackwork materials.

3.02 ALIGNMENT SURVEY CONTROL DATA

A. Alignment information shown on the Contract Documents refers to geometric control points for the track.

B. Engineering stationing is used to reference geometric control points. Independent stationing will be used for each track.

C. Mathematized centerline alignment data for each track is included on the Contract Documents.

3.03 TRACK GEOMETRY REQUIREMENTS

A. Construct track to conform to the alignment and profile data, geometry, and tolerances.

B. For tangent track the alignment is based on each centerline of track, equidistant between the gauge sides of the running rails.

C. For curved track, the alignment is based on the centerline of track with the outside rail located 2-feet 4 1/4-inches radial from the centerline measured at the gauge line of the rails.

D. Track gauge:

1. Track gauge shall be 4-feet and 8-1/2-inches, measured 5/8-inch below top of rail plane and perpendicular to the rail.

2. Special trackwork track gauge shall be as indicated on the approved Technical Data.

E. Rail Cant:

1. Rail cant at 40 to 1 must be built between a rail cant of 30 to 1 and 50 to 1.

F. Superelevation:

1. Track superelevation shall be accomplished by maintaining the inside or low rail of the curve at top of rail profile grade line elevation and rotating the outside or high rail to the raised position developing a superelevated top of rail plane equal to Ea, except for reverse curves. Reverse curve superelevation shall be accomplished as indicated on the Contract Drawings.

2. The superelevation at the tangent-to-spiral (TS) point shall be zero and shall increase uniformly through the length of the spiral to the full elevation of the outer rail at the spiral-to-curve (SC) point, unless otherwise specifically noted and shown on the Contract Documents. Provide spiral and superelevation at the ends of simple curves and segments of compound curves.

3. Turnouts, crossovers and special trackwork shall not be superelevated.

4. Superelevation tags/markers shall be installed to mark the beginning and ending points of superelevation and at every 1/4-inch increment of superelevation between the beginning and ending points of the spiral and superelevation transition.

a. For superelevation tags/markers, use material indicated and conform to the applicable provision of WSDOT Standard Specification Section 9-26.

1) All superelevation tags/markers to be corrosion resistant metal such as brass, aluminum, stainless steel, or approved equal, minimum 18 gauge.

2) Markings on the tags/markers to be either pressed or stamped with characters a minimum height of 1/4-inches and 1/2-inches of separation to edges.

b. Bonding tags/markers to concrete must use mechanical methods as follows:

1) All mechanically-bonded metal tags must be read in the direction of increasing stationing.

2) For concrete tie track:

a) Where the high-rail plinth does not have an EGR, the tag shall be placed approximately one (1) foot from the inside edge of the high rail.

b) Where the high rail has an EGR next to it, the tag shall be placed approximately six (6) inches inside the EGR base edge towards the track center.

3) For Direct Fixation Track:

a) Where the high-rail plinth does not have EGR, the tag shall be placed approximately one (1) inch from the inside edge of the high rail plinth.

b) Where the high rail has a EGR next to it, the tag shall be centered in between the edge of the plinth and the edge of the EGR.

5. Track curve information shall be as indicated on the Contract Documents. Shop-Curved rail shall be pre-marked by the Manufacturer for proper installation by the Contractor.

G. Track Surface:

1. Provide a uniform profile consisting of straight gradients connected by vertical curves, with zero cross level on tangents and predetermined cross level on curves.

2. Track surface is the relationship of both rails opposite each other in profile and cross level. Track profile is the running surface along the top of the rails. Cross level is the difference in elevation between the top of heads of opposite rails measured at right angles to the track alignment.

3.04 BALLASTED TRACK

A. Placement of Subballast:

1. Preparation:

a. The subgrade to receive subballast course, immediately prior to subballast spreading, shall conform to the compaction and elevation tolerances specified. Additionally, subgrade shall be free of standing water and loose or extraneous material with top shedding water slope satisfied to the design.

2. Installation:

a. Spreading of Material:

1) Deliver aggregate for subballast as uniform mixture and spread in layers without segregation.

2) Any subballast stockpiled on site shall not be contaminated with underlying material when removed and placed in the final location.

3) Provide subballast material free of large and fine material pockets. Remix segregated or poorly distributed materials until uniform.

4) Moisture-condition subballast material to near optimum moisture content.

5) Subballast 6-inches and less in compacted thickness can be spread and compacted in one (1) layer. For compacted thicknesses greater than 6-inches, spread the subballast and compact in two (2) or more layers of uniform thickness not greater than 6-inches each.

b. Compaction: Each layer of compacted subballast material shall be not less than 95 percent of the standard density determined by WSDOT Materials Manual, Test Method T 606.

1) Thickness of finished subballast course shall not vary more than 1-inch from the indicated thickness at any point. Reshape or re-work, water, and recompact subballast to achieve compliance with specified requirements that does not conform to this requirement.

3. Inspection:

a. Subballast is subject to inspection and testing by the Resident Engineer at any time between quarry production and acceptance of track.

4. Field Quality Control:

a. The Contractor shall perform tests in accordance with ASTM D6938 to determine compliance with specified requirements for density and compaction of subballast, and to determine moisture content of the installed subballast at no additional cost to Sound Transit.

b. The Contractor shall provide a minimum of one (1) sieve analysis of fine and course aggregates for every 5,000 tons of subballast delivered to the jobsite to ensure uniformity and conformance with the requirements. Conduct sieve analysis for gradation in accordance with WSDOT Materials Manual T 27/T 11.

c. During subballast installation, if the source of subballast changes, the Contractor shall perform tests and inspections on the subballast from the new production site in accordance with the requirements. The subballast shall have the same classification, quality, and gradation as the former subballast used.

d. Contractor shall string line the subballast with the Resident Engineer for subballast acceptance prior to placement of ballast.

B. Placement of Ballast Mat:

1. Preparation:

a. Prior to placement of ballast mat the concrete base slab shall be free of debris and any damage.

2. Installation:

a. Contractor to install ballast mat per manufacturer specifications and Contract Documents.

C. Placement of Waterproofing:

1. Preparation:

a. Prior to placement of waterproofing the concrete shall be free of debris and any damage.

2. Installation:

a. Waterproofing to be placed, installed, and tested as part of waterproofing on ballast bridges requirements.

D. Placement of Ballast:

1. Preparation:

a. Before placing ballast, verify that all designed structures underneath or inside of ballast bed are installed, such as ballast mat, utilities, and drainage pipes, if any.

b. Prior to placement of ballast, rutting and other damage to the subballast, ballast mat, or waterproofing, shall be corrected by the Contractor at no additional cost to Sound Transit.

2. Installation:

a. Uniformly distribute a base layer of ballast over the subballast, ballast mat, or waterproofing and compact before tie distribution.

b. The initial ballast layer shall not be less than 4-inches and no more than 6-inches.

c. The top of the initial ballast layer shall be a level, flat plane and uniformly compacted surface prior to cross tie distribution.

d. Limit the top of final base layer to 3 inches below final elevation of tie bottom and ready to be compacted without further shaping.

e. Compact each ballast layer (lift) with not less than three (3) passes of a vibratory roller of gross weight not less than 5,000 pounds, a drum not less than 58-inches wide and not less than 42-inches in diameter. The vibration frequency shall be between 1,100 and 2,000 vibrations per minute and shall impart a dynamic impact of not less than 9 tons. Avoid damage to existing facilities including tracks, sub-drains, stub-ups, conduits, ballast mats and other structures.

3. Inspection:

a. Ballast is subject to inspection and testing by the Resident Engineer at any time between quarry production and acceptance of track.

4. Field Quality Control:

a. Ballast production tests and sample inspection:

1) Provide the following ballast production test reports and ballast sample for every 1,000 tons of ballast.

a) One (1) Gradation Sieve Analysis in accordance with WSDOT Materials Manual T 27/T 11.

b) One Sulfate Soundness test in accordance with ASTM C88.

b. During ballast installation, if the source of ballast changes, the Contractor shall perform qualification. The ballast shall have the same classification, quality, and grading as the former ballast used.

E. Placement of Cross Ties:

1. Handle, transport and store cross ties in accordance with the AREMA Manual, Chapter 30, Part 4.

a. Use only approved lifting devices that will not damage the tie.

b. Transport cross ties in a horizontal position and brace to prevent movement that could cause damage.

2. Distribute and properly space ties on the compacted base layer of ballast. Space cross ties within +/- 1 inch of distance indicated below.

a. Concrete cross ties shall be spaced 30 inches on center, except as noted below and the Contract Documents, measured at centerline of track or high outside rail on curves. Tie placement frequency shall be no less than 40 ties per 100 feet of track construction, non-cumulative.

b. In curved track with radius equal to or less than 1,000 feet, concrete cross ties shall be spaced 27 inches center to center, measured at high outside rail. Tie placement frequency shall be no less than 44 ties per 100 feet of track construction, non-cumulative.

c. Adjacent to platforms concrete cross ties shall be spaced 24 inches center-to-center, measured at centerline of track. Tie placement frequency shall be no less than 50 ties per 100 feet of track construction, non-cumulative.

d. At transitions of track construction types, concrete cross ties shall be spaced, as specified on the Contract Drawings.

3. Transport switch ties to the job site, where the ties shall be distributed and properly spaced.

F. Surfacing and Aligning:

1. After the placement of rail and ties, place ballast in the tie cribs and shoulders of the track structure to restrain movement of the ties due to temperature changes in

the CWR. Unload ballast in sufficient quantities that will form a high shoulder and will fill the tie cribs and provide an adequate amount of ballast for the initial track lift, plus a surplus as required to continue to hold the track in line after the initial track lift.

2. Track surfacing shall be by methods that will prevent undue bending of the rail, straining of the track joints, and damaging or loosening the spring clips or fasteners. The amount of track lift shall neither exceed 4-inches nor endanger the horizontal and vertical stability of the track. The track shall be raised so that a final lift shall not be less than 1-inch or more than 3-inches when bringing the track to the final surface. Complete final surfacing and aligning of the track after the track has been initially surfaced and aligned, fastened, and joined together by specified method.

3. Place emergency guard rail after completion of final tamping, surfacing, and lining operation.

4. After the track has been finally raised, lined and surfaced, the rails shall be refastened within the specified zero thermal stress temperature range. Spring clips, insulators, and rail pads shall be thoroughly cleaned of dust, dirt, and grindings prior to refastening of rail. Ties damaged during surfacing operations shall be replaced.

5. The final track dressing shall fill cribs and shoulders with ballast to within 1-inch below the base of rail. Provide a minimum of 1-inch clearance between metallic portions of the track structure and ballast.

6. Discontinue surfacing when the ambient temperature is higher than 95 degrees Fahrenheit or the rail temperature exceeds 105 degrees Fahrenheit.

7. Perform tamping with a 16-tool squeeze-vibratory type power tamper. Control of the power tamper's tamping cycle shall ensure the maximum uniform compaction of ballast around the track. Uniformly tamp ballast under both sides of each tie, directly under each running rail for a distance of 18-inches on both sides of the rail. Tamping will not be permitted at the center of the tie, but fill the cribs with ballast. For each tie, proceed with tamping simultaneously inside and outside both running rails on both sides of the tie.

8. Compact ballast shoulders with a vibratory shoulder compactor. Continue compacting until the ballast is firmly interlocked and the surface is true and unyielding, displaying no deformation or movement under the compaction equipment. Protect rail track components, track walls, foundations, trench drains, utilities, drainage structures, and systems or electrical conduit from damage during tamping and compaction.

9. Place and compact infill ballast at walkways.

10. Place and compact infill ballast throughout the entire ballasted track area producing a level and uniform ballast surface.

11. Do not construct paved service aisles, access roads, or track crossings until the final surfacing and lining of the track has been completed.

G. Track Crossings:

1. Construct track crossings.

3.05 DIRECT FIXATION TRACK

A. Prepare concrete plinth layout:

1. Survey track slabs to receive concrete plinths. Survey the top of track slab at edge of each plinth at five-foot intervals.

2. Prepare plinth layout plans that show:

   a. Fastener spacing

   b. Plinth Gap

   c. Length of plinth

   d. Location of expansion joints, ductbanks, drainage, walkway, plinth gap, and system junction box

B. Concrete Plinth:

1. Prepare the base concrete surface to receive the concrete plinth as a construction joint, using high-pressure water blast or other approved method. In the interval between installing coated bars and concreting the plinth, protect the coating from damage that might result from other construction work. Follow the concrete specification for preparing concrete surface roughness needed for concrete plinth construction. The roughed concrete surface must have at least a full amplitude of 1 /4-inches.

2. Repair slab/deck dowels where existing coatings are damaged, cracked or chipped. Replace slab/deck dowels that are beyond plinth locations, too high or too low to provide the required connection of concrete plinth.

3. Construct formwork and place reinforcing steel, direct fixation fastener or high resilient fastener inserts, and cast-in-place concrete with concrete compressive strength of 4,000 psi or higher.

4. For each constructed concrete plinth edge, use a 1/2-inch radius tool edge or 3/4-inch chamfered edge.

5. Cure concrete plinth with standard waterproof compound or damp burlap.

C. Concrete Anchor Insert Assemblies:

1. Cast direct fixation fastener or high resilient fastener anchor bolt inserts, restraining rail fastener anchor bolt inserts, and rail anchor insert bolt into concrete to the required spacing as shown and in accordance with the Contract Documents, approved Technical Data, and the following:

   a. Clean all anchor inserts so that they are free of loose scale, grease, or other foreign matter.

   b. Use top-down construction or templates to accurately locate fasteners and anchor inserts, and anchor bolts. Positively secure the anchor inserts and bolts against displacement during concrete placement. Place inserts flush with top of concrete to plus zero-inch or minus 1/16-inch tolerance.

   c. Subject direct fixation fastener or high resilient fastener anchor inserts to the following tests conducted during the construction period at the rate of four (4) inserts per 500 inserts. Randomly select inserts to be

tested. Select and test at least four (4) re-installed inserts when the total is less than 100, and five (5) re-installed inserts within a group of 100.

1) Restrained Pull-Out Test: Place a 5-inch by 5-inch by 1/2-inch steel plate with a hole in the center 1/4-inch larger in diameter than the insert top collar over the insert. Install an anchor bolt and apply an upward vertical load of 20,000 pounds bearing against the steel plate. Then release the load. Verify there is no evidence of slippage or cracking of concrete or failure of bond between the insert, grout, and concrete.

2) Unrestrained Pull-Out Test: Install an anchor bolt in the insert and apply an upward vertical load to the bolt of 7,500 pounds in such a manner that no vertical load is applied to the plinth concrete within a radius of 6-inches from the centerline of the insert. Then release the load. Verify there is no evidence of concrete cracking or failure of bond between the insert, grout, and concrete.

3) Torsion Test: Subject each of the four (4) inserts to 4400 foot-pounds of torque. Verify there is no evidence of failure of the bond between the insert, grout, and surrounding concrete.

4) Should any insert fail to meet the above tests, test four (4) additional inserts from the same 500 insert group. Failure of any of these inserts to pass the tests shall signify that the installation procedure is defective and 100 percent of the remaining lot shall be rejected. Perform additional tests as specified above and other tests as required on concrete and other materials associated with anchor insert installation to determine cause of defective installation. Do not proceed with further insert installation Work until cause of failures has been determined and a modified procedure ensuring satisfactory installation is established. Perform remedial work as described above at no additional cost to Sound Transit.

d. Replace or repair damaged inserts using an epoxy coating procedure in accordance with Supplier's instructions.

e. Finish the concrete plinth surface under the direct fixation fastener in conformance to ACI 301 Trowel Finish free from voids and other defects. Verify that concrete surface is at the indicated longitudinal and cross slopes to tolerances shown on the Contract Documents.

f. To protect the anchor inserts upon removal of forms or supports, install a plastic plug in each insert to seal each hole.

g. Protect installed track, drainage facilities, and systems or electrical conduits from damage and plugging.

D. Direct Fixation Rail Fasteners:

1. Install direct fixation rail fasteners that are undamaged, clean and free of dirt, mortar, and other substances that could reduce performance or electrical insulation.

2. Install a single HDPE shim to separate the rail fastener from the concrete plinth surface. Install additional shims to the rail fastener to conform to the track

alignment tolerances, and to compensate for differential elevations between adjacent concrete bearing surfaces.

3. Standard and high-resilience direct fixation rail fasteners incorporate a lateral adjustment that allows a movement of plus or minus 1/2-inch in 1/8-inch increments. This adjustment is included to facilitate alignment of the rails during construction and maintenance of the tracks. The lateral adjustment for direct fixation rail fastener shall be set in the center position, do not use more than plus or minus 1/4 -inch of this adjustment during track construction. Shift shims to seat directly under the fastener.

4. Set bolts with calibrated wrenches according to the bolt tension values in accordance with Supplier's instructions:

    a. Calibrate the wrenches by tightening, in a device capable of indicating actual bolt tension, not less than three (3) typical bolts from each lot to be installed.

    b. Power wrenches shall be set to stall or cut out at the selected tension. If manual torque wrenches are used, note the torque indication corresponding to the calibrating tension and use in the installation of all bolts of the tested lot. Measure torque on nuts or bolts while in tightening motion.

5. Distribute and install direct fixation fastener or high resilient fasteners on the concrete plinths:

    a. In Tangent Track:

        1) 30-inches center to center measured at the centerline of track.

        2) Directly opposite each other with an offset tolerance of plus or minus 1–inch.

    b. In Curved Track:

        1) Dependent upon the curve radius, space the direct fixation fastener in 24-inches, 27-inches or 30-inches center to center measured at the high outside rail.

        2) Radially opposite each other with an offset tolerance of plus or minus 1–inch.

    c. Fastener spacing adjustment:

        1) The fastener spacing must be adjusted at structure joints, signal openings plinth gaps and other obstacles.

        2) Fastener adjustments to spacing are from 19-inches to 31-inches center to center.

        3) Fastener spacing adjustments must be done equally over four adjacent fasteners.

3.06 EMBEDDED TRACK

A. General:

1. The construction of embedded track involves the following two types of installation for embedded rail:

a. Midblock embedded track construction using leveling beams assembly complete with welded anchor plates with weld-on shoulder and clips for fixation and utilizing rail boot and cuff for insulation. This type of embedment is typical for tracks running alongside or center of the road at location midblock between road intersections.

b. Road intersection embedded track construction using elastomeric grout and precast concrete filler blocks for fixation and insulation. This type of embedment is typical for embedded tracks crossing road intersections.

2. The construction of embedded track shall include but not be limited to the following:

a. Construction of rail concrete track base slab (1st pour) and surface concrete infill slab (2nd pour).

b. Hauling construction materials.

c. Welding of 115 RE rail for continuous welded rail (CWR) construction.

d. Installation of track drains and trackway drain.

e. Construction of the two types of embedded tracks.

3. Electrical Circuits: Openings through the track concrete for electric wires shall be formed with PVC electrical conduits in accordance with applicable requirements as stated elsewhere in the Contract Documents.

B. Concrete Track Slab Construction:

1. The concrete track slab surface for embedded track shall be to an acceptable profile grade line elevation and located as indicated from the top of rail profile and grade on the Contract Documents.

2. Holes for drainage and electrical conduit openings shall be sealed if required using elastomeric grout or approved equal, around the conduit to provide a complete insulating barrier.

3. The elevation of the top of the concrete tolerance shall be as specified herein.

4. Slab penetrations, blockouts, and surface modifications for drainage structures, boxes and conduits shall be as shown on the Contract Documents.

5. Personnel who have responsible charge of the Work shall conduct the inspection. Defects in the base material shall be corrected prior to placement of the concrete track slab.

6. 1st pour concrete track base slab shall have a broom finish except for smooth trowel finish in some locations as shown on the Contract Documents. 2nd pour surface concrete infill slab shall be stamped and shall have skid resistant finish.

7. Expansion joints shall be no further than 60-feet apart for the two-pour system, with contraction joint at every leveling beam location. Each adjacent pour shall have a minimum time lag of three (3) days to accommodate shrinkage.

8. Expansion joints shall not be located within 10-feet of utility crossings. Coordinate expansion joint layout with utility plans.

9. When track slab shall be installed on top of existing or modified utility vaults, install expanded polystyrene board (2-inches) between track slab and the vault.

10. Electrical continuity of the reinforcing in the track slab concrete shall be as indicated on the Contract Documents.

C. Rail Boot and Cuff Installation:

1. Install rail boot and cuff.

2. Installation of rail boot and cuff shall be as recommended by the Supplier.

D. Elastomeric Grout Installation:

1. Installation of precast concrete filler block and elastomeric grout shall be as recommended by the Supplier.

2. Before pouring or injecting elastomeric grout, application surfaces should be free of standing water and if possible, surfaces should be completely dry.

3. Pouring or injecting of elastomeric grout shall provide full bearing under the base of rail and full embedment to ensure elastic separation and electrical isolation between rail and concrete slab.

4. Exposed surface of elastomeric grout embedment at road intersection pedestrian crossings and walkways shall be a non-slip or a non-skid finish.

E. Track Drain and Trackway Drain Installation:

1. Install drains as indicated.

2. Install drains so that the drain outlets connect to drain pipes.

3.07 RAIL

A. Installation:

1. Continuous Welded Rail (CWR):

a. Install CWR in accordance with track rails requirements in the Contract Documents.

2. Restraining Rail:

a. Fabricate restraining rail shall be of new standard 115 RE rail.

b. Furnish restraining rail joints complete with 12-inch long filler block and reinforcing bars, 1/2-inch thick in accordance with AREMA Plans 325 for 115 RE rail, having two circular bolt holes, 1-7/16-inch diameter, 7-1/8-inch spacing, including bolts.

c. Separator blocks for use between inside running rails and restraining rail at locations other than restraining rail joints: 4-inches in length, with circular bolt holes 1-7/16-inch diameter, furnished complete with washers. Washers shall bear fully against the rail web and provide flat bearing surfaces for bolts. Include 1-3/8-inch diameter bolts complete with washers. Furnish and install seven (7) separator blocks for each 39-foot length of restraining rail, including tangent extensions.

d. Furnish end blocks, two (2) per curve, 12-inches long with 1-7/16-inch circular bolt holes with restraining rail for each curve. Use end blocks in accordance with AREMA Plan 504 except provide flangeway width

of 1-5/8-inch and no taper. Include 1-3/8-inch diameter bolt complete with washers.

e. Pre-curve restraining rail.

f. Install restraining rail on the low rail of curved tracks.

g. Flangeway Width: 1-5/8 inches.

h. Furnish pre-curved restraining rail end rails with tangent extensions 13-feet in length.

i. Within the curved section of pre-curved restraining rail, furnish restraining rail end drilled with one hole in accordance with the standard drilling pattern as shown on the Contract Documents.

j. Restraining Rail Bolts:

1) High strength type conforming to the requirements of ASTM F3125/F3125M and with Class 2A and 2B thread fit.

2) Equipped with a double coil steel spring washer, elastomeric rebound washer or equivalent spring device as a positive means of preventing the loosening of the element due to in-service vibrations.

k. Furnish restraining rail joint, end block, and separator block assemblies with filler blocks and appropriate reinforcing bars or washers wired together to prevent loss of parts.

3. Emergency Guard Rail (EGR):

a. EGR shall be secondhand rail 115RE, Class 4 or better, as specified by AREMA, Manual, Chapter 4 – Rail or New Industrial Grade 115 RE rail section.

b. EGR shall be installed on top of 1/4-inch to 1/2-inch thick steel base plate. Plate and emergency guard rail to be fastened using No. 106 clip or equivalent fastener, with epoxy coated U-bolt.

c. EGR on curved track with radius less than 500 feet must be pre-bent.

d. Connect EGR strings with 4-hole joints bars. Joint bars shall be in accordance with AREMA Manual Chapter 4, Section 3.2.

e. Guard distance shall be 10-inches +/- ½-inches on direct fixation track and 11-1/8 inches on ballasted track from gauge face of the running rail to guard face of EGR.

f. Ballasted Track EGR Installation:

1) Install EGR on specially designed concrete guardrail ties.

g. Direct Fixation Track EGR Installation:

1) Install anchor inserts for the installation of EGR throughout the limits of EGR.

2) Install anchor inserts for EGR to the specification standards of direct fixation for anchor inserts.

4. Running rail and restraining rail in curves having a horizontal centerline radius less than 500-feet or a vertical curve length less than 1,000-feet equivalent radius shall be precurved at a properly equipped facility. Precurved horizontal curve rail shall be by Manufacturer from beginning of horizontal curve to end of horizontal curve and precurved vertical curve shall be by the Manufacturer from beginning of vertical curve to end of vertical curve.

a. Perform field adjustments of precurved rail to match design radius as required.

1) Such field adjustments shall be incidental to the track installation and will receive no separate payment.

2) Perform field adjustments in a manner that will prevent permanent kink, twist, overstress, or otherwise damage the rail.

3.08 SPECIAL TRACKWORK

A. General:

1. Instructions, testing, and workmanship requirements and detailed material specifications relating to the purchase and manufacture of special trackwork, including manganese steel castings for solid steel track structures or wearing parts of fabricated sections, shall be in accordance with AREMA Plans 100, AREMA Specifications for Special Trackwork.

2. Special trackwork layout shall be as indicated on the approved Technical Data.

3. Lubrication:

a. At the time of installation, lubricate all sliding surfaces of special trackwork assemblies with a dry film graphite lubricant. Grease switch rod clips in accordance with the Supplier's instructions. Maintain the lubrication specified therein as necessary to ensure proper operation of all components throughout the duration of the Contract.

4. Bonded Insulated Joints:

a. Install insulated joints.

5. Installation of Special Trackwork:

a. Locate special trackwork units using stationing, coordinates, and alignment of key geometric points as indicated on the Contract Documents.

b. Assemble special trackwork using thermite welds and bolted joints.

6. Field Quality Control:

a. To determine the acceptability of the installation, the Contractor shall make an as-built survey of the special trackwork.

b. Switch points shall mate and rest under the undercut stock rail and provide a continuous contact with stock rail the length of the machined point rail face adjacent to the stock rail.

c. Switch points shall bear on all slide plates as shown by grease marks and feeler gages in the thrown operating position.

d. Operation of switch points shall be unrestricted and allow for smooth switch machine operation with current draw to suit the specified switch machine.

e. Installed Turnout Tolerances:

1) Switch point location: Within 1/4-inch of engineering station.

2) Point frog, actual point location: Within 1/4-inch of engineering station.

3) Maximum switch point stagger: 1/8-inch.

4) Lead: Within 1/2-inch.

5) Layout of control switch ties at point of switch and 1/2-inch point of frog: Normal to centerline of tangent track and within 1/8-inch.

6) Spacing between switch ties under the switch and frog: Within 1/4-inch, without accumulation.

7) Spacing between the balance of the switch ties: Within 1/2-inch, without accumulation.

8) Gauge tolerance in turnout: 1/16-inch.

9) Gauge tolerance at actual point frog: Plus 1/16-inch, minus 0-inches.

10) Nonconforming installation Issues found during system commissioning testing shall be corrected by the Contractor with no additional cost to Sound Transit.

7. Final Alignment and Inspection:

a. Submit an as-built survey report with includes spreadsheets checking individual listed installation and track geometry requirements.

b. Survey on track gauge and cross level at the following locations:

1) 1 foot before Point of Switch

2) Point of Switch

3) Every Switch Rod

4) Heel of Switch

5) Survey every 5 feet within the closure from Heel Block to Toe of Frog.

6) Toe of Frog (straight and diverging tracks) - including Toe Spread

7) At the ½ inch Point of Frog

8) 2 inches Frog width

9) Heel of Frog – including Heel Spread

c. The final surface and alignment of special trackwork shall be within the specified tolerances.

d. Measure flangeway clearances.

e. Throw the switch, check freedom of movement, clearances, measure force required.

f. The Resident Engineer will coordinate testing of the switch points with the Systems contractor installing the power switch machines to make sure that the switch throw, freedom of movement, clearance, and force required will be handled by the switch machines.

B. Ballasted Special Trackwork:

1. Placement of Switch Ties:

a. Distribute and properly place concrete switch ties on the compacted initial layer of ballast. Space ties and align within the limits of special trackwork as indicated on the approved Shop Documents. Measurement of tie spacing in special trackwork will be made at the centerline of the tangent track, unless specifically indicated otherwise on the approved Shop Documents.

2. Surfacing and Aligning:

a. Following the installation of special trackwork on the initial layer of ballast, surface the special trackwork and align.

1) Uniformly tamp ballast under both sides of each tie, directly under each running rail and edge of special trackwork component for a distance of 18-inches on both sides of the rail. The top of the ballast section shall be approximately 1-inch below the base of the rail throughout the special trackwork unit, except in the cribs containing switch and operating rods where the ballast shall be a minimum of 2-inches below the bottom of the switch rod.

b. Compact ballast crib and shoulders with a vibrator shoulder compactor.

C. Direct Fixation Special Trackwork:

1. Construction:

a. Clean special trackwork components of any concrete splatter or residue.

3.09 TRACK ELECTRICAL RESISTANCE TESTING

A. Perform track-to-earth electrical resistance tests as specified in Sound Transit Standard Specification for Track Resistance.

1. Verify ballast surface meets the rail clearance requirements on all completed segments of ballasted trackwork prior to conducting track-to-earth electrical resistance testing.

B. Perform electrical continuity test of track slab reinforcing as specified in Sound Transit Standard Specification for Track Slab Electrical Continuity before pouring of concrete.

3.10 FIELD QUALITY CONTROL

A. Maintain survey and control monuments for the duration of the Work.

1. Maintain an accurate surveyor's field book, accessible to Contractor's QC Representative at any time, indicating all checks of the trackwork alignment.

2. Permanent survey monumentation shall be protected through final acceptance.

B. Survey existing rail tie-ins centerline of track and top of rail elevations.

3.11 TRACK GEOMETRY AND ALIGNMENT SURVEY

A. Track Alignment Survey must be performed at 15'-6" intervals and must provide the following:

1. Calculated centerline of Track

2. Gauge point for each rail

3. Track Gauge

4. Elevation for each rail

5. Centerline track elevation

6. Cross level

7. Rail Cant

B. Track Geometry Survey must be performed continuously with data recorded in 6-inch intervals. The survey must provide the following:

1. Track Gauge

2. Cross Level

3. Horizontal Alignment

4. Vertical Alignment

5. Rail Cant

6. Calculate the middle ordinate of a the 31' chord

3.12 AS-BUILT SURVEY FOR RAISE CONCRETE WALKWAYS IN TUNNELS

A. Survey concrete walkway elevations and horizontal offsets at 5-foot interval longitudinally in tunnels.

3.13 AS-BUILT SURVEY FOR STATION PLATFORMS

A. Conduct survey after the station tracks are constructed.

B. Survey station platforms at 5-foot increments providing stationing, elevation and offset to the constructed tracks.

END OF SECTION

SECTION 34 11 13

TRACK RAILS

PART 1 - GENERAL

1.01 SUMMARY

A. Section includes:

1. Requirements for manufacturing, fabricating, supply, and delivery of standard and high-strength steel rails.

1.02 REFERENCES

A. This Section incorporates by reference the latest revisions of the following documents:

1. American Railway Engineering and Maintenance-of-Way Association (AREMA):

a. AREMA Manual for Railway Engineering (MRE), Chapter 4, Rail.

2. ASTM International (ASTM):

a. ASTM A578/A578M Standard Specification for Straight-Beam Ultrasonic Examination of Rolled Steel Plates for Special Application.

b. ASTM E10 Standard Test Method for Brinell Hardness of Metallic Materials.

1.03 SUBMITTALS

A. Submit:

1. Work Plan:

a. Submit all rail manufacturing, handling, shipping, loading and unloading, storing and stacking Work Plan organized by rail, track construction type, and work.

b. Detailing procedure description of rail handling, shipping, loading/unloading, identification paint marking, storing, and stacking for each type of rail.

2. Additional Work Plan for Precurved Rail:

a. Provide drawings or list of precurved rail lengths including rail sequence number, radius for each curved rail length, and location in the spiral or curved track. Include the method of marking the rails for identification and installation.

b. Provide a detailed description of precurving rail methods, equipment, and procedure.

B. Transmit:

1. Product Technical Data:

a. Transmit manufacturers' product data, including mill certs for all rails, detailing the chemical composition and mechanical properties, including surface hardness, internal hardness, and tensile properties.

b. Transmit rail manufacturing or milling processing reports for all rails' sections, branding and stamping, hydrogen elimination, ultrasonic testing, interior condition / macroetch standards, surface classification, length, listing the heat, bloom, and letter for every rail including identification of the short rail, test rail, and review during the in-plant inspection and provide to the Resident Engineer. In addition include the following data:

1) Dates of all phases of rail hardening for each charge, including head and end hardening.

2) Listing of the accepted and rejected rail in each charge.

2. Manufacturer Reports:

a. Provide a detailed description of rail steel milling and hardening methods, including equipment, and procedure.

b. Provide a detailed description of ultrasonic testing methods, including equipment, and procedure.

3. Qualification Statements:

a. Provide Ultrasonic Technician qualification certification for the individuals actually conducting the UT testing at least 30 days before the commencement of the inspection.

b. Provide the Rail Hardening Technician qualification certification for the individuals actually conducting the testing at least 30 days before the commencement of inspection.

1.04 QUALITY ASSURANCE

A. Develop and maintain a quality control program regulating methods, procedures, and processes to ensure compliance with standards of quality including inspection and testing, samples, and use of certificates of compliance.

1.05 DELIVERY, STORAGE, AND HANDLING

A. Deliver, store, and handle rails as specified in AREMA Manual, Volume 1, Chapter 4, Part 2:

1. Exercise care to avoid damage to rail, damaged rail shall be replaced at no additional cost to Sound Transit.

2. Load rail head up with the branding on rails facing in the same direction. Sort and load rails together according to their markings. Do not intermix rails of different markings during delivery, storage, and handling. If there are not enough rails of one marking for a full load or car, smaller groups consisting of tiers of different markings may be loaded.

3. Sort and band precurved rail according to curve radius. Load rails for the same curve marking together in the same or adjacent tiers.

B. Load rails with adequate dunnage between the tiers of rail to prevent damage during delivery, storage, and handling. At a minimum, place dunnage under the end of each rail and every 20-feet, on center, in between.

C. Stockpile or store rail within a controlled and secured area by the Contractor.

PART 2 - PRODUCTS

2.01 PERFORMANCE REQUIREMENTS

A. Design of Rail:

1. Rail shall be designed in accordance with the current requirements of the AREMA Manual, Volume 1, Chapter 4, Part 1, except as defined or modified herein.

2.02 MATERIALS

A. Manufacture of Rail:

1. Rail shall be manufactured in accordance with the current requirements of the AREMA Manual, Volume 1, Chapter 4, Part 2

a. Rail shall be manufactured from continuous cast blooms process.

b. Rail shall be furnished in the as-rolled (standard or high-strength carbon rail steel), or head hardened (on-line or off-line processes) conditions.

B. Rail for use as running rail, and in special trackwork shall be new 115 RE section. Rail shall be either standard or high-strength carbon rail steel. Chemical composition and mechanical properties, including surface hardness, internal hardness, and tensile properties shall be as per AREMA for carbon rail steel for Standard Rail or High Strength Rail:

1. Special trackwork, closure rails, stock rails, and precurved rails shall be fabricated using high-strength rail.

2. Design Strings of high-strength rail to minimize the number of welds and conserve high-strength rail by minimizing the generation of unusable short rails.

C. End hardening shall be provided for standard and high-strength rail with Brinell Hardness below 341 in order to provide a Brinell Hardness between 341 and 401 per ASTM E10 in accordance with AREMA Manual, Chapter 4, Part 2.

D. End hardening of drilled ends shall provide a Brinell hardness between 341 and 401 per ASTM E10 in accordance with AREMA Manual, Chapter 4, Part 2.

E. Rail shall have a maximum allowable direct current (DC) resistance: No more than 8.68×10^{-6} ohms per foot.

F. Rail shall be supplied in the maximum possible lengths to minimize welds. The minimum nominal supplied lengths are 39-feet, 80-feet.

G. Shorts: Maximum of 10 percent of the rails of each type:

1. Allowable short lengths for 80-feet rail lengths are 78-feet, 74-feet, and 70-feet.

2. Allowable short lengths for 39-feet rail lengths are 36-feet and 33-feet.

H. Allowable tolerances for rail lengths:

1. Drilled rail (rail used for restraining rail only):

a. +/- 7/16-inch for rail lengths less than 40-feet

b. +/- 7/8-inch for rail lengths greater than or equal to 40 feet.

2. Undrilled rail:

a. +/- 2-inches for all rail lengths

I. Do not end drill rails to be fabricated into continuous welded rail for joint bars or any other purpose.

2.03 FABRICATION

A. Rail:

1. Paint identification mark for each rail type by unique color. Paint must be visible from end, top, and both sides of the rail.

B. Precurved Rail: Rail used in horizontal curves with radius less than or equal to 500-feet and/or vertical curves having equivalent radius less than 1,000-feet:

1. Derived from straight rail before precurving.

2. Uniformly curved, such that the deviation of the interior mid-ordinate offset from the theoretical offset is within the tolerances for straight rail using the appropriate chord distance required by the straight rail specification.

3. Paint identity numbers so that they are visible from both the top and the side of the rails.

2.04 SOURCE QUALITY CONTROL

A. Develop and maintain a quality control program regulating methods, procedures, and processes to ensure compliance with standards of quality.

B. Submit a detailed narrative explaining the quality control program and procedures to be utilized for the work and a description of the organization to be used on the Contract.

C. Keep records of inspection work and provide to the Resident Engineer during the performance of the Contract.

D. Inspection and Testing:

1. Ultrasonic Testing: Contractor is required to conduct ultrasonic rail testing by either Method 1 or Method 2:

a. Ultrasonic Test Method 1:

1) Employ a qualified independent firm or individual to witness and certify testing.

2) Employ a qualified technician to conduct testing. Provide qualification certification of each individual conducting inspection of the rail.

3) Perform tests, analyses, and furnish the rail producer's records of inspection and shipment as specified in the AREMA Manual, Chapter 4, Part 2 and as specified herein.

4) Ultrasonically test rail for internal defects in accordance with ASTM A578/A578M, as modified herein:

a) References to "plate thickness" in ASTM A578/A578M mean rail depth from head to base for measurements from the top of the rail head, or rail web width for measurements laterally through the rail web.

b) Replace "Acceptance Standards" in ASTM A578/A578M by a defect in the occurrence of one of the following readings:

i) Complete loss of back reflection.

ii) A reflection from a defect (i.e. not attributable to a reflecting surface of the rail exterior) greater than 5 percent of the back reflection.

5) Reject a rail length if a defect occurs more than 3-feet from either end of the rail.

a) Defects within 3-feet of the rail end may be removed by cropping the rail segment containing the defect if the resulting rail length is to an allowable rail length increment and equal to or greater than the minimum allowable rail length. Include the reduced rail length as part of the quantity of allowable 10 percent shorts.

6) Conduct ultrasonic testing for the full length of each rail with a 1-inch diameter, 45-degree probe from the top of the rail head, directed along the length of the rail, positioned such that the rail base generates the back reflection.

7) Conduct ultrasonic testing within 12-inches of each rail end with the 1-inch diameter 45-degree probe and also with a 1-inch diameter, 0-degree probe from the top of the railhead, vertically, and through the rail web, laterally. The back reflection for the lateral measurement through the rail web is the web surface opposite the probe side.

b. Ultrasonic Test Method 2:

1) Manufacturer or Contractor may conduct 100 percent in-line ultrasonically tests with the Manufacturer's fully computerized ultrasonic testing unit. Conduct rail testing to the requirements in AREMA Manual, Chapter 4, Part 2. Utilizing a calibration test rail of the same section as that being tested and with the following calibration reference standard:

a) Head: 3/32-inch wide by 1/2-inch long slot.

b) Web: 1/16-inch wide by 1/2-inch long slot.

c) Base: 1/16-inch wide by 1/2-inch long slot.

2) Permanently mark indications on the rail head directly over the defect location with the percentage amplitude relative to the back reflection.

3) Conduct all rail tests and inspections at the Manufacturer's facilities before shipment. Assume full responsibility for testing indicated. Provide the Resident Engineer 30 days' notice when testing is planned so the tests may be witnessed.

2. End Hardening Testing:

a. Contractor is required to conduct End Hardening Testing:

1) Employ a qualified independent firm or individual to witness and certify testing.

2) Employ a qualified technician to conduct testing. Provide a qualification certification of each individual conducting inspection of the rail.

3) Select two (2) rail samples that were end hardened in accordance with the submitted procedure:

a) Perform testing at no additional expense to Sound Transit.

b) Acceptance of the end hardening procedure and personnel will be subject to the results of specified tests and samples. Acceptance will not be made if such results do not meet specified requirements.

4) Test the two (2) samples of end hardened rail for Brinell hardness in accordance with ASTM E10 using a standard ball (10 mm) and loading (3000 kilogram-force) in longitudinal indentation increments at least two and one half times the diameters of the indentation on the rail head for a distance of 6 inches starting from the hardened end of the rail.

5) Record the hardness number and location.

6) The Brinell hardness number (BHN) shall not be less than 341 or more than 401 when measured at a point on the centerline of rail 1/2-inch from the rail end.

a) The hardness pattern shall be uniform across the top surface of the rail head within 2 inches from the rail end.

PART 3 - EXECUTION (NOT USED)

END OF SECTION

SECTION 34 11 16

WELDED TRACK RAILS

PART 1 - GENERAL

1.01 SUMMARY

A. Section includes:

1. Requirements for fabricating continuous welded rail (CWR) strings and other welding of track rails, including testing and inspecting of CWR, and qualifying of welding and welders.

1.02 REFERENCES

A. This Section incorporates by reference the latest revisions of the following documents:

1. American Railway Engineering and Maintenance-of-Way Association (AREMA):

a. AREMA Manual for Railway Engineering (MRE), Chapter 4, Specification for Fabrication of Continuous Welded Rail.

2. ASTM International (ASTM):

a. ASTM E10 Standard Test Method for Brinell Hardness of Metallic Materials.

b. ASTM E164 Standard Practice for Contact Ultrasonic Examination of Weldments.

c. ASTM E709 Standard Guide for Magnetic Particle Testing.

3. American Welding Society (AWS):

a. AWS D1.1/D1.1M Structural Welding Code – Steel.

4. American Society for Nondestructive Testing (ASNT):

a. ASNT SNT-TC-1A Recommended Practice for Personal Qualification and Certification in Nondestructive Testing.

1.03 SUBMITTALS

A. Submit:

1. Quality Control Plan:

a. Quality control plan describing the welding procedures to be followed, including:

1) Independent Laboratory Testing, name and qualifications of laboratory and procedures to be utilized in testing.

2) Certification of ultrasonic and magnetic particle testing personnel.

3) Ultrasonic inspection procedure, equipment description, and calibration methods, including the proposed frequency of calibration.

4) Procedure for dry powder magnetic particle inspection.

5) Inspection records for each weld for ultrasonic magnetic particle test.

6) Inspection records of each weld for straightness according to the AREMA Manual.

7) Documentation of qualified welders that will be welding the track rails and CWR.

8) Documentation of the name of steel mill and Mill Certification of rail manufactured from the steel mill, includes all origin of the rail, testing, and month / year rolled for future traceability.

2. Pressure (Electric Flash-Butt) Welding Plan:

a. Prior to welding, submit pressure (electric flash-butt) welding plan describing the welding procedures, including:

1) Description of the welding procedure, including facilities, welding system, qualified welding personnel who will perform the work, and list of similar completed projects.

2) List of equipment and calibration methods, method of rail end alignment, method of rail straightening, and a schedule of lengths of rail strings to be fabricated.

3) Welding machines performance standards as provided by the manufacturer.

4) Requirement to attach a hard copy printout recorder to each welding machine to record rail movement and current impulses on the form: Attach forms “Record of Field Welds”, a copy of which is attached to the end of this Specification. Submit a record of machine performance for each weld to the Resident Engineer. If the record indicates performance that is not in conformance with the approved plan, the weld will be considered defective and shall be rejected at no cost to Sound Transit.

5) Working layout or configuration drawings for the pressure (electric flash-butt) welding machine and the proposed method and equipment for handling and laying CWR: Include reference data where the proposed equipment and laying method were previously successfully used.

6) Details of the equipment and procedure proposed for straightening welds if required. Include reference data where the proposed straightening equipment and method were previously successfully used.

7) Manufacturer/Supplier’s recommended procedure for welding standards of high-strength rail.

8) Proposed types and locations of environmental controls.

9) Proposed schedule for welding operations, including duration of welding, CWR distribution, and duration of environmental controls.

3. Thermite Welding Plan:

a. Prior to welding, submit thermite welding plan describing welding procedures, including:

1) Description of the welding procedure, including facilities, welding system, qualified welding personnel who will perform the work, and list of similar completed projects.

2) List of equipment and calibration methods, method of rail end alignment, method of rail straightening, and preliminary plan of thermite welds.

3) Detailed specification of the proposed method and exact procedure:

a) Comply with the thermite weld kit Manufacturer/ Supplier's instructions.

b) Include the name and contact information of the thermite weld kit Manufacturer.

4. Detailed procedures and working drawings for laying and anchoring CWR to the Resident Engineer.

5. Qualification welding report including each weld record.

6. Production welding reports including daily pressure (electric flash-butt) welding or/and thermite welding records.

1.04 QUALITY ASSURANCE

A. Qualifications:

1. Installers:

a. Employ welding crews to perform welds in accordance with the Contractor's accepted methods and procedures for rail welding. Rail shall be handled carefully to avoid damage.

1) Supervisor of each welding crew: trained and certified by the manufacturer supplying the weld kits and/or pressure (electric flash-butt) welder to perform rail welding.

2) Each welding crew: having performed at least one of each type of weld. Each crew must be qualified as specified herein.

2. Independent Testing Laboratory:

a. Employ an Independent Testing Laboratory to test sample pressure (electric flash-butt) or/and thermite welds. Submit the certified test results to the Resident Engineer. Approval of the pressure (electric flash-butt) welder, weld kit, weld specification, and welding crews will be dependent upon the sample welds satisfying the test requirements.

b. Testing Technician:

1) Certified in accordance with ASNT procedure SNTTC1A, Level II or III.

2) Tested in accordance with ASNT procedure SNTTC1A, Level II or III to ensure ability to calibrate the equipment and detect defects in rail:

a) Conduct test with the standard IIW calibration blocks, distance and sensitivity calibration (DSC) Blocks and calibration rail as specified herein serving as the test specimens.

b) Technician shall be able to locate all the holes in the calibration rail by ultrasonic testing.

c) Test will be observed by an independent technician provided by Sound Transit, certified in accordance with ASNT procedure SNTTC1A, Level II or III and experienced in ultrasonic examination of rail welds.

d) Failure to pass this test will result in the disqualification of the technician.

B. Qualification of Pressure (Electric Flash-Butt) Welds:

1. Qualified pressure (electric flash-butt) welds must be dependent upon the acceptable results from the specified tests performed on the qualification sample welds using the same proposed pressure (electric flash-butt) welding plan, machine, procedures, and Supplier instructions.

2. Fabrication of Qualification Pressure (electric flash-butt) Welds:

a. Perform three (3) qualification welds of one (1) high-strength to high-strength rail, one (1) standard to standard rail, and one (1) high-strength to standard rail in accordance with: AREMA Chapter 4, Part 3.10 and 3.11, AREMA Chapter 4, Part 2.1.13.1, and using the proposed pressure (electric flash-butt) welding plan, machine, procedures and the Supplier's instructions.

b. All three (3) qualification welds are required to pass.

c. The Resident Engineer will select rails for the three (3) qualification pressure (electric flash-butt) welds.

d. Testing of Qualification Pressure (electric flash-butt) Welds:

1) Magnetic Particle Test: ASTM E709:

a) This test is required for each of twelve (12) Qualification Pressure (electric flash-butt) Welds and not required for rail production pressure (electric flash-butt) welds.

b) Rail temperature: below 800 degrees Fahrenheit.

c) Acceptance criteria: Particles form regular longitudinal pattern indicating homogeneity of the weld and freedom from defects, surface irregularities and internal discontinuities.

2) Slow Bend Test:

a) Perform one (1) slow bend test for each of three category welds that have passed the magnetic particle test.

b) For test procedures comply with AREMA Manual Chapter 4, Part 3.

c) Acceptance criteria:

i) Minimum 3/4-inch deflection before visible failure.

ii) Minimum 125,000 pounds per square inch modulus of rupture.

3) Macroetch Test:

a) Perform one (1) macroetch test for each of three category welds that have passed the magnetic particle and slow bend tests.

b) Test procedures shall comply with AREMA Manual Chapter 4, Section 3.10.

c) Acceptance Criteria:

i) As specified in AREMA Manual Chapter 4, Section 3.10.

4) Hardness Test:

a) Perform three (1) hardness test for each of three category welds that have passed the magnetic particle, slow bend, and macroetch tests.

b) Test procedures shall comply with AREMA Manual Chapter 4, Section 3.10.

c) Acceptance criteria:

i) As specified in AREMA Manual Chapter 4, Section 3.10.

5) Failure of any qualification rail welds to satisfy the specifications, then either the welding process or the welding crew, or both will not be permitted to have welds be incorporated into the project work. Replacing the supervisor of the welding crew during the work, requalification of the welding crew under the new supervisor is required.

C. Qualification of Thermite Welds:

1. Qualified thermite welds must be dependent upon the acceptable results from the herein specified tests performed on the qualification sample welds using the same proposed pressure (electric flash-butt) welding plan, kits, machine, procedures, and Supplier instructions.

2. Fabrication of Qualification Thermite Welds:

a. Perform three (3) qualification welds of one (1) high-strength to high-strength rail, one (1) standard to standard rail, and one (1) high-strength

to standard rail using the proposed thermite welding plan, machine, procedures, and the Supplier's instructions.

b. All qualification welds are required to pass.

c. The Resident Engineer will select rails for the three (3) thermite qualification welds.

d. Testing of Thermite Qualification Welds:

1) Visual Test on all three (3) qualification welds: AREMA Manual, Chapter 4, Part 3, Section 3.13.

a) Reject welds with surface cracks.

2) Magnetic Particle Test on all three (3) qualification welds: ASTM E709. This test is only required for qualification welds and not for production welds:

a) Rail temperature: below 800 degrees Fahrenheit.

b) Acceptance Criteria: Particles form regular longitudinal pattern indicating homogeneity of the weld and freedom from defects, surface irregularities and internal discontinuities.

3) Ultrasonic Testing on all three (3) qualification welds.

4) Slow Bend Test:

a) Perform slow bend test on all three (3) qualification welds that have passed the magnetic and ultrasonic tests.

b) For test procedures comply with AREMA Manual Chapter 4, Part 3, Section 3.10.

c) Acceptance criteria:

i) Minimum 3/4-inch deflection before visible failure.

ii) Minimum 125,000 pounds per square inch modulus of rupture.

5) Hardness Test:

a) Perform hardness test on all three (3) qualification welds that that have passed the magnetic particle, ultrasonic, and slow bent tests.

b) Test procedures shall comply with AREMA Manual Chapter 4, Section 3.13.

c) Acceptance criteria:

i) As specified in AREMA Manual Chapter 4, Section 3.13.

3. Ultrasonic Testing: ASTM E164, with the procedure and equipment:

a. Acceptance criteria: Free from defect or flaw giving a reflected display of greater than 20 percent of distance-amplitude correction curve at calibration level, or as listed in Table 1.

TABLE 1 MINIMUM ACCEPTANCE LEVELS (DECIBELS)

Weld Thickness (inches) and Transducer Angle								
Reflector Severity	5/16 inch to 3/4 inch	3/4 inch to 1-1/2 inch	1-1/2 inch to 2-1/2 inches		2-1/2 inches to 4 inches		4 inches to 6 inches	
	70°	70°	70°	45°	70°	45°	70°	45°
Large Reflectors	+8	+3	1	+4	-4	+1	-7	-2
Small Reflectors	+9	+4	+1	+6	-2	+3	-5	0
Minor Reflectors	+10	+5	+3	+8	0	+5	-3	+2

b. Incorporate the following in the test procedure:

1) Scanning level: positive 20 decibel minimum.

2) Scan rail in a zigzag pattern-twisting probe, on one side of the weld only at a rate not exceeding 6-inches per second, so that the full weld is scanned. Overlap each pass a minimum 10 percent and scan rail longitudinally.

3) Calibrate equipment at the start and end of each day's work, and at least every four (4) hours during examination, and hourly checks with DSC blocks. If any point on the distance-amplitude curve has been changed by more than 20 percent, void and re-examine all results since last calibration check. If the curve has moved on the sweep line by more than 5 percent, re-examine all noncomplying welds since last calibration check.

4) When a reflection of greater amplitude than the acceptance criteria is found, scan around the full perimeter of the weld from both sides, to ensure full weld coverage and determination of size, type, and location of discontinuity.

5) Make permanent trace recording of discontinuity indications.

6) Paint the rail web at non-conforming welds on both sides across the weld.

c. Use the following equipment for ultrasonic testing and document on test report form:

1) Ultrasonic, pulsed echo, instrument:

a) Type normally used for inspection of rails with calibrated decibel gain control of minimum 2 decibel increments.

b) Operate in the range 15 MHz, with screen and scale.

c) Capable of detecting a 3/64inch discontinuity 6.1/2-inches below top of rail.

2) Calibrated paper tape recording attachments: to record accurately the screen indications when a noncomplying weld is located.

3) 2.25 MHz angle beam transducers: 1/2-inch by 1-inch at 70 degrees and 45 degrees.

4) High viscosity couplets of good wetting characteristics.

5) Standard IIW calibration blocks of rail steel: for primary reference response and to construct distance-amplitude correction curve.

6) DSC Blocks of rail steel for calibration checks.

7) Calibration Rail: 115RE rail, 18-inches long with a 3/64inch diameter round bottom hole 61/2-inches below top of rail and in which other 1/8inch diameter flat bottom hole patterns have been drilled as shown in Figure 2.

8) Ultrasonic Test Report Form:

a) Record 20 inspected welds per sheet.

b) Include the location of the weld in track, the results of the ultrasonic inspection including size of defects found in the head, web or base of rail, shape identity and location of all reflections, trace record, the results of the visual inspection, name of inspector, and other information noted on Figure 1 Record of Field Welds.

PART 2 - PRODUCTS

2.01 MATERIALS

A. Rail for Continuous Welded Rail:

1. Furnished in accordance with track rails requirements.

B. Thermite Welds:

1. Suppliers: Form thermite type rail welds utilize one (1) of the following brands of rail welding kits or an approved equal:

a. Thermite Self PreHeat – as manufactured by Orgothermite Inc., Lakehurst, New Jersey (http://www.orgothermit.com/index.html).

b. Railtech Boutet – (http://www.railtechboutet.com/products).

2. Rail welding kits for welding high strength rail: conform to the Supplier's instructions and recommendation for such work.

3. Prior to selecting the thermite weld kit brand, obtain from the weld kit Supplier's confirmation in writing that the weld finish after grinding is obtainable and guaranteed.

2.02 FABRICATION

A. Welds:

1. Rail shall be welded by the following two (2) methods:

a. Pressure (electric flash-butt) Weld: Weld rail outside the limits of special trackwork into continuous strings using the pressure (electric flash-butt) welding process.

b. Thermite Weld: Only at locations where it is impractical to perform Pressure (electric flash-butt) Welds and for joining continuous welded rail strings.

2. Assess the number of rails to be welded under this Contract and the number of welds that can be made by any one welding process. Use this information to optimize the procedures for laying and welding CWR strings.

B. Continuous Welded Rail (CWR) strings:

1. Lengths:

a. Longest practical to fabricate and handle.

b. As required by the track alignment, bolted joint location, and worksite access.

c. The designed rail string lengths and connecting points need to suit the needed welding space in the field and future track maintenance needs.

2. Develop a schedule/plan of the placement of rail string by location in track plan and in track charts:

a. Consist of a schedule of lengths and designations of welded rail strings to be fabricated and proposed location in track and indicated in track plan and in track charts.

b. Indicate which strings or which portions of strings will be high-strength rail.

c. Indicate the locations of the proposed field cuts, if any.

d. Minimize thermite welds between standard rails and high-strength rails.

e. Use the field pressure (electric flash-butt) welding equipment to connect the rail strings over thermite welding where practicable.

f. Where thermite welding is used for connecting rail strings, it must satisfy the following:

1) Standard strength thermite weld kits are only for standard to standard rail welding.

2) Head hardening thermite weld kits are for high-strength to high-strength or high-strength to standard rail welding.

g. Designation of the location of rail strings:

1) Clearly identify location in track and indicated in track plan and track charts by line, survey stationing, track, and rail.

2) Marked on the web of both end rails of each string with paint suitable for application to steel in exterior service.

3) Unique identification for each rail string coordinated with the welding schedule indicating the location of each rail string by rail and track.

PART 3 - EXECUTION

3.01 PREPARATION OF RAIL

A. Rail Ends:

1. Cut square and clean by means of rail saws or abrasive cutting wheels in accordance with AREMA Manual, Chapter 4, Part 2, Section 2.1 Specifications for Steel Rails. Do not torch cut rails. Recut rail ends more than 1/32-inch out of square.

2. Inspect and verify no steel defects, dents, or porosity before welding.

3. Clean all rail surfaces on the rails to be welded a minimum of 6 inches back from the rail ends to remove all grease, oil, dirt, loose scale, and moisture.

4. Clean the rail ends further to remove all scale and rust if any for 2 inches on each side of the weld by using a power-actuated grinder with an abrasive wheel.

5. Remove all burrs and lipped metal that would interfere with the weld and proper fit of the mold, etc.

6. End finished in a method that does not metallurgically or mechanically damage.

B. Straightness:

1. Conform to the AREMA Manual, Chapter 4, Part 2, Section 2.1 Specifications for Steel Rails, for straightness, to ensure rail has not been damaged prior to welding.

2. Straighten rails cold in a hydraulic press or roller machine to remove twists, waves, and kinks until they meet the surface and line requirements. Submit method to be used for permanent straightening to the Resident Engineer for approval.

3. If rail is unable to be straightened permanently, either reject rails or cut back a sufficient distance to achieve the required alignment. Remove burrs. Mark and stockpile rejected rails to prevent them from reuse.

C. Orient rail strings on aerial guideway or tunnel so that the rail brands face the center of the maintenance walkway.

D. Weld shop pre-curved rail in place in the track.

3.02 INSTALLATION

A. General:

1. Fabricate ends of CWR strings with a single hole to facilitate handling. Cut off holes with rail saw or abrasive cutting disc at least 3-inches from the hole prior to welding to another rail. Do not torch cut.

2. Handling and transporting CWR strings shall conform to the requirements of AREMA Manual, Chapter 5, Part 5. Bumping and striking the rail during handling or laying shall not be permitted. Use rail rollers to facilitate transporting and avoid damage to rail, track appurtenances, embedded reinforcing, concrete plinth, and other facilities. For direct fixation, embedded and tunnel track, rail rollers with spacing no more than 40 feet are required to transport rail strings. Running rail shall be field drilled for restraining rail installation.

3. Do not place welds, pressure (electric flash-butt) or thermite, within 9-feet of track rail joints.

4. Stagger thermite welds in opposite rails by one tie or fastener spacing, centered in the middle of the crib. Unless indicated otherwise, locate thermite welds so that they do not occur at the following locations:

a. Within 13-feet of a thermite weld in the same rail.

b. On ballasted or direct fixation track within 200-feet of aerial guideway abutment.

c. Within 20-feet of a change of track construction type other than that described above.

d. Within panelized roadway crossing and 10 feet beyond.

e. Thermite welds shall be installed, a minimum of 6 inches from the edge of the rail seat of a concrete crosstie, direct fixation rail fastener or switch tie plate.

5. When abutting CWR strings where cutting is required to fit and where the option of cutting standard rail or high-strength rail CWR exists, cut the standard rail CWR string.

B. Laying Continuous Welded Rail:

1. Laying, clamping, and fastening CWR shall be according to the following procedure:

a. Place the CWR on direct fixation fastener rail seat and concrete ties in accordance with the approved working drawings.

b. Rail Temperature Records:

1) An as-built record of the rail temperature and the information specified herein as recorded by the Contractor at the time of rail anchoring shall be transmitted to the Resident Engineer.

a) Location by track name, station, and rail.

b) Date and time.

c) Rail weight and section, mill brand, year and month rolled, and heat number of the end rails in each CWR string.

d) Length of CWR string in feet.

e) Air temperature, rail temperature, and approximate weather conditions.

f) Rail end gap to nearest 1/16-inch.

g) Adjustments applied to obtain zero thermal stress.

c. Determine rail temperature by means of AREMA standard rail thermometers as specified in Chapter 5, Part 6, Specifications and Plans for Track Tools, of the AREMA Manual or a calibrated infrared thermometer:

1) Standard Rail Thermometers:

a) Place two (2) rail thermometers on the shaded side of the rail base next to the web and leave in place until no changes in the readings are detected, but no less than 10 minutes.

b) Take the average of the two temperature readings at the time of adjusting the gap between rail ends.

2) Infrared Rail Thermometers:

a) Calibrate in accordance with manufacturer's recommendations.

b) Measure rail temperature at the point where the rail web meets the base on the shaded side of the rail.

d. If the rail temperature deviates from the specified zero thermal stress range, fastening or anchoring of rail shall cease until the rail temperature returns to within the specified range and the rail has been vibrated to relax localized stress build-up.

2. Gap: During rail laying, determine the gap between CWR strings and between CWR and bolted rail by using the equation:

$$G = (t-T)LK+Q$$

Where:

G = Rail gap in inches.

t = zero thermal stress temperature in degrees Fahrenheit.

T = Average actual rail temperature at time of laying in degrees Fahrenheit.

L = One-half the sum of lengths of CWR string being laid and the preceding CWR string.

K = Coefficient of thermal expansion for rail steel (0.000078-inch per foot per degree F).

Q = Rail gap as required by manufacturers of field weld kit in inches. For bonded insulated joints, Q equals the end post thickness.

3. Install and clamp the rail to produce zero thermal stress in the rail within the zero thermal stress temperature (neutral temperature) ranging between 90 degrees Fahrenheit to 105 degrees Fahrenheit. Tunnel rails more than 300-feet from portals shall be between 55 degrees Fahrenheit to 70 degrees Fahrenheit and within 300-feet from portals shall be treated as exposed rails.

a. Zero thermal stress in CWR can be achieved by heating, cooling, vibrating, or pulling the rails, or a combination thereof.

b. When zero thermal stress is obtained, begin anchoring immediately:

1) The stress within the rail shall remain within the specified zero thermal stress range during installation of joints.

c. Methods for artificially obtaining zero thermal stress shall be subject to the Resident Engineer's review prior to use.

d. Once zero thermal stress has been obtained, maintain the correct rail gap until the rail is fully anchored.

e. Vibrators used for relieving internal rail stresses shall be of a type not to damage the CWR.

f. CWR shall not be struck with objects that might damage the rail.

4. The installation of rail anchoring as described on AREMA Manual, Chapter 5, Part 4 Track Construction, is not required, unless anchoring is not provided by the longitudinal restraint characteristics of the rail fastening spring clip:

   a. Install the fasteners when the temperature of each rail in a track is within the allowable range and shall be within 5 degrees Fahrenheit of the opposite rail anchoring temperature.

   b. Prior to placing on-track equipment on newly laid rail, secure the rail in a manner that will prevent damage to the rail and track material.

   c. Move equipment over partially secured track in such a manner as to prevent damage to structures and trackwork materials.

   d. Temporarily fasten newly laid rail at the specified gauge at every 10-feet on tangents and on curves having a radius greater than 500-feet:

      1) On curves having a radius of 500-feet or less the temporary fastening shall be at least every 5-foot interval.

   e. Remove rail fastening spring clips at the time of CWR temperature adjustment.

5. When a joint is made between clamped CWR strings, the rail gap shall be as specified. If the gap is not within the recommended tolerances for the joint, unclamp the CWR strings for 300-feet each side of the rail gap, and readjust each CWR string for 300-feet within the specified zero thermal stress temperature range. Reclamp the CWR before the joint is made. If the recommended rail gap cannot be obtained in this manner, unclamp one of the strings entirely, move, length-adjust, and reclamp so that the specified rail gap is obtained. If the Contractor elects to use a mechanical means of adjusting the rail for clamping, the method and equipment proposed shall be subject to review by the Resident Engineer.

6. After the lengths of CWR strings are adjusted for the zero thermal stress temperature vibrate them to relieve internal rail stresses, and fully anchor by complete spring clip application. Perform rail vibration with a mechanical device producing a frequency of 900 to 1,000 Hertz and a force of 160 pounds per cycle acting on the head of the rail. The method the Contractor uses to adjust the rail shall be subject to review by the Resident Engineer. The use of hydraulic machines or other "rail stretchers" in such a manner that concentrate stresses in the end section of the rails will not be allowed.

7. Final rail fastening with zero thermal rail stress shall not proceed until the track installation meets the track construction requirements.

C. Pressure (Electric Flash Butt) Welding:

1. Conform to the AREMA Manual, Chapter 4, Part 3, Section 3.11 Specification for Fabrication of Continuous Welded Rail except as modified herein.

2. Performed using a portable electric flash-butt welding plant or a mobile electric flash-butt welding machine designed for rail welding:

   a. If the pressure (electric flash-butt) weld machine suffers a period of malfunctioning or major repair, or when the welding crew is replaced, perform two (2) additional test welds. Re-qualify the welding machine or the new crew only after two (2) acceptable welds are produced.

3. Saw or cut mismatched or jagged rail ends with an abrasive rail cutter. Do not mate mismatched or jagged rail ends by flashing. Torch cut rail is prohibited.

4. Preparation of Rail Ends for Pressure (Electric Flash-Butt) Welding:

   a. All rails used for electric flash butt welds shall have the scale removed down to bright metal in those areas of the rails where the welding current-carrying electrodes contact the rail:

      1) There shall be no grinding on the top of rail head exceeding 0.005 inch. There shall be no grinding on the head radius exceeding 0.005 inch. There shall be no grinding on the side of the rail head exceeding 0.010 inch. These shall be measured using a 36-inch straightedge placed on the top of the rail head, railhead radius or the side of the rail head, longitudinal with the length of rail.

   b. If electrode or clamp contact is in the web of the rail, the rail branding must be ground flush to the rail contour in the area of electrode and clamp contact.

5. Remove rail scale down to bright metal in areas where the welding current-carrying electrodes contact the rail. Grind down raised rail brands in electrode areas. Reject the weld and adjacent rail for a distance clearing the electrodes if, in the areas of electrode contact, less than 95 percent of the mill scale is removed. Examine electrode contact areas for evidence of electrode burn. Reject the weld where metal is displaced or where the oxidized areas exhibit checks or small cracks and cut the rail back clear of the electrode burn.

6. Forge welds to the point of refusal to further plastic deformation and to a minimum upset of 1/2-inch, with 5/8-inch as standard.

7. If flashing on pressure (electric flash-butt) welds is interrupted, because of malfunction or external reason, with less than 1/2-inch of flashing distance remaining before upsetting, reclamp rails in the machine and initiate flashing again.

8. Whenever possible, grind rail immediately following welding while at an elevated temperature. When grinding must be done at ambient temperature, take care to avoid grinding burns and metallurgical damage.

9. Align head of rail in the welding machine:

   a. Vertical alignment: Provide for a flat running surface. Align rails such that any difference of rail heights occurs in the base.

   b. Horizontal alignment: Divide the difference in the width of rail heads equally on both sides of the head. If the difference, when divided, exceeds 0.040-inch, place 0.020-inch of the difference on the gauge side and the remaining differences on the field side (Brands on field side).

   c. Horizontal offset: Do not exceed 0.040-inch at the head and/or 0.125-inch at the base.

10. Surface and Gauge Misalignment Tolerances: AREMA Manual, Chapter 4, Part 3, Figure 4-3-23 Tolerances for Inspection of Welded Rail New and Mainline Relay Rail.

11. If, at any time, seven (7) or more of a series of 12 consecutive welds made on one (1) machine exceed 75 percent of the stated surface misalignment tolerances shut down that machine and adjust before continuing work.

12. Cut out any re-welds beyond the heat-affected zone of the previous weld.

13. Weld Finishing:

    a. A finishing deviation of not more than plus 0.005, and minus 0.000 inch of the parent section of the rail head surface is permissible.

    b. The sides of the rail head to be finished to plus 0.010, and minus 0.000 inch of the parent rail section. If the bottom of the rail base is to be finished, the rail base to be ground to within 0.010 inch of the lowest rail.

    c. The web zone (underside of head, web, top of base, both fillets each side), shall be finished to within 1/8 inch of parent contour or closer but shall not be deeper than the parent section. Finishing shall eliminate all surface cracks.

    d. All notches created by offset conditions or twisted rails shall be eliminated by grinding to blend the variations.

    e. All fins on the weld due to grinding and/or shear drag shall be removed prior to final inspection.

14. One handling hole can be made in each end of a CWR string. Paint ends of rails containing such holes orange and cut off during track construction. Torch cut is prohibited.

D. Thermite Welding:

1. Join CWR rail sections in track in the field by thermite welding. Electric flash butt welds by the portable plant can be substituted for thermite weld connecting CWR strings only.

2. Thermite weld placement shall be limited to special trackwork locations, and the locations specified herein.

3. Do not weld rail ends containing bolt holes or handling holes. Cut off rail ends containing such holes at least 4-inches from bolt prior to welding during track construction. Torch cut rail is prohibited.

4. Preparation of Rail Ends:

    a. Either saw-cut or grind at right angles to the rail to provide a smooth and clean surface.

    b. Grind clean the surface of the rails for a length of approximately 6-inches from the end of the rails to remove all grease, dirt, loose oxide, oxidized metal, scale, and moisture.

    c. Remove branding, burrs and lipped metal which would interfere with the fit of the mold.

5. Head Alignment:

    a. Comply with the AREMA Manual except as modified herein.

    b. Weld gap at the time of thermite welding: recommended by the manufacturer of the weld kit:

        1) If the rail gap is larger than the manufacturer's recommended gap after the rails have been adjusted for zero thermal stress, then

remove sufficient rail from one or both rails to permit insertion of a rail not less than 13-feet long which shall provide the recommended gaps at each end for field welding.

2) If the rail gap is smaller than the manufacturer's recommended gap after the rails have been adjusted for zero thermal stress obtain the recommended gap by sawing a piece from one rail.

6. Preheat rail ends prior to thermite welding. Preheat to a sufficient temperature and for sufficient length of time as indicated in the approved welding procedure to ensure full fusion of the weld metal to the rail ends without cracking of the rail or weld.

7. Post-heat thermite welding by leaving the mold in place after tapping for sufficient time to permit complete solidification of the molten metal and proper cooling to prevent cracking and provide a complete weld with proper specified hardness and ductility.

8. Weld Finishing:

a. After removing the mold, use rail shears to trim upset weld metal.

b. Complete any heavy grinding of the weld while the weld is still hot from welding.

c. Grind weld to the following tolerances:

1) Top of the rail head: Within plus 0.005-inch minus 0.000-inch of the parent section.

2) Field and gauge side of the rail head: Within plus 0.010-inch minus 0.000-inch of the parent section.

3) The remainder of the rail weld: The base riser break off area shall be ground flush with the weld collar. Other than the smoothing of the base riser break off area, the as cast geometry of the thermite weld shall be left intact.

d. Eliminate notches created by minor offset conditions, twisted or misshaped rails by minimum grinding to blend the variations.

e. Remove protrusions and gouges in the welded area. Blend into the rail contour by grinding in a manner that will eliminate fatigue crack origins.

f. Remove defects visible to the unaided eye by grinding.

g. Do not use grinding pressure that will overheat the rail surface.

9. After finishing thermite welds, only visual inspection and field ultrasonic testing must be conducted for quality control.

E. Repair/Restoration

1. Pressure (electric flash-butt) welds rejected during final track inspection or testing or thermite welds rejected during inspection and testing shall be removed and re-welded, or replaced with at least a 13 foot rail welded in its place by two (2) thermite welds.

3.03 FIELD QUALITY CONTROL

A. Production, Inspection, and Testing of Pressure (electric flash-butt) Welds:

1. Use a chart recorder to monitor significant welding parameters. Identify each weld in each string and the rail schedule designation for each string with a notation to indicate the beginning and ending of each CWR string. Calibrate each recorder used daily. Recordings shall become the property of Sound Transit at the time the welded rail is released for installation.

2. Inspect pressure (electric flash-butt) welds by the dry powder magnetic particle method in accordance with ASTM E709.

3. Inspect pressure (electric flash-butt) welds in accordance with the AREMA Manual and as specified herein.

4. Replace defective pressure (electric flash-butt) welds immediately during production. Repair other defective weld findings as specified in herein.

5. Measure the hardness of the weld on the head of the rail in the center of the weld and the heat affected zone and verify it is equal to the Brinell hardness of the parent metal with a tolerance of plus or minus 30 Brinell Hardness Numbers. Reference the Brinell hardness of the parent metal from the rail test records provided by the mill/rail manufacturer. The Resident Engineer will randomly select one weld out of each 10 for Brinell Hardness testing by the Contractor's approved Testing Technician.

6. Employ an independent testing laboratory to perform weld testing at the Contractor's expense. The testing service and their testing program and procedures are subject to approval as specified herein.

7. Employ the independent testing laboratory to certify whether or not each weld meets the quality acceptance criteria detailed and record their findings as to acceptability or rejection of the welds. Submit independent testing laboratory reports directly to the Resident Engineer.

8. Identify Pressure (Electric Flash-Butt) Welds and Rail Strings: At the completion of welding each string of CWR, submit a record to the Resident Engineer documenting production of the string. Include all the heat numbers of the rails in the string, the number of welds in the string, the heat numbers of rail on each side of welds that have been cut out and re-welded, a record of machine performance for each weld, and reports for magnaflux testing. Bind reports in pad or notebook form for ease of handling and retention as permanent record.

B. Defective Thermite Welds:

1. Determined as follows:

a. Quality or finishing alignment not in accordance with as specified herein.

b. Show a response at any level that is identified as a crack or lack of fusion.

c. Show a response that exceeds the primary reference level.

d. Show a response that is less than 50 percent of the primary reference acceptance level.

e. Welds that show a response greater than 50 percent but that do not exceed the primary reference level are acceptable, provided that the following apply:

1) The defects are evaluated as slag or porosity.

2) The largest defect does not exceed 0.180-inch in its largest dimension.

3) The total area of the defects does not exceed 0.009-square inch.

4) The sum of the greatest dimension of defects in a line does not exceed 3/8-inch.

END OF SECTION

FIGURES (On Proceeding Pages)

1. **Figure 1** - Record of Field Welds

2. **Figure 2** - Calibration Rail

FIGURE 1

RECORD OF FIELD WELDS

DATE:_____

TIME:_____

TRACK DESIGNATION:_____

LOCATION: STA._____**TO STA.**_____**(LT.RT)**

RAIL SECTION: **115RE** **OTHER:**_____

MILL BRAND:_____

YEAR ROLLED:_____**(AHEAD)**_____**(BACK)**

HEAT NUMBER:_____**(AHEAD)**_____**(BACK)**

TYPE OF RAIL: HEATTREATED CONTROLCOOLED (CIRCLE)

HIGH STRENGTH RAIL: (YES) (NO)

RAIL CUT REQUIRED: (YES) (NO)

RAIL CLAMP OR STRETCHER USED: (YES) (NO)

MANUFACTURER OF FIELD WELD KIT:

FIELD WELD KIT SERIAL NO. AND SHELF-LIFE OR EXPIRATION DATE:

AIR TEMPERATURE:

RAIL TEMPERATURE:_____

WEATHER CONDITION:_____

RAIL GAP (NEAREST 1/16 INCH):_____

TRACK ALIGNMENT AND CONSTRUCTION:_____

(Curve, Tangent, Grade, Etc.)

NAME OF ENGINEER OR REPRESENTATIVE PRESENT:_____

NAME OF CONTRACTOR'S FOREMAN PRESENT:_____

NAME OF MANUFACTURER'S REPRESENTATIVE PRESENT:_____

(Initialed by those present)

DATA RECORDED BY (NAME): (SIGNATURE):

FIGURE 2

CALIBRATION RAIL

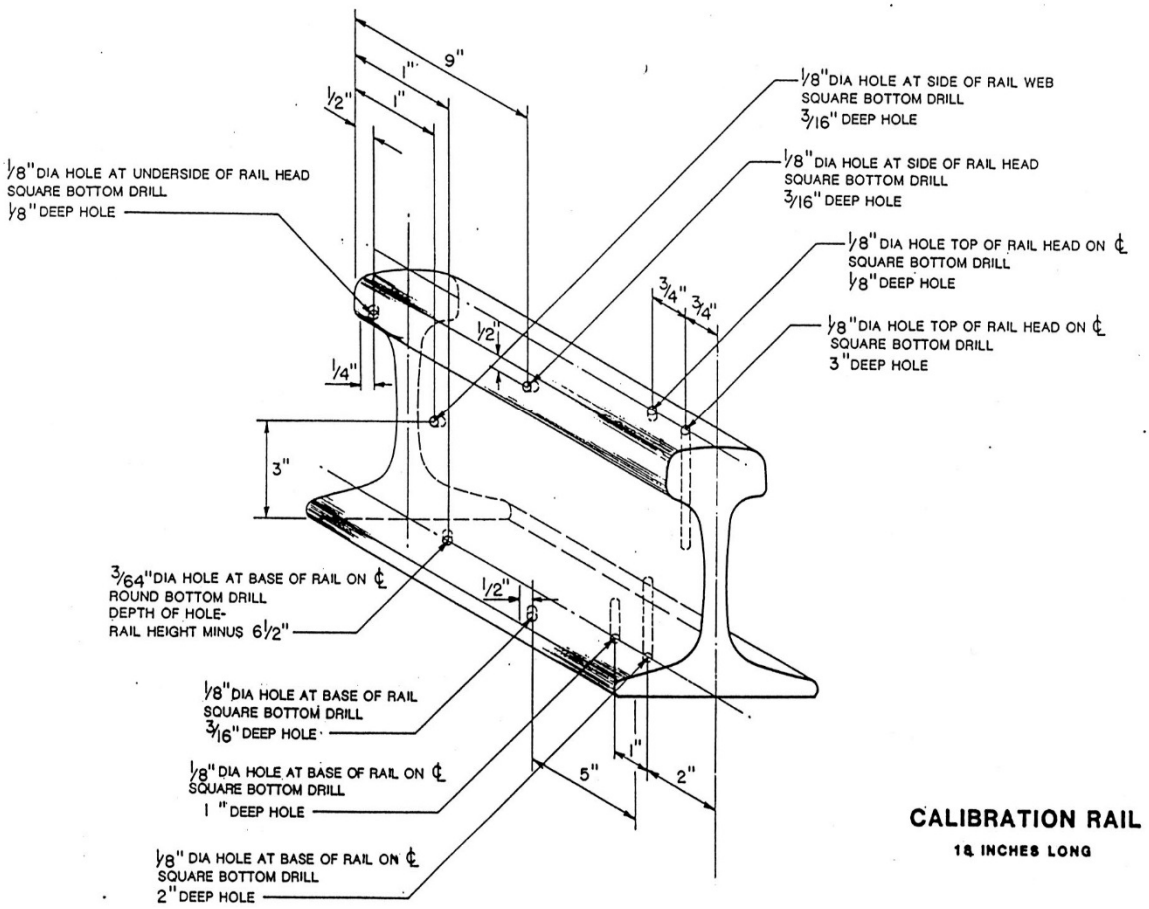

END OF FIGURES

SECTION 34 11 19

TRACK RAIL JOINTS

PART 1 - GENERAL

1.01 SUMMARY

A. Section includes:

1. Requirements for furnishing, fabricating, delivering and installing joint bars including: bonded insulated joints, factory prefabricated bonded insulated joint plug rails. Bonded insulated joints lengths and sections within the turnouts and diamond crossing will be sized by the special trackwork Supplier, but shall meet the requirements as specified herein.

B. All insulated joint locations outside the limits of special trackwork shall be factory prefabricated bonded insulated joint plug rails.

1.02 REFERENCES

A. This Section incorporates by reference the latest revisions of the following documents:

1. American Railway Engineering and Maintenance-of-Way Association (AREMA):

a. AREMA Manual for Railway Engineering (AREMA Manual).

b. AREMA Portfolio of Track Work Plans (AREMA Plans).

c. AREMA Communications and Signals Manual (AREMA Signal Manual).

2. ASTM International (ASTM):

a. ASTM F436/F436M Standard Specification for Hardened Steel Washers Inch and Metric Dimensions.

b. ASTM F3125/F3125M Standard Specification for High Strength Structural Bolts, Steel and Alloy Steel, Heat Treated, 120 ksi (830 MPa) and 150 ksi (1040 MPa) Minimum Tensile Strength, Inch and Metric Dimensions.

3. The Society for Protective Coatings (SSPC):

a. SSPC SP 10 Near-White Blast Cleaning.

1.03 SUBMITTALS

A. Submit:

1. Technical Data, including shop drawings, manufacturer details, and installation instruction for all rail joint types within Work.

2. Electrical Resistance Tests and include track (NB, SB, EB or WB), joint location (station), position (left or right) and compliant results.

B. Transmit:

1. Installation Procedures Plan per track rail joint type, including:

a. Installation crew Qualifications.

b. Installation procedures.

c. Recommended bolt tensioning.

d. Specified CWR rail gap and proposed procedure for maintaining the gap during installation of bonded joints.

e. Bonded Insulated Joints Testing: Provide test results documentation as required for the Work.

2. Certifications:

a. Supplier.

1.04 QUALITY ASSURANCE

A. Certification:

1. Tests certified by an Independent Testing Laboratory as approved by Resident Engineer.

2. Supplier's certification: Detailed description of the Supplier's proposed quality control program for manufacturing the bonding adhesive used in the bonded insulated joints, including how it is regulated, maintained, and monitored.

B. Qualifications:

1. Field Fabricated Bonded Insulated Joint Installation Crew:

a. Installation Crew and Foreman require pre-qualification before installing bonded insulated joints.

1) Pre-qualified by testing two (2) bonded insulated joints fabricated by the crew:

a) Joints shall be fabricated in track and tested.

b) Failure of a test sample disqualifies the Foreman and, at the discretion of the Resident Engineer, the entire crew or any crew member.

c) If failure of a test sample occurs, assign a new Foreman and crew personnel as necessary, then repeat the qualification procedure.

2) Pre-qualification test reports for bonded insulated joints performed by the crew and/or foreman from previous projects may be submitted meeting the requirements. Provided these reports are within five (5) years and the past test results meet the requirements herein.

C. Tolerances:

1. Joint Bars:

a. Height: Within a tolerance of plus or minus 1/64-inch of the dimensions indicated on the provided Technical Data.

b. Length: Within plus or minus 1/8-inch of the dimension shown on the provided Technical Data.

c. Straightness: Within plus or minus 1/32-inch of the adjacent rail.

PART 2 - PRODUCTS

2.01 MANUFACTURED PRODUCTS

A. Bonded Insulated Joints:

1. Manufacturers: Use bonded insulated joints of one of the following types or an approved equal:

   a. The "Allegheny" joint as supplied by L.B. Foster.

2. Furnish bonded insulated joint kits complete with bars, end posts, bushings, washers, pin bolts, collars, and adhesive as recommended by the Supplier.

3. Joint bars:

   a. Shall be 36 inches long with six (6) holes:

      1) Bolt hole shape, size and locations shall conform to Contract Drawings.

   b. Provide full face contact.

   c. Conform to the configuration of 115 RE rail, and the Bonded Joint Clearance Envelope 115 RE (see Figure 1).

   d. Fabricated from quenched carbon-steel as specified in the AREMA Manual, Chapter 4, Part 3.

   e. Tolerances as specified.

4. Insulation material:

   a. Pre-bonded to the inside face of the joint bars, smooth with no stamping or branding.

   b. High pressure and laminated design.

   c. Impervious to oil, grease, and water.

   d. Electrical resistance characteristics: Equal to or greater than fiber insulation meeting the requirements of the AREMA Signal Manual Part 14.5 and the Electrical Resistance Test, as specified herein.

   e. End posts: 3/16-inch thick, and not extend below the base of the rail.

   f. Color:

      1) The following are acceptable insulation material colors:

         a) Black, grey, white, green, blue, beige

      2) The following are not allowed for insulation material colors:

a) Red, orange, yellow

3) Painting of rail at rail joint shall be with UV resistant paint and shall be the same color as the insulation material.

a) Prior to application of paint, surface of rail at the rail joint shall be cleaned.

5. Pin Bolts:

a. Use to fasten bonded insulated joints for 115 RE rail together.

b. Use six (6) pin bolts per joint.

c. Meet the chemical composition and mechanical property requirements of ASTM F3125/F3125M.

d. Pins: High strength pin bolts, with button heads, made of medium carbon-steel.

e. Collars: Tension type made of low carbon steel.

f. Driven with a special driving tool for the pin bolts:

1) Capable of partial swaging of the collars to allow for some adjustment during the bolting process.

2) Capable of swaging the collar into angular locking grooves, forming the collar into the size and shape recommended by the Supplier before the pin tail breaks.

3) Capable of producing the minimum installed fastener tension recommended by the joint Supplier.

g. Bolt holes: Sized in accordance with the bonded insulated joint Supplier's recommendation.

6. Washers:

a. ASTM F436/F436M hardened washers.

b. A washer must be placed between the joint bars and the pin's head and collar if a bolt hole's diameter is larger than 1-3/16 inches.

7. Adhesive:

a. Shall have shelf life and minimum strength per AREMA, Section 3.8, Specifications for Bonded Insulation Rail Joints when stored in a location protected from the weather at a temperature which may vary from 40 degrees F to 90 degrees F.

b. Replace adhesive at no additional cost to Sound Transit if the adhesive is found to be defective within 1 year from the date of delivery.

B. Bonded Insulated Joint Plug Rails:

1. Bonded insulated joint plug rails:

a. 19 foot and 6 inches minimum length with a 9-foot and 4-inch minimum short end and a 10-foot and 2-inch minimum long end.

b. Shall be sized such that use of thermite welds is minimized.

2. Rail: Rail for the bonded insulated joint plug rails shall be 115 RE High-Strength rail in accordance with AREMA Manual, Chapter 4.

C. Curved Bonded Insulated Joints:

1. Curved bonded insulated joints shall conform to the specifications for bonded insulated joints except as noted below:

a. Curved bonded insulated joints shall be used when track curve radius is equal to or less than 500 feet.

2. Use curved bonded insulated joint kits from one the following manufacturers:

a. L.B. Foster.

b. Progress Rail.

c. approved equal.

3. Joint Bars:

a. Provide full face tolerance within the manufacturer's tolerances.

2.02 MATERIALS

A. Standard and Restraining Rail Joints:

1. Joint bars shall be shaped to fit 115 RE rail with standard or/and high resilient fasteners. Standard Joint bars shall be 36-inches long with six (6) holes and restraining rail joint bars shall be 24-inches long with four (4) holes. Only toeless joint bars are acceptable for use:

a. Bolt hole shape, size, and location shall conform to Contract Drawings.

2. Bolts, nuts, and lock washers shall confirm to the Contract Drawings.

2.03 SOURCE QUALITY CONTROL

A. Bonded Insulated Joint Qualification Test Requirements:

1. Do not commence testing before Technical Data and installation procedures have been accepted by the Resident Engineer.

2. Test bonded insulated joints in accordance with AREMA Volume 1, Chapter 4, Rail, Section 3.8 Specifications for Bonded Insulation Rail Joints and as specified herein:

a. Equivalent tests achieving the specified results on the exact same joint, and rail, will be acceptable if tests are within 2 years of performing the Work.

b. Electrical Resistance Test:

1) Support the rail on dry, non-electrical conducting material.

2) Apply 500 volts dc to the rail on either side of the bonded insulated joint for a duration of 3 minutes, measure the actual current flow through the joint to the nearest 0.1 microampere and record:

a) Acceptance Criteria: Minimum resistance is 10 megohms.

3) Apply a potential of 50 volts ac to the rail on either side of the joint for a duration of 3 minutes for each increment of measurement for frequencies from 20 hertz to 10 kilohertz. Measure the impedance after 3 minutes with an accuracy of plus or minus 2 percent and record for each frequency:

a) Acceptance Criteria: Minimum impedance is 10,000 ohms.

c. Additional Post Tests:

1) Repeat Electrical Resistance Test and meet the acceptance criteria.

PART 3 - EXECUTION

3.01 PREPARATION

A. Cut rails square and clean by means of either saws or abrasive cutting disks.

B. Deburr and remove rough edges for bolt holes.

C. Field end harden rails, other than high-strength rails that are not end-hardened at the mill:

1. Remove joint bars and associated insulating materials from rail ends during end-hardening process.

D. Clean the end 21-inches of the web, bottom of head, and top of base of each rail of foreign materials, loose rust, and scale.

E. For bonded joints, clean to near white metal in accordance with SSPC SP 10. Grind raised mill marking within the 21-inch distance flush with the web.

F. Protect insulated joints by painting insulated joints with UV resistant paint.

3.02 INSTALLATION

A. Accurately space holes for bolting of rail and drill with a rail drill in accordance with the requirements or AREMA Manual, Chapter 4, Part 3:

1. Drill cylindrical holes of specified diameter for the size of the bolt required through and perpendicular to the web of the rail.

2. Use a template as a drilling guide. In no case shall a joint bar be used for this purpose.

B. Joints, including insulated joints, shall not be located opposite each other on the same track. Joints shall be staggered at least 2-feet, but not more than 2-feet 6-inches, from the joint on the opposite rail, unless otherwise noted on the Contract Drawings.

C. Bonded Joints:

1. Install bonded joint at the locations indicated and as required by the signal system. Position joint so that center of the joint is approximately centered between rail supports.

2. Calibrate bolt-tightening equipment.

3. Install joint in accordance with the Supplier's instructions and the following:

a. Alternate directions of bolt insertion.

b. Ensure that there is no contact between joint bars or bolts and rail fasteners.

c. Where bonded insulated joint conflicts with standard spring clip placement, use E-2063 spring clip.

D. Bonded Insulated Joints:

1. Locate bonded insulated joints as indicated on the Contract Drawings and approved special trackwork shop drawings.

2. Install bonded insulated joints in accordance with Supplier's instructions.

3.03 FIELD QUALITY CONTROL

A. Test the resistivity across the insulating components of each joint after the installation and all welding has been completed in the field. Repeat the Electrical Resistance Test and meet the acceptance criteria specified.

END OF SECTION

FIGURES (On Proceeding Pages)

1. **Figure 1** - Bonded Joint Clearance Envelope

FIGURE 1

BONDED JOINT CLEARANCE ENVELOPE

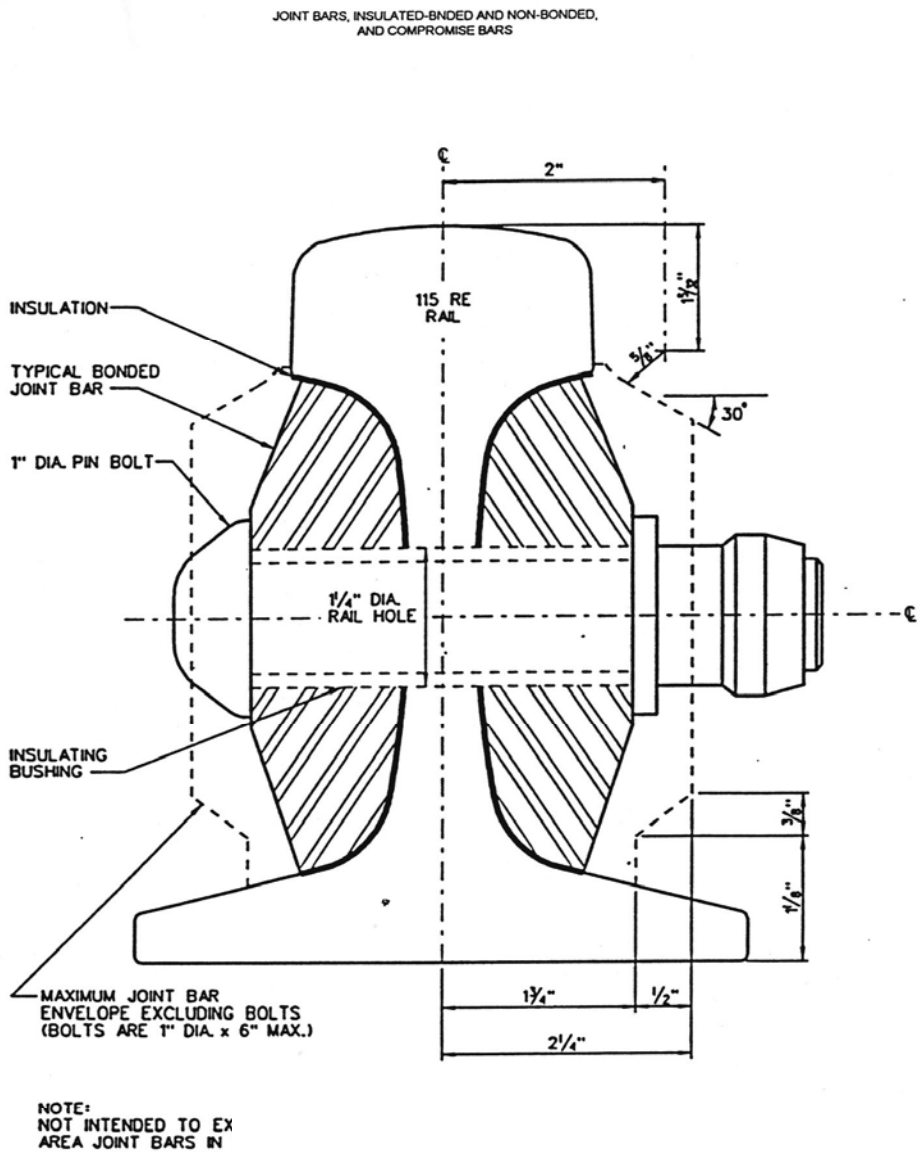

BONDED JOINT CLEARANCE ENVELOPE
FIGURE 1

END OF FIGURES

SECTION 34 11 23

SPECIAL TRACKWORK

PART 1 - GENERAL

1.01 SUMMARY

A. Section includes:

1. Requirements for furnishing all labor, materials, and equipment for the designing, manufacturing, testing, fabricating, shipping, handling and unloading of new special trackwork, consisting of all turnouts, crossovers (double or single, including all trackwork between crossover frogs), crossing diamonds and crossing frogs, and of the portions thereof; all switches (including switch point rails, stock rails), frogs, diamond crossings, restraining rails, guard rails, guard rail plates, switch plates, frog plates, standard plates for single rail, lead rails, closure rails and bonded (IJ) insulated joints, and associated connecting track work parts and all miscellaneous materials required.

1.02 REFERENCES

A. This Section incorporates by reference the latest revisions of the following documents:

1. American Railway Engineering and Maintenance-of-Way Association (AREMA):

a. AREMA Manual for Railway Engineering (AREMA Manual).

b. AREMA Portfolio of Trackwork Plans (AREMA Plans).

2. Association of American Railroads (AAR):

a. AAR Manual of Standards and Recommended Practices.

3. ASTM International (ASTM):

a. ASTM F3125/F3125M Standard Specification for High Strength Structural Bolts, Steel and Alloy Steel, Heat Treated, 120 ksi (830 MPa) and 150 ksi (1040 MPa) Minimum Tensile Strength, Inch and Metric Dimensions.

b. ASTM B633 Standard Specification for Electrodeposited Coatings of Zinc on Iron and Steel.

c. ASTM D2240 Standard Test Method for Rubber Property – Durometer Hardness.

d. ASTM E10 Standard Test Method for Brinell Hardness of Metallic Materials.

e. ASTM E94 Standard Guide for Radiographic Examination.

4. American Welding Society (AWS):

a. AWS D1.1/D1.1M Structural Welding Code – Steel.

5. American Institute of Steel Construction (AISC):

a. AISC Steel Construction Manual.

6. American Society of Mechanical Engineers International (ASME):

   a. ASME B18.21.1 Washers: Helical Spring-Lock, Tooth Lock, and Plain Washer (Inch Series).

1.03 SUBMITTALS

A. Submit:

1. Submit detailed special trackwork Technical Data, including shop drawings, bill of materials, supporting drawings, and design calculations, for all special trackwork and components.

2. Prior to the delivery of special trackwork, the Contractor shall submit a plan for special trackwork grouping, packaging, handling, loading, and transportation.

3. Quality Control Plan.

4. Spare Parts: Furnish spare parts in accordance with the Contract Documents or as specified herein. Additional spare parts and changes are subject to review by Sound Transit. Spares are to be designed and furnished for compatibility, interchangeability, and ease of future maintenance (i.e. “maintenance length”).

B. Transmit:

1. Complete list of Suppliers and Manufacturers for all special trackwork and components, including Quality Control Program for each:

   a. Name of steel mill and certifications of rail and year rolled.

   b. Name of supplier and certifications for flat bar stock steel used for steel plate fabrication.

   c. Documentation of qualified welders that will be welding on this track work.

   d. Documentation of the analysis for all track accessory parts, track bolts, spring washers, and joint bars as per AREMA Chapter 4 specifications.

2. Installation and maintenance instructions for all special trackwork and components.

3. Rail inspection results in accordance with track rails .

4. Frog depth hardening test, documentation of the Radiographic Testing of the Frog castings as per AREMA Plan No. 1012-03, and inspection results:

   a. Documentation of the analysis of Manganese Steel as per current AREMA specifications.

1.04 QUALITY ASSURANCE

A. Develop and maintain a quality control program regulating methods, procedures, and processes to ensure compliance with specified quality standards, including inspection and testing, samples and use of certificates of compliance.

B. Qualifications:

1. Manufacturer/Supplier shall possess a proven track record of manufacturing of quality railway material. Qualification to be provided upon request.

C. Certification of Special Trackwork:

1. Manufacturer/Supplier shall possess a record of inspection which will certify condition prior to shipment and for the Resident Engineer, to be provided upon request:

a. Documentation of both running rail gage, back-to-back gage, guard check and guard face gages after complete assembly.

b. Documentation of inspection of turnout crossties / fasteners that are specified in this Contract.

c. Documentation of inspection of welds for fabrication of plates.

d. Documentation of inspection of all rail welds.

e. Progress photos.

1.05 DELIVERY, STORAGE, AND HANDLING

A. The entire special trackwork elements and assembly shall be match marked, banded and palletized prior to shipment.

B. Carefully handle rail and special trackwork components to prevent damage, do not drop or strike rails and components.

C. For components pre-assembled for inspection prior to shipment, including frogs, diamond crossing, and other components shall ship in complete partial subassemblies. Contractor is responsible for shipping special trackwork subassemblies in sizes that can be delivered to proposed locations, possibly through tunnels, under and on bridges.

D. Ship small loose parts in secure containers shipping boxes or kegs. Do not ship in cardboard boxes or pallets that are not fully banded. Loose items for shipping will not be accepted.

E. Clearly mark or tag assembled parts, pallets, bundles, boxes, and kegs in the appropriate turnout identification color with the following: Identify items contained, Contractor's name, shipping date, number of pieces, destination, gross weight, turnout designation, and special trackwork unit for which parts are intended.

PART 2 - PRODUCTS

2.01 MANUFACTURED PRODUCTS

A. Switch Appurtenances:

1. Switch points:

a. 5100 (Samson) switch point design in accordance with AREMA Plans, and No. 221.

b. Uniform riser design with runoff beyond the heel of switch in accordance with AREMA Plans, No. 123.

c. Reinforced on both sides with 1/2 - inch thick d-bars, drilled and assembled to the switch points by square head bolts, hex nuts and cotter pins. Pin bolt assembly is not acceptable.

d. Provide a continuous contact with stock rail the length of the machined point rail face adjacent to the stock rail in accordance with AREMA Plans to ensure a proper fit.

e. Bear on slide plates as shown by grease marks and feeler gages in the thrown operating position.

2. Direct fixation track construction turnouts:

a. Switch rods shall be insulated vertical design and in accordance with AREMA Plans, No. 222.

b. Equipped with vertical rod type MJ clips with bolts, security locknuts and cotter pins.

c. Adjustable switch rods:

1) Throw: 4-inches to 5-inches.

2) Clearance between the top of switch rods and base of stock rails: 3/16-inch maximum.

3) Project under and beyond the stock rail base in both thrown positions.

3. Floating heel block assembly (Two-Bolt): Design in accordance with AREMA Specifications for Special Trackwork, Article M3, Carbon Steel Castings.

a. Floating heel block shall be uniform riser in accordance with AREMA Plans, No. 221.

4. Rail brace supports:

a. Adjustable boltless brace assembly for elastic fasteners, as shown on AREMA Plans, No. 224, at locations indicated.

b. Type A as shown on AREMA Plans, No. 224 or an approved equal.

c. Modified as required to permit the installation of switch point heaters under the head of the stock rail.

5. Switch point stops:

a. Shall be of sufficient height to bear against the supporting stock rails when points are in the thrown positions.

b. Shall be in accordance with AREMA Plans, No. 221, for uniform riser.

6. Joint Bars: Refer to track rail joints requirements.

7. Track bolts, hex head bolts, square head bolts, security locknuts, and washers:

a. Per AREMA Manual and AREMA Plans.

8. Metal components:

a. Corrosion-resistant and consistent with strength and hardness requirements.

b. Not brittle, and able to withstand handling at minus 20 degrees Fahrenheit.

c. Sufficiently ductile to withstand installation and maintenance activities. For iron castings use ductile iron.

9. Spring clips: Right-hand mounted and considered part of the switch plate or direct fixation plates.

a. Spring or elastic clips, shall have nominal 2750 pounds clamping force (toe load) with 7/16 inch clip toe load working deflection.

10. Direct Fixation Special Trackwork Switch Plates.

B. Frogs:

1. Rail Bound Manganese (RBM) or Welded Boltless Manganese (WBM).

a. Manganese steel castings as specified in AREMA Plan 100 – Specifications for Special Trackwork, Article M2:

1) Depth hardened.

2) Radiographic testing and/or sectioning will be used to qualify castings for acceptance of internal soundness – in accordance with the AREMA Plans and Specifications for Special Trackwork.

b. Designed by the special trackwork manufacturer.

c. RBM turnout frogs shall conform to AREMA Plans 621 and 623.

d. RBM crossing frogs shall conform to AREMA Plan 750.

2. Frog plates:

a. Designed and furnished by the special trackwork manufacturer.

C. Frog Guard Rails:

1. Manufactured in accordance with the Contract Documents.

2. 115 RE Section, machined and drilled to guard rail lengths.

3. Furnished with the accessories as indicated on the Contract Documents:

a. Separator Blocks: Malleable or ductile iron.

4. Flangeway:

a. 1-5/8-inches, fully adjustable to increments of a maximum of 1/8-inch.

b. Width: 1-1/8-inches to 1-5/8-inches, when used with unworn rail.

c. End block and separator blocks: Allow adjustment of the flangeway width.

5. Frog Guard Rail Bolt:

a. High strength, conforming to the requirements of ASTM F3125, or Grade 8, and class 2A and 2B thread fit.

b. Use a steel spring washer or equivalent spring device as positive means of preventing the loosening of the element due to in-service vibrations.

6. Fasteners: Designed as indicated in the Contract Documents.

D. Rail Fastener Assemblies:

1. Spring Clips:

a. Boltless, right-hand mounted, threadless and resilient design able to recoil back into shape after bending.

b. Spring or elastic clips, shall have nominal 2750 pounds clamping force (toe load) with 7/16 - inch clip toe load working deflection.

c. Permit removal of the rail, switch, or frog without the removal of plate's anchor bolt assembly.

E. Special Trackwork Turnouts:

1. As indicated on the Contract Documents and approved Technical Data including materials necessary to provide a complete installation and the required turnout spare parts.

2.02 MATERIALS

A. Rail:

1. Running rail for switch, frog, stock, closure, guard and lead rails for special trackwork and precurved:

a. New 115 RE in accordance with AREMA Manual.

b. Head hardened to meet the hardness requirements of high strength rail, as specified in AREMA Manual, Chapter 4, Part 2, Section 2.1 – Specifications for Steel Rails.

c. Accompanied by Supplier's records of rail inspection as described in AREMA Manual, Chapter 4, Part 2, Section 2.1, Article 2.1.14 – Acceptance.

2. Guard rails for frog and diamond crossing:

a. 115 RE Section machined and drilled to guard length.

b. Head hardened to meet the hardness requirements of high-strength rail, as specified in AREMA Manual, Chapter 4, Part 2, Section 2.1 – Specifications for Steel Rails.

3. Stock rail:

a. Undercut Stock Rail to suit the 5100 (Samson) switch point design in accordance with AREMA Plans No. 221.

b. All rails to be high strength carbon steel rail and head hardened as per AREMA Manual.

c. Stock rails are to be shop curved/bent and fabricated to the alignment and switch design specified as per the AREMA Plans for uniform riser

and curved split switch with respect to the switch alignment in accordance with the design.

d. Stock rail undercut round-out shall be rounded and provide sufficient and smooth transition ahead and in front of the P.S. (Point of Switch).

e. Undercut to be on the opposite side of the Rail Branding / Stamping.

f. Use stock rails of sufficient length to provide thermite welds clear of the switch area.

4. Lead rails and closure rail: Lengths and curvatures based upon the geometric data shown on the Contract Documents and Technical Data.

5. Switch point rail for special trackwork: As indicated, fit the curved switch point for lateral track movement with a manganese protective wear point.

a. Switch point rail for mainline track construction: Floating heel block design, with uniform riser.

b. Throw of switch: Distance through which the points of switch rails move sidewise and measured along the center line of the No. 1 switch (throw) rod shall be 4–3/4-inches.

c. Curving and planing of switch points and undercutting of stock rail: properly bind the switch points into the stock rail within the full length of the required side-planing length to ensure proper fit and contact. Design switch point to allow adjustment of the “throw of switch” from 4-1/4-inches to 4-3/4-inches width and to gradually narrow the throw width to a flangeway width of 1-5/8-inches (minimum) after the switch points are in either thrown positions.

B. Track Joints:

1. Thermite welded and bond insulated as indicated on the Contract Documents and Technical Data.

2. Install bond insulated joints in accordance with requirements.

C. Spare Parts:

1. As specified in the Contract Documents.

D. Switch lubricant:

1. Lubricate with dry graphite, insulating film-type such as Dixon 500, Whitmore Easy Switch, Superior Graphite Co. or an approved equal as instructed by the Supplier.

2.03 FABRICATION

A. General:

1. Special work component and track appurtenance dimensions shall provide an accurate fit and uniform bearing surfaces at all points. Fabricate special trackwork components out of new materials in accordance with AREMA Manual, and AREMA Plans.

2. All rails with milling and machining surfaces shall be clean cut with smooth finish. The Vendor shall prevent any milling and machining issues that could degrade

the machined surface quality. Any special track work milling and machining rail surface conditions with any unsmooth, wavy, rough, uneven finishes (including any unintentional bumps or grooves), torn or ragged edges may be rejected.

3. Insulate special trackwork to restrict stray current leakage.

4. All top rail surfaces on the frog shall be free of epoxy or any other bonding/insulating material overflown on any of the running and gage surfaces.

5. Construct special trackwork with zero cant throughout the installation.

6. Switch point:

   a. Mate and rest under the undercut stock rail.

   b. Provide a continuous contact with stock rail the length of the machined point rail face adjacent to the stock rail.

   c. Bear on slide plates as shown by grease marks and feeler gages in the thrown operating position.

7. Track and Special Trackwork Tolerances: Refer to track construction tolerances.

   a. AREMA Plan No. 1020 Permissible Variations in completed switch points

   b. AREMA Plan No. 1021 Permissible Variations in completed steel frogs

B. Rail Precurving:

1. Perform precurving of rail to industry frog and switch shop procedures in accordance with the track centerline radii. Precurve rail such that after curving the base of rail lies level or flat when positioned on the switch or tie plate. Do not use the fastening to draw the base down.

C. Rail Cutting, Drilling, and Beveling:

1. Cut rails square and clean by means of rail saws or abrasive cutting wheels in accordance with AREMA Manual, Chapter 4, Part 2.

2. Where required, drill rail ends for 36-inch, 6-hole bonded insulated joint as shown on approved Technical Data and in accordance with the AREMA Manual Chapter 4, Part 1. Grind drilled bolt holes to remove sharp edges.

D. Frog Depth Hardening:

1. Explosive depth hardened or otherwise treated castings in accordance with the AREMA Specifications, Article M2.7, except attain a minimum Brinell hardness of 370. After the castings are hardened, employ an approved Independent Testing Laboratory to inspect each casting as follows:

   a. Visually inspect or penetration test for cracks, flaws, or porosity.

   b. Test hardness in accordance with ASTM E10.

2. On Technical Data specify the procedures to be used in the depth hardening process, the portions of each frog that are to be depth hardened, and the Brinell hardness pattern that the Manufacturer normally achieves with such procedures.

3. Repair defective castings damaged as a result of this inspection as specified herein. Re-harden castings rejected for lack of hardness at no additional cost to

Sound Transit. Defects detected in the immediate wheel running surfaces of the castings will be rejected and not be repaired. Replace non-repairable castings at no additional cost to Sound Transit.

4. Repair defects in the castings in accordance with the AREMA Specifications Article M2.6. Repair defects only by shielding manual arc welding or semi-automatic arc welding, in accordance with AWS D1.1/D1.1M. Use only manganese filler to repair defective areas.

5. After weld repairs, employ an approved Independent Testing Laboratory to re-inspect the repaired areas of the castings in accordance with ASTM E94 and determine the acceptance of the castings.

6. The tolerance for Brinell hardness is minus 10 Brinell points. The maximum hardness is unlimited, but subject to metallurgical steel structure detriment to the product.

2.04 SOURCE QUALITY CONTROL

A. Prior to shipment, completely assemble each turnout and diamond crossing with direct fixation fasteners installed and all fastenings shop tightened. Mount each turnout in a uniform plane throughout the length of the turnout or crossing to allow inspection and measurement. Assemble components designed for field welding to final alignment using appropriate fasteners and clamps:

1. The manufacturer shall assemble each special work on a true horizontal and cross leveled surface. The special trackwork shall bear evenly at all points of contact for fabrication and prior to inspection.

B. Place special trackwork fasteners at locations shown on the Contract Documents and approved Technical Data. Mark base of rail with waterproof/weather resistant paint to indicate design and assembled location of plates or fasteners.

C. Provide the Resident Engineer with templates to check flangeways, rail end drilling, and switch rail planing. Design templates such that using the templates will be easy and quick, requiring only one (1) person for the operation and not change in dimension due to temperature, moisture, or time.

D. Completely install bonded insulated joints prior to inspection. Install bonded insulated joints without adhesive.

E. No bracing is allowed to hold components to proper gauge during the shop inspection process other than permanent gauge plates. Grind smooth rail branding and rail web surface within 2-feet of rail ends at joint bars and sand blast prior to placement of joints.

F. Note approved variations from the dimensions, lengths, or angles shown on the previously approved Shop Drawings on the final Shop Drawings submitted for subsequent installation. Conformed Shop Drawings are to be submitted to ensure accuracy and records.

G. Paint identification on the web of rails, clear of joint bar area, at both ends according to the rail layout details shown. Paint rail joint members on the head of each rail at every joint. Do not confuse installation identification numbers with internal shop work order numbering system. Only paint installation numbers on track items:

1. Special trackwork shall be identified with shop marks, match marks and/or stainless steel (or brass) ID tags:

a. Shop marks shall designate the number of the portion, the connecting trackwork part, the trackwork piece or the miscellaneous material identity.

b. Match marks shall designate adjoining track work parts, track work pieces and miscellaneous material at all joints and at their intended locations. The match marks shall correspond with the markings indicated on the manufacturer's Shop Drawings.

c. Shop marks and match marks shall be applied by means of paint markers, of different Color contrast capable of being distinguished. All marks shall be clean and legible to permit proper assembly in the field. All paint / marks are to be waterproof and weather resistant.

H. For inspection of the turnout switches on direct fixation track, include the operation (hand thrown at the first temporary switch rod) to confirm function and proper position of switch points in relation to the stock rail (switch points shall nestle with stock rail within the full length of the required side planing length), switch point stops, and proper opening at separation of heads.

I. Check switches and moveable part in both thrown positions for conformance with the approved switch and frog geometry. Verify tolerances meet the applicable requirements as stated in the AREMA Plans, No. 1011.

J. Inspect spare parts components during the trackwork inspection. Position spare parts adjacent to the turnout component for inspection comparison. For identification, paint spare parts "Spare Part" with turnout data and Contract Number on both sides of the component on the rail web.

K. Notify the Resident Engineer not less than 30 days before the required date for shop inspection of the completed, assembled turnout with identification markings. Reconfirm one (1) week ahead of Resident Engineer arrival that the assembly shall be completely assembled, checked by the fabricator’s QC organization and all corrective actions taken before the Resident Engineer arrives.

L. After satisfactory inspection and testing with the switch completed, disassemble the switch machine from the switch to the degree necessary for shipment. Package loose materials in the Supplier’s original containers:

1. Locations marks to be provided for lifting purposes on all rails, frogs and pallets with approximate weight in pounds.

2. All items other than the switch package (smaller components such as braces, plates and bolts) shall be shipped to site in plastic, weatherproof drums with securable, locking lids (Add weatherproof bar codes/description on all material).

3. Material shall be fully protected from damage at all times.

PART 3 - EXECUTION (NOT USED)

END OF SECTION

SECTION 34 11 26.13

TRACK BALLAST

PART 1 - GENERAL

1.01 SUMMARY

A. Section includes:

1. Requirements for furnishing, testing, handling, and transporting mineral aggregate for track ballast and infill ballast.

B. Ballast shall be placed and installed in accordance with track construction requirements.

1.02 REFERENCES

A. This Section incorporates by reference the latest revisions of the following documents:

1. American Railway Engineering and Maintenance of Way Association (AREMA):

a. AREMA Manual for Railway Engineering (AREMA Manual).

2. ASTM International (ASTM):

a. ASTM C29/C29M Standard Test Method for Bulk Density (“Unit Weight”) and Voids in Aggregate.

b. ASTM C88/C88M Standard Test Method for Soundness of Aggregates by Use of Sodium Sulfate or Magnesium Sulfate.

c. ASTM C117 Standard Test Method for Materials Finer Than 75-µm (No. 200) Sieve in Mineral Aggregates by Washing.

d. ASTM C127 Standard Test Method for Relative Density (Specific Gravity), and Absorption of Coarse Aggregate.

e. ASTM C136/C136M Standard Test Method for Sieve Analysis of Fine and Coarse Aggregates.

f. ASTM C142/C142M Standard Test Method for Clay Lumps and Friable Particles in Aggregates.

g. ASTM C535 Standard Test Method for Resistance to Degradation of Large-Size Coarse Aggregate by Abrasion and Impact in the Los Angeles Machine.

h. ASTM C702/C702M Standard Practice for Reducing Samples of Aggregate to Testing Size.

i. ASTM D75/D75M Standard Practice for Sampling Aggregates.

1.03 SUBMITTALS

A. Submit:

1. Ballast Gradation Report:

a. Contractor shall submit the ballast gradation reports, ballast test reports as per the AREMA Manual for Railway Engineering (MRE), Chapter 1, Part 2 BALLAST and specified herein, including the Sieve Analysis in accordance with the current AREMA Ballast Sizes for each batch supplied.

2. Plan for Transporting, Handling, and Placing:

a. Prior to the delivery of ballast, the Contractor shall submit a plan for ballast transportation from the source, handling, stockpiling, and final distributing and placement of ballast: including the location of stockpiles and the identification, quantity, and handling/hauling equipment. The Vendor is to ensure the processed ballast must be cleaned and/or rescreened as necessary to remove fine particle contamination in accordance with AREMA.

3. Transition Slab Ballast Mat Qualifications:

a. Submit the manufacturer's current published installation instructions and detailed written procedures. The documents shall address the following items:

1) Identification of material to be used by product number and description.

2) Shipping, storing, and handling.

3) Equipment identification, operation, and maintenance.

4) Surface preparation to attain bond.

5) Mixing, applying, and curing.

6) Weather conditions:

a) Public Safety.

b) Touch-up and repair.

c) Quality control implementation.

4. Quality Control Plan.

B. Transmit:

1. Subballast Readiness Report:

a. Prior to the placement of ballast or other construction on the subballast, the Contractor shall transmit a report documenting and confirming the readiness of the subballast:

1) The Contractor shall document the existing condition of the in-place subballast including documentation of line, grade, cross section, and compaction.

2. Ballast Structure Readiness Report:

a. Prior to the placement of ballast, ballast mat, or other construction of the ballasted track section the Contractor shall transmit a report documenting and confirming the readiness of the structure surface:

1) The Contractor shall document the existing condition of the in-place structure including documentation of line, grade, cross section, and surface quality.

3. Ballast Qualification Test Reports:

a. Prior to the delivery of ballast, the Contractor shall transmit a report documenting and confirming ballast qualifications:

1) Ballast qualification test reports for ballast gradation and testing requirements shall be as per the AREMA Manual for Railway Engineering (MRE), Chapter 1, Part 2 BALLAST and as specified herein. The Contractor shall engage an independent testing agency to test the ballast at the quarry source to ensure that the classification, quality, and gradation of the ballast at the time of delivery conforms to the specified requirements.

1.04 QUALITY ASSURANCE

A. Develop and maintain a quality control program regulating methods, procedures, and processes to ensure compliance with standards of quality, including inspection and testing, samples, and use of certificates of compliance.

1.05 DELIVERY, STORAGE AND HANDLING

A. Delivery: Load only into rail cars or trucks that are in good order, tight enough to prevent leakage and waste of material, and clean and free from deleterious or any substance that may foul or contaminate the ballast.

B. Storage: If material is stock piled or stored off-site or on-site, take necessary steps to maintain ballast gradation and keep clean and free from deleterious or any substance that may foul or contaminate the ballast.

C. Handling:

1. Handle prepared ballast at the producing plant, during shipment, and at the site so that it is kept clean and free from segregation. Ballast containing any substance that may foul or damage the ballast will be rejected.

2. Do not make repeated passes of equipment over the same level in the stockpile area.

PART 2 - PRODUCTS

2.01 MATERIALS

A. Ballast:

1. Provide prepared ballast of crushed stone composed of hard, strong, angular, and durable particles. Ballast shall contain no carbonates, slag, or limestone. The ballast shall be free from deleterious substances and conforming to the requirements of the AREMA Manual, Volume 1, Chapter 1, Part 2, except as defined or modified herein:

a. All ballast and walkway rock shall be new. Use of recycled ballast or cleaning and reuse of removed on-site ballast shall not be allowed.

2. Properties:

a. Gradation Requirements:

1) Track ballast shall conform to AREMA requirements for ballast gradation No. 3.

2) Infill ballast, walkways, and access areas at turnouts shall conform to AREMA requirements for ballast gradation No. 5.

b. Ballast Testing Requirements:

1) Track ballast shall conform to the AREMA Manual, Volume 1, Chapter 1, Part 2 - Ballast, Property Requirements.

2) Track ballast tests and values shall conform to the AREMA Manual, “Table 1-2-1. Recommended Limiting Values of Testing for Ballast Material", as per specified in the AREMA Chapter 1, Part 2, Limiting Test Values, with respect to the type of Ballast Material used as per specified. Ballast material containing carbonates, slag, or limestone are prohibited.

c. Unit Weight: Dry rodded unit weight shall be greater than 90 pounds per cubic foot, determined in accordance with ASTM C29/C29M.

B. Transition Slab Ballast Mat:

1. Ballast mat at transition slabs shall consist of natural rubber with fabric reinforcement designed to provide a reduction in the impact on structures of ground or structure-borne vibrations and in the crushing of ballast. The upper surface of the mat shall be textured to permit ballast to nest for track bed stability and shall contain synthetic elastomers for protection against attack by contaminants that may filter through ballast over time. The subsurface shall contain fabric reinforcement for strength and load distribution. Its underside shall provide a regular pattern of projections that provide load distribution, e.g. ridges, cones, etc.

2. Ballast mat material shall conform to the following requirements:

a. Minimum Capacity Axle load: 12 tons.

b. Dimensions:

1) Width no less than 48 inches not including joint overlaps.

2) Minimum Thickness: 1-3/16 inches.

3) Length: 30 feet maximum.

c. Fabric (Fiberglass-coated PVC):

d. Type: Woven fiberglass:

1) Minimum Tensile Strength: 60 psi.

2) Elongation at Break is greater than or equal to 10 percent.

e. Elastomer Properties (natural rubber unless otherwise approved).

f. Top Layer (synthetic): 3/16 inch, 1-ply fabric.

g. Isolating Layer Minimum Thickness: 1 inch.

h. Ballast Mat:

1) Minimum Tensile Strength: 200 psi.

2) Elongation at Break: 125 percent.

3) Minimum Tear Resistance: 50 pounds/inch.

4) Hardness (Shore A): 53 (plus or minus 7).

i. Dynamics: Dynamic to static stiffness ratio K_d related to a preload of 85 psi is equal to an allowable range between 0 and 1.5, with desirable of 1.4.

j. Temperature Range: Standard quality is suitable for service where ballast mat temperatures range between minus 0 degrees Fahrenheit and plus 150 degrees Fahrenheit.

3. The material used for sealing of the ballast mat joints shall be an integral extension of the top surface of the mat or separate material having strength characteristics equal to those of the top layer of the ballast mat.

2.02 SOURCE QUALITY CONTROL

A. The Contractor shall establish the ballast quality, grading, and washing requirements at the time of delivery to ensure that the ballast conforms to the requirements when installed in track.

B. Test Samples: A field sample not less than 150 pounds shall be taken from the quarry of prepared ballast in accordance with ASTM D75/D75M. Test samples shall be reduced from field samples to testing size in accordance with ASTM C702/C702M.

PART 3 - EXECUTION

3.01 INSTALLATION

A. Ballast and transition slab ballast shall be installed, including but not limited to preparation, inspected, and tested as stated elsewhere in the Contract Documents.

B. Ballast mat and transition slab ballast mat shall be installed on ballast structures and where indicated on Contract Drawings.

END OF SECTION

SECTION 34 11 26.16

TRACK SUBBALLAST

PART 1 - GENERAL

1.01 SUMMARY

A. Section includes:

1. Requirements for furnishing, testing, handling, and transporting aggregate for track subballast.

B. This Section is applicable to work required for placement of new subballast, and restoration or repair of existing subballast damaged or disturbed by other work.

C. Subballast shall be furnished, placed, and installed, as a part of track construction.

D. Subballast is to be capable of providing drainage out of the track, reduce applied stress and distribute to the subgrade, provide separation between the track ballast and subgrade, and in cold climates provide frost protection to the subgrade.

1.02 REFERENCES

A. This Section incorporates by reference the latest revisions of the following documents:

1. ASTM International (ASTM):

a. ASTM D75/D75M Standard Practice for Sampling Aggregates.

b. ASTM C702/C702M Standard Practice for Reducing Samples of Aggregate to Testing Size.

2. Washington State Department of Transportation (WSDOT):

a. WSDOT Standard Specifications for Road, Bridge, and Municipal Construction (WSDOT Standard Specifications).

b. WSDOT Materials Manual:

1) WSDOT FOP for WAQTC/AASHTO T 27/T 11, Sieve Analysis of Fine and Coarse Aggregates.

2) WSDOT Test Method T 606, Method of Test for Compaction Control of Granular Materials.

1.03 SUBMITTALS

A. Submit:

1. Subballast Qualification Test Reports:

a. The Contractor shall engage an independent testing agency to test the subballast at the quarry source to ensure that the classification, quality, and gradation of the subballast at the time of shipment conforms to the specified requirements. Conduct sieve analysis for aggregates in accordance with WSDOT Materials Manual T 27/T 11.

2. Plan for Transporting, Handling, and Placing:

a. Prepare a plan for proposed transporting from the source, handling, stockpiling, and final distribution and placing of subballast in track, including the location of stockpiles and the identification, quantity, and handling/hauling equipment including year, hours, and condition.

3. Quality Control Plan.

1.04 QUALITY ASSURANCE

A. Develop and maintain a quality control program regulating methods, procedures, and processes to ensure compliance with standards of quality assurance/quality control, including inspection and test, samples, and use of certificates of compliance.

1.05 DELIVERY, STORAGE AND HANDLING

A. Delivery: Load only into rail cars or trucks that are in good order, tight enough to prevent leakage and waste material, and clean and free of deleterious or any substance that contaminates the subballast.

B. Storage: If material is stock piled or stored off-site or on-site, take necessary steps to maintain subballast gradation and keep clean and free from deleterious or any substance that fouls or contaminate the subballast.

C. Handling:

1. Handle prepared subballast at the producing plant, during shipment, and at the site so that it is kept clean and free from segregation. Subballast containing any substance that can foul or damage the subballast will be rejected.

2. Do not make repeated passes of equipment over the same level in the stockpile area.

PART 2 - PRODUCTS

2.01 MATERIALS

A. Aggregate for subballast at the time it is deposited on the prepared subgrade or subbase shall conform to the following requirements:

1. Subballast shall consist of crushed stone or gravel, free from plant matter, and other deleterious substances.

2. Aggregate shall comply with WSDOT Standard Specifications Section 9-03.9(3) Crushed Surfacing Base Course.

2.02 SOURCE QUALITY CONTROL

A. The Contractor shall perform sampling and tests of the subballast material to determine compliance with specified requirements. Samples will be taken from material as delivered to the site.

B. A field sample not less than 150 pounds shall be taken from the quarry of prepared subballast in accordance with ASTM D75/D75M. Test samples shall be reduced from field samples to testing size in accordance with ASTM C702/C702M. Conduct sieve analysis for aggregates in accordance with WSDOT Materials Manual T 27/T 11.

PART 3 - EXECUTION

3.01 INSTALLATION

A. Subballast shall be placed, installed, compacted, and tested as a part of track construction.

END OF SECTION

SECTION 34 11 30

RAIL GRINDING AND POLISHING

PART 1 - GENERAL

1.01 SUMMARY

A. Section includes:

1. Requirements for rail grinding and rail polishing.

1.02 REFERENCES

A. This Section incorporates by reference the latest revisions of the following documents:

1. American Railway Engineering and Maintenance-of-Way Association (AREMA).

a. AREMA Manual for Railway Engineering (AREMA Manual).

2. International Standards Organization (ISO):

a. ISO 3095 Acoustics – Rail Applications -- Measurement of noise emitted by rail bound vehicles.

B. Definitions:

1. Contact Point Center (CPC): Specially designed rail head profile for Sound Transit's tangent track in open track area. This rail profile offsets the running band about 0.5 inches toward the gauge side of the rail.

2. Contact Point Field (CPF): Specially designed rail head profile for Sound Transit's tangent track in embedded track area. This rail profile provides a running band at the center of the rail head.

3. High Rail Curve (HRC): Specially designed rail head profile for Sound Transit's curved track's high rail. This rail profile has been designed to provide a one point conformal contact that provides for good steering to reduce flange wear and noise.

4. Low Rail (LOW): Specially designed rail head profile for Sound Transit's curved track's low rail. This rail profile is identical to the CPF, except that it extends only 35 degrees on the gauge side.

5. Right Rail: Facing the increasing track stationing number, the rail on the right side of the specified track.

6. Left Rail: Facing the increasing track stationing number, the rail on the left side of the specified track.

7. Transition Zone: A specified track section with changing the rail head profile continuously and uniformly over the whole section from one specified rail head profile at the beginning point to another specified rail head profile at the ending point.

1.03 SUBMITTALS

A. Submit:

1. Equipment for rail grinding, polishing and method of operation.

2. Pre-Grinding Inspection Report:

   a. Provide a pre-grinding inspection report prior to submitting the Rail Grinding Work Plan. Include rail profile information and rail running surface condition information for pre-grinding analysis of the rail, and clearly define rail profile conditions and rail running surface conditions. Use optical measurement equipment or equivalent technology to obtain rail profile information.

3. Rail Grinding Work Plan:

   a. Develop a Rail Grinding Work Plan. The Rail Grinding Work Plan shall include grinding locations, curve information, left and right rail, grinding profiles, grinding profile transition zones, number of grinding passes required, stone grit size, grinding speed, RPMs of grinding stone and total work time required for each grinding segment.

   b. Provide method to achieve and verify grinding tolerances.

   c. Provide Safety Plan of grinding equipment within Sound Transit's Vehicle Clearance Envelope. Include methods to protect all track and structural components from the damage caused by the grinding equipment and grinding equipment operations.

   d. Provide method for removal of materials from grinding from rail and fasteners.

4. Rail Polishing Work Plan:

   a. The Rail Polishing Work Plan shall include rail polishing locations, curve information, number of polishing passes required, polishing speed, RPMs of polishing stone, stone grit size and total work time required for each polishing segment. The Work Plan shall clearly demonstrate how the tallest roughness peaks caused by the polishing grinder will be at 50 mm ± 5mm wavelengths and not between 26 – 40 mm.

   b. Provide method to achieve and verify polishing tolerances.

   c. Polishing step shall use fine grit stones with grit size not less than 24.

5. Rail Grinding Production Report:

   a. Submit Rail Grinding Production Report at end of each shift documenting working crew, grinding locations, total grinding time for each track section, pre- and post-grinding profiles, stone size and stone grit size, grinding speed, pre- and post-grinding corrugation conditions, number of passes, and confirmation of grinding tolerances achieved.

6. Rail Polishing Production Report:

   a. Submit Rail Polishing Production Report at end of each shift documenting working crew, polishing locations, total time for each track section, pre- and post-polishing profiles, stone size, stone grit size, grinding speed, pre-

and post-polishing corrugation conditions, number of passes, and confirmation of grinding tolerances achieved.

7. System Post-Grinding Report:

a. Provide a post-grinding database report that documents and analyzes field data for those areas ground in the program. The database report shall be able to be integrated with the pre-grinding database. Include in the post-grinding report an inventory of what track was ground, the number of passes achieved, and total grinding times for each work zone. The report shall include rail roughness data demonstrating that the Grinding Acceptance Limit has been met at representative locations as agreed upon in the Work Plan. Provide data in Excel and Word format.

8. System Post-Polishing Report:

a. Provide a Post-Polishing Report that documents and analyzes field data for those areas polished in the program. The report shall be able to be integrated with the pre-grinding database. Include in the post-polishing report an inventory of what track was polished, the number of passes achieved, and total polishing times for each work zone. The report shall include rail roughness data demonstrating that the Grinding Acceptance Limit has been met at representative locations as agreed upon in the Work Plan. Provide data in Excel and Word format.

1.04 QUALITY ASSURANCE

A. Mock-Up (Demonstration Section):

1. To validate the Work Plan and demonstrate the Contractor's ability to deliver the rail grinding and polishing by constructing a demonstration section a minimum of two days prior to the scheduled beginning of grinding:

a. Utilize the exact procedure as specified in the Work Plan. Construct the demonstration section to the length of at least one complete production but not less than 500-feet. If the demonstration section does not meet the requirements, submit a revised Work Plan and construct another demonstration section or sections as required.

b. The finish of the Demonstration Section shall be measured for rail roughness using the Corrugation Analysis Trolley (CAT) and the results submitted for review and concurrence.

B. Grinding Tolerances:

1. Transverse Profile:

a. Maximum transverse profile tolerance shall be minus 0.5-millimeter to plus 1-millimeter (in relation to design profile).

2. Longitudinal Profile:

a. Maximum top of railhead longitudinal variation (corrugation) of 0.02 millimeters over 200 millimeters.

b. Finished Surface Roughness (Ra) shall not exceed 5 micrometers on the contact location between the wheel and the rail, otherwise known as the running band. Finished Surface Roughness (Ra) shall not exceed 10 micrometers at any point on the railhead.

c. Rail roughness in 1/3 octave bands over wavelengths of 5-millimeters to 600-millimeters shall not exceed the limits provided in Figure 1. Compliance with this requirement shall be verified over four sections, per mile of track, with a minimum length of 400-feet. The locations for the tests shall be specified by Sound Transit and be included in the System Post-Grinding Report.

d. The tallest rail roughness peak caused by the polishing grinder shall be at 50 mm ± 5mm wavelengths and not between 26 – 40 mm.

e. The limits in Figure 1 may be exceeded by a maximum of 3 decibels in no more than two (2) 1/3 octave bands over a combined length no more than 5-meters in any 100 meter section.

f. The roughness measurements shall be performed using a CAT at up to 6 points across the rail head from gage face to 60 millimeters from gage face. Location of CAT transducers to be determined by grinding mark locations and the contact band.

Figure 1: Rail Roughness - Grinding Acceptance Limit

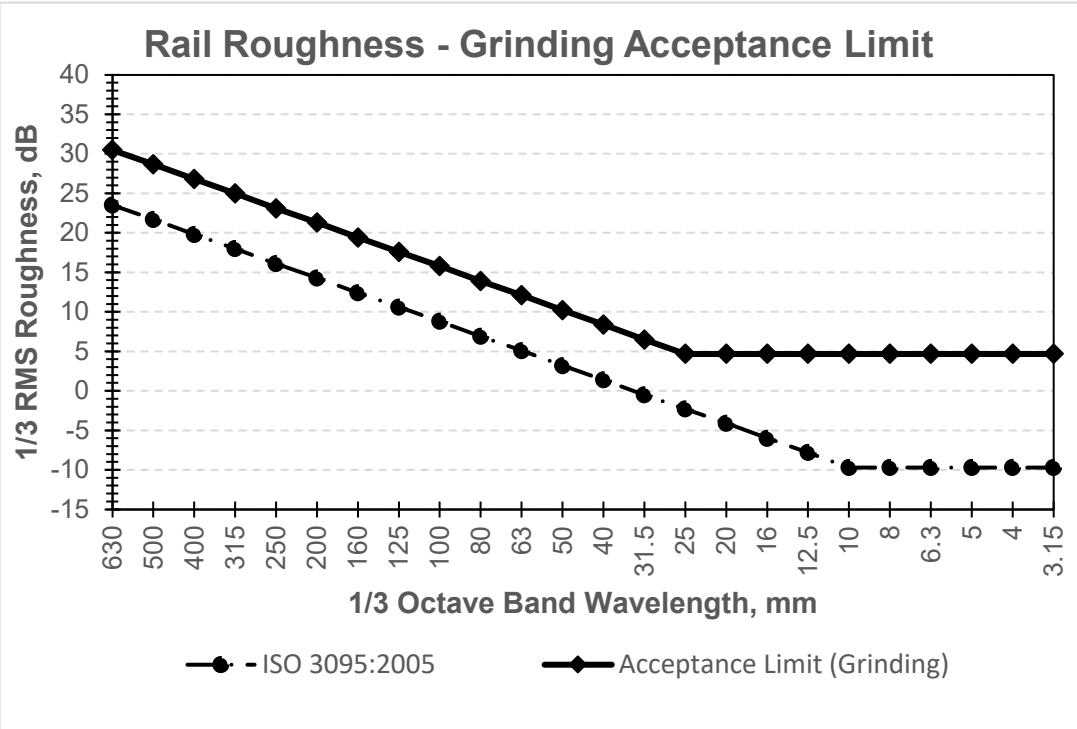

Table 1: Rail Roughness – Grinding Acceptance Limit

1/3 Octave Band Center Frequency, Hz	Roughness (decibel ref 1 µm)	Roughness (micrometer)
630	30.5	33.5
500	28.7	27.2
400	26.8	21.9
315	25.0	17.8
250	23.1	14.3
200	21.3	11.6
160	19.4	9.3
125	17.6	7.6
100	15.8	6.2
80	13.9	5.0
63	12.1	4.0
50	10.2	3.2
40	8.4	2.6
31.5	6.5	2.1
25	4.7	1.7
20	4.7	1.7
16	4.7	1.7
12.5	4.7	1.7
10	4.7	1.7
8	4.7	1.7
6.3	4.7	1.7
5	4.7	1.7
4	4.7	1.7
3.15	4.7	1.7

3. Visual Appearance:

   a. Where facets are produced by the grinding operation, the maximum facet width shall be 4-millimeters on the gauge corner, 7-millimeters on the shoulder and 10-millimeters within 10-millimeters of the rail crown.

   b. The grinding zone shall be blended smoothly into the parent rail.

   c. The maximum variation in facet width over a 100-millimeters length of rail shall be 25 percent of the maximum width of the facet.

   d. There shall not be continuous bluing in the grinding zone.

C. Polishing Tolerances:

1. Transverse Profile:

   a. Maximum transverse profile tolerance shall be minus 0.5-millimeter to plus 1-millimeter (in relation to design profile).

2. Longitudinal Profile:

   a. Maximum top of railhead longitudinal variation (corrugation) of 0.02 millimeters over 200 millimeters.

   b. Finished Surface Roughness (Ra) shall not exceed 5 micrometers on the contact location between the wheel and the rail, otherwise known as the

running band. Finished Surface Roughness (Ra) shall not exceed 10 micrometers at any point on the railhead.

c. Rail roughness in 1/3 octave bands over wavelengths of 5-millimeters to 600-millimeters shall not exceed the limits provided in Figure 2. Compliance with this requirement shall be verified over four sections, per mile of track, with a minimum length of 400-feet. The locations for the tests shall be specified by Sound Transit and be included in the System Post-Polishing Report.

d. The tallest rail roughness peak caused by the polishing grinder shall be at 50 mm ± 5mm wavelengths and not between 26 – 40 mm.

e. The limits in Figure 2 may be exceeded by a maximum of 3 decibels in no more than two (2) 1/3 octave bands over a combined length no more than 5-meters in any 100 meter section.

f. The roughness measurements shall be performed using a CAT at up to 6 points across the rail head from gage face to 60 millimeters from gage face. Location of CAT transducers to be determined by grinding mark locations and the contact band.

Figure 2: Rail Roughness - Polishing Acceptance Limit

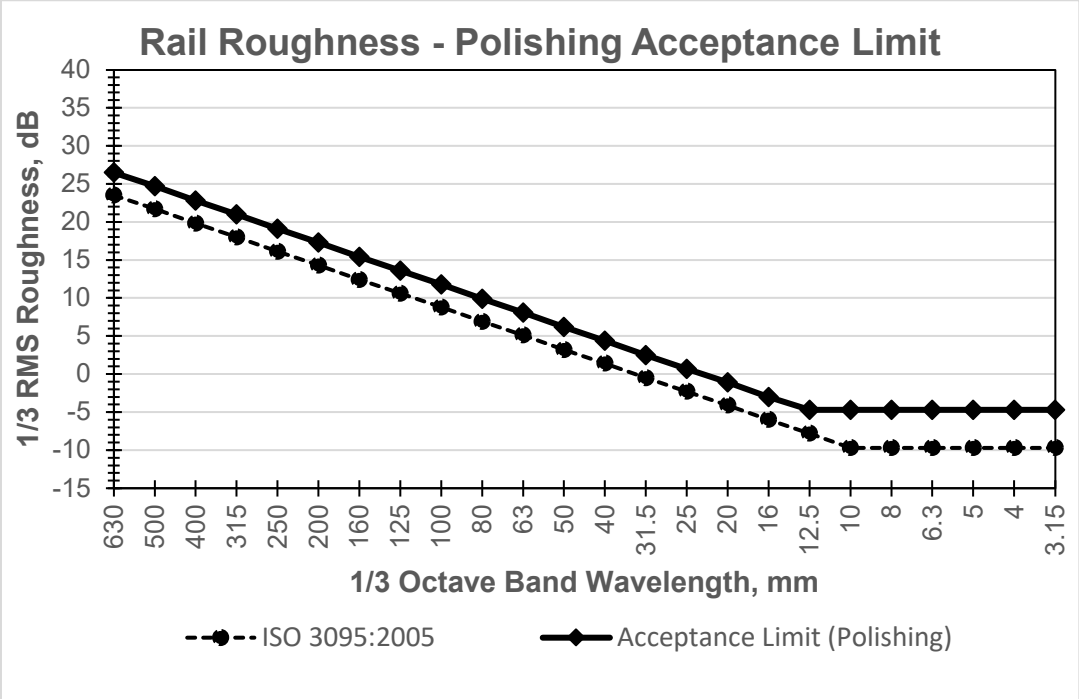

Table 2: Rail Roughness – Polishing Acceptance Limit

1/3 Octave Band Center Frequency, Hz	Roughness (decibel ref 1 µm)	Roughness (micrometer)
630	26.5	21.1
500	24.7	17.2
400	22.8	13.8
315	21	11.2
250	19.1	9.0
200	17.3	7.3
160	15.4	5.9
125	13.6	4.8
100	11.8	3.9
80	9.9	3.1
63	8.1	2.5
50	6.2	2.0
40	4.4	1.7
31.5	2.5	1.3
25	0.7	1.1
20	-1.1	0.9
16	-3	0.7
12.5	-4.7	0.6
10	-4.7	0.6
8	-4.7	0.6
6.3	-4.7	0.6
5	-4.7	0.6
4	-4.7	0.6
3.15	-4.7	0.6

3. Visual Appearance:

   a. Where facets are produced by the polishing operation, the maximum facet width shall be 4-millimeters on the gauge corner, 7-millimeters on the shoulder and 10-millimeters within 10-millimeters of the rail crown.

   b. The polishing zone shall be blended smoothly into the parent rail.

   c. The maximum variation in facet width over a 100-millimeters length of rail shall be 25 percent of the maximum width of the facet.

   d. There shall not be continuous bluing in the polishing zone.

PART 2 - PRODUCTS

2.01 CONSTRUCTION EQUIPMENT

A. Rail grinding and polishing equipment shall:

1. Traverse the track gauge, guard rail, flangeway width, curve radii, rail sections, and special trackwork components without causing damage to the rail, fasteners, track structure or trackwork. Damages shall be repaired by the Contractor at no additional cost to Sound Transit.

2. Clearance for the grinding equipment shall conform to the requirements for vehicles clearances, as specified in Sound Transit Design Criteria Manual, Chapter 4, Track Alignment and Vehicle Clearance.

3. Maximum axle load of 20 tons.

4. On board monitors to continuously measure rail profile and rail roughness and provide real time feedback to the operator.

5. Measure in length in metric units and angles in degrees.

6. Obtain rail cross sectional profile.

7. Measure corrugation depth and wavelength to an accuracy of 1.0 micrometers.

8. No fewer than 8 grinding motors and be capable of creating 8 unique facets on each rail, or the equivalent capability and alternate technology.

9. Equipment shall meet the dynamic envelope of Sound Transit's tunnels.

10. Minimum achievable grinding motor angles of minus 70 degrees gauge and plus 15 degrees field.

11. Able to grind through crossings, embedded track, and turnouts.

12. Dust-collection system capable of removing materials from the grinding operation.

13. On board fire suppression equipment to meet requirements for right-of-way protection during grinding operations.

14. Spark arrest shielding to confine grinding sparks under the frame. Protect all fire-sensitive track and tunnel components, such as rubber pads underneath and around the rails, from burning caused by grinding sparks.

15. Spark arrest shielding to confine grinding sparks under the frame.

16. On-board mobile radio equipment for communication with Link Control Center.

17. Pressurized cab to prevent smoke and dust from entering the operating compartment occupied by the operators and pilot.

B. Rail grinding equipment shall have the following controls or equivalent capabilities:

1. Computer-based grinding pattern control.

2. Automated motor positioning of grinding heads.

3. Fully adjustable and automated grinding head control to accommodate multiple grinding patterns.

4. Grinding pattern changes and adjustments achieved through an onboard central control system.

5. Capable of grinding a variety of profiles and re-occurring patterns depending on varying rail wear conditions.

6. Operator and/or computer-controlled grinding-head configuration adjustment to adjust profile in tangent-to-curve grinding situations.

7. Vertical stability control of grinding heads with ability to remove rail corrugation.

8. Grinding motor load control shall be manually selected and automatically maintained.

9. Grinding patterns shall not change with curve elevation or track gauge.

10. The unit shall be capable of grinding in tight clearance areas including road crossings, special trackwork, floating slabs, pedestrian crossing and tunnels causing no damage.

11. Ability to grind only those areas required.

12. Sequencing grinding head control capability to clear obstructions, including signals equipment to allow grinding through equipment without its removal.

C. Rail Grinding Equipment Operation:

1. Constant working speed to provide uniform grinding finish.

2. Ridges left by grinding facets shall not be so sharp as to result in the development of flow lines, spalling at edge of contact bands or induce wheel noise from a rail defect.

3. Able to stop and park on maximum 8 percent grade.

4. Able to work at a speed of not less than 3 miles per hour on maximum 8 percent grade.

5. Able to work in bi-directional operation.

6. Capable of travel speed up to 25 miles per hour.

7. Provisions for emergency coupling at either end of equipment to allow equipment removal in case of operational failure. Such as drawbar or pintle hitch. Lights for night rail travel and work, including all necessary safety and warning lights and sound devices.

8. Low noise level during grinding to allow night work in residential areas. The maximum noise level during grinding is 85 dBA at a distance of 50 feet from any portion of the grinding train.

PART 3 - EXECUTION

3.01 RAIL GRINDING

A. Reprofile grind and polish rail in accordance with the Work Plan and applicable requirement.

B. Grinding Profiles:

1. The following are the four grinding profiles required by this specification:

a. HRC: Profile is designed as single point conformal contact profile and shall be used on horizontal curves with radius less than 5,000-feet.

b. LOW: Profile is designed to promote field side rail contact and shall be used in conjunction with the High Rail Curve on the inside or low rail of a curve with radius less than 5,000-feet.

c. CPC: Tangent/large radius curve profile is designed to place the running band on the rail center for the purpose of spreading wear of the wheel and

shall be used on tangent track and horizontal curves with radius equal to and greater than 5,000-feet including the spiral.

d. CPF: Tangent/large radius curve profile is designed to place the running band on the rail center for the purpose of spreading wear of the wheel and shall be used on tangent track and horizontal curves with radius equal to and greater than 5,000-feet including the spiral.

e. Grinding profile transitions, changes from one profile to the next, shall be uniform change over the full length of the horizontal curve spirals.

3.02 FIELD QUALITY CONTROL

A. Rail grinding and polishing production report at end of each shift documenting working crew, grinding locations, total grinding time for each track section, pre- and post-grinding profiles, pre- and post-grinding corrugation conditions, number of passes, grinding and polishing stone grit sizes and confirmation of grinding tolerances achieved.

END OF SECTION

FIGURES (On Proceeding Pages)

1. Figure 3: HRC
2. Figure 4: LOW
3. Figure 5: CPC
4. Figure 6: CPF

FIGURE 3: HRC

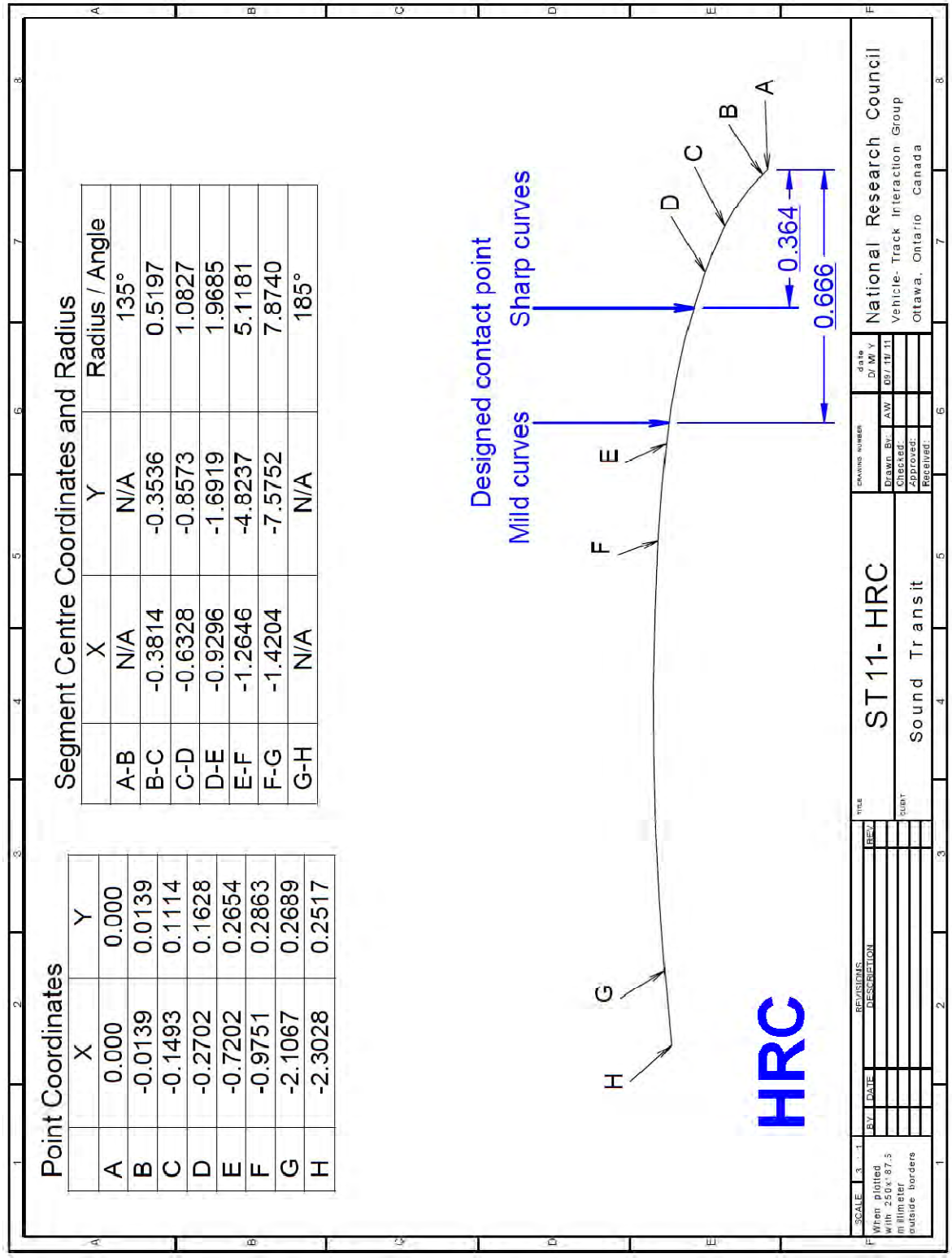
Point Coordinates
X Y
A 0.000 0.000
B -0.0139 0.0139
C -0.1493 0.1114
D -0.2702 0.1628
E -0.7202 0.2654
F -0.9751 0.2863
G -2.1067 0.2689
H -2.3028 0.2517
Segment Centre Coordinates and Radius
X Y Radius / Angle
A-B N/A N/A 135°
B-C -0.3814 -0.3536 0.5197
C-D -0.6328 -0.8573 1.0827
D-E -0.9296 -1.6919 1.9685
E-F -1.2646 -4.8237 5.1181
F-G -1.4204 -7.5752 7.8740
G-H N/A N/A 185°
Designed contact point
Mild curves
Sharp curves
0.364
0.666
A
B
C
D
E
F
G
H
HRC
ST11- HRC
Sound Transit
National Research Council
Vehicle- Track Interaction Group
Ottawa, Ontario Canada

FIGURE 4: LOW

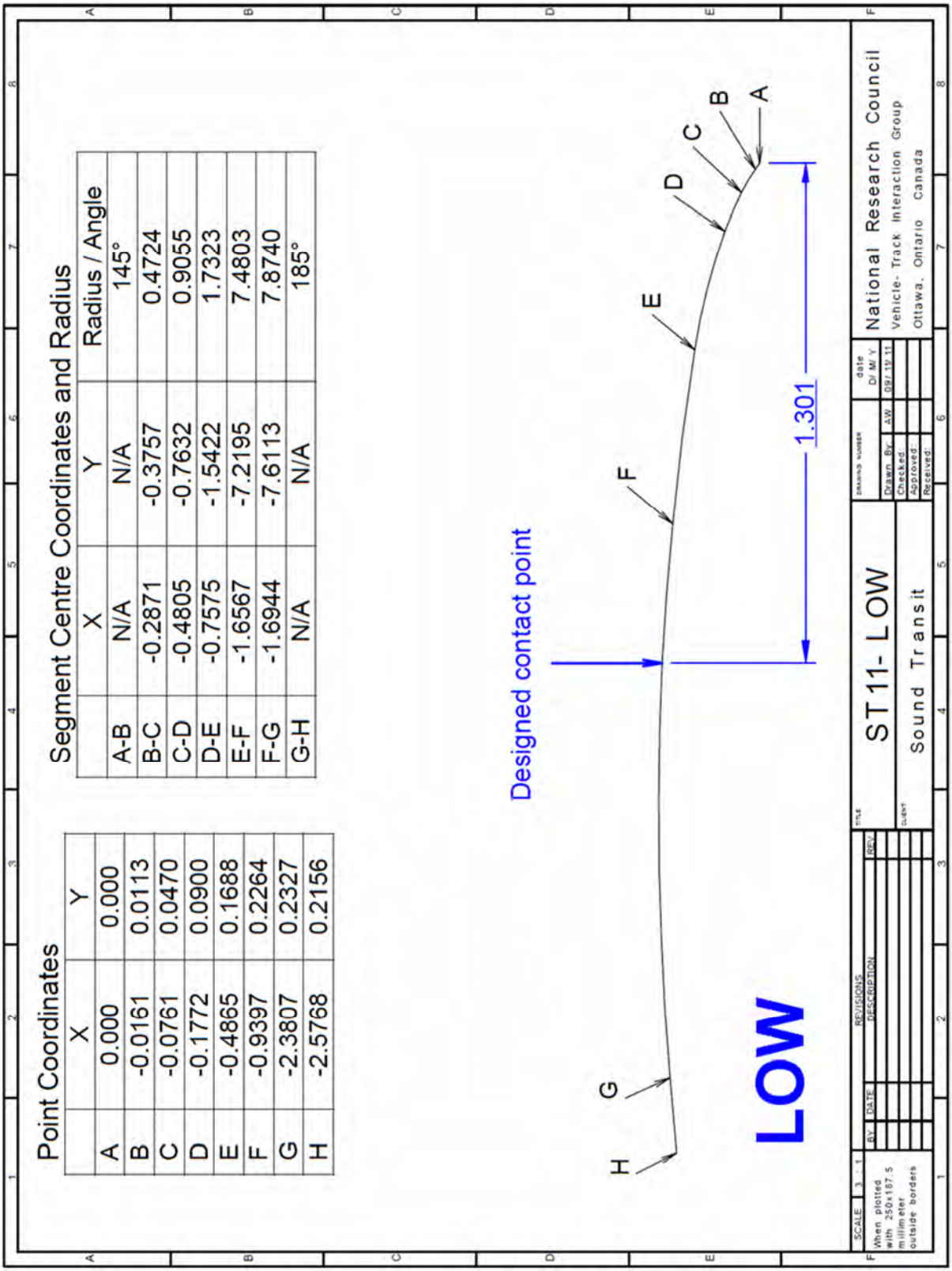
Point Coordinates
A 0.000 0.000
B -0.0161 0.0113
C -0.0761 0.0470
D -0.1772 0.0900
E -0.4865 0.1688
F -0.9397 0.2264
G -2.3807 0.2327
H -2.5768 0.2156
Segment Centre Coordinates and Radius
A-B N/A N/A 145°
B-C -0.2871 -0.3757 0.4724
C-D -0.4805 -0.7632 0.9055
D-E -0.7575 -1.5422 1.7323
E-F -1.6567 -7.2195 7.4803
F-G -1.6944 -7.6113 7.8740
G-H N/A N/A 185°
Designed contact point
1.301
A
B
C
D
E
F
G
H
LOW
ST 11- LOW
Sound Transit
National Research Council
Vehicle- Track Interaction Group
Ottawa, Ontario Canada

FIGURE 5: CPC

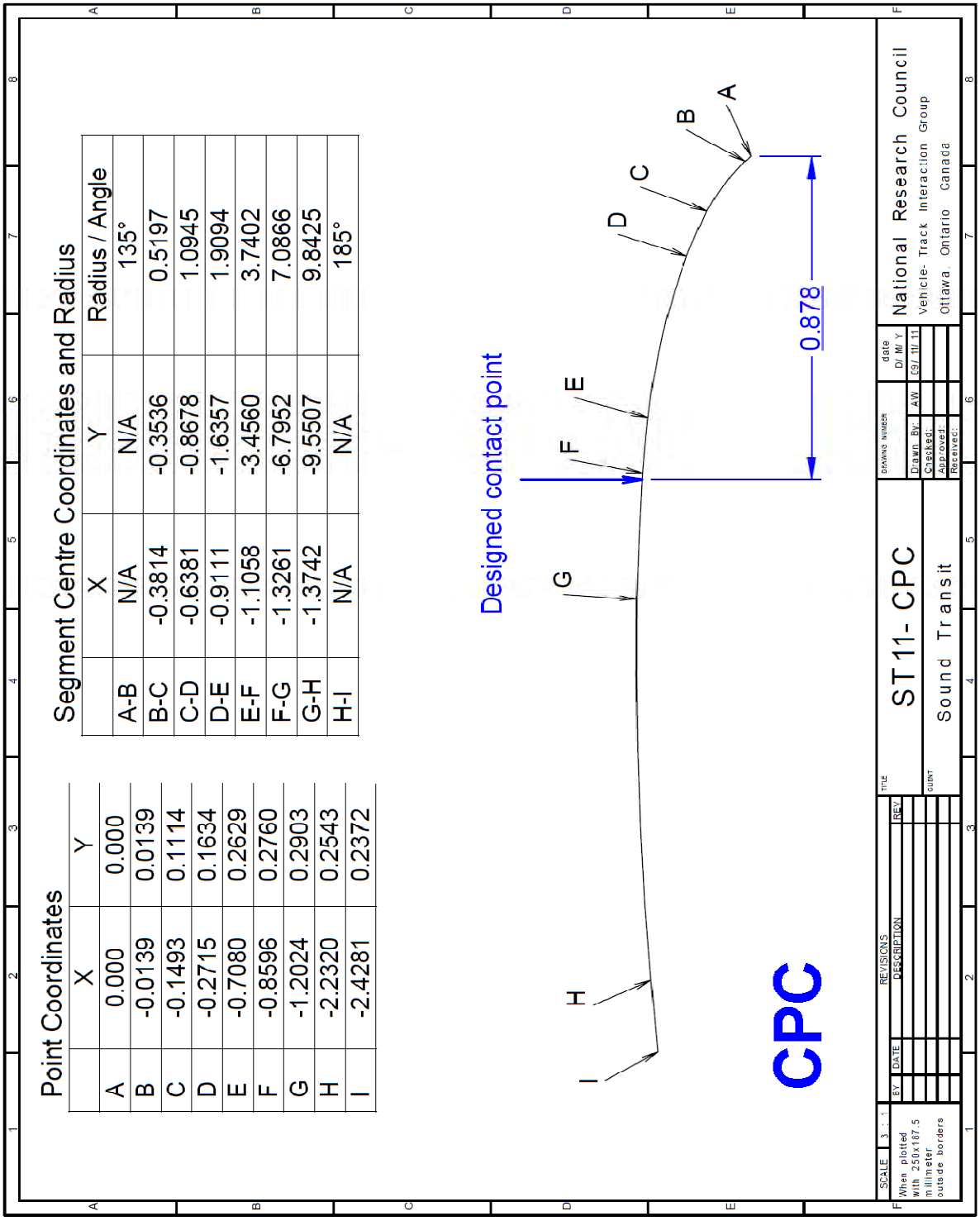
Point Coordinates
A 0.000 0.000
B -0.0139 0.0139
C -0.1493 0.1114
D -0.2715 0.1634
E -0.7080 0.2629
F -0.8596 0.2760
G -1.2024 0.2903
H -2.2320 0.2543
I -2.4281 0.2372
Segment Centre Coordinates and Radius
A-B N/A N/A 135°
B-C -0.3814 -0.3536 0.5197
C-D -0.6381 -0.8678 1.0945
D-E -0.9111 -1.6357 1.9094
E-F -1.1058 -3.4560 3.7402
F-G -1.3261 -6.7952 7.0866
G-H -1.3742 -9.5507 9.8425
H-I N/A N/A 185°
Designed contact point
A
B
C
D
E
F
G
H
I
0.878
CPC
SCALE 3 : 1
When plotted with 250x187.5 millimeter outside borders
REVISIONS
BY DATE DESCRIPTION REV
TITLE
ST11- CPC
Sound Transit
CLIENT
DRAWING NUMBER
Drawn By: AW
Checked:
Approved:
Received:
date D/ M/ Y
09/ 11/ 11
National Research Council
Vehicle- Track Interaction Group
Ottawa, Ontario Canada

FIGURE 6: CPC

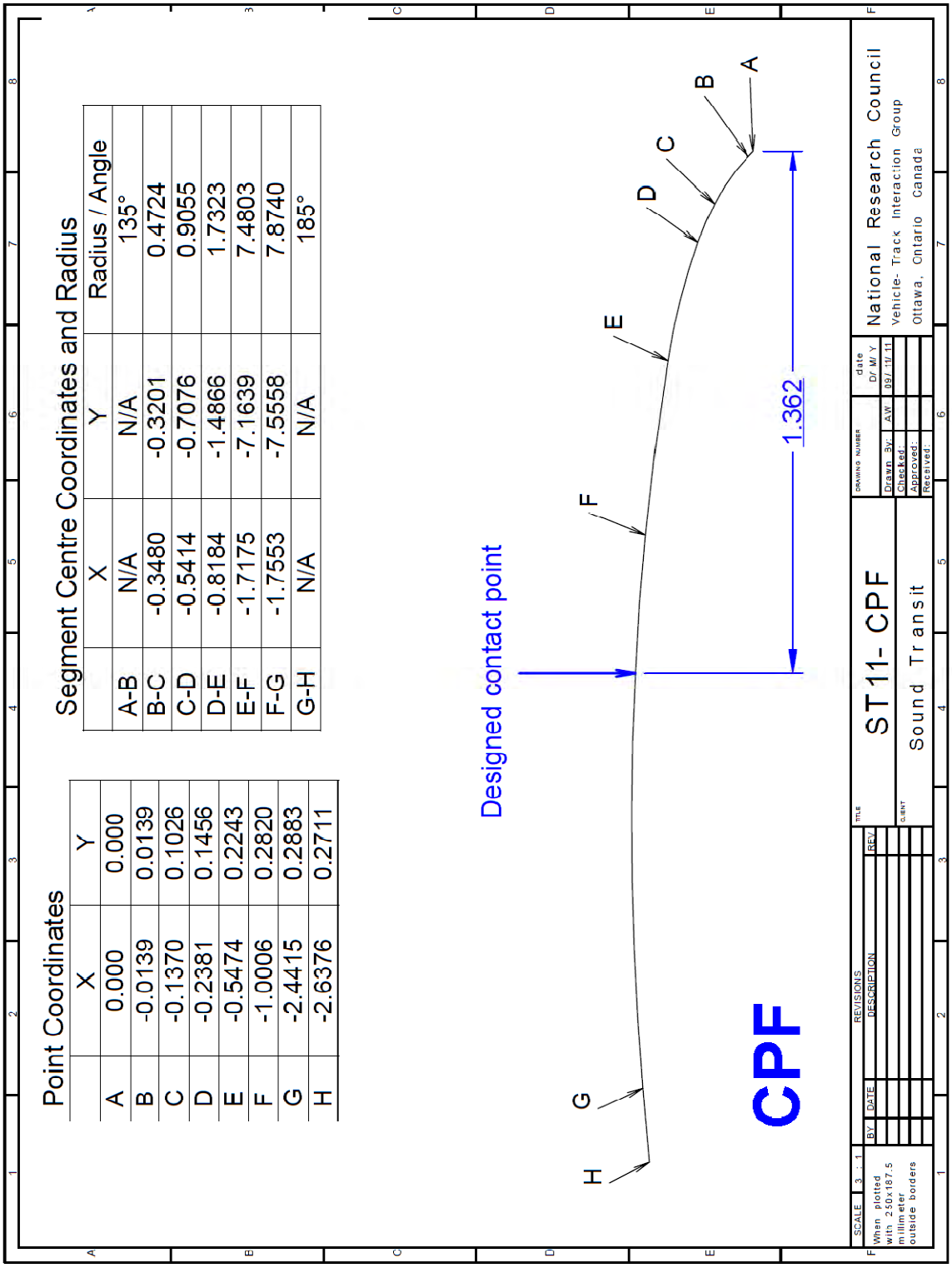

END OF FIGURES

SECTION 34 11 31

CONCRETE CROSS TIES AND FASTENERS

PART 1 - GENERAL

1.01 SUMMARY

A. Section includes:

1. Requirements for the design, manufacture, testing, delivering, handling and storing of monoblock prestressed concrete cross ties, guard rail ties, and switch ties, including insulated rail fastening components and base pads.

1.02 REFERENCES

A. This Section incorporates by reference the latest revisions of the following documents:

1. ASTM International (ASTM):

a. ASTM F3125/F3125M Standard Specification for High Strength Structural Bolts, Steel and Alloy Steel, Heat Treated, 120 ksi (830 MPa) and 150 ksi (1040 MPa) Minimum Tensile Strength, Inch and Metric Dimensions.

b. ASTM A416/A416M Standard Specification for Low-Relaxation Seven-Wire Steel Strand for Prestressed Concrete.

c. ASTM A536 Standard Specification for Ductile Iron Castings.

d. ASTM A881/A881M Standard Specification for Steel Wire, Indented, Low-Relaxation for Prestressed Concrete.

e. ASTM A886/A886M Standard Specification for Steel Strand, Indented, Seven-Wire Stress-Relieved for Prestressed Concrete.

f. ASTM C31/C31M Standard Practice for Making and Curing Concrete Test Specimens in the Field.

g. ASTM C33/C33M Standard Specification for Concrete Aggregates.

h. ASTM C39/C39M Standard Test Method for Compressive Strength of Cylindrical Concrete Specimens.

i. ASTM C78/C78M Standard Test Method for Flexural Strength of Concrete (Using Simple Beam with Third-Point Loading).

j. ASTM C109/C109M Standard Test Method for Compressive Strength of Hydraulic Cement Mortars (Using 2-in. or [50-mm] Cube Specimens).

k. ASTM C114 Standard Test Methods for Chemical Analysis of Hydraulic Cement.

l. ASTM C143/C143M Standard Test Method for Slump of Hydraulic-Cement Concrete.

m. ASTM C150/C150M Standard Specification for Portland Cement.

n. ASTM C172/C172M Standard Practice for Sampling Freshly Mixed Concrete.

o. ASTM C191 Standard Test Methods for Time of Setting of Hydraulic Cement by Vicat Needle.

p. ASTM C204 Standard Test Methods for Fineness of Hydraulic Cement by Air-Permeability Apparatus.

q. ASTM C231/C231M Standard Test Method for Air Content of Freshly Mixed Concrete by the Pressure Method.

r. ASTM C260/C260M Standard Specification for Air-Entraining Admixtures for Concrete.

s. ASTM C295/C295M Standard Guide for Petrographic Examination of Aggregates for Concrete.

t. ASTM C359 Standard Test Method for Early Stiffening of Hydraulic Cement (Mortar Method).

u. ASTM C430 Standard Test Method for Fineness of Hydraulic Cement by the 45-microm (No. 325) Sieve.

v. ASTM C494/C494M Standard Specification for Chemical Admixtures for Concrete.

w. ASTM C496/C496M Standard Test Method for Splitting Tensile Strength of Cylindrical Concrete Specimens.

x. ASTM C586 Standard Test Method for Potential Alkali Reactivity of Carbonate Rocks for Concrete Aggregates (Rock Cylinder Method).

y. ASTM C618 Standard Specification for Coal Fly Ash and Raw or Calcined Natural Pozzolan for Use in Concrete.

z. ASTM C1105 Standard Test Method for Length Change of Concrete Due to Alkali-Carbonate Rock Reaction.

aa. ASTM C1260 Standard Test Method for Potential Alkali Reactivity of Aggregates (Mortar Bar Method).

bb. ASTM C1293 Determination of Length Change of Concrete Due to Alkali-Silica Reaction.

cc. ASTM C1567 Standard Test Method for Determining the Potential Alkali-Silica Reactivity of Combinations of Cementitious Materials and Aggregate (Accelerated Mortar-Bar Method).

dd. ASTM C1602/C1602M Standard Specification for Mixing Water Used in the Production of Hydraulic Cement Concrete.

ee. ASTM D257 Standard Test Methods for DC Resistance or Conductance of Insulating Materials.

ff. ASTM D395 Standard Test Methods for Rubber Property-Compression Set.

gg. ASTM D412 Standard Test Methods for Vulcanized Rubber and Thermoplastic Elastomers – Tension.

hh. ASTM D471 Standard Test Method for Rubber Property - Effect of Liquids.

ii. ASTM D570 Standard Test Method for Water Absorption of Plastics.

jj. ASTM D573 Standard Test Method for Rubber-Deterioration in an Air Oven.

kk. ASTM D732 Standard Test Method for Shear Strength of Plastics by Punch Tool.

ll. ASTM D1149 Standard Test Methods for Rubber Deterioration – Cracking in an Ozone Controlled Environment.

mm. ASTM D1229 Standard Test Method for Rubber Property - Compression Set at Low Temperatures.

nn. ASTM D2240 Standard Test Method for Rubber Property - Durometer Hardness.

oo. ASTM D2440 Standard Test Method for Oxidation Stability of Mineral Insulating Oil.

pp. ASTM E122 Standard Practice for Calculating Sample Size to Estimate, with Specified Precision, the Average for a Characteristic of a Lot or Process.

2. American Association of State Highway and Transportation Official (AASHTO):

a. AASHTO T 26 Standard Method of Test for Quality of Water to be Used in Concrete.

3. American Concrete Institute (ACI):

a. ACI 301 Specifications for Structural Concrete.

b. ACI 305 Specification for Hot Weather Concreting.

4. American Railway Engineering and Maintenance-of-Way Association (AREMA):

a. AREMA Manual for Railway Engineering (AREMA Manual).

5. The Society for Protective Coatings (SSPC):

a. SSPC SP5 White Metal Blast Cleaning.

1.03 SUBMITTALS

A. Submit:

1. Technical Data: Submit Technical Data for each type of cross tie before the start of fabrication work. Include shop drawings of each cross tie and all information necessary for fabrication:

a. Include the dimensions, details, tolerances, materials, finishes, prestressing steel, embedded items, and fastening system components.

b. Prepare shop drawings including design calculations and other.

c. Include the procedures for installation and replacement of the fastener components.

2. Certificate of Experience: Transmit certification that the Manufacture of concrete cross ties has minimum of five years' experience in long-line concrete cross tie production.

3. Supplier's plant-specific Quality Systems Manual (QSM)

4. Supplier's Tie Repair Procedures. Repair procedures shall provide detailed criteria for size, type, material and cure.

5. Production test records and other required documentation for review during the in-plant inspection and submit prior to shipment of the ties.

B. Transmit:

1. Plan for Transporting, Handling, and Placing:

a. Plan for the method of handling, shipping, unloading, and stacking of concrete cross ties.

b. Concrete cross tie marking scheme for identification of ties.

2. All certified test reports and certificates of compliance.

3. Qualifications of Independent Testing Laboratories.

1.04 QUALITY ASSURANCE

A. The precast concrete tie plant shall be certified under the PCI Plant Certification Program. Certification shall be in the following product group and category:

1. Group C – Commercial Products:

a. C2- Prestressed Hollow-Core and Repetitive Products.

B. Provide a PCI approved plant-specific Quality Systems Manual defining methods, procedures, and processes to ensure compliance with standards of quality. The QSM shall provide detailed surface inspection procedures and acceptance criteria for maximum tolerance for all defects.

C. Tolerances:

1. Manufacturing tolerances:

a. For concrete ties finish dimensions shall be plus or minus 1/4-inch on length, width, depth and chamfer.

b. For concrete tie and fasteners track gauge shall be plus or minus 1/16–inch, exclusive of mill tolerance in rail.

c. For concrete ties centerline of the tie shall be within 1/2-inch of the centerline of the track gauge.

2. Rail Cant: 1 in 40, plus or minus 5, towards the centerline of the tie, except where shown otherwise in the contract documents.

3. Rail Seat Plane: Flat smooth surface within plus or minus 1/32-inch.

4. Differential Tilt of Rail Seats: The differential tilt in the direction parallel to the rail of one rail seat to the other shall not exceed 1/16-inch over a width of 6-inches.

5. Protrusion of Pre-tensioning Tendons: 1/8-inch maximum beyond the ends of the ties.

6. Concrete Cover for Prestressing Tendons, Ducts, and Prestressing End Fittings:

   a. 3/4-inch minimum cover, measure cover from outside of embedded items to surface of concrete.

7. Manufacturing tolerances for clear concrete protection (cover) and depth of prestressing tendons:

   a. Plus 1/8-inch for any two (2) rows of tendons.

   b. Plus 3/16-inch for the third row.

8. Rail Clip Toe Loads: The tolerances of the ties, shoulders, rail clips, insulators, and rail seat pads shall be small enough to prevent excessive variations in the rail clip toe loads. Tolerances that affect the rail clip toe loads shall be approved by the rail clip Supplier.

D. Strength Tests of Concrete:

1. Compressive and Flexural Strength tests shall be made to check the adequacy of the mix proportions and as a basis for acceptance. Samples for compressive test specimens shall be secured in accordance with ASTM C172/C172M. Samples for flexural tests specimens shall be secured and specimens shall be made and laboratory cured in accordance with ASTM C31/C31M. Specimens made to check the adequacy of curing and protection of concrete shall be cured entirely under production conditions:

   a. Compressive Strength tests shall be made on 4-inch by 8-inch cylinders in accordance with ASTM C39/C39M. For each day of production at least six (6) cylinders shall be prepared: two (2) for 28 day testing, and two (2) for checking strength at transfer, and two (2) spares.

   b. Modulus of Rupture shall be determined by flexural strength tests made on 6-inch by 6-inch by 20-inch beams in accordance with ASTM C78 or by Tensile Splitting tests on 4-inch by 8-inch concrete cylinders in accordance with ASTM C496/C496M. For each day of production at least two (2) beams or two (2) cylinders shall be prepared: one (1) for checking strength at 28 days, and one (1) for spares. Minimum flexural strength (modulus of rupture) at 28 days shall be 750 pounds per square inch.

1.05 DELIVERY, STORAGE, AND HANDLING

A. Delivery: Ties with threaded plastic caps or plugs securely installed in threaded insulated inserts. Securely brace ties for transportation to prevent movement that could cause damage. Stack ties in a horizontal position, braced with wooden spacer blocks so that the top surface or cast-in-place hardware does not contact ties loaded above. Do not load ties higher than the top of the cars nor more than six layers deep.

B. Do not drop or skid ties. Package other parts to prevent damage during shipment and to facilitate handling. Do not mix different parts in the same package.

PART 2 - PRODUCTS

2.01 PERFORMANCE/DESIGN REQUIREMENTS

A. Concrete Tie Design Requirements:

1. Design: Contractor shall prepare the final design of the concrete ties in accordance with AREMA Manual Volume 1, Chapter 30, Part 4.

2. Track Configuration:

a. Standard concrete cross ties shall be designed for use in standard ballasted track with 115RE rail and 4-feet and 8-1/2-inch gauge.

b. Concrete ties with emergency guard rail shall be designed for use in ballasted track with 115RE running rail and emergency guard rail, 4-feet and 8-1/2-inch track gauge, and an offset from running rail gauge point to emergency guard rail of 11-1/8-inches.

3. Operating Conditions:

a. Multiple unit electrically propelled trains of up to four (4) cars shall operate at speeds of up to 55 miles per hour on these ties. The design axle load shall be 27,700 pounds subject to a 30 percent impact factor. Approximate annual vehicle trips shall be 356,000.

b. The compaction of ballast under and around the tie shall be done by using hydraulic or electric activated tamping tools on a production ballast tamper. The cross tie shall resist these tamping forces without spalling of concrete on the sides and bottom corners.

4. Environmental Conditions: Environmental conditions shall be those of the Puget Sound region including an ambient temperature range of 30 degrees Fahrenheit to 75 degrees Fahrenheit, with an extreme range from 0 degrees Fahrenheit to 105 degrees Fahrenheit and an average annual rainfall of 42-inches.

5. Design Criteria: Concrete cross ties shall be as shown on the Contract Documents and shall meet the following requirements:

a. Concrete cross ties consist of the following components:

1) Concrete tie complete with embedded rail fastening shoulders.

2) Insulating elastomeric rail base pads.

3) Spring rail clips and spring clip insulators.

b. Design strength and electrical isolation requirements:

1) Concrete compressive strength shall be 7,000 pounds per square inch at 28 days.

2) Concrete cross tie designs shall be subject to acceptance testing to confirm minimum strength and electrical insulation requirements.

c. Protrusions: Do not use sharp angles or protrusions that are easily damaged by handling or tamping.

6. Rail Hold-Down Components:

   a. Rail hold-down assemblies shall be designed for use with 115 RE rail.

   b. Rail hold-down assemblies shall be comprised of as few components as economically and technically feasible for ease of assembly, disassembly, and maintenance. The rail clips, rail seat pads, embedded shoulders, and insulators shall be furnished by the rail clip Supplier.

   c. Design of the ties shall allow the rail clips to be installed and replaced in the field by one worker using hand tools. The clips and fasteners shall be a threadless design.

   d. Cross ties shall have, on both sides of the rail base, a positive means of preventing more than 1/8-inch total lateral movement of the rail base relative to the fastener in case of failure or loosening of one or both rail clips. The positive means of restraint shall extend at least 3/8–inch, but not higher than 1-3/4-inches above the base of rail in the installed position.

   e. Construct fastenings so that when the rail clips are removed, the rail can be lifted vertically until it is completely free of the fastening shoulder without disturbing the horizontal or vertical alignment of the shoulder or the adjacent restraining rail bracket.

7. Rail Seat Pads:

   a. Provide rail seat pads compatible with the rail fastening system with a shape that provides positive means of preventing movement of the pad parallel to the rail. Use elastomer pads with a thickness of at least 3/16-inch and not more than 7/16-inch, a width identical to the distance between the shoulder faces on the rail seat (plus 0-inch, minus 1/16-inch) and a length 1-inch longer than the rail seat bearing area (plus or minus 1/16-inch). Mark pads in a permanent manner to indicate Supplier, month and year manufactured, and designation.

8. Rail Clips:

   a. The rail clip shall be threadless, one-piece elastic, heat treated, alloy spring steel. One identical clip shall be used on the field and gauge side of the rail at the rail seat.

   b. The clips shall be reusable after removal through repeated applications without effect on the operating performance of the system.

   c. No part of the clip shall protrude below the tie surface or into the tie.

   d. The clip shall not have point contact. The clip shall be such that lateral rail movements within the confines of the shoulders will not produce transverse denting, carving, or scoring of the rail base. The clip shall be such that longitudinal rail slippage will not produce overstressing, bending, twisting, or other damage to the clips, and will not damage the rail.

   e. Rail clips and insulators used on rail insulated joint bars need not to be identical in design to those used on a standard rail. The clips shall clear the joint bar, shall have similar performance characteristics, shall be made by the same Supplier, and shall be installed into identical shoulders as the standard rail clip.

9. Insulators Between Fastener Hardware and Rails:

   a. Provide keys between the insulators and the fastener hardware to prevent relative motion in any direction.

   b. The insulators shall cover the full widths of the shoulders.

   c. Except for surfaces in contact with the rail, the surfaces of the insulators shall be smooth, clearly finished and free of flash. Insulators shall be free of internal defects and cavities.

10. Rail Fastening Shoulders:

   a. Shoulders shall be threadless and shall be designed to provide and maintain proper position and alignment of the rail clip, insulator, rail seat pad, and rail base.

   b. The shoulder shall not be directly anchored to the pretensioned steel.

   c. The shoulder shall be ragged stem design to maximize the surface area and pull out resistance.

B. Concrete Mix design:

1. Trial mixtures using aggregates, water, cement, and admixtures proposed for the manufacture of the concrete ties shall be made using at least three different water-cement ratios, which will produce a range of strengths. For each water-cement ratio, at least three (3) specimens for each day of production shall be made, cured, and tested. Each batch of concrete shall be mixed separately in a pan mixer.

2. Design compressive strength at the time proposed for transfer of prestress forces to the concrete shall be no less than 4,500 pounds per square inch, or higher if so required by the tie design or manufacturing method. Design compressive strength at 28 days shall be not less than 7,000 pounds per square inch. Design flexural strength at 28 days shall be not less than 750 pounds per square inch.

3. Aggregates and cement shall be measured by weight. The weight of aggregate shall be based on the saturated surface dry condition corrected for free moisture. Water shall be measured by weight or volume and admixtures shall be measured by volume, unless otherwise directed by the admixture Supplier.

4. Mix proportions shall be developed using the method of ACI 301, Section 3.9.

5. Restriction on mix design proportions:

   a. The cement content shall be not less than 600 pounds per cubic yard.

   b. The water-cement ratio shall not exceed 0.40 by weight. Water content shall be kept to the minimum consistent with strength requirements and placement needs.

   c. Air content in the plastic concrete shall have a minimum 3.5 percent air entrainment in the hardened concrete.

6. The proportions of aggregate to cement shall be such to produce a mixture that will work readily into corners and angles of the form and around the prestressing elements with the assistance of specified vibration, but without permitting the materials to segregate or excess of free water to collect on the surface.

7. The strength tests shall be made at:

a. The age at which transfer of prestress forces shall be made, and

b. 28 days, a curve shall be developed for each mix design showing the relationship between water-cement ratio and compressive strength.

8. Acceptance of trial mix: The maximum permissible water-cement ratio for the concrete mix to be used shall be that shown by the water-cement ratio versus strength curve to produce average strengths of 110 percent.

2.02 MATERIALS

A. Concrete Ties:

1. Cement:

a. Cement shall conform to ASTM C150/C150M, Type II or III low alkali (less than 0.60 percent). The false set penetration, when tested in accordance with ASTM C359, shall not be less than 45-millimeters initially, 35-millimeters at intermediate times, and 40-millimeters after remix.

b. Separate random samples of cement shall be taken each day of production to represent the cement used on each bed. Each sample shall not be less than 1 pound and shall be clearly identified with the date and bed number. Each sample shall be kept in airtight containers until the corresponding 28-day cylinder tests have been carried out and results.

c. Not more than two (2) sources of clinker or ground cement shall be used during any one month. Cement from each source shall be clearly identified and stored in separate weathertight silos. If two sources of cement are used on one bed, the tests shall be performed on the first batch of concrete made with each cement and thereafter as required. Strength tests shall also be conducted on concrete made with each type of cement.

d. Cement mill certificates shall be provided monthly by each Supplier and shall continue the results of the following tests on cement delivered during that month:

1) Fineness by air permeability (ASTM C204).

2) False Set (ASTM C359) - Penetration at three (3), five (5), eight (8), eleven (11) minutes and after remix.

3) Setting Time (ASTM C191).

4) Compressive Strength (ASTM C109/C109M) at 1 day, 3 days, and 7 days.

5) Chemical Analysis (ASTM C114) - Including SiO_2, Al_2O_3, Fe_2O_3, CaO, MgO, SO_3, K_2O, Na_2O, and calculated alkalis as Na_2O equivalent, C_3S, C_2S, C_3A, C_4AF.

6) Residue on 325 mesh sieve (ASTM C430).

e. At least once during every six (6) months, a randomly chosen sample of cement from each source used shall be analyzed for alkali content in accordance with ASTM C114 by an Independent Testing Laboratory.

2. Fine and Coarse Aggregates: Provide aggregates free from deleterious substances and conforming to the requirements of the AREMA Manual, Volume 2, Chapter 8, Part 1, except as defined or modified herein:

   a. Aggregates shall be natural aggregates complying with ASTM C33/C33M Class 4S.

   b. The Supplier shall provide evidence that concrete containing aggregate from the proposed source with cement content and alkali burden similar to the job mix, has a satisfactory service history of at least five (5) years. This evidence shall include structures requiring a Class 4S aggregate.

   c. The maximum size of aggregate shall be 3/4-inch. If the coarse or fine aggregate is supplied in more than one (1) size, each size shall be stored separately.

   d. Washed aggregate shall be allowed to drain, in stockpiles, before use. All aggregates shall be free from ice when used.

   e. In addition to the requirements of ASTM C33/C33M, the following tests shall be conducted by an Independent Testing Laboratory:

      1) Petrographic examination to ASTM C295/C295M. This shall be conducted on each new source.

      2) Evaluation of potential alkali reactivity shall be made according to:

         a) ASTM C1260 – Standard Test Method for Potential Alkai Reactivity of Aggregates (Mortar Bar Method) or ASTM C1567 Standard Test Method for Determining the Potential Alkali-Silica Reactivity of Combinations of Cementitious Materials and Aggregate (Accelerated Mortar-Bar Method).

         b) ASTM C1293 – Determination of Length Change of Concrete Due to Alkali-Silica Reaction.

      3) Evaluation of potential alkali carbonate reactivity. Aggregates containing carbonate shall be tested in accordance with ASTM C586 and ASTM C1105.

3. Mixing Water: Water shall be potable and free from harmful amounts of oils, acids, alkalis, salts, organic materials, or other substances that can be deleterious to concrete or steel. Mixing water, including that portion of the mixing water contributed in the form of free moisture on aggregates, shall have a chloride ion content of less than 100 parts per million. When required, test mixing water in accordance with AASHTO T 26.

4. Admixtures, if used:

   a. Air-Entraining Admixtures: Provide admixtures conforming to the requirements of ASTM C260/C260M.

   b. Accelerating, Retarding, and Water-Reducing Agents: Provide agents conforming to the requirements of ASTM C494/C494M.

   c. Other Pozzolanic Admixtures: Provide admixtures conforming to the requirements of ASTM C618.

d. Do not use admixtures containing chlorides, fluorides, sulphites, nitrates, or aluminum powder.

5. Prestressing Tendons:

a. Prestressing tendons shall be pretensioned and of one of the following types:

1) Wire for tendons in prestressed concrete in accordance with ASTM A881/A881M.

2) Strand for tendons in prestressed concrete in accordance with ASTM A416/A416M, ASTM A886/A886M or equal.

b. Do not use tendons larger than 7/16-inch diameter.

B. Embedded Components:

1. Rail Fastening Shoulders:

a. Supplier shall utilize ductile iron shoulders conforming to ASTM A536 Grade 60-40-18 or 65-45-12. Shoulders shall be marked, on non-bearing surfaces above the concrete level, with the part number, Supplier's identification and pattern number:

1) Shoulders shall be free from burned-on sand, cracks, cavities, injurious blow holes and other defects. Fins shall be removed from the vertical faces of the head of each shoulder. Fins across the top of the head shall not exceed 1/32-inch and below the head, fins shall not exceed 1/16-inch. At gates, there shall be no cavity in the shoulder more than 1/8-inch below the general surface level.

2) Go and No-Go inspection gages shall be used to check that tolerances conform. A sampling plan for Acceptable Quality Levels of 1 percent for major dimensions and 4 percent for minor dimensions shall be used (see ASTM E122). The Supplier shall decide which dimensions are major and which are minor. These shall be indicated on the shop drawings.

b. Shoulders shall be free of mud, oil, loose rust, and other contamination when cast into ties. Shoulders shall be rigidly secured in the forms during casting and not move within the concrete when the securing device is released. Location within the ties shall comply with the Contract Drawings:

1) The shoulder shall not be directly anchored to the pretensioned steel. The shoulder shall not come in contact with pretensioned steel.

2. Embedded Anchor Inserts:

a. Anchor inserts shall conform to ASTM F3125 and have a Class 2B thread fit:

1) As part of the insert, there shall be a feature to prevent rotation of the insert after the concrete has reached its design strength. The anchor insert shall have a minimum length of 4-inches and a maximum length of 6.5-inches and shall have a minimum 3-inch engaging threaded length.

2) In the installed position, the top of the anchor insert shall provide a flat surface parallel to the rail base with a minimum of 1/8-inch bearing width surrounding the anchor bolt hole.

3) Inserts shall be furnished with an installed plug of metal or plastic material to preclude the entrapment of moisture, concrete, or other foreign materials. Removal shall be by using a socket or other common device. Plugs shall be capable of reinsertion, and if reinserted, shall still exclude concrete and other materials from entry.

b. Anchor inserts, if steel, shall be electrically insulated using an epoxy resin coating or a replaceable threaded polymer core:

1) Epoxy coated inserts shall have a uniform epoxy resin insulating coating on exterior surfaces:

a) Coating material shall be 100 percent dry powder epoxy resin such as Scotch Kote Brand Protective Resin No. 203, manufactured by the Minnesota Mining and Manufacturing Company, Corvel Epoxy ECB-1363A, manufactured by the Polymer Corporation, or approved equivalent.

b) The coating application shall be in accordance with the coating Supplier's recommendations, or an approved equivalent.

c) Before coating, the insert shall be degreased and cleaned to white metal in accordance with SSPC SP5.

d) The epoxy coating shall not be thinner than 10 mils or thicker than 20 mils. Epoxy coating having runs, sags, or chips will not be accepted. Thickness shall be tested by a magnetic mil gauge at not less than two areas of the insert.

e) When tested in accordance with ASTM D2440, epoxy coatings shall have a hardness of not less than 85 or more than 80 Shore D.

f) The coated insert shall be tested for pinholes and breaks in a weak electrolytic solution. A 100 volt DC electrical current shall be applied between the electrolyte and the insert; the coating will be acceptable if the circuit is not closed when the insert is immersed in the electrolytic solution. The above tests shall be performed by the epoxy coating applicator. The frequency of testing shall be in accordance with a sequential statistical quality control plan developed by the epoxy coating applicator. The plan shall ensure that the average defective rate shall not exceed 2 percent and that the maximum defective rate shall not exceed 5 percent. These defect rates shall be demonstrated at a 90 percent degree of confidence.

2) Anchors with replaceable polymer cores shall be the PIM style as manufactured by CXT or an approved equal.

C. Rail Fastening Components:

1. Rail Fastening Spring Clips:

a. For standard and restraining rail concrete ties the rail fastening system shall be Pandrol FASTCLIP, or approved equal.

b. Rail clips shall not be dependent on elastomeric components in torsion.

c. One (1) identical clip design shall be used on the field and gauge side of the rail at the rail seat.

2. Insulators between fastening shoulder and rails:

a. Volume Resistivity: 1012 ohm-cm, minimum. Measure in accordance with ASTM D257.

b. Water Absorption at Saturation: 3 percent, maximum. Measure in accordance with ASTM D570.

c. Dry Shear Strength: 6500 pounds per square inch, minimum. Measure in accordance with ASTM D732.

d. Deformation Under Load: 5 percent, maximum. Measure at 2000 pounds per square inch and 122 degrees Fahrenheit in accordance with ASTM D621.

e. Heat Aging: Age for 10 days at 158 degrees Fahrenheit using ASTM D573 as a guide. Compare properties before and after aging at 158 degrees Fahrenheit. The tensile strength shall not decrease more than 10 percent. The Rockwell Hardness shall not change more than five (5) points. There shall be no warping, cracking, discoloration, or exudation of plasticizer.

f. Weatherometer Test: After 1,000 hours with cycled water spray, the yield stress shall be a minimum of 8,000 pounds per square inch and the tensile strength shall be a minimum of 6,000 pounds per square inch.

3. Rail Seat Pads:

a. Rail seat pads shall conform to AREMA Manual Volume 1, Chapter 30, Part 4.

b. Rail seat pads shall be manufactured from natural rubber or thermoplastics.

2.03 FABRICATION

A. General:

1. Design dimensions and manufacturing tolerances shall be clearly noted on the approved shop drawings. Finished ties shall not deviate from any indicated dimension by more than the manufacturing tolerance associated with that dimension.

B. Forms:

1. Method of Production: Monoblock ties shall be manufactured by the long line process:

a. Forms shall be rigid and shall be constructed of material that will result in finished ties conforming to the shape, lines, dimensions and tolerances called for on the approved shop drawings.

b. Forms shall be constructed to permit movement of the tie without damage during release of the prestressing force.

c. Forms shall provide proper marking with indented or raised letters or numerals to identify the Owner, Supplier, day and year of manufacture, and other information, as indicated in the Contract Documents.

C. Placement of Prestressing Steel:

1. Prestressing force in each of the tendons shall be 16,750 pounds plus or minus 500 pounds.

2. The load shall be applied in two (2) increments. An initial load of approximately 1000 pounds shall be applied to the individual tendons to straighten them, eliminate slack, and provide a starting or reference point for measuring elongation.

3. Prestressing force shall be determined by one (1) measuring tendon elongation and two (2) by either checking jack pressure on a calibrated gauge or by the use of a calibrated dynamometer. The cause of discrepancy that exceeds 5 percent shall be ascertained and corrected. Elongation requirements shall be taken from average load elongation curves for the steel used.

4. Tendons shall be stretched either individually or simultaneously. If tendons are stretched simultaneously, provision for taking up slack and equalizing stress shall be made individually as required to induce approximately equal stress in each tendon.

5. Transfer of force from bulkheads of the pretensioning bed to the concrete shall be accomplished by gradual and simultaneous detensioning of all tendons. Exposed tendons shall be cut near the tie end. The projection of tendons beyond the ends of the ties shall be no more than 1/8-inch.

D. Mixing, Placing, and Curing of Concrete:

1. Preparation for Placing Concrete:

a. Prior to the placing of concrete, equipment for mixing the concrete shall be clean, debris shall be removed from spaces to be occupied by the concrete, the forms shall be thoroughly coated with a bond-breaker, and the reinforcement shall be thoroughly cleaned of deleterious coatings. The iron shoulder and prestressing wire shall not be contaminated with bond-breaker or other substance that would interfere with bond development. The forms shall be inspected for alignment and tightness of joints and dimensional accuracy of the position of bulkheads, prestressing steel, and inserts shall be verified.

b. Proportioning of Component Materials:

1) Fine and coarse aggregates and cement shall be measured by weight. Weights of aggregates shall be based on a saturated surface dry condition corrected for free moisture.

2) Water and liquid admixtures can be measured by either weight or volume.

c. The accuracy of measurement of the various components of concrete shall be within the following limits:

1) Cement: 1 percent.

2) Water: 1 percent.

3) Fine aggregate: 2 percent.

4) Coarse aggregate: 2 percent.

5) Cumulative aggregate: 2 percent.

6) Admixtures: 1 percent.

2. Mixing of Concrete:

a. Mixing equipment shall be capable of combining specified materials within the time specified by the equipment Supplier into a thoroughly mixed and homogeneous mass, and discharging the mixture without segregation.

b. Concrete shall be mixed until there is a uniform distribution of the materials and shall be discharged completely before the mixer is recharged.

c. Optimum mixing time shall be established by the equipment Supplier's recommendations. Generally, minimum mixing time shall be one (1) minute for batches of one (1) cubic yard or less. This mixing time shall be increased by at least 15 seconds for each cubic yard, or fraction thereof, of capacity more than one (1) cubic yard. Mixing time shall not exceed three (3) times the specified time.

3. Conveying:

a. Concrete shall be conveyed from the mixer to the place of final deposit in the shortest possible time by methods that will prevent segregation or loss of materials.

b. Equipment for chuting, pumping, and pneumatic conveying of concrete shall be of such size and design as to ensure flow of concrete at the delivery location without segregation of materials.

4. Depositing:

a. Concrete shall be deposited as nearly as practical in its final position no more tha 90 minutes or 300 drum revolutions after the introduction of mixing water, whichever is less. No concrete that has partially hardened or has been contaminated by foreign materials shall be used.

b. Concrete shall not be placed when the form temperature is below 50 degrees Fahrenheit. Forms shall be preheated if necessary to prevent concrete from falling below 50 degrees Fahrenheit. Concrete shall have a minimum temperature of 50 degrees Fahrenheit, and a maximum temperature of 90 degrees Fahrenheit. When concrete is placed at an ambient temperature of 90 degrees Fahrenheit or greater, the recommendations of ACI 305 shall be followed to prevent rapid drying and other detrimental effects of elevated temperature on fresh concrete.

5. Consolidating:

   a. Concrete shall be thoroughly consolidated by vibration during placement, and shall be thoroughly worked around the prestressing elements and embedded fixtures and into corners of the forms. Consolidation at the ends of ties is paramount to comply with the void tolerance.

   b. External form vibration shall be used, supplemented, if necessary, by internal vibration to obtain a uniform mix and be sufficient to yield concrete with a density established by the mix design.

   c. Care shall be taken to assure that forms are not damaged during consolidation.

6. Surface Finishing-Bottom of Tie:

   a. The bottom surface of the tie shall have a rough screed or broom finish. Two (2) ties, which show the required bottom surface condition, shall be set aside from an early batch for acceptance.

7. Testing Fresh Concrete:

   a. The first and last representative batch shall be tested. One additional test shall be performed on each bed cast. If the first representative batch requires adjustment to the mix, each subsequent batch shall be tested until no further adjustment is necessary.

   b. Slump:

      1) When measured in accordance with ASTM C143/C143M, the slump shall meet the mix design requirements when concrete is placed in the forms.

      2) For self-consolidating concrete (SCC) slump shall be measured in accordance with ASTM C1611/1611M and meet the mix design requirements when concrete is placed in the forms.

   c. Air Content: When measured in accordance with ASTM C231/C231M, the range of air content in the plastic concrete shall have a minimum 3.5 percent air void content in the hardened concrete.

   d. Temperature: The temperature of freshly mixed concrete shall not exceed 90 degrees Fahrenheit.

8. Curing:

   a. Immediately after placing and consolidating the concrete, the exposed surface shall be covered with impermeable sheeting.

   b. Concrete shall not be placed in forms whose temperature is less than 40 degrees Fahrenheit and the concrete temperature shall not be allowed to fall below 50 degrees Fahrenheit between casting and transfer of prestress.

   c. The rate of temperature rise in the concrete shall not exceed 35 degrees Fahrenheit per hour and the maximum concrete temperature shall not exceed 160 degrees Fahrenheit. Transfer of prestress shall not be carried out at a concrete temperature above 140 degrees Fahrenheit. The heating method used shall be such that ties in a bed are at a similar temperature.

d. Curing shall be done in accordance with established procedures to produce concrete strength as specified.

9. Detensioning: Stress transfer shall be performed in a controlled manner with hydraulic jacks. The forms shall be free to move and the stress in wires shall be transferred at the same time and same rate. No wire shall be cut until it is completely detensioned.

E. Removal of Ties from Forms and Finishing:

1. Ties shall be removed from forms in a manner such as to avoid damage.

2. Surface Finishing, Inspection, and Repair of Surface Defects:

a. Every tie produced shall be visually inspected by the Supplier.

b. Formed surfaces of the finished tie shall have a uniformly dense surface. The surface of the rail seat shall have a smooth finish and be free from honeycomb, surface irregularities, and air holes more than 1/8-inch diameter. Other surfaces shall have a smooth finish that may contain honeycomb not to exceed 2 percent of the surface and a maximum void diameter of 1/4-inch.

c. Defects described below shall be repaired in accordance with the Suppliers approved tie repair procedures:

1) Surface conditioning shall be undertaken on surfaces containing air pockets. The maximum size of any one pocket shall not exceed 3/8-inch diameter by 1/4-inch deep.

2) Ties with voids not deeper than 3/4-inch around and not more than two end wires shall be repaired. Ties with voids beyond this limit will be rejected.

3) Corner breakage less than 1/2-inch deep and 1-1/2-inches along the end faces need not be repaired providing reinforcing wire is not exposed. If the wire is exposed the breakage shall be repaired.

4) Corner breakage from 1/2-inch to 1-1/2-inches in depth shall be repaired. Corner breakage more than that will be rejected.

5) Prestressing wires protruding more than 1/4-inch beyond the concrete surface of the end of the tie shall be cut back. Sharp ends, which would be hazardous in handling, shall be smoothed or cut back.

2.04 SOURCE QUALITY CONTROL

A. Concrete Tie and Fastener Tests:

1. Prior to approval of the concrete tie design, sample ties shall be subjected to testing and acceptance in accordance with AREMA Manual Chapter 30, Section 4.9 Testing of Monoblock Ties except as modified herein. A separate test series shall be conducted for each cross tie supplied.

2. The following test loads shall be used:

a. Rail Seat Positive Bending Moment Test:

1) Test Load (P):

a) P = 28.1 kips.

2) Positive Moment at Rail Seat (M):

a) 8 feet -3 inch tie: M = 150 in-kips

b) 8 fet - 6 inch tie: M = 165 in-kips

b. Center Negative Bending Moment Test:

1) Test Load (P)- :

a) 8 feet - 3 inch tie: P = 8.9 kips.

b) 8 feet – 6 inch tie: P = 8.0 kips.

2) Negative Moment at Center of Tie (M):

a) 8 feet 3 inch tie: M = 120 in-kips

b) 8 feet – 6 inch tie: M = 108 in-kips

c. Bond Development and Ultimate Load Test

1) Test Load (P)

a) P = 1.5 x 28.1 = 42.2 kips

2) Ultimate Load (PU)

a) PU = 1.7 x 28.1 = 47.8 kips

b) The ultimate load at ultimate failure shall exceed 47.8 kips.

3. Existing concrete tie and fastener designs may be submitted for approval if previous test results show design meets the requirements specified herein.

4. Rail Fastener Electrical Resistance and Impedance Tests:

a. Test procedure and acceptance criteria for impedance test shall be in accordance with AREMA Manual Chapter 30, Section 2.8 Test 7: Fastener Electrical Impedance Test.

b. Test Procedure for Resistance Test: Secure two short pieces of 115 RE rail to the tie using complete concrete tie fastenings. The rail pieces shall be no longer than the width of the tie. Clean contact points on each rail and attach cables. Clean a contact point on a pretensioned tendon near the middle of one end of the tie and attach a cable (herein after designated as a ground).

1) Dry Test – Apply 500 volts DC from each rail to ground with an accuracy of +/- two percent.

2) Wet Test – Immerse the complete rail and tie fastening assembly in water for a minimum of six hours at room temperature. Within one hour after removal from the water, without drying, test the

assembly for electrical resistance. Apply 500 volts DC from each rail to ground with an accuracy of +/- two percent.

3) Acceptance Criteria - The minimum resistance for 500 volts DC shall be 10 megohms when dry and 0.4 megohm when wet.

B. Rail Seat Pads:

1. Acceptance design tests for rail seat pad shall consist of the following:

a. Specimens: Perform the following tests on each of two (2) specimens. The specimens shall be manufactured and cured in the same manner as the final product. Use a separate pair of specimens for each test, except the accelerated aging tests. Prior to testing, condition specimens for at least 7 days at 74 degrees Fahrenheit and 50 percent relative humidity. Failure of either of the two (2) specimens to meet requirements will be cause for rejection.

b. Hardness: Measure the hardness in accordance with ASTM D2240. The reading on each pad shall be between 50 and 80 durometer, Shore A. Average the two (2) readings and record the average for reference in production testing.

c. Tensile Strength, measured by ASTM D412: shall be minimum of 1,500 pounds per square inch.

d. Ultimate Elongation, measured by ASTM D412: shall be minimum of 250 percent.

e. High Temperature Compression Set: Using Method B of ASTM D395 with a Type 2 specimen, test for 22 hours at 212 degrees Fahrenheit. The compression set shall not exceed 25 percent.

f. Compression Set at Minus 65 degrees Fahrenheit: Using ASTM D1229, test for 22 hours at minus 65 degrees Fahrenheit. The specimen thickness shall be 6.0 plus or minus 0.2-millimeter. The compression set at 30 minutes after release (t30 reading) shall not exceed 40 percent.

g. Accelerated Aging: Using ASTM D573, age the elastomer for 48 hours at 212 degrees Fahrenheit. Measure and record the change in hardness, tensile strength, and ultimate elongation. The tensile strength shall not decrease more than 15 percent. The ultimate elongation after aging shall be at least 200 percent and shall be at least 60 percent of the durometer A scale. The durometer A scale shall not vary more than 10 points from pre-aging values.

h. Resistance to Ozone Cracking: Prepare the specimens in accordance with procedure A of ASTM D1149. Test the specimens in accordance with ASTM D1149 at a temperature of 104 degrees Fahrenheit and an ozone concentration of 50 parts per hundred million. The elastomer shall not exhibit cracking when examined in accordance with ASTM D1149 at the end of a 100 hour exposure.

i. Oil Absorption: Using ASTM D471, conduct one test with ASTM No. 3 oil at 212 degrees Fahrenheit for 70 hours and conduct another test using a different sample with ASTM No. 1 oil at 212 degrees Fahrenheit for 70 hours to determine the volume change of the elastomer. For No. 1 oil, the volume change shall not exceed minus 10 or plus 20 percent. For No. 3 oil, the volume change shall not exceed 100 percent.

j. Volume Resistivity: Apply 100 volts DC for three (3) minutes. The volume resistivity, measured in accordance with ASTM D257, shall be at least 1 x 1012 ohm-cm.

k. Water Absorption: Using ASTM D570, test 70 hours at 212 degrees Fahrenheit in distilled water. The volume change shall not exceed plus 35 or minus zero percent.

C. Fastening Assembly Tests:

1. Fastener assemblies shall be tested and accepted in accordance with AREMA Manual Chapter 30, Section 2.6.

D. Daily Production Quality Control Tests:

1. Daily Production Quality Control Testing:

a. Production quality control testing shall be performed in accordance with AREMA Chapter 30, Section 4.9.2 Production Quality Control of Monoblock Ties.

PART 3 - EXECUTION

3.01 INSTALLATION

A. Concrete cross ties shall be installed in accordance with track construction requirements.

END OF SECTION

SECTION 34 11 36.13

DIRECT FIXATION FASTENERS

PART 1 - GENERAL

1.01 SUMMARY

A. Section includes:

1. Requirements for furnishing all labor, materials, and equipment for manufacturing, testing, fabricating, and delivering of all direct fixation fasteners.

B. This Section shall serve as a performance specification for the direction fixation fasteners.

1.02 REFERENCES

A. This Section incorporates by reference the latest revision of the following documents:

1. American Railway Engineering and Maintenance-of-Way Association (AREMA):

a. AREMA Manual for Railway Engineering (AREMA Manual).

2. American Institute of Steel Construction (AISC):

a. AISC Steel Construction Manual.

3. ASTM International (ASTM):

a. ASTM A36/A36M Standard Specification for Carbon Structural Steel.

b. ASTM A123/A123M Standard Specification for Zinc (Hot-Dip Galvanized) Coatings on Iron and Steel Products.

c. ASTM A148/A148M Standard Specification for Steel Castings, High Strength, for Structural Purposes.

d. ASTM A536 Standard Specification for Ductile Iron Castings.

e. ASTM A730 Standard Specification for Forgings, Carbon and Alloy Steel, for Railway Use.

f. ASTM D257 Standard Test Methods for DC Resistance or Conductance of Insulating Materials.

g. ASTM D395 Standard Test Methods for Rubber Property - Compression Set.

h. ASTM D412 Standard Test Methods for Vulcanized Rubber and Thermoplastic Elastomers-Tension.

i. ASTM D429 Standard Test Methods for Rubber Property - Adhesion to Rigid Substrates.

j. ASTM D471 Standard Test Method for Rubber Property - Effect of Liquids.

k. ASTM D573 Standard Test Method for Rubber - Deterioration in an Air Oven.

l. ASTM D1149 Standard Test Methods for Rubber Deterioration - Cracking in an Ozone Controlled Environment.

m. ASTM D1229 Standard Test Method for Rubber Property - Compression Set at Low Temperatures.

n. ASTM D2240 Standard Test Method for Rubber Property - Durometer Hardness.

o. ASTM E162 Standard Test Method for Surface Flammability of Materials Using a Radiant Heat Energy Source.

p. ASTM E662 Standard Test Method for Specific Optical Density of Smoke Generated by Solid Materials

q. ASTM F3125/F3125M Standard Specification for High Strength Structural Bolts, Steel and Alloy Steel, Heat Treated, 120 ksi (830 MPa) and 150 ksi (1040 MPa) Minimum Tensile Strength, Inch and Metric Dimensions.

r. ASTM G101 Standard Guide for Estimating the Atmospheric Corrosion Resistance of Low Alloy Steels.

4. The Society for Protective Coatings (SSPC):

a. SSPC SP 5 White Metal Blast Cleaning.

1.03 SUBMITTALS

A. Submit:

1. Technical Data: Include shop drawings for each type of fasteners and all information including details showing dimensions, arrangement, and material description for each component in fastener assembly.

2. Product Data: Product data, catalog cuts, drawings, material specifications, and installation instructions for each component in the fastener assembly and furnished products.

3. Quality Control Program:

a. A detailed narrative describing procedures to be utilized for the Work and a description of the organization to be used on the Contract.

4. Qualification Statement: Documentation pertaining to fasteners conformance to the requirements as specified herein. Document shall include Contractor's certification that furnished products meet specified requirements.

5. Spare Parts:

a. Provide ten (10) spare standard direct fixation assemblies, including clips, insulators, plates, and anchor inserts as spares.

B. Transmit:

1. Samples:

a. Furnish two (2) identical samples of the direct fixation fastener.

b. Label each sample indicating:

1) Contract Name and Number.

2) Name of Contractor and Subcontractor.

3) Material or equipment represented.

4) Name of manufacturer and brand.

5) Reference specifications section and article numbers.

2. Certifications:

a. Rail clip Supplier's approval of rail hold-down spring clip application on proposed direct fixation fastener as specified herein.

b. Certification for each elastomer batch used as specified herein.

3. Threaded element installation data as specified herein.

4. Direct Fixation Fastener Testing: Provide test results documentation as required for the Work as specified herein.

1.04 QUALITY ASSURANCE

A. Develop and maintain a quality control program regulating methods, procedures, and processes to ensure compliance with standards of quality required.

B. Work undertaken by the Contractor before approval of Quality Control Program will be at the Contractor's risk:

1. Keep complete records of inspection work by the Contractor and make available to the Resident Engineer and other agencies during the duration of the Contract.

C. Tolerances:

1. Fabrication Tolerances:

a. Length and Width: Plus or minus 1/16-inch.

b. Thickness: Plus or minus 0.03-inch.

c. Squareness: Plus or minus 1-degree (in a 360-degree circle).

d. Centering of holes: Plus or minus 1/32-inch.

e. Diameter of holes: Plus or minus 1/16-inch.

f. Rail seat flatness: Plus or minus 1/32-inch.

1.05 DELIVERY, STORAGE, AND HANDLING

A. Fasteners shall be packed and shipped in a manner that shall prevent a load on any fastener from exceeding 1,000 pounds. Fasteners shall not be stored by the Contractor in a wet location or where the ambient temperature will exceed 120 degrees Fahrenheit.

B. Fasteners and assemblies shall be packaged to permit outdoor storage.

C. Fastener bodies shall be palletized and banded. Rail hold-down assemblies, shoulders, bolts, nuts, and other loose items shall be packaged by component type in secure shipping kegs, boxes, or bags. All items shall be clearly identified as to the contents.

D. Damage: Replace fasteners and assemblies damaged during packaging, shipping, storage, and handling. Special care shall be taken to protect the threaded lengths of bolts to prevent damage.

PART 2 - PRODUCTS

2.01 PERFORMANCE REQUIREMENTS

A. Performance / Design Criteria:

1. The spring rate for direct fixation fasteners of 115 RE rail shall be between 94,000 pounds per inch and 200,000 pounds per inch for vertical loads between 4,500 pounds and 12,000 pounds.

2. Standard direct fixation fastener for 115 RE rail with longitudinal restraint between 2,000 and 3,500 pounds per rail seat.

3. Special trackwork direct fixation fastener for 115 RE rail with longitudinal restraint between 1,600 and 3,500 pounds per rail seat.

4. Restraining rail direct fixation fastener with longitudinal restraint between 2,000 and 3,500 pounds per rail seat. Fastener shall be able to accommodate a restraining rail bolted to the running rail.

5. Electrical Isolation:

a. The fastener shall provide an electrical surface leakage distance not less than 1-3/4-inches measured from the grounded portion of the fastener to the charged portion by the most direct path that does not pass through an insulating material, and not less than 1/4-inch when measured passing through an insulating material.

b. The insulation requirements shall be met within the body of the fastener. No separate or detachable insulating components such as rail base pads or spring clip insulators shall be used.

c. No surface cut-outs, gaps, edge voids, or edge cut-outs will be allowed that could allow accumulation of dirt, metallic particles, or other material that could provide electrical leakage to ground.

d. Each fastener shall be furnished with a High Density Polyethylene shim.

2.02 PRODUCTS

A. Manufacturers:

1. Direct fixation fastener Manufacturers are required to have five years of direct fixation fastener in-service performance history.

B. Manufactured Products:

1. Direct Fixation Fastener:

a. Types of Direct Fixation Fastener.

1) Standard rail fastener, with or without cant.

2) Restraining rail fastener, with or without cant.

3) Special trackwork fasteners.

2. Fastener Shims:

a. Shape, size, and configuration of shims: Conform to the overall configuration of the direct fixation fastener with 1/2-inch extending beyond the fastener on all sides.

b. Shims shall be designed so that they can be simply installed and removed. Installation or removal shall not require the removal of the fastener body. The design shall incorporate a positive means of preventing the shims from displacement under operating conditions.

c. Shims shall be fabricated from black high density polyethylene (HDPE) and have matte finish on both sides.

3. Anchor insert assembly:

a. Anchor Bolts and Other Threaded Elements:

1) Threaded elements shall be high strength steel conforming to the chemical and mechanical requirements of ASTMF3125/F3125M, and having Class 2A and 2B thread fit.

2) Anchor bolts: 7/8-inch diameter, of sufficient length to provide a minimum of 2-inches of insert thread engagement with 1/2-inch of vertical shims under the rail fastener.

3) Threaded elements in the fastener shall include a positive means of preventing the loosening of the element due to in-service vibrations.

4) Anchor bolts shall not pre-compress the elastomer in the installed position.

5) Threaded element installation data shall include, but not be limited to, the bolt torque range in foot-pounds. The torque range shall provide the minimum tension as specified by the AISC Steel Construction Manual.

6) Bolts shall be coated with a water-resistant coating as thread protection against rusting prior to installation.

7) Washers used with anchor insert assemblies shall be galvanized.

b. Anchor Inserts:

1) The anchor inserts shall, as a minimum, conform to ASTM F3125/F3125M, or ASTM A536 (Grade 65-45-12), and shall have a Class 2B thread fit.

2) As part of the insert, there shall be a feature to prevent rotation of the insert after the concrete has reached its design strength.

3) Type I anchor insert shall have a minimum length of 4-1/2-inches and a maximum length of 5-1/2-inches allowing for a minimum 3-inch engaging threaded length.

4) Type II anchor inserts shall have a minimum length of 3-1/2-inches and a maximum length of 4-1/2 inches and a minimum 2-inch engaging thread length.

5) In the installed position, the top of the anchor insert shall provide a flat surface parallel to the rail base with a minimum of 1/8-inch bearing width surrounding the anchor bolt hole.

6) Furnish with an installed plug of metal or plastic material to preclude the entrapment of moisture, concrete, or other foreign materials:

a) Plug: Removable by socket or other common device and capable of reinsertion, and if reinserted, still preclude concrete and other foreign materials from entry.

c. Anchor insert coating on exterior surfaces:

1) 100 percent dry powder epoxy resin such as Scotch Kote Brand Protective Resin No. 323, manufactured by: the Minnesota Mining and Manufacturing Company (3M), and Corvel Epoxy ECB-1363A, manufactured by the Polymer Corporation, or approved equal.

2) Before coating, the insert shall be degreased and cleaned to white metal in accordance with SSPC SP 5.

3) Apply coating in accordance with the coating Supplier's recommendations and the following general requirements, or an approved equal:

a) No thinner than 10 mils or thicker than 20 mils.

b) No runs, sags, or chips.

c) Test thickness by a magnetic millimeters gauge at no less than two locations on the insert.

d) Tested in accordance with ASTM D2440: hardness not less than 85 or more than 90 Shore D.

e) Test coated insert for pin holes and breaks in a weak electrolytic solution:

i) Immerse the coated insert in a weak electrolytic solution to within 1/4-inch of the top surface of inserts and contact a positive electrode with the non-coated, threaded, internal area of the insert. Place negative lead in the solution.

ii) Electrolytic solution: potable water with resistivity maintained to within 1,000 to 1,500 ohm-cm.

iii) Apply a 100 volt DC electrical current between the electrolyte and the insert.

iv) Perform the testing at the frequency required in the sequential statistical quality control plan developed by the epoxy coating applicator.

v) Coating Acceptance Criteria: Circuit not closed when the insert is immersed in the electrolytic solution.

vi) Average defective rate: Not more than 2 percent.

vii) Maximum defective rate: Not more than 5 percent.

viii) Demonstrate defective rates at a 90 percent degree of confidence.

4. Rail Fastening Spring Clips:

a. Spring clips shall be right-hand configuration.

b. Lateral rail position adjustment by the hold down assembly shall not be permitted.

c. Design shall not be dependent upon elastomeric components in torsion.

d. Installed into a fixed shoulder, integral to the fastener top plate.

e. No part of the clip shall protrude below the base of rail.

f. The clip shall not have point contact. The clip shall be such that lateral rail movements within the confines of the shoulders will not produce transverse denting, carving, or scoring of the rail base. The clip shall be such that longitudinal rail slippage will not produce overstressing, ending, twisting, or other damage to the clips, and will not damage the rail.

g. Design not to permit rail hold-down assembly or the means of preventing lateral movement of the rail to make point contact against the rail. If contact is made in the static or dynamic state, allow no less than 0.125-inch in dimension and no less than 0.15 square inch in area.

2.03 MATERIALS:

A. Metal Components:

1. Metal plate components shall be made from forged, cast steel or ductile iron.

a. Cast steel: ASTM A148/A148M, Grade 80-40 or equal.

b. Forged steel: ASTM A730, Grade C or equal.

c. Ductile iron: ASTM A536, Grade 65-45-12 or equal.

2. Corrosion Resistance Index: 4.0 minimum, calculated for rolled steel products and other steel with a chemical content within the composition range listed in ASTM G101 and containing less than 1.0 percent manganese.

B. Elastomer:

1. Fabricated of 51 percent minimum natural rubber.

2. The design Durometer Shore A shall be 50 plus or minus 10 for natural rubber as measured in accordance with ASTM D2240.

3. Compressive strain of the elastomer: No more than 25 percent of its uncompressed thickness for a load of 14,000 pounds, applied vertically to the rail to a single fully assembled fastener. Include pre-compression of elastomer in fasteners in the installed position in determining the total compressive strain.

C. Requirements:

1. Elastomeric component of the direct fixation fastener shall be fully vulcanize bonded to its frame and top plate and not less than 1/4-inch thick. The fastener shall also include bonded elastomer on its top surface to a plate.

2. Water Absorption: ASTM D471:

a. Test Conditions: In accordance with ASTM D471.

b. Acceptance Criteria: Water absorption by change in volume after 24 hours immersion shall not exceed 0.5 percent.

3. Tensile Properties: ASTM D412:

a. Natural Rubber Tensile Strength: Minimum 2,500 pounds per square inch.

b. Ultimate Elongation: Minimum 350 percent.

4. Resistance to Compression Set: ASTM D395, Method B:

a. Test Condition: Natural Rubber, 22 hours at 158 degrees Fahrenheit.

b. Natural Rubber: Maximum 25 percent.

5. Resistance to Aging in Air: ASTM D573:

a. Test Condition: 72 hours at 158 degrees Fahrenheit.

b. Natural Rubber, Retention of Tensile Strength: Minimum 75 percent.

c. Retention of Ultimate Elongation: Minimum 75 percent.

d. Change in Hardness: Maximum 10 points Durometer Shore A.

6. Resistance to Ozone Cracking: ASTM D1149:

a. Test Conditions: Specimens prepared in accordance with Procedure A of ASTM D1149 shall be tested in accordance with ASTM D1149 at a temperature of 104 degrees Fahrenheit and an ozone concentration of 50 parts per hundred million (pphm).

b. Acceptance Criteria: Exhibit no cracking when examined in accordance with ASTM D1149 at the end of a 100 hour exposure.

7. Adhesion to Metal: ASTM D429, Method B:

a. Test Condition: Test specimen shall duplicate actual direct fixation fastener fabrication in respect to type of steel, preparation of steel, bonding agents, and elastomer.

b. Acceptance Criteria: The failures of the elastomer shall be a type R failure, i.e., elastomer tears before bond fails.

8. Resistance to Oil: ASTM D471:

a. Test Condition: 70 hours at 74 degrees Fahrenheit in ASTM No. 1 oil.

b. Acceptance Criteria: Volume change shall not exceed minus 10 percent or plus 20 percent.

9. Low Temperature Compression Set: ASTM D1229:

a. Test Condition: 70 hours at 14 degrees Fahrenheit.

b. Acceptance Criteria: Compression at 30 minutes following release (t_{30} reading): shall not exceed 65 percent.

10. Flame Spread and Smoke Generation: ASTM E162 and ASTM E662:

a. Test Condition: Determine flame propagation index (Is) and smoke generation specific optical index (Ds) for flaming and non-flaming modes.

b. Acceptance Criteria: No flaming drippings when tested. No acceptance criteria are specified for the flame propagation index (Is) and smoke generation specific optical index (Ds). Report these indices to the Resident Engineer for information only.

11. Volume resistivity: ASTM D257:

a. Test Condition: Apply 1,500 volts DC (minimum) for 3 minutes, and measure volume resistivity in accordance with ASTM D257.

b. Acceptance Criteria: Volume resistivity shall be at least 1 x 10^{12} ohm-centimeters dry as molded and at least 1 x 10^{11} ohm-centimeters after 24 hours immersion as determined below.

2.04 FABRICATION

A. The direct fixation fastener shall be for 115 RE rail, with spring clips in the right-hand configuration.

B. Provide, on both sides of the rail base, a positive means of preventing more than 1/8-inch total lateral movement of the rail base relative to the shoulders in case of failure or loosening of one or both spring clips.

C. The lateral rail restraint shall extend a minimum of 3/8-inch vertically, but not higher than 1-3/4-inches above the base of rail in the installed position.

D. All direct fixation fastener shall utilize a spring clip type element with non-threaded components to form the rail hold down assembly, fasteners shall utilize the Pandrol E-clip or approved equal.

E. The assembled standard rail and restraining rail direct fixation fasteners shall provide a canted rail seat to provide a 40 to 1 rail cant when mounted to a flat, level surface. Assembled direct fixation fasteners tapered rail seat shall be towards the centerline of the track.

F. The assembled special trackwork fasteners, in addition to the standard rail and restraining rail fasteners to be used in the limits of special trackwork, as specified in the Contract Drawings, shall provide a rail seat with no cant when mounted to a flat, level surface.

G. Direct fixation fasteners will have two anchorage insert assemblies each for securing the fastener to the plinth concrete.

H. Direct fixation fasteners shall be composed of as few components as is economically and technically practicable for ease of assembly, disassembly, and maintenance, and shall be designed to permit installation and replacement of the entire assembly or its components by one worker using standard conventional hand tools.

I. Direct fixation fastener shall be designed to dampen lateral and vertical dynamic forces transferred to anchor bolts.

J. In its installed position, the underside of the fastener shall be a flat plane. Base protrusions into the plinth concrete will not be allowed.

K. Bonding of the direct fixation fastener to the plinth concrete shall not be permitted.

L. Fastener plates shall have full bearing on the elastomer in positions of lateral adjustment and have a means of preventing displacement of the elastomer.

M. Stability of the fastener shall not be dependent solely upon the strength of bonding of the elastomer to metal.

N. Provide fastener that when the spring clips are removed, the rail can be lifted vertically until it is completely free of the fastening shoulder without disturbing the horizontal or vertical alignment of the shoulder or the adjacent restraining rail bracket.

O. Dimensional and Shape Requirements:

1. The fastener shall be rectangular or elliptical in shape. The frame and top plate shall include keying and/or turned up plate edges such that loss of elastomer bond shall not result in complete loss of the fasteners ability to hold line and gauge. The fastener should be designed to shed water without leaving pools.

2. Height:

a. Direct fixation fasteners with canted rail base shall have a height measured between the top surface of the plinth concrete and the rail base at the rail centerline with the direct fixation fastener in the installed position of between 1-1/2 inches and 2 inches, exclusive of shims.

b. Direct fixation fasteners without canted rail base shall have a height measured between the top surface of the plinth concrete and the base of the running rail with the direct fixation fastener in the installed position of between 1-1/2-inches inches and 2 inches, exclusive of shims.

c. No part of the direct fixation fastener shall project more than 3-inches above the rail base in the installed position.

3. Running Rail Fastener Length and Width:

a. Fastener body dimensions including elastomer:

1) Length: Measured perpendicular to the rail centerline, shall be between 13-1/2-inches and 16–inches.

2) Width: Measured parallel to the rail centerline, shall be between 6-1/2-inches and 8-inches.

b. No portion of the fastener in the installed position shall extend more than 9-inches toward the field side from the centerline of the running rail.

4. Retraining Rail Fastener Length and Width:

a. Fastener body dimensions including elastomer:

1) Length: Measured perpendicular to the rail centerline, shall be between 20-1/2 inches and 23 - inches.

2) Width: Measured parallel to the rail centerline, shall be between 7 inches and 8-1/2 - inches.

5. Special trackwork fastener length and width:

a. Fastener body dimension including elastomer:

1) Length: Measured perpendicular to the rail centerline. Dimensions as shown in Contract Drawings.

2) Width: Measure parallel to the rail centerline. Dimensions as shown in Contract Drawings.

6. Adjustment Requirements:

a. Lateral Adjustment:

1) Plus or minus 1/2-inch, minimum, provided at the anchor bolts.

2) Do not use friction as a means of preventing lateral movement.

3) If lateral adjustment employs serrations on any component:

a) Engage at least three serrations at interface.

b) Engage at least 3-inches of serration per fastener.

c) Machine or cast serrations to a minimum depth of 1/16–inch.

d) The minimum increment of lateral adjustment through serrated steel plates shall be 1/16-inches.

4) Each rail fastener requires components for specified increments of lateral adjustment. Components of the direct fixation fastener shall not be replaced or added to the basic configuration to laterally adjust the rail.

5) Provide 1/32-inch of lateral clearance between the rail seat and the rail for each direct fixation fastener.

2.05 SOURCE QUALITY CONTROL

A. Rail Fastener Qualification and Production Testing: Qualification and production tests for each rail fastener are required. Comply with the following procedures for both qualification and production testing. Perform tests as shown in Figure 1A herein for qualification testing and in Figure 1B herein for production testing:

1. Qualification Testing: At the Contractor’s expense. Prior to production, select for testing two (2) of each type of direct fixation fasteners. . Test each fastener as specified in Figure 1A, herein. Should any of the fasteners fail to meet the test requirements, test two (2) additional fasteners. In the event either of the two (2)

additional fasteners fail, re-design the fastener, submit new Technical Data, and start the qualification test sequence over.

2. Production Testing: At the Contractor's expense. Select for testing two (2) direct fixation fasteners from each 2,000 production lot fasteners. Test each fastener as specified in Figure 1B, herein. Should any of the fasteners fail to meet the test requirements, test two (2) additional fasteners of the same type from the production lot. In the event either of the two (2) additional fasteners fails, the entire lot shall be rejected or tested and only those successfully passing all tests shall be incorporated in the finished work.

3. Not less than fifteen (15) days prior to fastener shipments, certified statements for each elastomer batch used in the manufacture of the fasteners being delivered shall be submitted to the Resident Engineer for documenting compliance of each elastomer batch with the requirements, as specified herein.

4. In addition to the qualification and production tests, components of the fasteners shall be subject to full or partial testing for compliance with the Contract Documents.

5. Qualification and production testing to be performed at any testing facility in North America, including facilities at the Contractor's plant. Testing equipment shall be in good repair, of adequate capacity, and shall be verified or calibrated against certified standards that have a known traceable relationship to the National Research Council or the National Institute of Standards and Technology. Notify the Resident Engineer not less than fifteen (15) days in advance of dates scheduled for tests.

6. Previous Qualification testing reports may be submitted. Provided these reports are for an appropriate product with five (5) years of in-service history and past acceptable test results for Sound Transit, Qualification testing may be waived. Production testing shall be performed in all cases.

7. Production test results shall be submitted to the Resident Engineer at least fifteen (15) days prior to fastener shipment.

B. Static Tests: Perform each test listed below on two (2) specimens:

1. Vertical Load Test:

a. Procedure: Apply a vertical load increasing in increments of 1,000 pounds to a maximum load of 14,000 pounds at a rate not less than 500 pounds per minute and not more than 2,000 pounds per minute. Load shall be applied downward at the center of the rail head at the centerline of the fastener normal to the rail. For each increment of load, measure the vertical deflection of the rail head to the nearest 0.001-inch. Remove the load and measure and record the final position of the rail head. Plot the recorded values for vertical loads versus deflection on a graph, as shown in Figure 2, herein. Pre-cycle the fasteners by loading from 0 to 14,000 pounds two (2) times prior to measuring deflections.

b. Test Acceptance Criteria:

1) The load versus deflection curve: within the envelope shown in Figure 2 for loads in the range from 4,500 pounds to 12,000 pounds.

2) The spring rate of the fastener (slope of the load-deflection curve) shall not be less than 94,000 pounds per inch or more than

200,000 pounds per inch for loads between 4,500 pounds and 12,000 pounds:

a) Calculate the spring rate by applying the least-squares linear regression method to the recorded data to obtain a straight line load-deflection relationship.

b) Each recorded deflection shall be within 10 percent of the deflection calculated from the straight-line relationship over the loading range, from 4,500 pounds to 12,000 pounds.

c) After removal of the maximum load, the fastener shall return to within 0.005-inch of its original position within 1 minute.

3) At no time during the test shall any fastener component exhibit any sign of failure by slippage, yielding, or fracture. Slippage is defined to mean any movement of the fastener components relative to the initial position not attributed to deflection or yielding. The deflection measured at 14,000 pounds divided by the design thickness of the elastomer component shall be used to establish the fastener's compliance with the requirement for a maximum vertical deflection not to exceed 25 percent of the elastomer thickness. The values obtained when this test is repeated on all fasteners shall be within 20 percent of the initial test values.

2. Lateral Load Test:

a. Procedure: While applying a vertical load of 12,000 pounds downward, offset 3/4-inch from the center of the rail head towards the gauge side at the centerline of the fastener normal to the rail, apply a lateral load horizontally to the rail head at a point 0.625-inch below the top of the rail along the centerline of the fastener in a direction normal to the rail. Increase the load in increments of 1,000 pounds to a maximum load of 8,000 pounds, at a rate of not less than 500 pounds per minute and not more than 1,500 pounds per minute. For each load increment, measure the lateral deflection of the rail head at a point 0.625-inch below the top of the rail to the nearest 0.001-inch and record.

b. Remove the lateral load and measure and record the final position of the rail head. Plot the recorded values for lateral loads versus deflection on a graph similar to Figure 2, herein.

c. Test Acceptance Criteria:

1) The lateral deflection of the rail head for a lateral load of 4,000 pounds shall not exceed 0.15-inch.

2) The lateral deflection due to the maximum load: shall not exceed 0.37-inch.

3) Difference between the original and final positions of the rail head shall not exceed 0.027-inch.

4) No fastener component at any time during the test shall exhibit any sign of failure by slippage, yielding, or fracture.

3. Longitudinal Restraint Test:

a. Procedure: Support the rail end on a roller or other low friction support properly elevated to prevent the longitudinal load from binding the rail in the fastener. Apply load longitudinally to the rail at its base increasing in increments of 500 pounds to a maximum load of 10,000 pounds or until the rail is 2-inches from the initial position at a rate not less than 500 pounds per minute and not more than 1,500 pounds per minute. Each load increment shall be maintained until the longitudinal movement of the rail stops before increasing the load to the next increment. For each load, measure the longitudinal movement of the rail in relation to the top plate of the rail fastener to the nearest 0.01-inch and record. Remove the longitudinal load at slippage, measure and record the final position of the rail in relation to the top plate of the rail fastener. Measure and record the load applied at slippage for use in the Push-Pull Test, as specified herein. Plot the recorded values for longitudinal load versus movement on a graph as shown in Figure 3, herein and identify it as "Initial Test." Without altering test set-up, apply the load to the opposite end of the test rail and re-run the test in its entirety. Plot the recorded values for longitudinal load versus movement on a graph as shown in Figure 3, herein, and identify it as "Reverse Test."

b. Test Acceptance Criteria:

1) Longitudinal load versus deflection curve for standard fasteners, when plotted on Figure 3: entirely within the limits defined by limit lines A and B. At least 85 percent of test results shall fall within limits A and B and no more than 15 percent shall fall between B and C.

2) Longitudinal load versus deflection curve for special trackwork fasteners, when plotted on Figure 3: entirely within the limits defined by limit lines A and D.

3) Difference between the original (before initial test) and final (after reverse test) position of the rail: not to exceed the total rail slippage plus 0.24-inch.

4) No fastener component at any time during the test shall exhibit any sign of failure by slippage, yielding, or fracture except that slippage which may occur between the rail hold-down assembly and the rail.

5) Rail hold-down assembly longitudinal restraint: constant, uniform, and unbroken curve, which falls within the envelope shown in Figure 3 herein when plotted.

4. Lateral Restraint Test:

a. Procedure: Apply two (2) lateral loads, each increasing simultaneously in increments of 500 pounds to a maximum load of 2,500 pounds at the base of the rail, in the same direction, normal to the centerline of the rail and symmetrically on each side of the fastener centerline. Measure the lateral deflection of the rail at the intersection of the centerline of the fastener and the gage line of the rail to the nearest 0.001-inch and record after each increment of loading.

b. Test Acceptance Criteria:

1) No fastener component at any time during the test shall exhibit any sign of failure by slippage, yielding, or fracture.

2) Difference between the original and final positions of the gage line: not to exceed 0.062-inch.

3) Lateral deflection of the rail, when fully loaded: between 0.03-inch and 0.125-inch from the original gage line of the rail.

5. Vertical Uplift Test:

a. Procedure: Apply and secure a vertical load to the center of the rail head at the centerline of the fastener in a direction normal to the rail, alternating continually from a vertical downward load to a vertical upward load. Increase the upper and lower peaks per cycle in increments of 200 pounds to a maximum of 5,000 pounds downward and upward. Continually measure the loads and deflections to the nearest 0.001-inch and immediately record on a load-versus-time graph and deflection-versus-time graph, respectively. Remove the load and measure and record the final position of the rail head. Apply the reaction force to the uplift load by only securing the test block on which the fastener is mounted.

b. Test Acceptance Criteria:

1) Vertical deflection of the fastener for lifting load of 2,000 pounds: within 105 percent to 205 percent of the deflection for a 2,000 pound downward vertical load as determined from the vertical load test.

2) While vertical load is continuously varied from vertical downward loads to vertical uplift loads, the load-deflection curve shall be continuous and there shall be no other indication of backlash or freeplay at times when the load or the deflection changes direction.

3) After removal of the maximum load, the rail shall immediately return to within 0.005-inch of its original position within 1 minute.

4) No fastener components including the fastener anchor insert to the test block at any time during the test shall exhibit any sign of failure by slippage, yielding, or fracture.

C. Electrical Tests: Perform each test listed below on two (2) specimens:

1. Voltage Withstand Test:

a. Procedure: A complete, fully assembled fastener, configured as specified, shall have a ground plate placed below the elastomer. A DC potential of a minimum of 10 kilovolts shall be applied to the rail head for 1 minute. In the event of breakdown, record the breakdown voltage.

b. Test Acceptance Criteria: The elastomer shall complete this test with no visible damage such as splits, cracks, pinholes, or fractures. Perform all other electrical tests on the fastener.

2. Electrical Resistance Tests:

a. Procedure: Test a complete, fully assembled fastener, as specified herein, for electrical resistance. Before assembly, metal parts, anchor insert, spring clips, elastomer surfaces, and ancillary parts associated with the fastener shall be clean and dry. Assemble the fastener with a section of 115 pound RE rail, not less than 1-foot in length. Mount the test fastener

on a 1/4-inch thick metallic ground plate sized to extend 1/2-inch beyond all edges of the fastener. Use anchor insert assemblies supplied, or similar to that for use in actual field installation, to mount the fastener to the ground plate. Use the same number of bolts (or other devices) that will be used to anchor the fastener in-service. Verify that all parts that should be in electrical contact do not exhibit excessive contact resistance because of improper assembly or other causes. This shall apply, but is not necessarily limited to:

1) Rail to rail plate interface.

2) Rail hold-down assembly (clip) and rail.

3) Anchor bolts and bottom fastener plate (if present).

4) Anchor bolts and ground plate.

b. Dry conditions: 24 hours prior to testing, store the assembled fastener(s) in a clean, dry environment with ambient conditions of 60 degrees Fahrenheit to 80 degrees Fahrenheit and 50 to 70 percent relative humidity. Apply 100 volts (minimum) DC between the rail head and the ground plate for 3 minutes. Measure the applied voltage and resulting current flow, or directly measure the resistance with an accuracy flow, or directly measure the resistance with an accuracy of plus or minus 2 percent. Instrumentation used for direct measurement shall have a minimum 100 volt output capacity.

c. Wet conditions: Perform this test on the same fastener(s) that passed the dry electrical resistance tests. Place the assembled fastener in a nonmetallic trough or other suitable container. Size the container such that there is a minimum of 2-inches between the sides and bottom of the fastener/ground plate assembly and the sides and bottom of the container. In the event more than one (1) fastener is placed in the same container, maintain a 2-inch clearance between the edges of the ground plates on adjacent fasteners and the clearances cited above. Pour water into the container to a level midway up the rail web covering all surfaces of the fastener. Maintain this level of immersion for a minimum of 10 minutes. Ambient temperature of fastener surfaces (prior to immersion) of water, and air shall be 60 to 80 degrees Fahrenheit. Relative humidity shall be 50 to 70 percent. Water resistivity shall be 1,000 to 1,500 ohm-cm (use potable water and adjust resistivity by addition of sodium chloride). Drain the water from the container to a level 1/2-inch below the ground plate. Without drying or creating a condition that causes the fastener surfaces to dry, measure the resistance within two (2) minutes after draining as follows:

1) Apply 100 volts between the rail head and the ground plate for 15 seconds.

2) Measure the applied voltage and resulting current flow with an accuracy of plus or minus 2 percent. Calculate the DC wet resistance, or directly measure the resistance with an accuracy of plus or minus 2 percent. Ensure instrumentation used for direct measurement have a minimum 100 volt measuring capacity.

3) Repeat the resistance measurement every 5 minutes for the first hour, every 10 minutes for the second hour, and every 15 minutes thereafter to establish the wet resistance versus time characteristics of the fastener. Perform tests for at least 2 hours

after draining. The tests may be terminated after the first 2 hour test period if any three (3) consecutive measurements are at least 800,000 ohms or after another 2 hour test period, whichever comes first.

d. Test Acceptance Criteria:

1) Dry conditions: The minimum DC resistance shall be 10 megohms.

2) Wet conditions: A minimum resistance of 800,000 ohms for the average of three (3) consecutive readings.

3. Electrical Impedance Tests:

a. Procedure: Test a complete, fully assembled fastener for electrical impedance. Apply a potential of 50 volts AC RMS to the rail head for 3 minutes for each increment of measurement for frequencies from 10 hertz to 10 kilohertz in increments of 20 hertz up to 100 hertz, 200 hertz up to 1,000 hertz, and 2,000 hertz up to 10 kilohertz. Measure the impedance after 3 minutes with an accuracy of plus or minus 2 percent and record each frequency. Upon approval by the Resident Engineer, electrical resistance may be calculated by measuring current flow, and impedance may be calculated from the measurements of resistance and capacitance using the impedance equation, which applies to a resistance and capacitance in parallel:

1) Test Acceptance Criteria: The minimum impedance for any frequency between 20 hertz and 10 kilohertz with 50 volts AC RMS: 10,000 ohms.

D. Dynamic Tests: Perform each test listed below on two (2) specimens. For loads that are to be applied at the centerline of fastener, the manufacturer may choose to double the applicable loads and apply at the longitudinal midpoint between rail seats for testing purposes:

1. Dynamic to Static Stiffness Ratio Test:

a. Procedure. Apply vertical (compression) load to the rail head over the centerline of the fully assembled fastener. The load shall be of sinusoidal waveform over a range from 3,000 pounds to 7,000 pounds and shall be applied at a rate of 10 to 20 cycles per second. After a minimum of 1,000 cycles, measure and record the dynamic deflection of the fastener at 3,000 pounds and 7,000 pounds. Immediately after completing the dynamic deflection measurements, but only after the fastener deflection has stabilized, measure the static deflection at compression loads from 3,000 pounds to 7,000 pounds in 1,000 pound increments at a rate not exceeding 1,000 pounds per minute. Measure the deflections within an accuracy of 0.001-inch.

b. Test Acceptance Criteria:

1) Dynamic stiffness: Calculated by dividing the difference between the recorded maximum and minimum load value (the dynamic load) by the difference between the recorded maximum and minimum deflection (the dynamic deflection).

2) Static stiffness: Calculated by applying the least-squares linear regression method to the recorded data to obtain a straight line and determining the slope of the static load-deflection curve.

3) The ratio shall not exceed 1.5.

2. Vertical and Lateral Repeated Load Test:

a. Procedure. Apply loads to the rail head in such a manner as to produce a vertical downward load of 12,000 pounds, and lateral loads along the centerline of the fastener normal to the rail of 3,900 pounds to the gauge side of the rail head and 2,700 pounds to the field side of the rail head. Apply the vertical load to the rail head and the lateral loads shall be applied 0.625-inch below top of rail along the centerline of each fastener normal to the rail. Alternate application of the lateral loads, each combined with alternating application and release of the vertical load, for a total of 3,000,000 complete cycles for qualification testing or a total of 500,000 cycles for production testing. Application of the field side load and vertical load and then the gauge side load and vertical load shall constitute one (1) cycle. The frequency shall be regulated to prevent the temperature of the components from exceeding 158 degrees Fahrenheit. Do not re-torque threaded elements subsequent to the completion of the initial 500,000 cycles of loading.

b. Test Acceptance Criteria:

1) Withstand the 3,000,000 cycles for qualification testing or 500,000 cycles for production testing of load application with no evidence of failure.

2) Upon complete disassembly of the fastener and visual inspection, no fastener components shall exhibit any sign of failure by slippage, yielding, abrasion, or fracture.

3) No evidence of wear or grooving on the rail that would contribute to a failure of the rail.

4) Concrete test block at the anchor insert: no evidence of failure as a result of the dynamic test.

3. Anchor Bolt Repeat Load Test:

a. Procedure: After completion of the Vertical and Lateral Repeated Load Test, reassemble the fastener as specified using only the original components previously subjected to testing. With the gauge side anchor bolt loosened such that a minimum gap of 1/4-inch is between the underside of the bolt head and the anchor washer, repeat the Vertical and Lateral Repeated Load Tests for 15,000 cycles.

b. Test Acceptance Criteria:

1) Fastener: Withstand 15,000 cycles of loading with no evidence of failure by slippage, yielding, or fracture.

2) Rail: No evidence of wear or grooving that would contribute to a failure of the rail.

4. Push-Pull Test:

a. Procedure: Apply a cycling longitudinal load as close to the base of the rail as possible to slip the rail plus and minus 3/4-inch from the initial position of the fastener and relative to the fastener position, for a total of 50 cycles.

b. Immediately following this portion of the test, apply a cycling longitudinal load equal to 80 percent of the load recorded in the Longitudinal Restraint Test, as specified herein, shall be applied as in the procedure above for a total of 25,000 cycles. Do not reposition the rail hold-down assemblies at any time during this test.

c. Test Acceptance Criteria: Withstand the 25,000 cycles of loading with no evidence of failure. Upon visual examination, no component of the fastener shall exhibit any evidence of failure by yielding, abrasion, slippage or fracture, except that slippage which may occur between the rail hold-down assembly and the rail. The rail shall exhibit no evidence of wear or grooving that would contribute to a failure of the rail.

5. Uplift Repeated Load Test:

a. Procedure: Apply loads to the rail head of a fully assembled fastener to produce alternately a vertical downward load of 9,000 pounds and a vertical upward load of 1,000 pounds at the centerline of the fastener in a direction normal to the rail. Alternate the application of the vertical loads for a total of 1,500,000 complete cycles. Regulate the frequency to prevent component temperature from exceeding 158 degrees Fahrenheit. Apply the vertical loading during this part of the test at a rate of not less than 25 cycles per minute. If required for testing stability, install a mechanical stop 1/8-inch from each end of the rail, independent of the test rail fasteners.

b. Test Acceptance Criteria: Withstand 1,500,000 cycles of load application with no evidence of failure. Upon visual inspection, no component of the fastener shall exhibit any evidence of failure by yielding, abrasion, or fracture. The rail shall exhibit no evidence of wear or grooving that would contribute to the failure of the rail.

6. Dynamic Longitudinal Restraint Test:

a. Procedure: The dynamic longitudinal restraint test procedure is the same as for the static test specified herein, with an additional vibration load applied vertically to the rail head while the longitudinal load is applied. Vertical vibration load: 50 hertz cyclic load with amplitude of 2,000 pounds. Apply vertical load at the rail head at the mid-point between rail seats.

b. Test Acceptance Criteria:

1) Longitudinal load versus deflection plot is linear within the limits shown in Figure 3, herein. At no time during the test shall any component exhibit evidence of failure including permanent deformation.

E. Anchor Insert Tests:

1. General:

a. Anchor inserts used for testing shall conform to the design submitted.

2. Test Conditions: Fourteen (14) test anchor inserts for each anchor insert type shall be furnished by the Contractor. Seven (7) assemblies shall be retained by the Resident Engineer and the other seven (7) assemblies shall be numbered one

through seven. Anchor inserts two through seven shall be tested in cast concrete plinth utilizing the minimum plinth dimensions and specified reinforcement. Concrete shall have a compressive strength in accordance with cast-in-place concrete requirements, and this shall be verified by laboratory tests.

3. Static Load Tests:

a. Thread Failure Test (Anchor Insert Number 1):

1) Procedure: Anchor insert shall be held in a vise or other device and the bolt twisted to failure. To prevent bottoming before failure, the bolt shall be fitted with a spacer, cut washers, or other means. To provide minimum thread contact only, the spacer thickness shall be designed such that the minimum thread is engaged.

2) Test Acceptance Criteria: Anchor insert shall withstand 600 foot-pounds of torque without evidence of failure. After removal of the torque, the bolt shall be removed from the insert with a torque no greater than 600 foot-pounds. When torqued to failure, the failure shall be in the bolt threads, not the insert threads.

b. Torsion Test (Anchor Inserts Numbers 2 and 3):

1) Procedure: Anchor insert shall be subjected to a 600 foot-pound of torque applied to the cap bolt head with spacers used on the bolt to prevent bottoming.

2) Test Acceptance Criteria: Anchor insert shall not rotate and concrete shall not crack or show evidence of failure.

c. Restrained Pull-Out Test (Anchor Inserts Numbers 4 and 5):

1) Procedure: A steel plate with a hole in the center a minimum of 1/2-inch in diameter larger than the maximum diameter of the top of the insert shall be placed over the anchor inserts on the concrete test block surfaces. The anchor bolt shall then have an upward vertical load of a minimum of 20,000 pounds applied, held for a minimum of 1 minute, and then released.

2) Test Acceptance Criteria: Anchor insert shall have no evidence of failure from causes including but not limited to, slippage and cracking of the concrete at the indicated load.

d. Unrestrained Pull-Out Test (Anchor Inserts Numbers 6 and 7):

1) Procedure: Anchor insert shall have an upward vertical load applied in such a manner that no vertical load is applied to the concrete test block surface within a radius of 6 inches from the center of the insert. An upward vertical load of 7,500 pounds shall be applied and held for not less than 1 minute.

2) Test Acceptance Criteria: There shall be no evidence of failure from causes including, but not limited to, slippage, and cracking of the concrete to assembly bond at the specified loads.

PART 3 - EXECUTION

3.01 INSTALLATION

A. Direct fixation fasteners shall be installed in accordance with track construction requirements.

END OF SECTION

FIGURES (On Proceeding Pages)

1. **Figure 1A** - Qualification Tests
2. **Figure 1B** - Production Tests
3. **Figure 2** - Vertical Deflection Limits
4. **Figure 3** - Longitudinal Restraint Limits

FIGURE 1A

QUALIFICATION TESTS (QT)

STATIC TESTS (st)	**ARTICLE**	**TEST NAME/ABBR.**
VERTICAL LOAD TEST (VLT)	2.05.B.1	QT-ST-VLT
LATERAL LOAD TEST (LLT)	2.05.B.2	QT-ST-LLT
LONGITUDINAL RESTRAINT TEST (LORT)	2.05.B.3	QT-ST-LORT
LATERAL RESTRAINT TEST (LART)	2.05.B.4	QT-ST-LART
VERTICAL UPLIFT TEST (VUT)	2.05.B.5	QT-ST-VUT
ELECTRICAL TESTS (ET)	**ARTICLE**	
VOLTAGE WITHSTAND TEST (VWT)	2.05.C.1	QT-ET-VWT
ELECTRICAL RESISTANCE TEST (ERT)	2.05.C.2	QT-ET-ERT
ELECTRIC IMPEDANCE TEST (EIT)	2.05.C.3	QT-ET-EIT

DYNAMIC TESTS (DT)	**ARTICLE**	
DYNAMIC TO STATIC STIFFNESS RATIO TEST (DSSRT)	2.05.D.1	QT-DT-DSSRT
VERTICAL AND LATERAL REPEATED LOAD TEST (VLRLT)	2.05.D.2	QT-DT-VLRLT
ANCHOR BOLT REPEAT LOAD TEST (ABRLT)	2.05.D.3	QT-DT-ABRLT
PUSH – PULL TEST (PPT)	2.05.D.4	QT-DT-PPT
UPLIFT REPEATED LOAD TEST (URLT)	2.05.D.5	QT-DT-URLT
LONGITUDINAL RESTRAINT TEST (LORT)	2.05.D.6	QT-PFT-LORT
POST-FATIGUE TESTS (PFT)	**ARTICLE**	
VERTICAL LOAD TEST (VLT)	2.05.B.1	QT-PFT-VLT
LATERAL LOAD TEST (LLT)	2.05.B.2	QT-PFT-LLT
LONGITUDINAL RESTRAINT TEST (LORT)	2.05.D.6	QT-PFT-LORT
VERTICAL UPLIFT TEST (VUT)	2.05.B.5	QT-PFT-VUT
VOLTAGE WITHSTAND TEST (VWT)	2.05.C.1	QT-PFT-VWT
ELECTRICAL RESISTANCE TEST (ERT)	2.05.C.2	QT-PFT-ERT
ELECTRIACAL IMPEDANCE TEST (EIT)	2.05.C.3	QT-PFT-EIT
DYNAMIC TO STATIC STIFFNESS RATIO TEST (DSSRT)	2.05.D.1	QT-PFT-DSSRT

FIGURE 1B

PRODUCTION TESTS (PT)

STATIC TESTS (ST)	**ARTICLE**	**TEST NAME/ABBR.**
VERTICAL LOAD TEST (VLT)	2.05.B.1	PT-ST-VLT
LATERAL LOAD TEST (LLT)	2.05.B.2	PT-ST-LLT
LONGITUDINAL RESTRAINT TEST (LORT)	2.05.B.3	PT-ST-LORT
ELECTRICAL TESTS (ET)	**ARTICLE**	
VOLTAGE WITHSTAND TEST (VWT)	2.05.C.1	PT-ET-VWT
ELECTRICAL RESISTANCE TEST (ERT)	2.05.C.2	PT-ET-ERT
ELECTRIC IMPEDANCE TEST (EIT)	2.05.C.3	PT-ET-EIT
DYNAMIC TESTS (DT)	**ARTICLE**	
DYNAMIC TO STATIC STIFFNESS RATIO TEST (DSSRT)	2.05.D.1	PT-DT-DSSRT
VERTICAL AND LATERAL REPEATED LOAD TEST (VLRLT)	2.05.D.2	PT-DT-VLRLT
POST-FATIGUE TESTS (PFT)	**ARTICLE**	
VERTICAL LOAD TEST (VLT)	2.05.B.1	PT-PFT-VLT
LATERAL LOAD TEST (LLT)	2.05.B.2	PT-PFT-LLT
LONGITUDINAL RESTRAINT TEST (LORT)	2.05.D.6	PT-PFT-LORT
VOLTAGE WITHSTAND TEST (VWT)	2.05.C.1	PT-PFT-VWT
ELECTRICAL RESISTANCE TEST (ERT)	2.05.C.2	PT-PFT-ERT
ELECTRIACAL IMPEDANCE TEST (EIT)	2.05.C.3	PT-PFT-EIT
DYNAMIC TO STATIC STIFFNESS RATIO TEST (DSSRT)	2.05.D.1	PT-PFT-DSSRT

FIGURE 2

VERTICAL DEFLECTION LIMITS

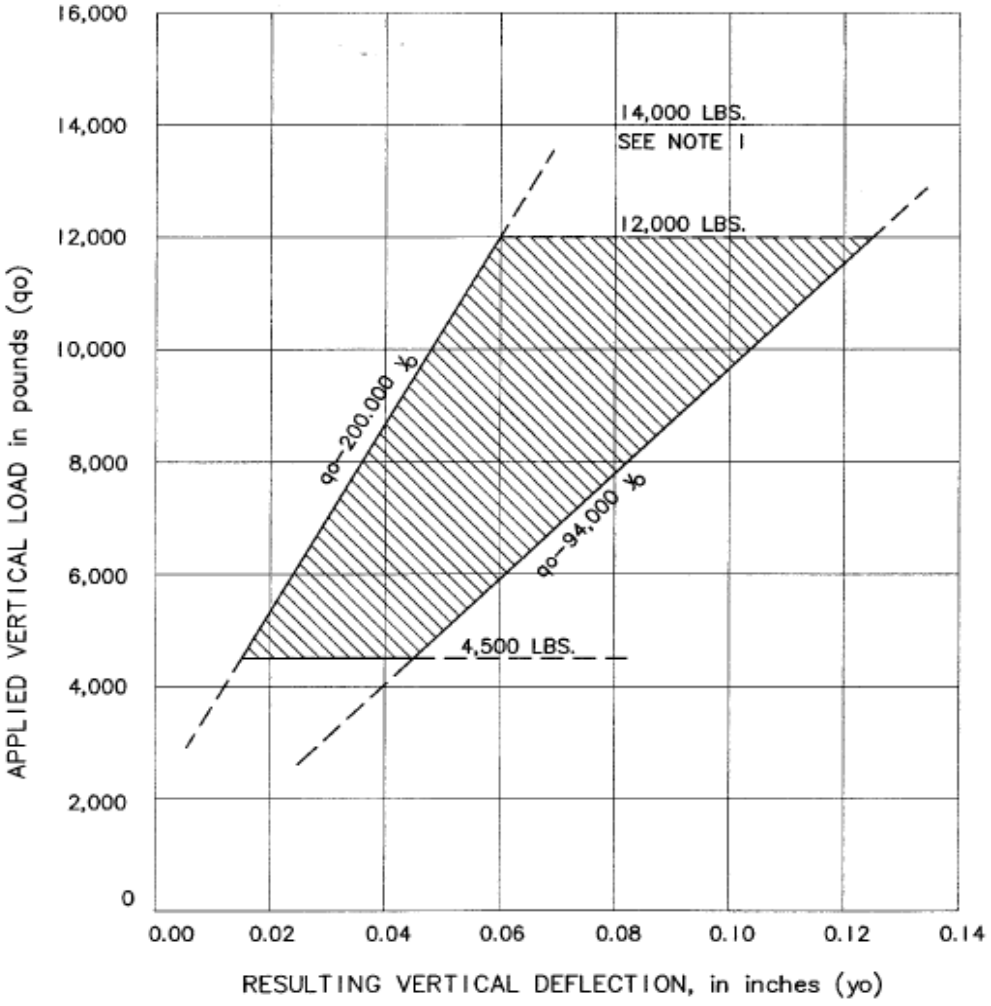

NOTES:

1. MAXIMUM DEFLECTION AT 14,000 LBS. SHALL NOT EXCEED 25% OF THE UNCOMPRESSED THICKNESS OF ELASTOMER PAD.

2. FASTENER SPRING RATE MUST BE BETWEEN 94,000 LBS./IN. AND 200,000 LBS./IN. FOR ALL LOADS BETWEEN 4,500 LBS. AND 12,000 LBS.

SECTION 34 11 36.13 – FIGURE 3

LONGITUDINAL RESTRAINT LIMITS

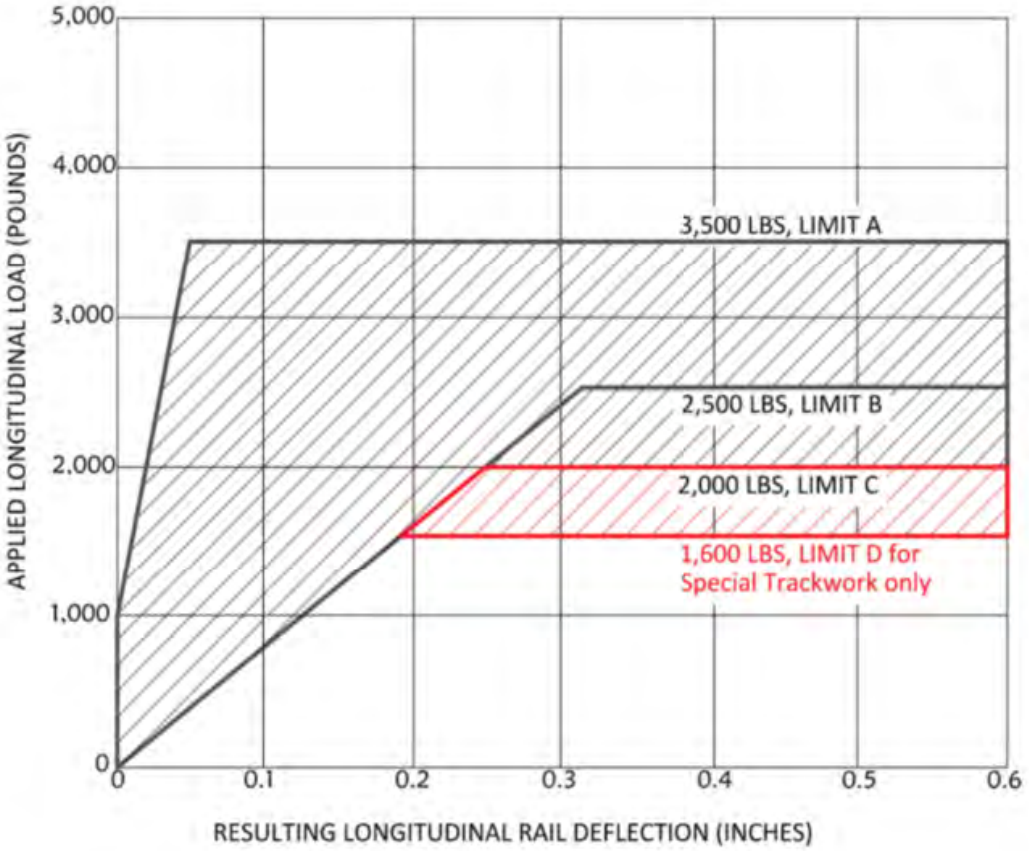

END OF FIGURES

SECTION 34 11 36.14

HIGH-RESILIENT DIRECT FIXATION FASTENERS

PART 1 - GENERAL

1.01 SUMMARY

A. Section includes:

1. Requirements for furnishing all labor, materials, and equipment for manufacturing, testing, fabricating, and delivering of all high-resilient (HR) direct fixation fasteners including standard and with restraining rail.

B. This Section shall serve as a performance specification for the HR direction fixation fasteners.

C. Utilize one basic HR direct fixation fastener assembly for standard rail fasteners, and one basic HR direct fixation fastener assembly for restraining rail fasteners and comply with the configuration and requirements in the Contract Documents.

1.02 REFERENCES

A. This Section incorporates by reference the latest revision of the following documents:

1. American Railway Engineering and Maintenance-of-Way Association (AREMA):

a. AREMA Manual for Railway Engineering (AREMA Manual).

2. American Institute of Steel Construction (AISC):

a. AISC Steel Construction Manual.

3. ASTM International (ASTM):

a. ASTM A148/A148M Standard Specification for Steel Castings, High Strength, for Structural Purposes.

b. ASTM A536 Standard Specification for Ductile Iron Castings.

c. ASTM A730 Standard Specification for Forgings, Carbon, and Alloy Steel, for Railway Use.

d. ASTM D257 Standard Test Methods for DC Resistance or Conductance of Insulating Materials.

e. ASTM D395 Standard Test Methods for Rubber Property - Compression Set.

f. ASTM D412 Standard Test Methods for Vulcanized Rubber and Thermoplastic Elastomers-Tension.

g. ASTM D429 Standard Test Methods for Rubber Property - Adhesion to Rigid Substrates.

h. ASTM D471 Standard Test Method for Rubber Property - Effect of Liquids.

i. ASTM D573 Standard Test Method for Rubber - Deterioration in an Air Oven.

j. ASTM D1149 Standard Test Methods for Rubber Deterioration - Cracking in an Ozone Controlled Environment.

k. ASTM D1229 Standard Test Method for Rubber Property - Compression Set at Low Temperatures.

l. ASTM D2240 Standard Test Method for Rubber Property - Durometer Hardness.

m. ASTM E162 Standard Test Method for Surface Flammability of Materials Using a Radiant Heat Energy Source.

n. ASTM E662 Standard Test Method for Specific Optical Density of Smoke Generated by Solid Materials.

o. ASTM F3125/F3125M Standard Specification for High Strength Structural Bolts, Steel and Alloy Steel, Heat Treated, 120 ksi (830 MPa) and 150 ksi (1040 MPa) Minimum Tensile Strength, Inch and Metric Dimensions.

p. ASTM G101 Standard Guide for Estimating the Atmospheric Corrosion Resistance of Low-Alloy Steels.

4. The Society for Protective Coatings (SSPC):

a. SSPC SP 5 White Metal Blast Cleaning.

1.03 SUBMITTALS

A. Submit:

1. Technical Data: Include shop drawings for each type of fasteners and all information including details showing dimensions, arrangement, and material description for each component in fastener assembly.

2. Product Data: Product data, catalog cuts, drawings, material specifications, and installation instructions for each component in the fastener assembly and furnished products.

3. Quality Control Program:

a. A detailed narrative describing procedures to be utilized for the Work and a description of the organization to be used on the Contract.

4. Qualification Statement: Documentation pertaining to fasteners' conformance to the requirements as specified. Document shall include Contractor's certification that furnished products meet specified requirements.

5. Spare Parts:

a. Provide ten (10) spare HR direct fixation assemblies, including clips, insulators, plates, and anchor inserts as spares.

B. Transmit:

1. Samples:

a. Furnish two (2) identical samples of the HR direct fixation fastener.

b. Label each sample indicating:

1) Contract Name and Number.

2) Name of Contractor and Subcontractor.

3) Material or equipment represented.

4) Name of manufacturer and brand.

5) Reference specifications section and article numbers.

2. Certifications:

a. Rail clip Supplier's approval of rail hold-down spring clip application on proposed HR direct fixation fastener.

b. Certification of each elastomer batch used.

3. Threaded element installation data.

4. HR Direct Fixation Fastener Testing: Provide test results documentation as required for the Work.

1.04 QUALITY ASSURANCE

A. Develop and maintain a quality control program regulating methods, procedures, and processes to comply with standards of quality.

B. Keep complete records of inspection work by the Contractor .

C. Tolerances:

1. Fabrication Tolerances:

a. Length and Width: Plus or minus 1/16-inch.

b. Thickness: Plus or minus 0.03-inch.

c. Squareness: Plus or minus 1-degree (in a 360-degree circle).

d. Centering of holes: Plus or minus 1/32-inch.

e. Diameter of holes: Plus or minus 1/16-inch.

f. Rail seat flatness: Plus or minus 1/32-inch.

1.05 DELIVERY, STORAGE, AND HANDLING

A. Fasteners shall be packed and shipped in a manner that shall prevent a load on any fastener from exceeding 1,000 pounds.

B. Fasteners shall not be stored by the Contractor in a wet location or where the ambient temperature will exceed 120 degrees Fahrenheit.

C. Fasteners and assemblies shall be packaged to permit outdoor storage.

D. Fastener bodies shall be palletized and banded. Rail hold-down assemblies, shoulders, bolts, nuts, and other loose items shall be packaged by component type in secure shipping kegs, boxes, or bags. All items shall be clearly identified as to the contents.

E. Damage: Replace fasteners and assemblies damaged during packaging, shipping, storage, and handling. Special care shall be taken to protect the threaded lengths of bolts to prevent damage.

PART 2 - PRODUCTS

2.01 PERFORMANCE REQUIREMENTS

A. The spring rate for HR direct fixation fasteners of 115 RE rail shall be between 40,800 pounds per inch and 61,200 pounds per inch for vertical loads between 2,000 pounds and 10,000 pounds.

B. HR direct fixation fastener shall have a longitudinal restraint between 1,800 and 3,000 pounds per rail seat.

C. Special trackwork HR direct fixation fastener for 115 RE rail with longitudinal restraint between 1,600 and 3,000 pounds per rail seat.

D. Restraining rail HR direct fixation fastener with longitudinal restraint between 1,800 and 3,000 pounds per rail seat. Fastener shall be able to accommodate a restraining rail bolted to the running rail.

E. HR direct fixation fasteners shall be designed to provide vibration isolation in three axis and be suited for installation with minimal changes to the proposed track construction.

F. Electrical Isolation:

1. The fastener shall provide an electrical surface leakage distance not less than 1 3/4-inches measured from the grounded portion of the fastener to the charged portion by the most direct path that does not pass through an insulating material, and not less than 1/4-inch when measured passing through an insulating material.

2. The insulation requirements shall be met within the body of the fastener. No separate or detachable insulating components such as rail base pads or spring clip insulators shall be used.

3. No surface cut-outs, gaps, edge voids, or edge cut-outs will be allowed that could allow accumulation of dirt, metallic particles, or other material that could provide electrical leakage to ground.

4. Each fastener shall be furnished with a High Density Polyethylene shim.

2.02 PRODUCTS

A. Manufacturers:

1. HR direct fixation fasteners manufactures are required to have five years of direct fixation fastener in-service performance history.

B. Manufactured Products:

1. HR Direct Fixation Fastener:

a. Types of HR Direct Fixation Fastener:

1) Standard rail fastener, with or without cant.

2) Restraining rail fastener, with or without cant.

3) Special trackwork fasteners.

2. Fastener Shims:

a. Shape, size, and configuration of shims: Conform to the overall configuration of the HR direct fixation fastener with 1/2-inch extending beyond the fastener on all sides.

b. Shims shall be designed so that they can be simply installed and removed. Installation or removal shall not require the removal of the fastener body. The design shall incorporate a positive means of preventing the shims from displacement under operating conditions.

c. Shims shall be fabricated from black high density polyethylene (HDPE) and have matte finish on both sides.

3. Anchor Insert Assembly:

a. Anchor Bolts and Other Threaded Elements:

1) Threaded elements shall be high strength steel conforming to the chemical and mechanical requirements of ASTM F3125/F3125M, or ASTM A536 (ductile Iron, Grade 65-45-12, and having Class 2A and 2B thread fit. Thread length can vary from that specified for structural bolts.

2) Anchor bolts: 7/8-inch diameter, of sufficient length to provide a minimum of 2-inches of insert thread engagement with maximum 1/2-inch of vertical shims under the HR direct fixation fastener.

3) Threaded elements in the fastener shall include a positive means of preventing the loosening of the element due to in-service vibrations.

4) Anchor bolts shall not pre-compress the elastomer in the installed position.

5) Threaded element installation data shall include, but not be limited to, the bolt torque range in foot-pounds. The torque range shall provide the minimum tension as specified by the AISC Steel Construction Manual.

6) Bolts shall be coated with a water-resistant coating as thread protection against rusting prior to installation.

7) Washers used with anchor insert assemblies shall be galvanized.

b. Anchor Inserts:

1) The anchor inserts shall, as a minimum, conform to ASTM F3125/F3125M, or ASTM A536 (ductile iron, Grade 65-45-12), and shall have a Class 2B thread fit.

2) As part of the insert, there shall be a feature to prevent rotation of the insert after the concrete has reached its design strength.

3) Type I anchor insert shall have a minimum length of 4-1/2-inches and a maximum length of 5-1/2-inches allowing for a minimum 3-inch engaging threaded length.

4) Type II anchor inserts shall have a minimum length of 3-1/2-inches and a maximum length of 4-1/2 inches and a minimum 2-inch engaging thread length.

5) In the installed position, the top of the anchor insert shall provide a flat surface parallel to the rail base with a minimum of 1/8-inch bearing width surrounding the anchor bolt hole.

6) Furnished with an installed plug of metal or plastic material to preclude the entrapment of moisture, concrete, or other foreign materials.

a) Plug: Removal by socket or other common device and capable of reinsertion, and if reinserted, still preclude concrete and other foreign materials from entry.

c. Anchor Insert Coating on Exterior Surfaces:

1) 100 percent dry powder epoxy resin such as Scotch Kote Brand Protective Resin No. 203, manufactured by Suppliers: the Minnesota Mining and Manufacturing Company (3M), Corvel Epoxy ECB-1363A, manufactured by the Polymer Corporation, or approved equal.

2) Before coating, the insert shall be degreased and cleaned to white metal in accordance with SSPC SP 5.

3) Apply coating in accordance with the coating Supplier's recommendations and the following general requirements, or an approved equal:

a) No thinner than 10 mils or thicker than 20 mils.

b) No runs, sags, or chips.

c) Thickness by a magnetic millimeters gauge at not less than two locations of the insert.

d) Tested in accordance with ASTM D2440, hardness not less than 85 or more than 90 Shore D.

e) Test coated insert for pin holes and breaks in a weak electrolytic solution:

i) Immerse the coated insert in a weak electrolytic solution to within 1/4-inch of the top surface of inserts and contact a positive electrode with the non-coated, threaded, internal area of the insert. Place negative lead in the solution.

ii) Electrolytic solution: potable water with resistivity maintained to within 1,000 to 1,500 ohm-cm.

iii) Apply a 100-volt DC electrical current between the electrolyte and the insert.

iv) Perform the testing at the frequency required in the sequential statistical quality control plan developed by the epoxy coating applicator.

v) Coating Acceptance Criteria: Circuit not closed when the insert is immersed in the electrolytic solution.

vi) Average defective rate: Not more than 2 percent.

vii) Maximum defective rate: Not more than 5 percent.

viii) Demonstrate defective rates at a 90 percent degree of confidence.

4. Rail Fastening Spring Clips:

a. Spring clips shall be right-hand configuration.

b. Lateral rail position adjustment by the hold down assembly shall not be permitted.

c. Design shall not be dependent upon elastomer components in torsion.

d. Installed into a fixed shoulder, integral to the fastener top plate.

e. Installed without the use of threaded elements.

f. No part of the clip shall protrude below the base of rail.

g. The clip shall not have point contact. The clip shall be such that lateral rail movements within the confines of the shoulders will not produce transverse denting, carving, or scoring of the rail base. The clip shall be such that longitudinal rail slippage will not produce overstressing, ending, twisting, or other damage to the clips, and will not damage the rail.

h. Design not to permit rail hold-down assembly or the means of preventing lateral movement of the rail to make point contact against the rail. If contact is made in the static or dynamic state, allow no less than 0.125-inch in dimension and no less than 0.15 square inches in area.

2.03 MATERIALS

A. Metal Components:

1. Metal plate components shall be made from forged, cast steel or ductile iron.

a. Cast steel shall be ASTM A148/A148M, Grade 80-40 or equal.

b. Forged steel shall be ASTM A730, Grade C or equal.

c. Ductile iron shall be ASTM A536, Grade 65-45-12 or equal.

2. A Corrosion Resistance Index: 4.0 minimum, calculated for rolled steel products and other steel with a chemical content within the composition range listed in ASTM G101 and containing less than 1.0 percent manganese.

B. Elastomer:

1. Fabricated of 51 percent minimum natural rubber.

2. The design Durometer Shore A shall be 50 plus 10 for natural rubber as measured in accordance with ASTM D2240.

3. Compressive strain of the elastomer: No more than 25 percent of its uncompressed thickness for a load of 14,000 pounds, applied vertically to the rail to a single fully assembled fastener. Include pre-compression of elastomer in fasteners in the installed position in determining the total compressive strain.

4. Elastomeric component of the HR direct fixation fastener shall be fully vulcanize bonded to its frame and top plate and not less than 1/2-inch thick. The fastener shall also include bonded elastomer on its top surface to a plate.

5. Water Absorption: ASTM D471:

    a. Test Conditions: In accordance with ASTM D471.

    b. Acceptance Criteria: Water absorption after 24 hours immersion shall not exceed 0.5 percent by change in volume.

6. Tensile Properties: ASTM D412:

    a. Natural Rubber - Tensile Strength: Minimum 2,500 pounds per square inch.

    b. Ultimate Elongation: Minimum 350 percent.

7. Resistance to Compression Set: ASTM D395, Method B:

    a. Test Condition: Natural Rubber, 22 hours at 158 degrees Fahrenheit.

    b. Natural Rubber: Maximum 25 percent.

8. Resistance to Aging in Air: ASTM D573:

    a. Test Condition: 72 hours at 158 degrees Fahrenheit.

    b. Natural Rubber - Retention of Tensile Strength: Minimum 75 percent.

    c. Retention of Ultimate Elongation: Minimum 75 percent.

    d. Change in Hardness: Maximum 10 points Durometer Shore A.

9. Resistance to Ozone Cracking: ASTM D1149:

    a. Test Condition: Specimens prepared in accordance with Procedure A of ASTM D1149 shall be tested in accordance with ASTM D1149 at a temperature of 104 degrees Fahrenheit and an ozone concentration of 50 parts per hundred million (pphm).

    b. Acceptance Criteria: Exhibit no cracking when examined in accordance with ASTM D1149 at the end of a 100 hour exposure.

10. Adhesion to Metal: ASTM D429, Method B:

    a. Test Condition: Test specimen shall duplicate actual HR direct fixation fastener fabrication in respect to type of steel, preparation of steel, bonding agents, and elastomer.

    b. Acceptance Criteria: The failure of the elastomer shall be type R failure, i.e., elastomer tears before bond fails.

11. Resistance to Oil: ASTM D471:

a. Test Condition: 70 hours at 74 degrees Fahrenheit in ASTM No. 1 oil.

b. Acceptance Criteria: Volume change shall not exceed minus 10 percent or plus 20 percent.

12. Low Temperature Compression Set: ASTM D1229:

a. Test Condition: 70 hours at 14 degrees Fahrenheit.

b. Acceptance Criteria: The compression at 30 minutes after release (t_{30} reading) shall not exceed 65 percent.

13. Flame Spread and Smoke Generation: ASTM E162 and ASTM E662:

a. Test Condition: Determine flame propagation index (Is) and smoke generation specific optical index (Ds) for flaming and non-flaming modes.

b. Acceptance Criteria: No flaming drippings when tested. No acceptance criteria are specified for the flame propagation index (Is) and smoke generation specific optical index (Ds).

14. Volume resistivity: ASTM D257:

a. Test Condition: Apply 1500 volts DC (minimum) for 3 minutes, and measure volume resistivity in accordance with ASTM D257.

b. Acceptance Criteria: The volume resistivity shall be at least 1×10^{12} ohm-centimeters dry as molded and at least 1×10^{11} ohm-centimeters after 24 hours immersion as determined below.

2.04 FABRICATION

A. HR Fastener:

1. The HR direct fixation fastener shall be for 115 RE rail, with spring clips in the right-hand configuration.

2. Provide, on both sides of the rail base, a positive means of preventing more than 1/8-inch total lateral movement of the rail base relative to the shoulders in case of failure or loosening of one or both spring clips.

3. The lateral rail restraint shall extend a minimum of 3/8-inch vertically, but not higher than 1-3/4-inches above the base of rail in the installed position.

4. All HR direct fixation fastener shall utilize a spring clip type element with non-threaded components to form the rail hold down assembly, fasteners shall utilize the Pandrol PR 601A or approved equal.

5. The assembled direct fixation fasteners shall provide a canted rail seat to provide a 40 to 1 rail cant when mounted to a flat, level surface. Assembled direct fixation fasteners tapered rail seat shall be towards the centerline of the track.

6. Two anchorage insert assemblies per fastener, for securing the direct fastener to the plinth concrete.

7. HR direct fixation fasteners shall be composed of as few components as is economically and technically practicable for ease of assembly, disassembly, and maintenance, and shall be designed to permit installation and replacement of the entire assembly or its components by one worker using standard conventional hand tools.

8. HR direct fixation fastener shall be designed to dampen lateral and vertical dynamic forces transferred to anchor bolts.

9. In its installed position, the underside of the fastener shall be a flat plane. Base protrusions into the plinth concrete will not be allowed.

10. Bonding of the HR direct fixation fastener to the plinth concrete shall not be permitted.

11. Fastener plates shall have full bearing on the elastomer in positions of lateral adjustment and have a means of preventing displacement of the elastomer.

12. Stability of the fastener shall not be dependent solely upon the strength of bonding of the elastomer to metal.

13. Provide fastener that when the spring clips are removed, the rail can be lifted vertically until it is completely free of the fastening shoulder without disturbing the horizontal or vertical alignment of the shoulder or the adjacent restraining rail bracket.

14. Dimensional and Shape Requirements:

    a. The fastener shall be rectangular or elliptical in shape. The frame and top plate shall include keyed and/or turned up plate edges such that loss of elastomer bond shall not result in complete loss of the fasteners ability to hold line and gauge. The fastener shall be designed to shed water without leaving pools.

    b. Height:

        1) The overall distance between the top surface of the plinth concrete and the base of the rail with the HR direct fixation fastener in the installed position shall be between 1-7/8-inches and 2-7/8-inches, exclusive of shims.

        2) No part of the HR direct fixation fastener shall project more than 3-1/2-inches above the rail base in the installed position.

    c. Length and Width:

        1) Fastener body dimensions including elastomer:

            a) Length: Measured perpendicular to the rail centerline, shall be between 13-1/2-inches and 17-1/2-inches.

            b) Width: Measured parallel to the rail centerline, shall be between 6-1/2-inches and 9–inches.

            c) Or conform to the length and width for standard direct fixation fasteners.

        2) No portion of the fastener in the installed position shall extend more than 9-inches toward the field side from the centerline of the running rail.

    d. Special trackwork fastener length and width:

        1) Fastener body dimension including elastomer:

            a) Length: Measured perpendicular to the rail centerline.

b) Width: Measure parallel to the rail centerline.

e. Adjustment Requirements:

1) Lateral Adjustment:

a) Plus or minus 1/2-inch, minimum, provided at the anchor bolts.

b) Do not use friction as a means of preventing lateral movement.

c) If lateral adjustment employs serrations on any component:

i) Engage at least three serrations at interface.

ii) Engage at least 3-inches of serration per fastener.

iii) Machine or cast serrations to a minimum depth of 1/16-inch.

iv) The minimum increment of lateral adjustment through serrated steel plates shall be 1/16-inches.

d) Each rail fastener requires components for specified increments of lateral adjustment. Components of the direct fixation fastener shall not be replaced or added to the basic configuration to laterally adjust the rail.

e) Provide 1/32-inch of lateral clearance between the rail seat and the rail for each direct fixation fastener.

2.05 SOURCE QUALITY CONTROL

A. High-Resilient Direct Fixation Fastener Testing: Qualification and production tests for each rail fastener are required. Comply with the following procedures for both qualification and production testing. Perform tests as shown in Figure 1A for qualification testing and in Figure 1B for production testing:

1. Qualification Testing: At the Contractor's expense. Prior to production, select for testing two (2) of each type of HR direct fixation fasteners. Test each fastener as specified in Figure 1A. If any of the fasteners fail to meet the test requirements, test two additional fasteners. In the event either of the two (2) additional fasteners fail, re-design the fastener, submit new Technical Data, and start the qualification test sequence over.

2. Production Testing: At the Contractor's expense. Select for testing two (2) HR direct fixation fasteners from each 1,000 production lot fasteners. Test each fastener as specified in Figure 1B. If any of the fasteners fail to meet the test requirements, test two (2) additional fasteners of the same type from the production lot. In the event either of the two (2) additional fasteners fails, the entire lot shall be rejected or tested and only those successfully passing all tests shall be incorporated in the finished work.

3. Not less than fifteen (15) days prior to each fastener shipments, certified statements for each elastomer batch used in the manufacture of the fasteners

being delivered shall be submitted to document compliance of each elastomer batch with the requirements.

4. In addition to the qualification and production tests, components of the fasteners shall be subject to full or partial testing for compliance with the Contract Documents.

5. Qualification and production testing can be performed at any testing facility in North America, including facilities at the Contractor's plant. Testing equipment shall be in good repair, of adequate capacity, and shall be verified or calibrated against certified standards that have a known traceable relationship to the National Research Council or the National Institute of Standards and Technology.

6. Previous Qualification testing reports can be submitted to the Resident Engineer. Provided these reports are for an appropriate product with five (5) years of in-service history and past acceptable test results for Sound Transit, Qualification testing may be waived. Production testing must be performed in all cases.

B. Static Tests: Perform each test listed below on two (2) specimens. For loads that are to be applied at the centerline of fastener, the manufacturer has the option to double the applicable loads and apply at the longitudinal midpoint between rail seats for testing purposes:

1. Vertical Load Test:

a. Procedure: Apply a vertical load increasing in increments of 1,000 pounds to a maximum load of 13,000 pounds at a rate not less than 500 pounds per minute and not more than 2,000 pounds per minute. Loads shall be applied downward at the center of the rail head at the centerline of the fastener normal to the rail. For each increment of load, measure the vertical deflection of the rail head to the nearest 0.001-inch. Remove the load and measure and record the final position of the rail head. Plot the recorded values for vertical loads versus deflection on a graph, as shown in Figure 2. Pre-cycle the fasteners by loading from 0 to 13,000 pounds two (2) times prior to measuring deflections.

b. Test Acceptance Criteria:

1) The load versus deflection curve shall lie within the envelope shown in Figure 2 for loads in the range from 2,000 pounds to 10,000 pounds.

2) The spring rate of the fastener (slope of the load-deflection curve) shall not be less than 40,800 pounds per inch or more than 61,200 pounds per inch for loads between 2,000 pounds and 10,000 pounds:

a) Calculate the spring rate by applying the least-squares linear regression method to the recorded data to obtain a straight line load-deflection relationship.

b) Each recorded deflection shall be within 10 percent of the deflection calculated from the straight-line relationship over the loading range, from 2,000 pounds to 10,000 pounds.

c) After removal of the maximum load, the fastener shall return to within 0.005-inch of its original position within 1 minute.

3) At no time during the test shall any fastener component exhibit any sign of failure by slippage, yielding, or fracture. Slippage is defined to mean any movement of the fastener components relative to the initial position not attributed to deflection or yielding. The deflection measured at 10,000 pounds divided by the design thickness of the elastomer component shall be used to establish the fastener's compliance with the requirement for a maximum vertical deflection not to exceed 25 percent of the elastomer thickness. The values obtained when this test is repeated on all fasteners shall be within 20 percent of the initial test values.

2. Lateral Load Test:

a. Procedure: While applying a vertical load of 13,000 pounds downward, offset 3/4-inch from the center of the rail head towards the gauge side at the centerline of the fastener normal to the rail, apply a lateral load horizontally to the rail at a point 3-inches above the base of rail along the centerline of each fastener normal to the rail. Apply a lateral load horizontally to the rail head at a point 0.625-inch below the top of the rail along the centerline of the fastener in a direction normal to the rail. Increase the load in increments of 1,000 pounds to a maximum load of 8,000 pounds, at a rate of not less than 500 pounds per minute and not more than 1,500 pounds per minute. For each load increment, measure the lateral deflection of the rail head at a point 0.625-inch below the top of the rail to the nearest 0.001-inch and record.

b. Remove the lateral load and measure and record the final position of the rail head. Plot the recorded values for lateral loads versus deflection on a graph similar to Figure 2.

c. Test Acceptance Criteria:

1) The lateral deflection of the rail head for a lateral load of 4,000 pounds shall not exceed 0.15-inch.

2) The lateral deflection due to the maximum load: shall not exceed 0.37-inch.

3) Difference between the original and final positions of the rail head shall not exceed 0.062-inch.

4) No fastener component at any time during the test shall exhibit any sign of failure by slippage, yielding, or fracture.

3. Longitudinal Restraint Test:

a. Procedure: Support the rail end on a roller or other low friction support properly elevated to prevent the longitudinal load from binding the rail in the fastener. Apply load longitudinally to the rail at its base increasing in increments of 500 pounds to a maximum load of 8,000 pounds or until the rail is 2-inches from the initial position at a rate not less than 500 pounds per minute and not more than 1,500 pounds per minute. Each load increment shall be maintained until the longitudinal movement of the rail stops before increasing the load to the next increment. For each load, measure the longitudinal movement of the rail in relation to the top plate of the HR direct fixation fastener to the nearest 0.01-inch and record. Remove the longitudinal load at slippage, measure and record the final position of the rail in relation to the top plate of the HR direct fixation fastener. Measure and record the load applied at slippage for use in the

Push-Pull Test, as specified. Plot the recorded values for longitudinal load versus movement on a graph as shown in Figure 3 and identify it as “Initial Test.” Without altering test set-up, the load shall then be applied to the opposite end of the test rail and the test re-run it its entirety. Plot the recorded values for longitudinal load versus movement on a graph as shown in Figure 3 and identify it as “Reverse Test.”

b. Test Acceptance Criteria:

1) Longitudinal load versus deflection curve, when plotted on Figure 3: entirely within the limits defined by limit lines A and B. At least 85 percent of test results shall fall within limits A and B for HR direct fixation fasteners and A and C for special trackwork HR direct fixation fasteners.

2) Difference between the original (before initial test) and final (after reverse test) position of the rail: not to exceed the total rail slippage plus 0.24-inch.

3) No fastener component at any time during the test shall exhibit any sign of failure by slippage, yielding, or fracture, except for any slippage that occurs between the rail hold-down assembly and the rail.

4) Rail hold-down assembly longitudinal restraint: constant, uniform and unbroken curve which falls within the envelope shown in Figure 4 when plotted.

4. Lateral Restraint Test:

a. Procedure: Apply two (2) lateral loads, each increasing simultaneously in increments of 500 pounds to a maximum load of 2,500 pounds at the base of the rail, in the same direction, normal to the centerline of the rail and symmetrically on each side of the fastener centerline. Measure the lateral deflection of the rail at the intersection of the centerline of the fastener and the gage line of the rail to the nearest 0.001-inch and record after each increment of loading.

b. Test Acceptance Criteria:

1) No fastener component at any time during the test shall exhibit any sign of failure by slippage, yielding, or fracture.

2) Difference between the original and final positions of the gage line: not to exceed 0.062-inch.

3) Lateral deflection of the rail, when fully loaded, shall be between 0.03-inch and 0.125-inch from the original gage line of the rail.

5. Vertical Uplift Test:

a. Procedure: Apply and secure a vertical load to the center of the rail head at the centerline of the fastener in a direction normal to the rail, alternating continually from a vertical downward load to a vertical upward load. Increase the upper and lower peaks per cycle in increments of 200 pounds to a maximum of 3,600 pounds downward and upward. Continually measure the loads and deflections to the nearest 0.001-inch and immediately record on a load-versus-time graph and deflection-versus-time graph, respectively. Remove the load and measure and record the

final position of the rail head. Apply the reaction force to the uplift load by only securing the test block on which the fastener is mounted.

b. Test Acceptance Criteria:

1) Vertical deflection of the fastener for lifting load of 2,000 pounds within 105 percent to 205 percent of the deflection for a 2,000 pound downward vertical load as determined from the vertical load test.

2) When the vertical load is continuously varied from vertical downward loads to vertical uplift loads, the load-deflection curve shall be continuous and there shall be no other indication of backlash or freeplay at times when the load or the deflection changes direction.

3) After removal of the maximum load, the rail shall immediately return to within 0.005-inch of its original position within 1 minute.

4) No fastener components including the fastener anchor insert to the test block at any time during the test shall exhibit any sign of failure by slippage, yielding, or fracture.

C. Electrical Tests: Perform each test listed below on two (2) specimens:

1. Voltage Withstand Test:

a. Procedure: A complete, fully assembled fastener, configured as specified, shall have a ground plate placed below the elastomer. A DC potential of a minimum of 10 kilovolts shall be applied to the rail head for 1 minute. In the event of breakdown, record the breakdown voltage.

b. Test Acceptance Criteria: The elastomer shall complete this test with no visible damage such as splits, cracks, pinholes, or fractures. Perform all other electrical tests on the fastener.

2. Electrical Resistance Test:

a. Procedure: Test a complete, fully assembled fastener for electrical resistance. Before assembly, metal parts, anchor inserts, spring clips, elastomer surfaces, and ancillary parts associated with the fastener shall be clean and dry. Assemble the fastener with a section of 115 pound RE rail, not less than 1-foot in length. Mount the test fastener on a 1/4-inch thick metallic ground plate sized to extend 1/2-inch beyond all edges of the fastener. Use anchor insert assemblies supplied, or similar to that for use in actual field installation, to mount the fastener to the ground plate. Use the same number of bolts (or other devices) that will be used to anchor the fastener in-service. Verify that all parts that is in electrical contact do not exhibit excessive contact resistance because of improper assembly or other causes. This shall apply, but not necessarily be limited to:

1) Rail to rail plate interface.

2) Rail hold-down assembly (clip) and rail.

3) Anchor bolts and bottom fastener plate (if present).

4) Anchor bolts and ground plate.

b. Dry conditions: 24 hours prior to testing, store the assembled fastener(s) in a clean, dry environment with ambient conditions of 60 degrees Fahrenheit to 80 degrees Fahrenheit and 50 to 70 percent relative humidity. Apply 100 volts (minimum) dc between the rail head and the ground plate for 3 minutes. Measure the applied voltage and resulting current flow, or directly measure the resistance with an accuracy flow, or directly measure the resistance with an accuracy of plus or minus 2 percent. Instrumentation used for direct measurement shall have a minimum 100 volt output capacity.

c. Wet conditions: Perform this test on the same fastener(s) that passed the dry electrical resistance tests. Place the assembled fastener in a nonmetallic trough or other suitable container. Size the container such that there is a minimum of 2-inches between the sides and bottom of the fastener/ground plate assembly and the sides and bottom of the container. In the event more than one (1) fastener is placed in the same container, maintain a 2-inch clearance between the edges of the ground plates on adjacent fasteners and the clearances cited above. Pour water into the container to a level midway up the rail web covering all surfaces of the fastener. Maintain this level of immersion for minimum of 10 minutes. Ambient temperature of fastener surfaces (prior to immersion), water, and air shall be 60 to 80 degrees Fahrenheit. Relative humidity shall be 50 to 70 percent. Water resistivity shall be 1,000 to 1,500 ohm-cm (use potable water and adjust resistivity by addition of sodium chloride). Drain the water from the container to a level 1/2-inch below the ground plate. Without drying or creating a condition that causes the fastener surfaces to dry, measure the resistance within two (2) minutes after draining as follows:

1) Apply 100 volts between the rail head and the ground plate for 15 seconds.

2) Measure the applied voltage and resulting current flow with an accuracy of plus or minus 2 percent. Calculate the DC wet resistance, or directly measure the resistance with an accuracy of plus or minus 2 percent. Instrumentation used for direct measurement shall have a minimum 100 volt measuring capability.

3) Repeat the resistance measurement every 5 minutes for the first hour, every 10 minutes for the second hour, and every 15 minutes thereafter to establish the wet resistance versus time characteristics of the fastener. Perform tests for at least 2 hours after draining. The tests can be terminated after the first 2-hour test period if any three (3) consecutive measurements are at least 800,000 ohms or after another 2-hour test period, whichever comes first.

d. Test Acceptance Criteria:

1) Dry conditions: The minimum DC resistance shall be 10 megohms.

2) Wet conditions: A minimum resistance of 800,000 ohms for the average of three (3) consecutive readings.

3. Electrical Impedance Tests:

a. Procedure: Test one (1) complete, fully assembled fastener for electrical impedance. Apply a potential of 50 volts AC RMS to the rail head for 3

minutes for each increment of measurement for frequencies from 10 hertz to 10 kilohertz in increments of 20 hertz up to 100 hertz, 200 hertz up to 1,000 hertz, and 2,000 hertz up to 10 kilohertz. Measure the impedance after 3 minutes with an accuracy of plus or minus 2 percent and record each frequency. Upon approval by the Resident Engineer, electrical resistance can be calculated by measuring current flow, and impedance can be calculated from the measurements of resistance and capacitance using the impedance equation which applies to a resistance and capacitance in parallel.

b. Test Acceptance Criteria: The minimum impedance for any frequency between 20 hertz and 10 kilohertz with 50 volts AC RMS shall be 10,000 ohms.

D. Dynamic Tests: Perform each test listed below on two (2) specimens. For loads that are to be applied at the centerline of fastener the manufacturer has the option to double the applicable loads and apply at the longitudinal midpoint between rail seats for testing purposes:

1. Dynamic to Static Stiffness Ratio Test:

a. Procedure: Apply vertical (compression) load to the rail head over the centerline of the fully assembled fastener. The load shall be of sinusoidal waveform over a range from 3,000 pounds to 7,000 pounds and shall be applied at a rate of 10 to 20 cycles per second. After a minimum of 1,000 cycles, measure and record the dynamic deflection of the fastener at 3,000 pounds and 7,000 pounds. Immediately after completing the dynamic deflection measurements, but only after the fastener deflection has stabilized, measure the static deflection at compression loads from 3,000 pounds to 7,000 pounds in 1,000 pound increments at a rate not exceeding 1,000 pounds per minute. Measure the deflections shall be measured within an accuracy of 0.001-inch.

b. Test Acceptance Criteria:

1) Dynamic stiffness: Calculated by dividing the difference between the recorded maximum and minimum load value (the dynamic load) by the difference between the recorded maximum and minimum deflection (the dynamic deflection).

2) The Static stiffness: Calculated by applying the least-squares linear regression method to the recorded data to obtain a straight line and determining the slope of the static load-deflection curve.

3) The ratio shall not exceed 1.35.

2. Vertical and Lateral Repeated Load Test:

a. Procedure: Apply loads to the rail head in such a manner as to produce a vertical downward load of 8,250 pounds, and lateral loads along the centerline of the fastener normal to the rail of 3,900 pounds to the gauge side of the rail head and 2,700 pounds to the field side of the rail head. Apply the vertical load to the rail head and the lateral loads shall be applied 3-inches above the base of rail along the centerline of each fastener normal to the rail. Alternate application of the lateral loads, each combined with alternating application and release of the vertical load, for a total of 3,000,000 complete cycles for qualification testing or a total of 500,000 cycles for production testing. Application of the field side load and vertical load and then the gauge side load and vertical load shall constitute one

cycle. The frequency shall be regulated to prevent the temperature of the components from exceeding 158 degrees Fahrenheit. Do not re-torque threaded elements subsequent to the completion of the initial 500,000 cycles of loading shall not be permitted.

b. Test Acceptance Criteria:

1) Withstand the 3,000,000 cycles for qualification testing or 500,000 cycles for production testing of load application with no evidence of failure.

2) Upon complete disassembly of the fastener and visual inspection, no fastener components shall exhibit any sign of failure by slippage, yielding, abrasion, or fracture.

3) No evidence of wear or grooving that would contribute to a failure of the rail.

4) Concrete test block at the anchor insert: no evidence of failure as a result of the dynamic test.

3. Anchor Bolt Repeat Load Test:

a. Procedure: After completion of the Vertical and Lateral Repeated Load Test, reassemble the fastener as specified using only the original components previously subjected to testing. With the gauge side anchor bolt loosened such that a minimum gap of 1/4-inch is between the underside of the bolt head and the anchor washer, repeat the Vertical and Lateral Repeated Load Tests for 15,000 cycles.

b. Test Acceptance Criteria:

1) Fastener: Withstand the 15,000 cycles of loading with no evidence of failure by slippage, yielding, or fracture.

2) Rail: No evidence of wear or grooving that would contribute to a failure of the rail.

4. Push-Pull Test:

a. Procedure: Apply a cycling longitudinal load as close to the base of the rail as possible to slip the rail plus and minus 3/4-inch from the initial position of the fastener and relative to the fastener position, for a total of 50 cycles.

b. Immediately following this portion of the test, apply a cycling longitudinal load equal to 80 percent of the load recorded in the Longitudinal Restraint Test, as specified herein, shall be applied as in the procedure above for a total of 25,000 cycles. Do not reposition the rail hold-down assemblies at any time during this test.

c. Test Acceptance Criteria: Withstand the 25,000 cycles of loading with no evidence of failure. Upon visual examination, no component of the fastener shall exhibit any evidence of failure by yielding, abrasion, slippage or fracture, except for any slippage that occurs between the rail hold-down assembly and the rail. The rail shall exhibit no evidence of wear or grooving that would contribute to a failure of the rail.

5. Uplift Repeated Load Test:

a. Procedure: Apply loads to the rail head of a fully assembled fastener to produce alternately a vertical downward load of 9,000 pounds and a vertical upward load of 1,000 pounds at the centerline of the fastener in a direction normal to the rail. Alternate the application of the vertical loads for a total of 1,500,000 complete cycles. Regulate the frequency to prevent component temperature from exceeding 158 degrees Fahrenheit. Do not re-torque threaded elements. Apply the vertical loading during this part of the test at a rate of not less than 25 cycles per minute. If required for testing stability, install a mechanical stop 1/8- inch from each end of the rail, independent of the test rail fasteners.

b. Test Acceptance Criteria: Withstand 1,500,000 cycles of load application with no evidence of failure. Upon visual inspection, no component of the fastener shall exhibit any evidence of failure by yielding, abrasion, or fracture. The rail shall exhibit no evidence of wear or grooving that would contribute to the failure of the rail.

6. Dynamic Longitudinal Restraint Test:

a. Procedure: The dynamic longitudinal restraint test procedure is the same as for the static test, with an additional vibration load applied vertically to the rail head while the longitudinal load is applied. Vertical vibration load: 50 hertz cyclic load with amplitude of 2,000 pounds. Apply vertical load at the rail head at the mid-point between rail seats.

b. Test Acceptance Criteria:

1) Longitudinal load versus deflection plot is linear within the limits shown in Figure 3. At no time during the test shall any component exhibit evidence of failure including permanent deformation.

E. Anchor Insert Tests:

1. General:

a. Anchor inserts used for testing shall conform to the design submitted by the Contractor.

2. Test Conditions: Fourteen (14) test anchor inserts for each anchor insert type shall be furnished by the Contractor. Seven (7) assemblies shall be retained by the Resident Engineer and the other seven (7) assemblies shall be numbered one through seven. Anchor inserts two through seven shall be tested in cast concrete plinth, utilizing the minimum plinth dimensions and specified reinforcement. Concrete shall have a compressive strength in accordance with cast-in-place concrete requirements, and this shall be verified by laboratory tests. Anchor inserts shall be placed in the concrete plinth in accordance with the Contract Drawings.

3. Static Load Tests:

a. Thread Failure Test (Anchor Insert Number 1):

1) Procedure: Anchor insert shall be held in a vise or other device and the bolt twisted to failure. To prevent bottoming before failure, the bolt shall be fitted with a spacer, cut washers, or other means. To provide minimum thread contact only, the spacer thickness shall be designed such that the minimum thread is engaged.

2) Test Acceptance Criteria: Anchor insert shall withstand 600 foot-pounds of torque without evidence of failure. After removal of the torque, the bolt shall be removed from the insert with a torque no

greater than 600 foot-pounds. When torqued to failure, the failure shall be in the bolt threads, not the insert threads.

b. Torsion Test (Anchor Inserts Numbers 2 and 3):

1) Procedure: Anchor insert shall be subjected to a 600 foot-pound of torque applied to the cap bolt head with spacers used on the bolt to prevent bottoming.

2) Test Acceptance Criteria: Anchor insert shall not rotate and concrete shall not crack or show evidence of failure.

c. Restrained Pull-Out Test (Anchor Inserts Numbers 4 and 5):

1) Procedure: A steel plate with a hole in the center a minimum of 1/2-inch in diameter larger than the maximum diameter of the top of the insert shall be placed over the anchor insert on the concrete test block surfaces. The anchor bolt shall then have an upward vertical load of a minimum of 20,000 pounds applied, held for a minimum of 1 minute, and then released.

2) Test Acceptance Criteria: Anchor insert shall have no evidence of failure from causes including but not limited to, slippage and cracking of the concrete at the indicated load.

d. Unrestrained Pull-Out Test (Anchor Inserts Numbers 6 and 7):

1) Procedure: The anchor insert shall have an upward vertical load applied in such a manner that no vertical load is applied to the concrete test block surface within a radius of six inches from the center of the insert. An upward vertical load of 7,500 pounds shall be applied and held for not less than 1 minute.

2) Test Acceptance Criteria: There shall be no evidence of failure from causes including, but not limited to, slippage, and cracking of the concrete to assembly bond at the specified loads.

PART 3 - EXECUTION

3.01 INSTALLATION

A. HR direct fixation fasteners shall be installed in accordance with track construction requirements.

END OF SECTION

FIGURES (On Proceeding Pages)

1. **Figure 1A** - Qualification Tests
2. **Figure 1B** - Production Tests
3. **Figure 2** - Vertical Deflection Limits
4. **Figure 3** - Longitudinal Restraint Limits

SECTION 34 11 36.14 – FIGURE 1A

QUALIFICATION TESTS (QT)

STATIC TESTS (ST)	**ARTICLE**	**TEST NAME/ABBR.**
VERTICAL LOAD TEST (VLT)	2.05.B.1	QT-ST-VLT
LATERAL LOAD TEST (LLT)	2.05.B.2	QT-ST-LLT
LONGITUDINAL RESTRAINT TEST (LORT)	2.05.B.3	QT-ST-LORT
LATERAL RESTRAINT TEST (LART)	2.05.B.4	QT-ST-LART
VERTICAL UPLIFT TEST (VUT)	2.05.B.5	QT-ST-VUT
ELECTRICAL TESTS (ET)	**ARTICLE**	
VOLTAGE WITHSTAND TEST (VWT)	2.05.C.1	QT-ET-VWT
ELECTRICAL RESISTANCE TEST (ERT)	2.05.C.2	QT-ET-ERT
ELECTRIC IMPEDANCE TEST (EIT)	2.05.C.3	QT-ET-EIT
DYNAMIC TESTS (DT)	**ARTICLE**	
DYNAMIC TO STATIC STIFFNESS RATIO TEST (DSSRT)	2.05.D.1	QT-DT-DSSRT
VERTICAL AND LATERAL REPEATED LOAD TEST (VLRLT)	2.05.D.2	QT-DT-VLRLT
ANCHOR BOLT REPEAT LOAD TEST (ABRLT)	2.05.D.3	QT-DT-ABRLT
PUSH – PULL TEST (PPT)	2.05.D.4	QT-DT-PPT
UPLIFT REPEATED LOAD TEST (URLT)	2.05.D.5	QT-DT-URLT
LONGITUDINAL RESTRAINT TEST (LORT)	2.05.D.6	QT-PFT-LORT
POST-FATIGUE TESTS (PFT)	**ARTICLE**	
VERTICAL LOAD TEST (VLT)	2.05.B.1	QT-PFT-VLT
LATERAL LOAD TEST (LLT)	2.05.B.2	QT-PFT-LLT
LONGITUDINAL RESTRAINT TEST (LORT)	2.05.D.6	QT-PFT-LORT
VERTICAL UPLIFT TEST (VUT)	2.05.B.5	QT-PFT-VUT
VOLTAGE WITHSTAND TEST (VWT)	2.05.C.1	QT-PFT-VWT
ELECTRICAL RESISTANCE TEST (ERT)	2.05.C.2	QT-PFT-ERT
ELECTRIACAL IMPEDANCE TEST (EIT)	2.05.C.3	QT-PFT-EIT
DYNAMIC TO STATIC STIFFNESS RATIO TEST (DSSRT)	2.05.D.1	QT-PFT-DSSRT

SECTION 34 11 36.14 – FIGURE 1B

PRODUCTION TESTS (PT)

STATIC TESTS (ST)	**ARTICLE**	**TEST NAME/ABBR.**
VERTICAL LOAD TEST (VLT)	2.05.B.1	PT-ST-VLT
LATERAL LOAD TEST (LLT)	2.05.B.2	PT-ST-LLT
LONGITUDINAL RESTRAINT TEST (LORT)	2.05.B.3	PT-ST-LORT
ELECTRICAL TESTS (ET)	**ARTICLE**	
VOLTAGE WITHSTAND TEST (VWT)	2.05.C.1	PT-ET-VWT
ELECTRICAL RESISTANCE TEST (ERT)	2.05.C.2	PT-ET-ERT
ELECTRIC IMPEDANCE TEST (EIT)	2.05.C.3	PT-ET-EIT
DYNAMIC TESTS (DT)	**ARTICLE**	
DYNAMIC TO STATIC STIFFNESS RATIO TEST (DSSRT)	2.05.D.1	PT-DT-DSSRT
VERTICAL AND LATERAL REPEATED LOAD TEST (VLRLT)	2.05.D.2	PT-DT-VLRLT
POST-FATIGUE TESTS (PFT)	**ARTICLE**	
VERTICAL LOAD TEST (VLT)	2.05.B.1	PT-PFT-VLT
LATERAL LOAD TEST (LLT)	2.05.B.2	PT-PFT-LLT
LONGITUDINAL RESTRAINT TEST (LORT)	2.05.D.6	PT-PFT-LORT
VOLTAGE WITHSTAND TEST (VWT)	2.05.C.1	PT-PFT-VWT
ELECTRICAL RESISTANCE TEST (ERT)	2.05.C.2	PT-PFT-ERT
ELECTRIACAL IMPEDANCE TEST (EIT)	2.05.C.3	PT-PFT-EIT
DYNAMIC TO STATIC STIFFNESS RATIO TEST (DSSRT)	2.05.D.1	PT-PFT-DSSRT

SECTION 34 11 36.14 – FIGURE 2

VERTICAL DEFLECTION LIMITS

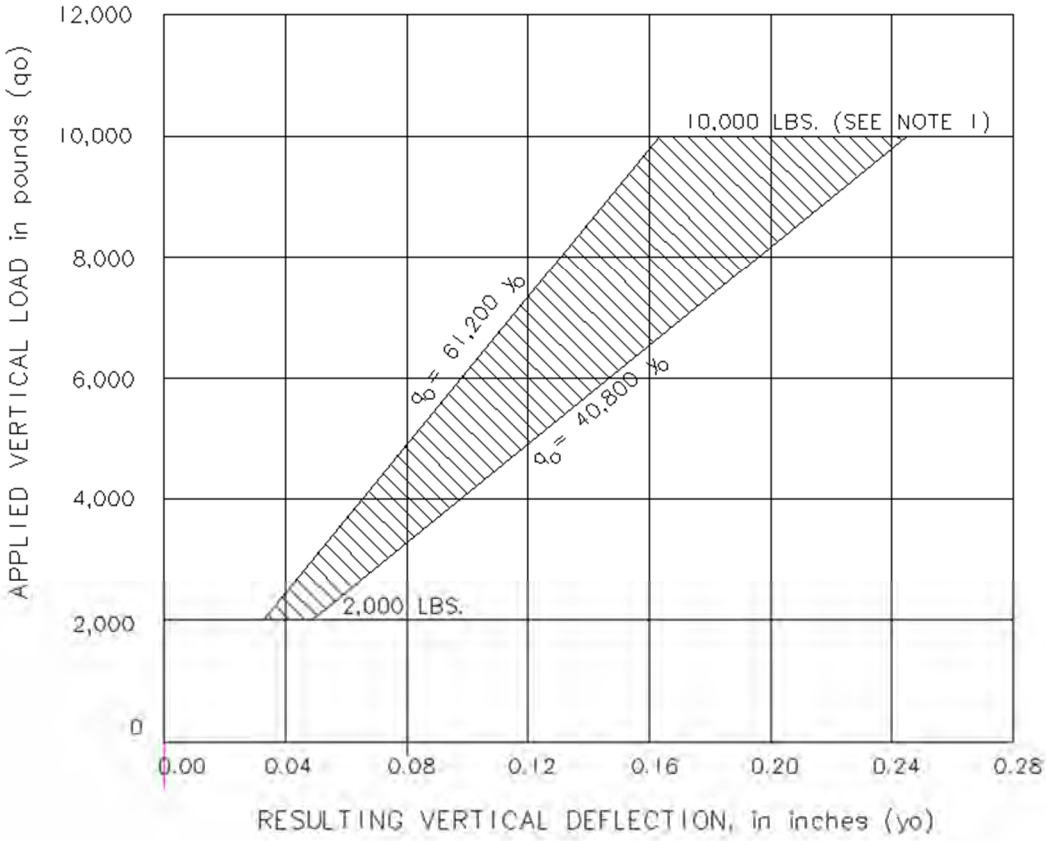

NOTES:

1. MAXIMUM DEFLECTION AT 10,000 LBS. SHALL NOT EXCEED 25% OF THE UNCOMPRESSED THICKNESS OF ELASTOMER PAD.

2. FASTENER SPRING RATE MUST BE BETWEEN 40,800 LBS./IN. AND 61,200 LBS./IN. FOR ALL LOADS BETWEEN 2,000 LBS. AND 10,000 LBS.

SECTION 31 11 36.14 – FIGURE 3

LONGITUDINAL RESTRAINT TEST PLOT

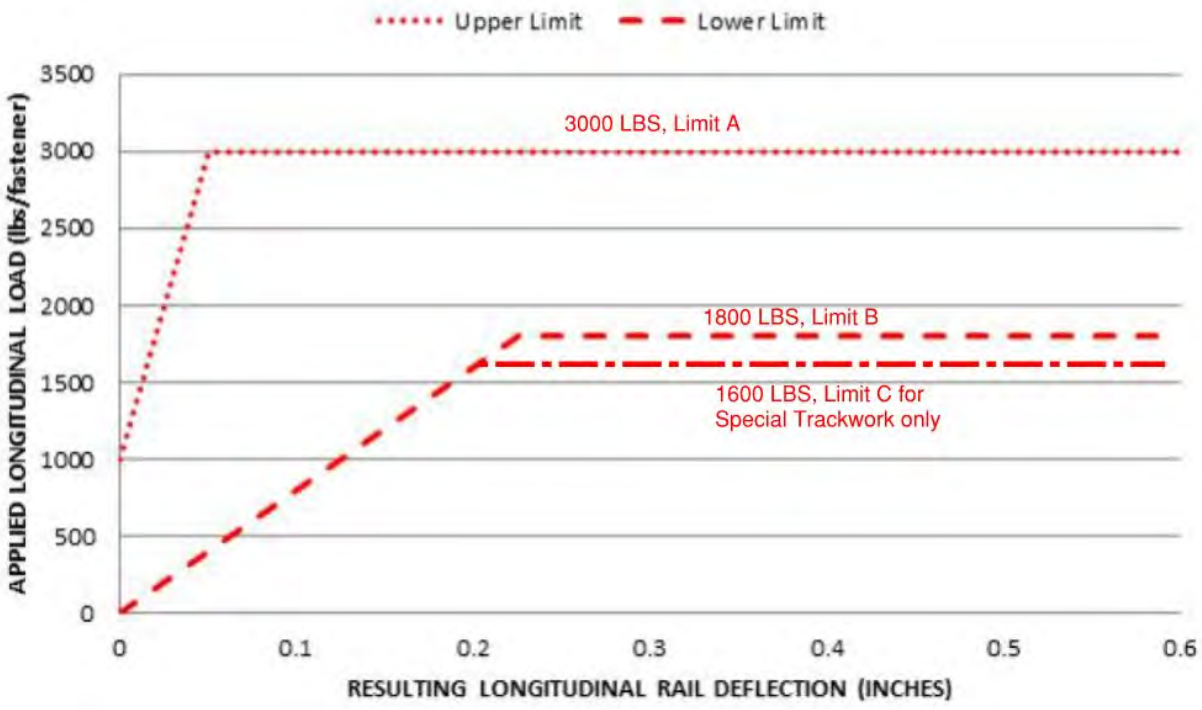

END OF FIGURES

SECTION 34 11 62

RAIL LUBRICATORS

PART 1 - GENERAL

1.01 SUMMARY

A. Section includes:

1. Requirements for the manufacture, furnishing, and delivery of rail lubricators. Trackside Application Systems shall include controllers, metal cabinet and product reservoir, rail attachment hardware, hose and other components necessary for installation.

1.02 REFERENCES

A. This Section incorporates by reference the latest revisions of the following documents:

1. American Railway Engineering and Maintenance of Way Association (AREMA):

a. AREMA Manual of Railway Engineering.

b. AREMA Portfolio of Track Work Plans.

1.03 SUBMITTALS

A. Transmit:

1. Suppliers' product data for rail lubricators, showing the dimensions, details, tolerances, materials, finishes, and fastening system components. Also include:

a. A list of recommended and provided spare parts, including part numbers.

b. Supplier's installation procedures for equipment.

c. Supplier's standard warranty information.

d. Technical Data, including shop drawings for track lubricator controllers, metal cabinet, and metal lubrication reservoir.

e. All certified test reports and certificate of compliance.

1.04 QUALITY ASSURANCE

A. Develop and maintain a quality control program regulating methods, procedures, inspection and testing, samples, and use of certificates of compliance.

1.05 DELIVERY, STORAGE, AND HANDLING

A. Each unit shall be delivered with a manual inside the cabinet.

B. Provide 25 gallons of both winter grade and summer grade grease material with rail lubricator unit. Fill unit with appropriate grade of grease and store unused grade of grease.

PART 2 - PRODUCTS

2.01 PERFORMANCE REQUIREMENTS

A. Gauge Face Lubrication Systems:

1. The lubrication system shall be capable of automatically applying grease to two (2) rails with one (1) unit.

2. The pump shall have the capability of activation based on a non-contact wheel sensor. Activation shall not be mechanically controlled.

3. The pump shall have the capability of activation by wheel/axle count and by time duration.

4. System shall accommodate winter grade grease when the temp is below 40 degrees Fahrenheit.

5. The unit shall be able to deliver grease through a wiper bar design.

6. Wiper bar shall be designed to ensure adequate coverage of the flange and back of flange surfaces.

7. The unit shall be adjustable for how often the lubricant is applied based on wheel/axle passes. Adjustability is required between 1 and 260 wheels/axles.

8. The unit shall contain a top mounted indication light that is LED, white, and visible at a minimum distance of 50 feet by passing trains and inspection vehicles. The light shall turn on during the following service conditions:

a. No power or loss of power.

b. Empty grease container.

B. Gauge Face Grease Material:

1. The Rail Curve Grease shall have the following characteristics:

a. Provide a low coefficient of friction below 0.15 as measured by a twin disc roller rig.

b. Provide superior carry, a minimum of 3,000 feet, in all weather conditions and environments.

c. Not impede track signaling systems.

2.02 PRODUCTS

A. Gauge Face Lubrication Systems:

1. Lubricator shall be a Lincoln model 279183 200 lb stainless steel container single track VAC electric system or approved equal.

2. The unit shall be contained in a metal, watertight cabinet of maximum dimensions 24-inches wide by 40-inches tall by 40-inches deep and include all electric controls, a pump unit, a drive unit, and a lubricant metal reservoir.

a. Reservoir tank shall be constructed of stainless or mild steel in order to withstand the operating environment of the plant. The metal cabinet shall have a noncorrosive finish.

b. The unit shall include all hardware to mount the cabinet to the track structure. The electric equipment shall be designed to operate on 24 Volt DC power and will be supplied / charged by 110 V power.

c. The grease container shall be made of a metal.

d. The grease reservoir shall have sloped plates/walls to reduce the level at which cavitation of the grease around the pump inlet occurs.

e. Lubricant reservoir shall have a capacity of not more than 25 gallons in order to allow for seasonal changes in grease grade.

f. The lubricant system shall have an electronic control panel for precise electronic adjustments of amount (volume) of grease applied.

1) The electrical control panel shall display readouts of the following:

a) Activation settings.

b) Total wheels.

c) Total pump time.

3. Collection Mat:

a. An environmental mat for collection of waste [flung off] grease to eliminate track contamination shall be provided.

2.03 MATERIALS

A. Guage Face Grease Material:

1. The Gauge Face Grease material shall be Rail Curve Grease part number 601-GF2-19000 (winter grade) and 601-GF4-19000 (summer grade) or approved equal.

PART 3 - EXECUTION

3.01 INSTALLATION

A. Install rail lubricators at locations indicated in the Contract Documents.

END OF SECTION

SECTION 34 11 93

TRACK APPURTENANCES AND ACCESSORIES

PART 1 - GENERAL

1.01 SUMMARY:

A. Section includes:

1. Requirements for the construction of concrete crossings. Roadway and pedestrian crossing construction includes the requirements for selecting and qualifying of crossing types, and installation of crossings.

1.02 REFERENCES

A. This Section incorporates by reference the latest revisions of the following documents:

1. American Railway Engineering and Maintenance-of-Way Association (AREMA):

a. Manual for Railway Engineering (AREMA Manual).

b. Portfolio of Trackwork Plans (AREMA Plans).

2. American Association of State Highway and Transportation Professionals (AASTO):

a. AASHTO Standard Specifications for Highway Bridges.

3. ASTM International (ASTM):

a. ASTM D257 Standard Test Methods for DC Resistance or Conductance of Insulating Materials.

1.03 SUBMITTALS

A. Submit:

1. Detailed description of construction procedures for installing each type of grade crossing shall be installed in the Work.

2. Technical Data for each type of crossing system.

3. Electrical Isolation Test Report.

4. Special Tools (If required to install the crossings): Furnish two (2) sets to the Resident Engineer.

1.04 QUALITY ASSURANCE

A. Manufacturers Experience:

1. Crossing Manufacturers are required to have five (5) years of crossing in-service performance history and components of crossing systems fabricated by a recognized manufacturer regularly engaged in the production of specified items. History shall be for light rail application and include electrical isolation performance.

PART 2 - PRODUCTS

2.01 PERFORMANCE / DESIGN REQUIREMENTS

A. Crossing Surfaces:

1. Prefabricated modular panels without modifications to the Manufacturer's standard design except those approved.

2. Removable panels: allow uncomplicated removal and re-installation without causing damage to the crossing system.

3. Walking surface of each panel:

a. Pedestrian and Hi Rail access crossing panels within ballast track: At or below the top of the running rail in accordance with the Contract Drawings when installed.

b. Pedestrian crossing panels within direct fixation track: ¼ inch or ¾ inch below the top of the running rail in accordance with the Contract Drawings when installed.

4. Full installation: Not to require new material after removal and when being re-installed.

5. Skid resistant surface: Proven effective, and highly resistant to chemicals and organic solvents.

B. Crossing panels:

1. Fit without field modifications.

2. Four piece or less modular section without shims to support the panels.

3. Contoured to suit the top of concrete profile providing required clearance for fastening clips.

4. Designed to seat on the entire plinth surface providing full bearing support except in the fastening area.

5. Ends of the panels shall have corrosion resistance (1/4 inch Galvanized, or approved equal) deflector plates installed.

C. Crossing Components:

1. Supply each crossing with associated standard hardware necessary for a complete installation including:

a. The crossing surface and, if applicable, other fastenings necessary for attaching the crossing surface to concrete plinths.

b. Tapered modular pieces or other approved means to close each end of the crossing to prevent damage from dragging equipment.

c. Manufactured hardware to attach end modules to the crossing system and concrete invert.

d. Special tools, if any, for handling and installing of crossing panels.

e. Track Gauge: 4-feet and 8-1/2-inches, measured between the inside faces of the running rail at a point 5/8-inch below the plane defined by the top of the two rails.

f. Flangeway:

1) Flangeway width: See Contract Documents.

2) Flangeway depth: See Contract Documents.

2. The crossing system shall have no rail-to-ground connection or rail-to-rail connection that will cause grounding of the rail or shunting the signal circuit.

2.02 MANUFACTURED PRODUCTS

A. Crossings:

1. Included crossing systems are for at-grade modular segment type roadway and pedestrian crossing system.

2. Used within ballasted and direct fixation track.

3. Material Composition: insulator type design to retard stray current, providing volume bulk resistivity of 1 x 10^7 ohm-cm according to ASTM D257.

4. Provided with a proven marking paint, when required, to delineate limits of pedestrian crossing.

B. Track Pedestrian Crossing Panels, Direct Fixation:

1. Furnish precast concrete panels materials for direct fixation track pedestrian crossings made up of two modular panel center sections and two field section concrete blocks.

2. The following crossing types are examples of acceptable pedestrian crossings panel systems:

a. Omega Industries
7304 NE St. Johns Road
Vancouver, WA 98665

b. Approved equal.

3. Durable and capable of routinely handling incidental loading from passing hi-rail vehicle tires overlapping rail head.

C. Roadway crossing panels, concrete:

1. Furnish precast concrete panels materials for ballast and direct fixation track roadway crossings.

2. The following crossing types are examples of acceptable crossings:

a. Omega Industries
7304 NE St. Johns Road
Vancouver, WA 98665

b. Oldcastle Precast
2808 ‘A’ Street SE
Auburn, WA 98002

c. OMNI Grade Crossing Systems
2075 N. Preakness Drive
Nixa, MO 65714

d. Approved equal.

PART 3 - EXECUTION

3.01 INSTALLATION

A. Install the crossing in accordance with the Supplier's instructions and the approved construction procedures.

B. Construct concrete panel support blocks adjacent to plinths.

C. Space concrete ties in accordance with the requirements specified by the crossing manufacturer.

D. Install standard rail anchors on each end of crossing panel.

E. Determine electrical isolation from the rail to concrete crossing panel for each rail on the gauge and field side (one measurement per track per grade crossing):

1. Minimum impedance required: 10,000 ohms at 50 volts AC between a frequency range from 20 Hz to 20,000 Hz.

F. Apply crossing paint markings.

END OF SECTION

SECTION 34 11 93.10

BUMPING POST

PART 1 - GENERAL

1.01 SUMMARY

A. Section includes:

1. Requirements for:

a. The removal, refurbishing and re-installation of existing Light Rail Vehicle (LRV) Bumping Posts.

b. The design, furnishing and installation of Bumping Posts.

1.02 SUBMITTALS

A. Submit:

1. Work Plan for removing, refurbishing and installing Bumping Post.

2. Design Calculations, Test Reports, Material Specifications, Catalog-cut sheets, and Shop Drawings of proposed Bumping Post if new bumping post is to be installed:

a. If revisions/corrections to the Shop Drawings, are required in the shop review process, the Vendor/Supplier shall make the changes and resubmit the corrected Shop Drawings.

b. The bumping post design, calculations and reports, shall be provided with the U.S. Imperial (English) unit systems.

PART 2 - PRODUCTS

2.01 PERFORMANCE REQUIREMENTS

A. Bumping posts shall be designed to bring an AW0 loaded LRT four-car train under specified speed to a full stop within specified distance without damaging the light rail vehicles (train) or causing derailment of the light rail vehicles.

B. Bumping posts shall be designed to dissipate kinetic energy created by stopping four-vehicle train with vehicle weight loading (AW0) of 110,000 pounds for each vehicle, and design impact speed of 10 miles per hour. Refer to Contract Drawings for design gradient of track through the slide area.

C. Bumping posts shall be designed to slide less than or equal to 18 feet after impact at a deceleration rate of 0.30g or less to safely absorb the amount of kinetic energy with little damage to the light rail vehicle (train) or injuries to operators.

D. Buffer post maximum reaction force during impact: No more than the 162,000 pounds maximum reaction force that the light rail vehicle’s anti-climber can withstand without damage.

E. Contain a stopping distance safety factor of 1.5.

F. Design to engage the anti-climber of the LRT vehicle and prevent any member from obstructing the coupler from the retracted position to the open position. Upon request, Vehicle Drawings will be supplied by Sound Transit to provide information on the following:

1. Coupler location and clearance from top of rail.

2. Width of coupler shall be cleared.

3. Coupler maximum swing angle from center of vehicle.

4. Vehicle anti-climber bar height.

5. Vehicle anti-climber horizontal curvature.

6. Bottom clearance of the anti-climber to top of rail.

7. Center distances of the anti-climber's brace supports.

2.02 PRODUCTS

A. LRV Bumping Post

1. Bumping post shall be a sliding type friction element buffer stop, clamped to the rail, for 115 RE, such as Rawie 12 EB, or approved equal.

2. Complete assemblies including a steel bumping post equipped with a sliding friction buffer stop and suitable for anti-climber impact.

3. Track gauge: 4 feet 8-1/2 inches.

4. Symmetrical about the centerline of the track.

5. Support members shall not project below the rail.

PART 3 - EXECUTION

3.01 INSTALLATION

A. Bumping Post Installation

1. Stationing on the Contract Drawings indicates the front of the cushion head of the bumping post.

2. Install bumping posts at the locations indicated on the Contract Drawings and in conformance with the manufacturer's recommended procedures.

B. Bumping Post Relocation:

1. Stationing on the Contract Drawings indicates the front of the cushion head of the bumping post.

2. Remove bumping posts in conformance with the manufacturer's recommended procedures.

3. Bumping posts shall be reconditioned as prior to installation. Rehabilitation shall include disassembly, cleaning, painting, lubrication and certification. Threaded fasteners shall be replaced with new fasteners, of like size and grade.

4. Install bumping posts at the locations indicated on the Contract Drawings and in conformance with the manufacturer's recommended procedures.

END OF SECTION

SECTION 34 21 10

TRACTION ELECTRIFICATION SYSTEM GENERAL REQUIREMENTS

PART 1 - GENERAL

1.01 SUMMARY

A. Section includes:

1. Requirements for designing and providing the Traction Electrification System (TES) Work generally includes providing new traction power facilities, including the following:

a. Traction Power Substations.

b. Positive DC feeder cables from the substations, disconnecting switches and tie breakers to the OCS.

c. Negative feeders from the substations to the running rails or the impedance bonds.

d. Traction power system transfer trip cable tie-in Work from existing ST TPSS's.

e. Interface with SCADA associated systems and communication systems.

1.02 REFERENCES

A. This Section incorporates by reference the latest revisions of the following documents:

1. American Welding Society (AWS):

a. AWS D1.1/D1.1M - Structural Welding Code – Steel.

2. ASME International (ASME):

a. ASME BPVC IX - Boiler and Pressure Vessel Code, Section IX: Welding, Brazing, and Fusing Qualifications.

3. Society for Protective Coatings (SSPC):

a. SSPC Paint 16 - Coal Tar Epoxy-Polyamide Black (or Dark Red).

4. National Fire Protection Association (NFPA):

a. NFPA 70 - National Electrical Code.

5. American National Standards Institute (ANSI):

a. ANSI C37.2-2022 IEEE Standard for Electrical Power System Device Function Numbers, Acronyms, and Contact Designations.

1.03 SUBMITTALS

A. Submit:

1. Shop Drawings Format:

   a. Use the Sound Transit Link Light Rail Equipment and Facilities Numbering Plan on submitted Contractor drawings and submittals.

   b. Provide a number for each major piece of equipment such as switchgear sections, circuit breakers, and devices:

      1) Prefix: Traction power substation number or OCS segment, as indicated on the Contract Drawings.

      2) Suffix: Indicates the type of equipment or device.

   c. Resident Engineer will furnish numbering scheme.

   d. Comply with Sound Transit's Design Technology Manual.

   e. Identification Scheme: Provide for wires and cables common to both substation and OCS schematics.

2. Provide each of the drawing types listed below for traction power substations:

   a. One-line Diagrams: Provide for the system, and for each substation.

   b. Three-Line Diagrams: Provide for each substation.

   c. Schematic Diagrams:

      1) Format by subsystem, using identical device symbols and wire designators for each subsystem.

      2) Clearly delineate interfaces, from page to page and subsystem to subsystem.

      3) These drawings must include at least the following information:

         a) Substation connection and interconnection electrical schematic drawings shall indicate all wire connections, terminations and identification and shall show nominal voltages, equipment and equipment ratings, currents, frequencies, significant resistance values, and the rating of all loads.

         b) Schematic location (page number, for example) of the energization portion of each device (such as the coil in a relay) shall be noted adjacent to the operating portions (such as relay interlocks) of the device.

   d. Wiring Diagrams:

      1) Provide a set of wiring diagrams for each substation.

      2) Show all wiring, raceways, conduits, and connections.

      3) Provide equipment connection, intra-cubicle, and inter-cubicle wiring diagrams:

         a) Connection diagrams must show the internal wiring and terminal block arrangement within each piece of

equipment and shall identify each outgoing power and control connection and wire.

b) Interconnection diagrams must show wiring from the equipment terminal blocks, to external equipment connections, terminal blocks, and devices.

c) Show nominal voltages, equipment and equipment ratings, currents, frequencies, significant resistance values, and the rating of all loads.

d) Label devices identical to the actual device and show their locations on panels.

e) Each terminal block and device must have its own unique numbers and letters for identification.

4) As a minimum, provide the following information for each wire segment:

a) Wire code (schematic designation).

b) Origin (FROM device and terminal).

c) Destination (TO device and terminal).

d) Wire size.

e. Substation Equipment and Raceway Drawings:

1) Equipment arrangement drawings: Show actual equipment to be provided and details of installation, using the layout provided in Contract Drawings.

2) Alternate substation equipment layouts may be proposed by Contractor, subject to Resident Engineer's approval.

3) Provide the following drawings as a minimum:

a) Substation plans and elevations showing the equipment layout, including equipment numbers, locations, and dimensions.

b) Equipment front elevations and wall elevations showing the location of each piece of equipment and dimensions.

c) Detail drawings of the substation local centralized monitoring system, showing devices, nameplates, front panel elevations, and details.

d) Installation and mounting details for all equipment, including installation of the transformer enclosure partitions, method of anchorage for each piece of equipment, and method for providing electrical isolation for the dc switchgear.

e) Raceway layout plans showing cable trays, conduits, including numbers, locations, and dimensions.

3. Substation ANSI Device Table:

   a. Provide a set of device tables for substation ANSI devices in a single section at the rear of the schematic diagram submittal.

   b. Arrange the table in a logical fashion by system device type.

   c. Provide data for all system and subsystem components including, but not limited to:

      1) Electrical control and power components (groups, panels, pc cards, contactors, relays, circuit breakers, capacitors, inductors, resistors, specialized modules, rectifiers, diodes, fuses and other components, as appropriate).

      2) Electrical equipment (rectifiers, transformers, switchgear, substation local centralized monitoring system, interface terminal board, and the like).

      3) Include the following data:

         a) Equipment and associated number where a device is located.

         b) Elementary schematic drawing number where the device appears.

         c) A brief description of the device.

         d) Manufacturer's model or style number.

         e) Manufacturer's name and type number of the device.

         f) Device rating.

         g) Number, rating, and types of contacts on device, if applicable.

         h) Remarks on any other relevant features of the device.

4. Bills of Material (BOM):

   a. Final Copies of Bills of Materials: Submit before installation of the first material.

   b. Revisions: Submit after approval of a modification requiring revision.

   c. Include the following information for BOM:

      1) Contractor number.

      2) Supplier number.

      3) Provision for Sound Transit's storage number.

      4) Other data required for procurement of materials used in the construction of all parts of the electrification system.

      5) Cross-reference to related drawings and the BOMs.

      6) Generic description or specification.

7) Brand name, where applicable.

8) Manufacturer's part number.

9) Original manufacturer or supplier, including address, telephone number, internet address, FAX number, and contact person.

10) Notation on parts that are custom manufactured only upon request.

5. Closeout Submittals:

a. Provide complete, individual as-built drawing sets for each TPSS including all drawing types listed above, in compliance with Section 01 78 39 - As-Built Documents.

1.04 QUALITY ASSURANCE

A. Installer Qualifications: Work specified in this Section must be performed by Washington State unlimited licensed electricians working for an Electrical Contractor licensed by the State of Washington, skilled and experienced in the installation of the particular products specified in this Section, except as follows:

1. Welding must be done by qualified, certified welders who make only those welds for which they have been qualified in accordance with AWS D1.1/D1.1M, ASME BPVC, Section IX, or other approved qualifying procedures.

2. Records of welder qualification tests must be made available for review upon Resident Engineer's request.

3. The electrically insulated floor covering must be installed by approved workers skilled and experienced in the installation of the product.

B. Regulatory Requirements:

1. Comply with current federal, state, and local requirements including but not limited to applicable Local Authority Having Jurisdiction (AHJ), local Fire Department and Washington State Department of Labor and Industries (L&I).

PART 2 - PRODUCTS

2.01 TRACTION ELECTRIFICATION SYSTEM DESCRIPTION AND DESIGN CRITERIA

A. Traction Electrification System General Parameters:

1. New prefabricated TPSSs must be furnished and installed in locations shown on the Contract Drawings.

2. Positive dc feeder cables from the substations, disconnecting switches and tie breakers to the OCS must be furnished and installed.

3. Negative dc feeders from the substations to the running rails or the impedance bonds must be furnished and installed.

4. Traction power system transfer trip cable tie-in Work from existing ST TPSS's must be furnished and installed.

5. Interface with SCADA associated systems and communication systems must be furnished and installed.

6. Substation Rating: 3 Megawatts or as shown on Issued Construction Drawings, extra heavy-duty traction service.

7. Substations will be unattended.

8. Dc System Voltage:

   a. 1590 Vdc at 1 percent load.

   b. 1500 Vdc at rated load.

9. Maximum Voltage with Regeneration: 1900 Vdc.

10. Substations will be controlled and monitored by local centralized monitoring system (LCMS) and supervisory control and data acquisition system (SCADA). Three control levels must be provided:

    a. Equipment Level: When "Local" is selected, the switchgear operation is controlled locally only. Neither LCC (Link Control Center) level nor LCMS level is able to send control command to the switchgear.

    b. LCMS Level: When "Local" is selected, switchgear is controlled from the LCMS HMI only.

    c. LCC Level: Operation command of switchgear from LCC is possible only when both equipment level and LCMS level have been set to "Remote".

B. Equipment Environmental Requirements:

1. Provide substation equipment suitable for operation at its specified ratings under the specified conditions and operation, without impairments, throughout the range of values listed below.

2. Temperature:

   a. Maximum Ambient Outdoor Temperature: 40 degrees C. (104 deg F).

   b. 24 Hour Average Ambient Outdoor Temperature: 30 degrees C. (86 deg F).

   c. Minimum Ambient Outdoor Temperature: Minus 18 degrees C. (0-degree F).

   d. Maximum Ambient Outdoor Humidity: 90 percent.

3. Design Wind Velocity: 80 mph.

4. Seismic: In accordance with Section 26 05 00 - Common Work Results for Electrical. Meet seismic requirements specified in the International Building Code (IBC) as adopted by Authority having Jurisdiction (AHJ). Provide suitable bracing and anchorage and submit calculations performed and sealed by a structural engineer registered in the State of Washington.

5. Altitude: Less than 500 feet above sea level.

2.02 PERFORMANCE

A. Requirements: Comply with current federal, state and local requirements including but not limited to applicable Local Authority Having Jurisdiction (AHJ), local Fire Department and

Washington State Department of Labor and Industries (L&I). Performance Requirements - General:

1. Provide electrification equipment proven in similar railroad, rail transit, or heavy industrial service.

2. Each component, subassembly and assembly provided in this Contract must be of a proven design with a history of at least 5 years successful operation at the time of Contract award in similar railroad or rail transit service.

3. Systems Integration: Integrate TES elements, such that specified requirements are achieved without conflict or error within or between specified elements, and between the TES and other Systems and Civil components, including interface with existing TES systems.

4. Life Cycle Requirements:

   a. Traction Electrification System Expected Service Life: 30 years in continuous service, 24 hours a day, 365 days a year.

   b. Use off-the-shelf service-proven equipment and hardware to achieve this useful life.

   c. Provide replacement spare parts that are functionally and physically interchangeable for each product class.

2.03 MATERIALS

A. Materials and Equipment:

1. Material must be new and suitable for the use intended and of the manufacturer's latest standard design.

2. Materials and equipment provided must fit within the space provided and shown on the Contract Drawings.

3. Provide materials and equipment which are standard products of manufacturers regularly engaged in the production of such material and equipment.

4. Where two or more units of the same class of material or equipment are required, provide products of a single manufacturer.

5. Similar component parts of different larger assemblies are not required to be the products of the same manufacturer.

6. Discontinued materials or products must not be permitted.

7. Each type of material and equipment must be of the same manufacture and quality throughout the work.

B. Listed and Labeled Equipment and Material:

1. Provide wherever standards for these products have been established.

2. Materials that are not listed or labeled require approval by Sound Transit prior to use.

3. Products which have not been tested or certified for the use intended must not be used when equivalent listed or labeled materials are available.

4. The label or listing will be acceptable as sufficient evidence that the materials and equipment do conform to the specified standards.

5. Electrical equipment and material not listed or labeled must be furnished with a Field Evaluation label provided by a Testing Laboratory approved by the Washington State Department of Labor and Industries (L&I) and certifying that the equipment conforms to the requirements of UL and IEEE or ANSI.

6. This product evaluation must be performed in the factory or on-site as approved by L&I.

7. A request for permission to perform a Field Evaluation in the factory or onsite shall be submitted to L&I for approval.

C. Material and equipment must be designed to ensure satisfactory operation and life in the environmental conditions that exist where the material or equipment is installed.

D. Provide material and equipment suitable for its intended environment as defined by National Electrical Code (NFPA 70):

1. Wet Locations: Refer to Section 26 05 33 - Raceways and Boxes, Article 3.07 B, Box Type Requirements.

2. Damp Locations: Refer to Section 26 05 33 - Raceways and Boxes, Article 3.07 B, Box Type Requirements.

3. Wet or Damp Locations: Provide corrosion resistant fittings or supports, hot dip galvanized or as otherwise specified.

4. Dry Locations: Corrosion resistant painted finishes may be used for equipment and enclosures as approved by Sound Transit.

E. Dissimilar Material Connections:

1. Not permitted at electrical connections or connections requiring disassembly for maintenance or for removal and replacement of equipment.

2. Not permitted except at permanent connections.

3. Provide suitable electrochemical isolation.

4. Isolation treatments must be permanent and not require maintenance or replacement for the life of the equipment or installation.

F. Ferrous Metal:

1. Above Grade: Refer to individual technical sections for requirements.

2. Below Grade and Not Concrete Encased: Hot dip galvanized and coated with minimum of two coats of coal tar epoxy applied to 8mils dry film thickness per coat, except as otherwise specified for PVC coated GRS conduit.

a. Coal Tar Epoxy: SSPC Paint 16.

G. Galvanizing:

1. Wherever “galvanized” is called out in Traction Power application, the material shall be “hot-dip galvanized” and coated in accordance with Section 34 21 27 – Traction Power Metal Fabrication and Finishes.

2. Wherever materials are called out as “hot dip galvanized” or “galvanized”, the coating is intended to be applied in addition to normal manufacturer’s finish.

3. Materials or products specified which are not readily available in the specified hot-dip finish, must be “custom” hot-dip galvanized after manufacture by an independent galvanizer.

4. Where finishes are called out as galvanized and the specified product cannot be either manufactured with a hot-dip finish, or cannot be hot-dip galvanized after manufacture, the specified product must be furnished with a finish that will perform equal to hot-dip galvanizing as approved by Sound Transit.

PART 3 - EXECUTION (NOT USED)

END OF SECTION

SECTION 34 21 16.11

TRACTION POWER SUBSTATION TESTING

PART 1 - GENERAL

1.01 SUMMARY

A. Section includes:

1. Requirements for the following:

a. Testing Traction Electrification System and its components.

b. System Integrated Testing.

c. Other test requirements that appear in other Sections.

1.02 REFERENCES

A. This Section incorporates by reference the latest revisions of the following documents:

1. Institute of Electrical and Electronics Engineers (IEEE):

a. IEEE 80 - Guide for Safety in Ac Substation Grounding.

b. IEEE 81 - Guide for Measuring Earth Resistivity, Ground Impedance, and Earth Surface Potentials of a Ground System.

c. IEEE 400 - Guide For Field Testing and Evaluation of the Insulation of Shielded Power Cable Systems Rated 5 kV and Above.

d. IEEE 1106 - Recommended Practice for Installation, Maintenance, Testing, and Replacement of Vented Ni-Cad Batteries for Stationary Application.

e. IEEE 1653.2 - Standard for Uncontrolled Traction Power Rectifiers for Substation Applications Up to 1500 VDC Nominal Output.

f. IEEE 2720 – IEEE Guide for Rail Potential Management for DC Electrification Systems.

g. IEEE C37.14 - Standard for DC (3200 V and below) Power Circuit Breakers Used in Enclosures.

h. IEEE C37.20.1 - Standard for Metal-Enclosed Low-Voltage (1000 Vac and below, 3200 Vdc and below) Power Circuit Breaker Switchgear.

i. IEEE C37.30.1 - Standard Requirements for AC High-Voltage Air Switches Rated Above 1000 V.30.1 - Standard Requirements for AC High-Voltage Air Switches Rated Above 1000 V.

j. IEEE C37.41 - Standard Design Tests for High-Voltage (>1000 V) Fuse and Disconnecting Cutouts, Distribution Enclosed Single-Pole Air Switches, Fuse Disconnecting Switches, and Fuse Links and Accessories Used with These Devices.

k. IEEE C37.90 - Standard for Relays and Relay Systems Associated with Electric Power Apparatus.

l. IEEE C57.12.91 Standard Test Code for Dry-Type Distribution and Power Transformers.

m. IEEE C57.13 - Standard Requirements for Instrument Transformers.

2. National Electrical Manufacturers Association (NEMA):

a. NEMA PE5 - Utility Type Battery Chargers.

3. International Electrical Testing Association (NETA):

a. NETA ATS - Standard for Acceptance Testing Specifications for Electrical Power Equipment and Systems.

1.03 SUBMITTALS

A. Submit:

1. Test Program Plan:

a. Test Procedures:

1) Submit for each test to be performed under the appropriate Technical Section of these Specifications, not under this Section.

2) Tests must not be performed and test reports will not be considered valid until procedures are approved by Resident Engineer.

b. Test Results:

1) Submit test data after test is performed.

2) Submit for each test to be performed under the appropriate Technical Section of these Specifications and under this Section.

c. Test Reports:

1) Submit after completion of each test unless otherwise indicated.

2) Submit for each test performed under the appropriate Technical Section of these Specifications and under this Section.

3) Factory Design Test Reports:

a) Submit existing test reports prior to scheduled shipment of equipment. Do not ship the equipment until the report is approved by the Resident Engineer.

b) Submit graphical test results including time current characteristic curves for Frame Fault Relay (Device 64 G and H) after completion of the test.

4) Factory Production Test Reports indicated in this Section.

5) Submit Electrically Insulated Floor and Wall Test Report for each substation prior to installation of substation equipment.

6) Submit the following test reports prior to TPSS Site Acceptance Testing:

a) Wire and Cable Testing Report.

b) Substation Ground Test Report. Provide a plot of ground resistance readings on 8.5 by 11-inch size graph paper.

7) Traction Power Substation Site Acceptance Test Reports.

8) Integrated Testing Test Reports:

a) SCADA Tests.

b) Rail Voltage Monitoring and Grounding Devices Tests.

c) Train Start Tests.

d. Qualifications Statements: For testing agency.

e. Test Equipment:

1) Proposed short circuit test switch.

2) List of proposed test instruments and equipment.

1.04 QUALITY ASSURANCE

A. Testing Agency Qualifications: Tests must be performed by the manufacturer, or a company or agency employed by Contractor with all of the following qualifications:

1. Approved by Resident Engineer. Once such a company or agency is approved they must not be discharged or otherwise replaced by Contractor without written approval of Resident Engineer.

2. Personnel assigned to the project must be familiar with electrical/electromagnetic testing procedures, electrical/electromagnetic instrumentation, and general electrical networks.

3. Personnel must be capable of modifying the specified procedures to suit actual field conditions should such modifications become necessary.

B. Witnessing of Tests:

1. Resident Engineer will, at their option, witness all tests.

2. Testing Notification: At least 30 Days prior to each test upon the approval of test procedure, notify Resident Engineer in writing of the date, time, and location the test will be performed.

3. If Resident Engineer elects not to witness a test or tests, test reports must nevertheless be submitted to Sound Transit for review and approval.

4. Witnessing of test by Resident Engineer must not relieve Contractor from its responsibility to produce test report in accordance with Contract Documents.

C. Performance of Testing:

1. Testing must be performed under the direct supervision of the manufacturer of the equipment, except that:

a. Factory design test or production test of individual components must be performed by the component manufacturer at the plant of manufacture or at an approved testing facility.

b. Field testing of insulated power cables rated 2 kV and higher must be performed by a NETA certified technician working for an independent testing company under the direct supervision of Contractor:

1) NETA technician must have at least 5 years' experience in construction acceptance testing.

2) Testing company must be a NETA member and approved by Resident Engineer.

c. Site acceptance testing of each substation must be performed under direct supervision of Traction Power Installation Supervisor specified in Section 34 21 16.25 - Traction Power Substation Installation, and the representative from the manufacturer(s) of the substation equipment.

D. Test Classifications:

1. Factory Design Tests (Level 1 Tests):

a. Must be conducted by or under supervision of the equipment manufacturer.

b. Must demonstrate compliance with specified design requirements.

c. Must be performed on production components, assemblies, subsystems and substations and must be performed on the highest level of assembly that will allow demonstration of design compliance.

d. Limited to the number of units needed to demonstrate design compliance, typically one or two.

2. Factory Production Tests (Level 1 Tests):

a. Must be conducted by or under the supervision of the equipment manufacturer.

b. Must demonstrate that unit to be delivered operates within specified limits and is in compliance with design requirements and industry standards.

c. Test requirements may vary from an inspection and functional demonstration for a simple component to a full system functional demonstration of an assembly.

d. Perform tests of the completed substation equipment at substation manufacturer's facility prior to shipment of the equipment to the site.

e. Include the following:

1) Substation/section tie breakers equipment and ancillary systems including control power for each substation.

2) Factory installed power and control cable and wire.

f. Perform at ambient conditions unless a specific environmental or operating limit is necessary to demonstrate acceptable operation.

3. Traction Power Substation Field Installation and System Tests (Level 2 Tests):

a. Must demonstrate that each substation and section tie breaker is ready for energization and revenue service, both functionally and cosmetically.

b. Include Testing of:

1) Substation/section tie breaker equipment.

2) AC and DC Protective relays.

3) Ancillary systems.

4) Field installed power and control cable.

5) Wiring internal and external to substations/section tie breakers.

6) Protective devices.

7) Current-carrying component torquing: bolts and fasteners.

c. System Integrated Testing (Level 3 Tests):

1) Must demonstrate that the installed TES system functions properly in relation to other system elements.

2) Must demonstrate that all interfaces are correct and operable.

E. Quality of Test Data: Test Readings:

1. Number of readings taken to determine an electrical/electromagnetic constant or property must be sufficient to ensure that random factors due to human error in reading the instruments and transient disturbances in electrical/electromagnetic network have negligible influence on final results.

2. Adequacy of the data can generally be established by the tester as follows:

a. Data must be examined to verify that removal of either the highest or lowest value will not alter the arithmetic average of the group by more than 5 percent.

b. If the average would be altered by more than 5 percent, one more set of data must be taken and results combined with the first set.

c. If the average of the combined data would still be altered by more than 5 percent if the highest or lowest value were removed, an unstable condition might exist and Resident Engineer must be advised.

PART 2 - PRODUCTS

2.01 FACTORY DESIGN TESTS

A. General:

1. Factory design tests must be run on each type of equipment.

2. If design tests have already been performed by the manufacturer of equipment, existing test reports may be submitted. Resident Engineer will determine whether a new design test may be waived.

3. Existing test reports need not meet the format requirements specified in this Section. However, content of reports must include all relevant information to satisfy design standards and Specifications.

4. In the event components have not been design tested, tests must be run on the first production unit and performed in accordance with these Specifications.

5. Sound Transit reserves the rights of requiring test report of any device provided under this contract. Failing to provide appropriate report results in rejection of the device.

6. All applicable equipment must comply with All hardware, software and diagnostic equipment shall comply with Section 25 05 11 - Cybersecurity for Integrated Automation (Operational Technology).

B. TPSS Enclosure:

1. Rain test for TPSS enclosures: Perform in accordance with IEEE C37.20.1. An existing design test will not be accepted; this test will not be waived.

a. In addition to IEEE C37.20.1 requirements, all HVAC systems must be operating at full speed.

b. Replace IEEE C37.20.1 satisfaction of test requirements with the following: the enclosure must have satisfactorily met the requirements of this test if during the visible inspection no water is found inside the enclosure.

c. Each TPSS enclosure must be rain tested without equipment installed, and with all equipment installed.

C. Traction Power Transformer:

1. Resistance measurements of all windings on rated voltage connection and on all tap settings.

2. Impedance and load losses at rated current on all windings on all tap settings in accordance with IEEE 1653.2. Calculate transformer commutating reactance from these tests.

3. Short Circuit Tests:

a. Conduct at a certified laboratory having specified power supply.

b. Perform in accordance with IEEE C57.12.91, to fully evaluate the capability of all windings.

c. Apply faults to terminals of each secondary winding.

d. Make all recommended terminal measurements.

4. Impulse Tests:

a. Perform in accordance with IEEE C57.12.91 with exception that waveform to be used must be 1.4 by 40 microseconds.

b. Perform after completion of short circuit tests.

5. Temperature Rise Tests: In accordance with IEEE C57.12.91 for extra heavy traction service.

6. Audible Sound Level Test: Refer to Section 34 21 16.26 - Transformer-Rectifier Unit, for detailed requirements.

7. Resident Engineer must be the sole judge of the serviceability of transformer after completion of design testing.

D. Rectifier:

1. Dielectric Tests: In accordance with IEEE 1653.2.

2. Rated Voltage Test: Subject rectifier to 110 percent of ac rated voltage for 5 minutes with the dc circuit open.

3. Current Unbalance Test:

a. Maximum current unbalance between rectifier legs must be in accordance with IEEE 1653.2.

1) Bridge unbalance must not exceed plus or minus 10 percent between 50 percent and 150 percent of the rated current.

2) Phase to Phase unbalance must not exceed plus or minus 10 percent between 50 percent and 150 percent of the rated current.

3) No diode must carry more than 120 percent of its proportionate share of the rectifier section current under all operating conditions.

b. Test may be performed during the design test for transformer-rectifier unit.

4. Loss Measurement Test:

a. Perform in accordance with IEEE 1653.2.

b. Test for losses at overloads up to 150 percent.

5. Rated Current Test:

a. At reduced voltage.

b. After temperature stabilization at rated load.

c. Include the overloads outlined in IEEE 1653.2.

d. Perform with one diode removed from each phase arm.

e. Must demonstrate that the maximum safe junction temperature for each diode is not exceeded.

6. Efficiency, Voltage Regulation and Power Factor:

a. Demonstrate for loads of 25, 50, 100, 150, 300, and 450 percent of rated load and in accordance with IEEE 1653.2 11.4.1.3.

E. Transformer-Rectifier Unit Test:

1. Existing test reports of identical units may be accepted in lieu of this test with Sound Transit approval.

2. Transformer-rectifier unit must be tested as a complete assembly including interconnecting bus and/or cables and enclosures. Ac and dc switchgear are not a required part of this assembly.

3. Perform rated current load tests at reduced voltage.

4. Demonstrate compliance with the requirements specified in Section 34 21 16.26 - Transformer-Rectifier Unit.

5. Operate transformer rectifier at 100 percent load for a minimum of 6 hours immediately before running duty cycle tests to ensure temperature stabilization.

6. Verify efficiency, power factor and voltage regulation at loads shown in IEEE 1653.2 for Extra Heavy Traction Service.

7. Record transformer temperature rise during the rated current load tests:

   a. Take loss measurements at specified loads.

   b. Implant six thermocouples into secondary windings of transformer at locations approved by Resident Engineer and mount two thermocouples on transformer frame.

   c. Transformer temperature rise determined by any of the thermocouples must not exceed value specified in Section 34 21 16.26 - Transformer-Rectifier Unit.

8. Perform audible sound level tests in accordance with IEEE C57.12.91 except apply 3-foot distance and maximum sound level in accordance with Section 34 21 16.26 - Transformer-Rectifier Unit.

F. AC Switchgear

1. Perform in accordance with Section 34 21 19.13 - Traction Power Medium-Voltage AC Circuit Breaker Switchgear.

G. DC Switchgear:

1. Perform on the DC switchgear assembly.

2. Perform the "design tests" specified in IEEE C37.20.1.

3. Insert and remove one (1) circuit breaker element into connected position 200 times from disconnect position.

4. Drawout mechanism must function properly showing no signs of wear.

5. Inspect main and auxiliary contacts for damage and weakness.

6. Contacts must sustain no physical damage or wear. No wear is permissible.

7. Contacts must make full contact with mating member as determined by Resident Engineer.

H. DC Circuit Breaker:

1. Perform in accordance with design tests in IEEE C37.14.

2. Follow schedule of design tests defined in IEEE C37.14.

I. AC and DC Protection Relays and Control Devices:

1. Perform in accordance with design tests in IEEE C37.90.

2. Frame Fault Relay (Device 64 G and H): Following design tests are required:

   a. Continuous and Maximum Short Circuit Ratings: Demonstrate by test.

   b. Response Time and Maximum Trip Time: Demonstrate by test.

   c. Maximum trip time for this device must not exceed 50 ms.

3. AC and DC Multifunction Protection Relay Climatic Environmental Type Tests in accordance with IEC 60255-1.

J. DC Disconnect Switches:

1. Conduct a complete set of design tests on one switch of each type in accordance with IEEE C37.30.1 and IEEE C37.41. Resident Engineer may waive design testing and accept instead a notarized certified test report of a complete set of tests on a switch of the same design and ratings.

2. Switches to be tested and certified suitable for use on dc circuits with prospective fault current capabilities of 100 kA, or more.

3. Tests to be performed with switch(es) in enclosure assembled in closed, final operational configuration.

4. Mechanical Test: Subject a sample switch to a maximum number of openings and closings to establish a life cycle capability.

5. Continuous and overload current-temperature tests before and after.

6. Test mounting and operating hardware of switches and hardware to twice maximum operating load.

7. Acceptance criteria: Visual and mechanical performance.

8. All tests must be successfully completed to show that switches meet Specification requirements before final acceptance by Resident Engineer.

K. Substation Local Centralized Monitoring System (LCMS):

1. Perform with all accessories attached in accordance with design tests in IEEE C37.90.

2. Wiring Tests:

   a. Continuity of all wiring.

   b. Megohmmeter test at 1500 Vac/2121 Vdc from all wiring to equipment case for 1 minute.

3. Demonstrate electrical operation and accuracy of all components.

4. Perform a dielectric test on field contacts for 1 minute to confirm the level of voltage isolation of 1500 Vac/2121 Vdc. TE Substation Local Centralized Monitoring System and Intelligent Electronic Devices.

5. Test from LCMS to initiating devices for proper operation.

6. De-bug and test IC/HMI application software to the satisfaction of Sound Transit before installing the IC/HMI in switchgear and beginning factory testing of the dc switchgear.

7. Industrial Computer and PLC based controllers Climate Type Tests in accordance with IEC 61131-2.

L. Electrically Insulated Floor and Wall Tests:

1. Perform hi-potential dielectric tests on the epoxy floor and wall insulation installed in each traction power substation prior to the installation of substation equipment.

2. Provide a hi-potential tester with a voltage range of 0-15,000 Vdc and a current range of 0-2000 microamperes dc to perform the tests.

3. Floor: Perform a wet mop test in accordance with IEEE 1653.6 and as follows:

a. Provide a sponge mop with a non-metallic handle. Provide a copper plate behind the sponge with a wire terminal to attach the test lead.

b. Connect one lead from the tester to the copper plate and the other lead to the station ac ground bus.

c. Apply 4500 Vdc from the hi-potential tester, using precautions such as insulated boots and hot gloves to protect the test technician.

d. Saturate the mop with saline solution and mop the entire insulated floor with the room darkened. Re-saturate the mop as necessary.

e. Leakage current greater than 50 microamperes or visible arcing indicates inadequate dielectric strength of the epoxy coatings; apply additional layers of epoxy until the leakage current is lower than 50 microamperes and there are no visible arcs.

f. The entire floor must be tested with the copper plate.

4. Walls: Perform a Copper Disk Test as follows:

a. Provide a copper disc 4 inches in diameter and 1/4-inch thick. The disk must have a non-conductive handle and wire terminal to attach the test lead.

b. Connect one lead from the tester to the copper disk and the other lead to the station ground bus.

c. Place the copper disc on the wall insulation at a minimum of ten locations selected by Resident Engineer where the laminate is fastened to the wall with mechanical fasteners.

d. Apply 4500 Vdc for 120 seconds and record the leakage current.

e. If leakage current is greater than 50 microamperes, epoxy insulation must be applied to the fastener to increase the insulation and the wall retested.

M. Battery: Design test for the battery must comply with IEEE 1106.

N. Battery Charger: Tests for the battery charger must comply with design tests described in NEMA PE5.

O. Traction Power Substation Factory Acceptance Tests:

1. General Requirements:

a. Perform test for each completely assembled substation at substation manufacturer's facility before shipping substation to site.

b. Perform at ambient conditions unless a specific environmental or operating limit is necessary to demonstrate acceptable operation.

c. Tests must demonstrate that each substation is complete and ready for shipping to the site, both functionally and cosmetically.

2. Pretest:

a. Perform for each substation using an approved test procedure and submit a pretest report.

b. For offsite tests, a pretest report must be submitted with a minimum of a one-week period to review and approve the report, prior to the witness test. Travel arrangements for the Engineer's witness will not be made until then.

3. Wire and Cable Testing:

a. Perform tests after factory wiring and terminations have been installed.

b. Inspect wire and cable for physical damage and proper connections.

c. Protect semiconductor devices against the test voltage by means of shorting jumpers or other methods accepted by Engineer if they are not inherently protected by the circuit in which they are used.

d. Continuity Tests: Check continuity from point to point and check for shorts to ground with an ohmmeter.

e. Insulation Resistance Tests:

1) Measure insulation resistance with a 1000 Vdc megohmmeter.

2) Measure insulation resistance between conductor and ground.

3) Test cables after terminations are complete. Do not connect equipment to the cable system during tests.

4) Acceptance Criteria for 600 V wire and cable: 10 Megohms for 1,000 feet when measured at 25 degrees C.

5) Test Failure: If insulation resistance values are unacceptable, correct deficiency and retest. If the test fails again, replace the entire wire or cable segment.

f. High Potential Tests: In accordance with IEEE 400:

1) Passing Criteria: No insulation breakdown or excessive leakage current.

2) Failures: Locate and determine the trouble, replace defective wires, cables or components, make necessary corrections to installation, and retest without additional cost to the Owner.

g. Control circuit wiring: Test for continuity and insulation after termination.

h. Power and equipment branch circuits: Perform continuity test on conductors.

i. Three-phase loads: Verify circuit phasing.

P. Low-Voltage Panelboards and Enclosed Circuit Breakers:

1. Test circuits for connections in accordance with the wiring diagram.

2. Test that insulation resistance to ground of nongrounded conductors is a minimum of 10 megohms.

3. Test panelboard and load center enclosures for continuity to the grounding system.

4. Test operation of circuits and controls. When testing, operate each control a minimum of 10 times and each circuit continuously for a minimum of 1/2 hour.

5. Test that each panel has a balanced load.

Q. Ancillary Systems:

1. Perform operational and functional tests on each auxiliary and ancillary system provided in this Contract, including but not limited to the following:

a. Auxiliary panelboards.

b. Auxiliary contacts.

c. Door interlocks.

d. Receptacles.

e. Interior, exterior, emergency, and cubicle lighting. Measure lighting levels and confirm that minimum lighting levels are met as required by Sound Transit Requirement Manual, Set 1007.

f. HVAC units and controls.

R. General Substation Operation:

1. Perform a functional test of substation operation.

2. Check the interlocks for proper functioning of alarms and operation of shutdown circuitry.

3. Use strip chart recorders or oscillographs as required to provide a permanent record of the protective functions.

4. Perform other tests as required by substation equipment manufacturer and Engineer to determine the acceptability of the installation and equipment.

2.02 FACTORY PRODUCTION TESTS

A. Traction Power Transformer:

1. Factory Dielectric tests in accordance with IEEE C57.12.91.

2. Applied-voltage and induced-voltage tests in accordance with IEEE C57.12.91.

3. Resistance measurements of all windings on all taps.

4. Ratio tests on the rated voltage connections and on all taps in accordance with IEEE C57.12.91.

5. Polarity and phase relation in accordance with IEEE C57.12.91.

6. No-load losses and excitation current in accordance with IEEE C57.12.91.

7. Partial Discharge Test:

   a. Perform after completion of all design tests.

   b. Subject transformer to an induced voltage of 1.5 times the rated voltage at a frequency between 100 and 400 Hz.

   c. Partial discharge extinction level must be reached at an induced voltage of not less than 1.2 times the rated line-to-line voltage.

   d. Partial discharge extinction level will be defined as the point when the reading at 1.9 MHz is less than ten microvolts or 100 picocoulombs.

B. Rectifier:

1. Dielectric tests in accordance with IEEE 1653.2.

2. Continuity tests of all cables and buses.

3. Rated voltage test in accordance with IEEE 1653.2.

C. AC Switchgear

1. Perform in accordance with Section 34 21 19.13 - Traction Power Medium-Voltage AC Circuit Breaker Switchgear.

D. DC Switchgear:

1. Perform in accordance with IEEE C37.20.1:

   a. Dielectric tests.

   b. Mechanical operation tests.

   c. Electrical operation and control wiring continuity, except that control wiring continuity must be verified by actual electrical operation of control devices.

E. DC Circuit Breaker:

1. Perform on each dc circuit breaker in accordance with IEEE C37.14 prior to mounting inside dc switchgear:

   a. Calibration test.

   b. Control, secondary wiring and device check test.

   c. Dielectric withstand voltage test.

   d. No-load operation test.

2. Perform on each DC circuit breaker after mounting in switchgear:

a. Operation test.

b. Position test: Disconnected, test, and connected positions.

c. Alignment test of primary and secondary contacts.

d. Interlocking test for all positions.

F. DC Disconnect Switch:

1. Perform for each dc disconnect switch in accordance with production tests in IEEE C37.41.

2. Conduct standard production tests on all switches to check the quality and uniformity of workmanship and materials used, including the following:

a. Check for gaps, using a feeler gauge (or other approved method) at each contact and assembly point. Gaps are grounds for rejection.

b. Test operation of all components.

c. Perform power frequency dielectric withstand test.

d. Test electric resistance of current path.

G. AC and DC Protection Relays and Control Devices: In accordance with production tests in IEEE C37.90. If the testing requires the settings to be changed, ensure the settings are returned at the end of testing.

H. Meters, Instruments and Instrument Transformers: Check for accuracy, performance and operation in accordance with IEEE C57.13.

I. Substation Local Centralized Monitoring System (LCMS) and Rail Voltage Monitoring and Grounding System.

1. Prior to Assembly: Test all components, including the LCD, panel meters and control devices for proper operation and function.

2. After Assembly:

a. Verify electrical operation in accordance with IEEE C37.20.1.

b. Verify device accuracy in accordance with IEEE C37.20.1.

c. Test control wiring continuity by actual electrical operation of control devices.

d. Test inputs and outputs for proper operation and short circuits.

J. Electrically Insulated Floor and Wall Tests:

1. Perform hi-potential dielectric tests on the epoxy floor and wall insulation installed in each traction power substation prior to the installation of substation equipment.

2. Provide a hi-potential tester with a voltage range of 0-15,000 Vdc and a current range of 0-2000 microamperes dc to perform the tests.

3. Floor: Perform a wet mop test in accordance with IEEE 1653.6 and as follows:

a. Provide a sponge mop with a non-metallic handle. Provide a copper plate behind the sponge with a wire terminal to attach the test lead.

b. Connect one lead from the tester to the copper plate and the other lead to the station ac ground bus.

c. Apply 4500 Vdc from the hi-potential tester, using precautions such as insulated boots and hot gloves to protect the test technician.

d. Saturate the mop with saline solution and mop the entire insulated floor with the room darkened. Re-saturate the mop as necessary.

e. Leakage current greater than 50 microamperes or visible arcing indicates inadequate dielectric strength of the epoxy coatings; apply additional layers of epoxy until the leakage current is lower than 50 microamperes and there are no visible arcs.

f. The entire floor must be tested with the copper plate.

4. Walls: Perform a Copper Disk Test as follows:

a. Provide a copper disc 4 inches in diameter and 1/4-inch thick. The disk must have a non-conductive handle and wire terminal to attach the test lead.

b. Connect one lead from the tester to the copper disk and the other lead to the station ground bus.

c. Place the copper disc on the wall insulation at a minimum of ten locations selected by Resident Engineer where the laminate is fastened to the wall with mechanical fasteners.

d. Apply 4500 Vdc for 120 seconds and record the leakage current.

e. If leakage current is greater than 50 microamperes, epoxy insulation must be applied to the fastener to increase the insulation and the wall retested.

K. TPSS Enclosure:

1. Rain test for TPSS enclosures: Perform in accordance with IEEE C37.20.1. An existing design test will not be accepted; this test will not be waived.

a. In addition to IEEE C37.20.1 requirements, all HVAC systems must be operating at full speed.

b. Replace IEEE C37.20.1 satisfaction of test requirements with the following: the enclosure must have satisfactorily met the requirements of this test if during the visible inspection no water is found inside the enclosure.

c. Each TPSS enclosure must be rain tested without equipment installed, and with all equipment installed.

L. Traction Power Substation Factory Acceptance Tests:

1. General Requirements:

a. Perform test for each completely assembled substation at substation manufacturer's facility before shipping substation to site.

b. Perform at ambient conditions unless a specific environmental or operating limit is necessary to demonstrate acceptable operation.

c. Tests must demonstrate that each substation is complete and ready for shipping to the site, both functionally and cosmetically.

2. Pretest:

a. Perform for each substation using an approved test procedure and submit a pretest report.

b. For offsite tests, a pretest report must be submitted with a minimum of a one-week period to review and approve the report, prior to the witness test. Travel arrangements for the Engineer's witness will not be made until then.

3. Wire and Cable Testing:

a. Perform tests after factory wiring and terminations have been installed.

b. Inspect wire and cable for physical damage and proper connections.

c. Protect semiconductor devices against the test voltage by means of shorting jumpers or other methods accepted by Engineer if they are not inherently protected by the circuit in which they are used.

d. Continuity Tests: Check continuity from point to point and check for shorts to ground with an ohmmeter.

e. Insulation Resistance Tests:

1) Measure insulation resistance with a 1000 Vdc megohmmeter.

2) Measure insulation resistance between conductor and ground.

3) Test cables after terminations are complete. Do not connect equipment to the cable system during tests.

4) Acceptance Criteria for 600 V wire and cable: 10 Megohms for 1,000 feet when measured at 25 degrees C.

5) Test Failure: If insulation resistance values are unacceptable, correct deficiency and retest. If the test fails again, replace the entire wire or cable segment.

f. High Potential Tests: In accordance with IEEE 400:

1) Passing Criteria: No insulation breakdown or excessive leakage current.

2) Failures: Locate and determine the trouble, replace defective wires, cables or components, make necessary corrections to installation, and retest without additional cost to the Owner.

g. Control circuit wiring: Test for continuity and insulation after termination.

h. Power and equipment branch circuits: Perform continuity test on conductors.

i. Three-phase loads: Verify circuit phasing.

M. Burn-In Test of Each IED or IC:

1. Place equipment in an environmental chamber and cycle continuously between zero degree C and 60 degrees C for 20 cycles.

2. Each cycle must be 8 hours in duration. Maximum and minimum temperature must be continuously sustained for 3.5 hours in each cycle.

3. Confirm each IED and IC performs as specified at completion of test.

N. Remote I/O Units:

1. Verify electrical operation.

2. Test control wiring continuity by actual electrical operation of control devices.

3. Test inputs and outputs for proper operation and short circuits.

O. Bolts and Fasteners Torque Verification:

1. Test procedure must include shop drawings showing all the current-carrying bolts and fasteners being tested.

2. Prior to testing, shop drawings must be marked up indicating which bolts will be verified. Marked up shop drawings will be referenced in Test record sheets.

3. Perform test after wiring has been installed.

4. Verify and record that all current-carrying bolts and fasteners are properly torqued with a calibrated torque wrench.

   a. Use two wrenches when tightening bolted connections to prevent damage.

   b. Torque wrenches must be calibrated as per manufacture's recommended value.

   c. Add a torque mark to the nut side of the bolt after each bolt and fastener is verified. Wax or paint marker must be used.

   d. Determination in the field to use a visual method of inspection must be agreed upon by all parties and documented in the procedure.

5. Tests must be witnessed by DBPM/CMC or ST witness. All parties must sign approved Test Record sheet detailing bolts checked.

6. Follow torque specification tables as listed in the Appendix for each bolt type discovered.

7. Test Record sheet must be completed in full.

8. The report must include shop drawings showing all bolts and fasteners verified in the substation. Any determinations to use visual inspection method must be documented in the report.

9. Re-verification of the bolt and fastener torque must take place after any rework or re-assembly of equipment.

PART 3 - EXECUTION

3.01 FIELD QUALITY CONTROL – FIELD INSTALLATION TESTS

A. General Requirements:

1. Perform tests in this Section after complete installation of each traction power substation, including connecting wiring, before energization.

2. Verify that all equipment is properly installed in accordance with approved drawings, in operable condition and all open inspection items and NCRs have been corrected.

3. No equipment must be energized or placed in operating mode until completion of Field Installation Testing and permission of Resident Engineer.

B. General Substation Operation:

1. Perform a functional test of substation operation prior to energizing the substation. Energize only circuits of 600 V or less for this test.

2. Check interlocks on enclosure and panels for proper function of alarm and shutdown circuitry.

3. Use strip chart recorders or oscillographs as required to provide a permanent record of the protective functions.

C. Electrically Insulated Floor and Wall Tests:

1. Perform hi-potential dielectric tests on the epoxy floor and wall insulation installed in each traction power substation after the installation of substation equipment, in the field.

2. Provide a hi-potential tester with a voltage range of 0-15,000 Vdc and a current range of 0-2000 microamperes dc to perform the tests.

3. Floor: Perform a wet mop test in accordance with IEEE 1653.6 and as follows:

a. Provide a sponge mop with a non-metallic handle. Provide a copper plate behind the sponge with a wire terminal to attach the test lead.

b. Connect one lead from the tester to the copper plate and the other lead to the station ac ground bus.

c. Apply 4500 Vdc from the hi-potential tester, using precautions such as insulated boots and hot gloves to protect the test technician.

d. Saturate the mop with saline solution and mop the entire insulated floor with the room darkened. Re-saturate the mop as necessary.

e. Leakage current greater than 50 microamperes or visible arcing indicates inadequate dielectric strength of the epoxy coatings; apply additional layers of epoxy until the leakage current is lower than 50 microamperes and there are no visible arcs.

f. All accessible portions of the floor must be tested with the copper plate.

4. Walls: Perform a Copper Disk Test as follows:

   a. Provide a copper disc 4 inches in diameter and 1/4-inch thick. The disk must have a non-conductive handle and wire terminal to attach the test lead.

   b. Connect one lead from the tester to the copper disk and the other lead to the station ground bus.

   c. Place the copper disc on the wall insulation at a minimum of ten locations selected by Resident Engineer where the laminate is fastened to the wall with mechanical fasteners.

   d. Apply 4500 Vdc for 120 seconds and record the leakage current.

   e. If leakage current is greater than 50 microamperes, epoxy insulation must be applied to the fastener to increase the insulation and the wall retested.

D. Wire and Cable Testing:

1. Perform tests after field wiring has been installed in place and terminations installed.

2. Continuity Tests: Check continuity from point to point and check for shorts to ground with an ohmmeter.

3. High Potential Tests: In accordance with Section 34 21 28 - Traction Power DC Insulated Conductors and Cables.

4. Test 600 V control circuit wiring for continuity and insulation after termination.

5. Protect semiconductor devices against the test voltage by means of shorting jumpers or other methods accepted by Resident Engineer if they are not inherently protected by the circuit in which they are used.

6. DC Feeder Cables and other 2.4 kV conductors:

   a. Conduct test prior to cables being connected to rails or OCS.

   b. Perform test in accordance with Section 34 21 28 - Traction Power DC Insulated Conductors and Cables.

7. Medium Voltage Cables: Test in accordance with Section 34 21 28 - Traction Power DC Insulated Conductors and Cables.

E. Grounding in TPSS: Verify correct grounding of all equipment requiring grounding.

F. Test of the Substation Ground:

1. Test the ground at each substation in accordance with IEEE Standard 81.

2. An established metallic ground may be utilized as the test reference.

3. Perform other tests as required by substation equipment manufacturer and Sound Transit to determine the acceptability of the installation and equipment.

G. Bolts and Fasteners Torque Verification

1. Test procedure must include shop drawings showing all the current-carrying bolts and fasteners being tested.

2. Prior to testing, shop drawings must be marked up indicating which bolts will be verified. Marked up shop drawings will be referenced in Test record sheets.

3. Perform test after delivery and field wiring has been installed in place and terminations installed.

4. Verify and record that all current-carrying bolts and fasteners are properly torqued with a calibrated torque wrench.

   a. Use two wrenches when tightening bolted connections to prevent damage.

   b. Torque wrenches must be calibrated as per manufacture's recommended value.

   c. Add a torque mark to the nut side of the bolt after each bolt and fastener is verified. Wax or paint marker must be used.

   d. Determination in the field to use a visual method of inspection must be agreed upon by all parties and documented in the procedure.

5. Tests must be witnessed by DBPM/CMC or ST witness. All parties must sign approved Test Record sheet detailing bolts checked.

6. Follow torque specification tables as listed in the Appendix for each bolt type discovered.

7. Test Record sheet must be completed in full.

8. The report must include shop drawings showing all bolts and fasteners verified in the substation. Any determinations to use visual inspection method must be documented in the report.

9. Re-verification of the bolt and fastener torque must take place after any rework or re-assembly of equipment.

H. AC Switchgear:

1. Perform in accordance with Section 34 21 19.13 - Traction Power Medium-Voltage AC Circuit Breaker Switchgear.

I. DC Switchgear:

1. High-potential Tests:

   a. Disconnect high-resistance ground relay, Device 64, for this test.

   b. Perform test between the AC and DC switchgear, including fasteners and the isolation laminate, at 2500 Vdc. Leakage current must be less than 50 microamperes.

   c. Perform test from dc switchgear enclosure to ground at 2500 Vdc, Leakage current must be less than 50 microamperes.

   d. Perform continuity tests on all interconnecting cables and buses.

e. Perform insulation test on all interconnecting feeder cables using a 2500 Vdc megohmmeter for 1 minute.

f. Test positive and negative feeder buses to ground using a 2500 Vdc megohmmeter for 1 minute.

g. Verify load measuring and reclosing functions.

2. Verify proper operation of all interlocks and Kirk key schemes.

J. DC Disconnecting Switches:

1. Perform continuity and insulation tests on all interconnecting cables and buses.

2. Test positive or negative feeder buses to ground using a 2500 Vdc megohmmeter for 1 minute.

3. Verify proper operation of all interlocks and Kirk key schemes.

K. AC Relays:

1. Verify proper operation and setting of all relays.

2. Where applicable, settings to be in accordance with approved relay coordination curves. If the testing requires the settings to be changed, ensure the settings are returned at the end of testing.

3. Verify the current transformer ratio set in the relay matches the ratio being used. If a multi-ratio transformer is being used, verify the tap installation.

L. DC Relays:

1. Verify proper operation and setting of all relays.

2. Where applicable, settings to be in accordance with approved relay coordination curves. If the testing requires the settings to be changed, ensure the settings are returned at the end of testing.

M. Traction Power Transformers:

1. Perform insulation tests between windings, between windings and ground, and between the core and ground using a 2500 Vdc megohmmeter for 1 minute.

2. Perform functional tests of temperature protective devices.

N. Rectifiers.

1. Perform insulation tests between the diode strings and rectifier enclosure using a 2500 Vdc megohmmeter for 1 minute.

2. Perform insulation tests between the enclosure and ground using a 2500 Vdc ohmmeter for 1 minute.

3. Perform a functional test of all temperature, protective, monitoring and alarm devices.

O. Substation Local Centralized Monitoring System (LCMS):

1. Perform control circuit functional test by actuating control switches and observing the operation of circuit breakers.

2. Simulate alarm functions at each device at the switchgear, transformer and rectifier and verify correct indication at substation LCMS.

3. Verify correct operation of each function and display.

P. Frame Fault (Device 64G & H) Tests:

1. Connection: As shown in the one-line diagram.

2. Test: Simulate a 1500 Vdc to frame fault by passing low dc current levels through the relays.

3. Approval: Provide graphical outputs, including time-current characteristics, onsite at the time of testing for review and approval.

4. Criteria: Maximum total clearing time including operation of the 64G & H relay, the substation lock-out relay, and the tripping of the main AC and DC feeder breakers must not exceed 300 ms.

5. Field Adjustments: In the event that certain test conditions do not conform to the test procedure, make necessary field adjustments, perform necessary calculations to demonstrate successful test completion, present the calculation method to Resident Engineer for review, and include with the test report.

Q. Rail Voltage Monitoring and Grounding Devices Tests:

1. Test: Demonstrate proper function of the rail-to-earth relay and rail-to-earth clamping device.

2. Simulate rail-to-earth voltages and currents to show that the substation will alarm, trip, and short circuit rail to earth when the voltage and currents exceed the alarm, trip, and short circuit points specified in Section 34 21 16.27 - Rail Voltage Monitoring and Grounding System.

R. Battery:

1. Perform after substation equipment has been installed on site.

2. Perform acceptance tests in accordance with IEEE 1106.

S. Battery Charger:

1. Perform after substation equipment has been installed on site.

2. Perform in accordance with NEMA PE5.

T. Ancillary Systems: Perform operational and functional tests on auxiliary and ancillary systems including HVAC units, auxiliary panelboards, auxiliary contacts, door interlocks, receptacles, emergency lights, fans, and all systems provided in this Contract that are not specifically called out in this Section.

3.02 FIELD SYSTEM TESTING

A. Perform tests in this Section after energization; obtain permission from Resident Engineer prior to energizing substation.

B. Adjust Traction Power Transformer taps for optimum dc output voltage based on ac service voltage at each location.

C. Transformer Rectifier Unit: Perform audible sound test inside substation in accordance with IEEE C57.12.91, except for the following:

1. Apply 3-foot distance, energized condition, and maximum sound level in accordance with requirements of Section 34 21 16.26 - Transformer-Rectifier Unit.

2. Perform with HVAC system turned off.

NOTE: If the sound level exceeds WAC and OSHA requirements after mitigations are implemented, hearing protection must be provided and a sign posted.

D. Transfer Trip, ETS, including all FCC ETS, and SSS Test: Perform complete functional and integrated tests to verify operation in accordance with the requirements in Section 34 21 16.25 - Traction Power Substation Installation and Section 34 21 19.16 - DC Switchgear.

E. Test operational functions and interface with existing substations of all elements listed in D.

F. DC Short Circuit Tests:

1. Close in Fault Test:

a. Purpose: This test is performed to determine system Imax and adjust protection relay settings.

b. Preparation:

1) Disable the automatic tripping elements of the dc breakers during this test in order to obtain data of actual fault current levels.

2) Place a jumper across line and load terminals of the feeder breaker and move to the connected position.

3) Energize only one TPSS. The adjacent substations are de-energized.

c. Test: Using a short circuit switch (SCS), apply a bolted fault from line side of the dc feeder breaker to the negative bus.

d. After Test: Verify that the dc breaker trips according to protection coordination study.

2. Mid Fault Test:

a. Purpose: This test is performed to determine the system resistance and inductance profile and adjust protection relay settings.

b. Preparation:

1) Disable the automatic tripping elements of the dc feeder breakers.

2) Energize only one TPSS. The adjacent substations are de-energized.

c. Test: Using a short circuit switch (SCS), apply a bolted fault from messenger wire to rail 2,500 feet from TPSS.

d. After Test: Verify and apply new protective settings if necessary.

e. Re-test by repeating Mid Fault Test with new settings to verify that the breaker trips according to new protection setting.

3. Distant Fault Test:

a. Purpose: This test must verify that the dc protection relay will detect a fault at the furthest point from the substation under test and adjust protection relay settings.

b. Preparation: Energize only one TPSS. The adjacent substations are de-energized.

c. Test: Using a short circuit switch (SCS), apply a bolted fault from OCS to rail at the location furthest from the feed point of the substation under test.

d. After Test: Verify that the dc breaker trips according to protection coordination study.

3.03 SYSTEM INTEGRATED TESTING

A. Procedures refer to Section 01 95 00 - System Integration Requirements.

B. After completion and acceptance by Sound Transit of the field tests, perform integrated testing, as described below.

C. SCADA Tests:

1. Test all SCADA points from initiating device to IC for proper operation.

2. Coordinate and test from each initiating device to Central Control.

D. Rail Voltage Monitoring and Grounding Devices Tests:

1. For each substation, provide a 48-hour chart recording of the rail-to-earth voltages and currents measured at the terminals of the Negative Cubicle during simulated revenue service.

a. Set horizontal and vertical scale such that both time duration and magnitude of rail-to-earth voltages/currents are clearly readable.

b. Resolution must be no less than 100 ms for time and 2 V for voltage.

2. Iteratively adjust the annunciation and trip setpoints until optimum settings have been determined to the satisfaction of Sound Transit. This process may require several weeks or more of monitoring and adjusting settings.

3. Submit settings to Sound Transit after all of the following conditions are met:

a. The substation remains on line for 14 Days without a nuisance trip (tripping under normal operation without apparent reason) including times when adjacent substations are removed from service for at least 1 hour.

b. The recommended settings conform to IEEE 2720 for safe touch and step potential.

4. Chart Recording after acceptance of settings:

a. For each substation, after the Rail Voltage Monitoring and Grounding Devices have been set and the settings accepted by Sound Transit,

submit a 48-hour chart recording of the rail-to-earth voltages and currents measured at the terminals of the dc switchgear for record and for final approval.

1) Set horizontal scale so that both time duration and magnitude of rail-to-earth voltages/currents are clearly readable.

2) The recording must be taken on a weekday, during actual or simulated revenue service and must become a part of the as-built record documentation.

5. After the line is open to the public, for each substation, provide a week of chart recording of the rail-to-earth voltages and currents measured at the terminals of the Negative Cubicle during simulated revenue service.

a. Set horizontal and vertical scale such that both time duration and magnitude of rail-to-earth voltages/currents are clearly readable.

b. Resolution must be no less than 100 ms for time and 2 V for voltage.

E. Train Start Tests:

1. Contractor must furnish the test procedure for these tests, but Sound Transit will direct the tests. Sound Transit will furnish four-car trains AW2 loaded.

2. Purpose:

a. Demonstrate the traction electrification system will allow multiple trains to start under full load with one TPSS out of service.

b. Adjust protection relay settings as part of testing. Include final settings in train start test report.

c. Monitor and record R2G data during the train start test.

END OF SECTION

APPENDICES (On Proceeding Pages)

1. **Appendix A:** Torque Specifications Tables

APPENDIX A: TORQUE SPECIFICATIONS TABLES

Table 1: US Standard Fasteners- Heat-Treated Steel- Cadmium or Zinc Plated

Grade	SAE 1&2	SAE 5	SAE 7	SAE 8
Minimum Tensile (P.S.I)	64K	105K	133K	150K
Bolt Diameter (In Inches)	Torque (Foot Pounds)			
¼ inch	4.0	5.6	8.0	8.4
5/16 inch	7.2	11.2	15.2	17.6
3/8 inch	12.0	20.0	27.2	29.6
7/16 inch	19.2	32.0	44.0	48.0
½ inch	29.6	48.0	68.0	73.6
9/16 inch	42.4	70.4	96.0	105.6
5/8 inch	59.2	96.0	133.6	144.0
¾ inch	96.0	160.0	224.0	236.8
7/8 inch	152.0	241.6	352.0	378.4
1.0 inch	225.6	372.8	528.0	571.2

Table 2: US Standard Fasteners- Silicon Bronze

Bolt Diameter (in Inches)	Nonlubricated (Foot-Pounds)	Lubricated (Foot-Pounds)
5/16 inch	15	10
3/8 inch	20	15
½ inch	40	25
5/8 inch	55	40
¾ inch	70	60

Table 3: US Standard Fasteners- Aluminum Alloy

Bolt Diameter (in Inches)	Nonlubricated (Foot-Pounds)	Lubricated (Foot-Pounds)
5/16 inch	13	8

3/8 inch	16	11
½ inch	35	20
5/8 inch	47	32
¾ inch	60	48

Table 4: US Standard Fasteners: Stainless Steel

Bolt Diameter (in Inches)	Nonlubricated (Foot-Pounds)	Lubricated (Foot-Pounds)
5/16 inch	14	10
3/8 inch	25	20
½ inch	45	30
5/8 inch	60	45
¾ inch	90	80

Table 5: Metric Standard Fasteners- Zinc Plated and Stainless Steel

Hardware Material	Connection Type	Bolt Size (Metric)	Torque Values		
			Nm	ft-lb	in-lb
Clear/Yellow Zinc Plated Steel	Shunts	M16	180	133	1593
	Busbar to Busbar	M12	80	59	708
	Busbar to Surge Arrester (with insulator only)	M12	50	37	443
	Busbar to Pin Insulator	M12	28	21	248
	Busbar to Fuse	M12	23	17	204
	Contact Blocks	M12	74	55	655
	Contact Blocks	M10	42	31	372
	Heatsink to G11 (fiberglass) Support Bars	M8	23	17	204
	Busbar to Heatsink	M8	23	17	204
Stainless Steel	Busbar to Busbar	M16	115	85	1018

Busbar to Busbar	M12	50	37	443
Busbar to Pin Insulator	M12	28	21	248
Busbar to Fuse	M12	39	29	345
Busbar to Busbar	M10	25	18	221
Busbar to Busbar	M8	13	10	115
Busbar to Fuse	M8	11	8	97
Set Screws	M8	9.5	7	84

Table 6: Grade 5 Hardware- Bus Bar Connections Torque Specifications

Size (in Inches)	Foot-Pounds
¼ inch	7
5/16 inch	12
3/8 inch	20
½ inch	50

END OF APPENDICES

SECTION 34 21 16.15

PAD MOUNTED DC DISCONNECT SWITCHES

PART 1 - GENERAL

1.01 SUMMARY

A. Section includes:

1. Requirements for manual operated no load break pad mounted DC disconnect switches.

1.02 REFERENCES

A. This Section incorporates by reference the latest revisions of the following documents:

1. ASTM International (ASTM):

a. ASTM B187/B187M - Standard Specification for Copper, Bus Bar, Rod, and Shapes and General Purpose Rod, Bar, and Shapes.

2. Institute of Electrical and Electronics Engineers (IEEE):

a. IEEE C37.41 - IEEE Standard for Design Tests and Specifications for High-Voltage (> 1000 V) Fuses and Accessories

b. IEEE C37.30.1 - IEEE Standard Requirements for AC High-Voltage Air Switches Rated Above 1000V.

3. National Electrical Manufacturers Association (NEMA):

a. NEMA 250 - Enclosures for Electrical Equipment (1,000 Volts Maximum).

b. NEMA ICS 1 - Industrial Control and Systems: General Requirements.

c. NEMA ICS 2 - Industrial Control and Systems Controllers, Contactors and Overload Relays Rated 600 Volts.

1.03 SUBMITTALS

A. Submit:

1. Product Data: Complete manufacturer's descriptions, catalog data, and information including materials and model numbers:

a. Where there is a Kirk key scheme, provide descriptions, catalog data, materials and information including detailed arrangement drawings.

2. Shop Drawings: Manufacturer's general and detail arrangement drawings for switches, operating linkage and enclosures:

a. Provide all dimensions including enclosure.

b. Provide installation instructions.

3. Switch Mounting: Provide mounting details for all types of switch arrangements:

a. Submit seismic calculations for each type of switch mounting arrangement sealed by a registered professional engineer in the State of Washington.

4. Testing: Submit test procedures and test reports in accordance with Section 34 21 16.11 - Traction Power Substation Testing.

5. Operation and Maintenance Data:

a. Description of the switch and its components.

b. Manufacturers' operating and maintenance instructions, parts list, illustrations, and diagram for components.

c. Expected list of spare parts.

d. Nameplate designation: Submit nameplates and designation.

PART 2 - PRODUCTS

2.01 MANUFACTURED PRODUCTS

A. DC Disconnecting Switches:

1. Description: Enclosed, single-pole single-throw, or single-pole double-throw air break switch type with manual or motorized operator.

a. Design must comply with IEEE C37.41 and IEEE C37.30.1, ASTM B187/B187M, NEMA ICS 1, and NEMA ICS 2.

b. Ratings:

1) Nominal Voltage: 1500 Vdc.

2) . (Dielectric Withstand Level: 5000 Vdc for 1 minute.)

3) Continuous Current Ratings: As indicated Issued for Construction Drawings, without the switch contact temperature rise exceeding 50 degrees C above a maximum ambient temperature of 40 degrees C.

4) Momentary Peak Current Withstand: Minimum 90 kA.

5) Short-Time Current Rating: Minimum 70 kA, average, for 0.25 second.

2. Switch Contacts:

a. Moving and stationary contact surfaces: Silver-plated copper.

b. Other current-carrying parts: High-conductivity copper or copper alloy.

c. Contacts must be self-aligning, wear compensating, and with initial wiping action.

d. Hinge and jaw contacts must be bolted-pressure type with non-ferrous or stainless steel self-clamping mechanism, or other approved high-pressure type contact arrangement.

3. Switch Insulation Structure:

   a. Materials used for the switch assembly insulation structure must be noncombustible, non-hygroscopic, and tracking resistant.

   b. The mechanical strength of the insulation structure must match the stresses imposed by the rated momentary current, opening and closing operations.

B. Switch Enclosures:

1. Switch enclosures must be suitable for applications indicated in Contract Drawings, and designed for outdoor use to NEMA 250, Type 3R.

2. Provide a separate enclosure for each switch, except as indicated.

3. Enclosure Material: Molded, fire-retardant fiberglass-reinforced polyester:

   a. Glass to resin ratio: 30 to 70.

   b. Thickness: Minimum 1/4-inch.

   c. Tensile strength: Minimum 1,500 psi.

   d. Water absorption: Maximum 0.05 percent in 24 hours.

   e. Add inhibitors to protect enclosure from possible deterioration due to ultraviolet rays.

   f. Color: ANSI 61 Grey.

   g. Provide a protective coat of clear polyester gel on exterior surfaces.

4. Exterior hardware: Stainless steel or non-ferrous metal.

5. Doors:

   a. Hinges: Continuous stainless steel, providing 120 degrees minimum swing opening.

   b. Provide doorstop.

   c. Provide door gasket.

   d. Latch: Three-point, stainless steel.

   e. Operating handle: Non-metallic.

   f. Locking provisions: Heavy duty lugs to accept one heavy-duty padlock provided by Contractor. Keying requirements to be determined by Sound Transit.

6. Viewing windows: Provide one or more, as required, shatterproof, to permit observation of switch position status from outside enclosure with door closed.

7. Cable entrance: Provide conduit hubs, as required or as indicated.

8. Exterior mounting tabs: Suitable to hold switch and box with two tabs removed.

9. Signage: Provide each disconnecting switch enclosure with a warning sign and nameplate by contractor as follows:

a. Material: Corrosion resistant and ultraviolet protected.

b. Location: Mount on enclosure door.

c. Warning sign: "DO NOT OPERATE UNDER LOAD", with 2-inch-high minimum letter size.

d. Nameplate designations: Will be provided by Resident Engineer.

10. Mimic bus: Provide on front of all outdoor pad mounted and indoor type disconnect switch enclosures.

a. Mimic bus must be factory applied, red color, 3/8-inch wide and minimum 1/32-inch thick.

b. Outdoor pad mounted enclosure mimic bus material and installation must be weatherproof.

11. Non-current Carrying Metallic Parts:

a. Interior of boxes: must be insulated.

b. Exterior: Insulate mounting hardware protruding through enclosure wall.

c. No grounds must be present in switch boxes.

C. Pad-Mounted or Wall-Mounted Manual-Operated Disconnecting Switch Assembly

1. Provide each switch with an insulated manual-operating handle, externally mounted on the outside.

2. Provide corrosion resistant nameplates permanently secured to enclosure to show OPEN and CLOSED positions of switch contacts.

3. Provide operating handle with heavy-duty lugs to accept one padlock, provided by Contractor, in the fully open or closed switch positions. Sound Transit to provide padlock keying requirements.

4. Provide each switch with two Form C position limit switches, one to operate at the fully open position and the other to operate at the fully closed position:

a. Both limit switches must be open for all intermediate disconnecting switch positions.

b. The status of each limit switch must be displayed on LCMS HMI and SCADA screen where indicated on the Contract Drawings.

c. Wire to a terminal block with 2000 V insulated #12 AWG stranded cables.

d. Wire to terminal block all external control conductors, including spares.

5. Provide locks on switch handles to allow switches to be locked in closed or open position.

6. Interlocking system, where indicated, must be self-supervising and be of fail-safe design; it must not permit switch operation in the event of a component failure. System design must comply with NEMA ICS 1 and ICS 2.

7. Provide mechanical interlock as indicated.

8. Anti-condensation heaters:

   a. Provide a thermostatically controlled heater in each switch enclosure.

   b. Operating voltage for the heating strip must not exceed 50 percent of heater rated voltage.

   c. Provide an individual thermostat for each switch enclosure containing a heater.

   d. Locate thermostat in a general area of each cubicle so that cool air at the lower portion of the enclosure can be sensed by the thermostat.

   e. Power heaters from 120 Vac auxiliary power system using an isolation transformer, as specified in Section 34 21 16.21 - TPSS Control Power, and wire using 2000V insulated wiring.

   f. Locate heaters and thermostat away from power cables and energized parts. Do not use grounded parts or guards.

9. Cable Termination:

   a. Provide line and load side disconnecting switch terminals with silver-plated copper bus complying with ASTM B187/B187M to accommodate the number and size of DC power copper cables, entering from below or from above, as indicated.

   b. Provide switch terminals with the proper size and quantity of NEMA terminal lugs to accommodate the maximum number of cables as shown on Issued for Construction drawings.

10. Bus:

   a. Electrolytic copper bus bars, rated for 50 degree C rise over 40 degree C ambient minimum.

   b. Bolted silver-plated joints.

11. Contact Transfer IED:

   a. Comply with the requirements in Section 34 21 16.23 - TE Substation LCMS and IED, for contact transfer device IED. Provide number of IED units indicated on the Contract Drawings.

   b. Locate IED away from power cables and energized parts do not use grounded parts or guards.

PART 3 - EXECUTION

3.01 INSTALLATION

A. Install disconnect switches at locations shown on Contract Drawings.

B. Install switches in accordance with approved manufacturer's instructions. Provide anchor bolts and anchorage items as required.

C. Coordinate installation with design of disconnect switch supporting hardware, feeder cable installation, support, and routing, and ensure designs are fully integrated with the installed attachments.

D. Attach operating mechanisms such that handles do not intrude into the track clearance envelope:

1. In general, operating handle must move away from or parallel to track.

2. Install switch such that a person operating the switch will not be in danger from passing vehicles.

3. If doubt exists about which way to face a disconnect switch, obtain clarification from Sound Transit.

E. Install operating handle at a height that allows switch to be operated easily by a person standing on the ground.

F. Adjust switches after installation to provide proper mating of the blades and easy alignment and operation.

G. Provide cable clamps online and load side of switches to prevent stress on connectors and switch jaws.

H. Install each IED with DC disconnect Switch enclosure and wire switch auxiliary contacts to IED digital outputs. Interconnect IED with its paired IED in the traction power substation with a fiber optic cable for transferring switch auxiliary contacts to LCMS inputs.

I. Power IED from a dedicated 125 VDC branch circuit breaker in the traction power substation as indicated on the Contract drawings.

END OF SECTION

SECTION 34 21 16.17

PREFABRICATED TRACTION POWER SUBSTATION BUILDING

PART 1 - GENERAL

1.01 SUMMARY

A. Section includes:

1. Requirements for Pre-fabricated Traction Power Substation (TPSS) buildings, including the following:

a. Building structure.

b. Insulated walls, ceiling and floor.

c. Heating, Ventilating and Air Conditioning (HVAC) system in buildings.

d. See Section 34 21 16.25 - Traction Power Substation Installation, for building appurtenances such as dielectric walls and floor, and required components not included in other Sections.

e. Substation Lighting, for interior and exterior lights

f. Basement hatch and ladders

1.02 REFERENCES

A. This Section incorporates by reference the latest revisions of the following documents:

1. (AISC):

a. AISC 303 - Code of Standard Practice for Steel Buildings and Bridges.

b. AISC 360 – Specification for Structural Steel Buildings.

2. American Society of Heating, Refrigerating and Air-Conditioning Engineers (ASHRAE):

a. ASHRAE 52.2 - Method of Testing General Ventilation Air-Cleaning Devices for Removal Efficiency by Particle Size.

3. ASTM International (ASTM):

a. ASTM A384/A384M - Standard Practice for Safeguarding Against Warpage and Distortion During Hot-Dip Galvanizing of Steel Assemblies

b. ASTM A653/A653M - Standard Specification for Steel Sheet, Zinc- Coated (Galvanized) or Zinc-Iron Alloy-Coated (Galvannealed) by the Hot-Dip Process.

c. ASTM E84- Standard Test Method for Surface Burning Characteristics of Building Materials.

4. National Electrical Manufacturers Association (NEMA):

   a. NEMA 250 - Enclosures for Electrical Equipment (1000 Volts Maximum).

   b. NEMA ICS 6 - Industrial Control and Systems: Enclosures.

5. Illuminating Engineering Society (IES):

   a. IES LM-79 Approved Method: Electrical and Photometric Measurements of Solid-State Lighting Products.

   b. IES LM-80 Approved Method: Measuring Luminous Flux and Color Maintenance of LED Packages, Arrays and Modules.

6. National Fire Protection Association (NFPA):

   a. NFPA 70 National Electrical Code.

7. Underwriters Laboratories Inc. (UL):

   a. UL 924 Standard for Emergency Lighting and Power Equipment.

   b. UL 8750 Standard for Light Emitting Diode (LED) Equipment for Use in Lighting Products.

8. State of Washington:

   a. Washington Administrative Code (WAC) Chapter 296-150F – Factory built Housing and Commercial Structures.

   b. International Energy Conservation Code.

   c. International Mechanical Code (with amendments by Authority Having Jurisdiction).

   d. Washington State Energy Code.

9. Contractor must inspect foundation for proper fit prior to manufacture. Contractor is solely responsible for proper fit of substation on foundation.

1.03 SUBMITTALS

A. Submit:

1. Product Data:

   a. HVAC unit, including HVAC controller and a description of how units will meet specified requirement to alternate operation every two weeks.

   b. Paint. Refer to Section 34 21 27 - TES Metal Fabrication and Finishes.

   c. Substation Lighting:

      1) Document that proposed luminaires fully comply with Contract Documents.

      2) Indicate luminaire construction, photometric performance, installation, and maintenance requirements.

3) Include clear and legible product specifications, drawings and illustrations of sufficient detail to describe the following:

a) Luminaire housing, hardware, and finishes.

b) Light controlling elements.

c) Electrical components and provision for conduit entry.

d) Support details: Indicate weight of luminaire.

2. Shop Drawings and Engineering Calculations:

a. Building Structural: Structural engineering calculations and drawings, sealed by a professional engineer registered in the State of Washington, and design data:

1) Structural engineering design parameters and criteria, including equipment weight and seismic criteria, deflection criteria suitable for the insulated floor, including snow, wind and ice loading.

2) Structural engineering calculations for sizing structural members, calculating maximum allowable bending, torsion, and flexure during installation and transportation, sizing and design of lifting eyes under worst case conditions, including snow, wind and ice loading.

3) Sealed structural shop drawings for fabrication including a scaled floor plan, and wall and roof plans, showing equipment design, outlines, interlocking panels and weights, penetrations for conduits, ventilation ducts, door frames and openings.

4) Sealed structural shop drawings showing details of fabrication including door construction and frames, joints, welds, and bolted connections.

b. HVAC: Mechanical engineering calculations and drawings, sealed by a professional engineer registered in the State of Washington, and design data:

1) Sealed mechanical engineering calculations for sizing air conditioning, ventilation and heating per the specified criteria.

2) Sealed mechanical engineering shop drawings suitable for installation and fabrication of the mechanical equipment including air conditioning, ventilation and heating. Drawings must include a scaled floor plan showing equipment outlines and weights, penetrations for conduits and ducts.

c. Railings, stairways, and ladders: Drawings showing details of fabrication, including welding.

d. Substation lighting: Lighting layout with proposed luminaires indicated by manufacturer and model number. Show the calculations that specified lighting levels are achieved with proposed luminaires.

3. Qualifications Statements: For manufacturer, erectors and welders.

1.04 QUALITY ASSURANCE

A. Manufacturer Qualifications: Manufacturer of the pre-fabricated metal buildings must be performed by a company regularly engaged in the production of metal buildings for pre-fabricated traction power substations or similar applications, and as approved by Resident Engineer:

1. Manufacturer must have constructed at least 50 similar buildings in the last 10 years.

2. Manufacturer must be experienced in forming galvanneal conforming to ASTM A653/A653M with minimum coating weight A25.

3. Once a manufacturer is approved, it must not be discharged or otherwise replaced by the Contractor without the written approval of Resident Engineer.

4. Engineering calculations must be performed by a professional engineer registered in the State of Washington.

B. Welding Qualifications: All welding must be performed by Certified Welders. Refer to Section 34 21 27 - Metal Fabrication and Finishes, for detailed requirements.

PART 2 - PRODUCTS

2.01 BASE GENERAL REQUIREMENTS

A. The Traction Power Substation building must be a weatherproof, insulated, walk-in unit suitable for the installation and housing of all specified Substation equipment.

B. Access to the Substation equipment will be from the sides and the rear. The construction of the building will allow the removal of all major equipment from outside or inside of the Substation building without disassembly of the equipment.

C. Contractor must inspect foundation for proper fit prior to manufacturing the TPSS. Contractor is solely responsible for proper fit of substation on foundation.

D. Size: Traction power building size must be identical to the existing typical Link mainline traction power building and constructed from approved shop drawings, unless otherwise shown on Contract Drawings.

2.02 BUILDING DESIGN

A. Design substation building to withstand live roof loading, wind loading, and seismic loading and the stresses caused during loading, transportation, unloading, and installation.

B. Comply with the following codes and standards; if conflicts exist, the most restrictive requirements must apply:

1. AISC 303 and AISC 360.

2. Traction power substation building must meet standards of Washington Department of Labor and Industries Factory Assembled Structures (FAS) and bear the required FAS Insignia.

3. Building thermal insulation level must comply with Washington State Energy Code for Climate Zone 1.

C. Base:

1. Fabricate from structural steel beams and steel cross members welded into a rigid unit of adequate strength to allow lifting of the complete assembly including all equipment.

   a. Structural steel:

      1) Hot-dip galvanize before welding in accordance with Section 34 21 27 - Metal Fabrication and Finishes.

      2) Avoid using structural steel members with nonsymmetrical sections to minimize warpage and distortion during hot-dip galvanizing, as recommended by ASTM A384/A384M.

   b. Welds:

      1) Mask steel in weld areas before galvanizing in accordance with Section 34 21 27 - Metal Fabrication and Finishes.

      2) Coat welds as required in Section 34 21 27 - Metal Fabrication and Finishes.

D. Design the base to permit natural ventilation between Substation enclosure and concrete foundation to prevent condensation and buildup of water.

   1. Grounding Pads:

      a. Provide a copper grounding pad at each corner of the building, bonded to the interior of the steel base, for connection of a 2-hole cable lug.

      b. Provide openings in floor for access, with removable cover plates as described below in Article titled "Floor."

         1) Size: Minimum 10 inches x 12 inches.

         2) Location: Coordinate access openings with equipment layout such that no part of the minimum size opening will be obstructed by the equipment. Openings in equipment provided for cable entrance may also be used for access to grounding pads.

      c. Connect each grounding pad to a substation ground bus, as specified in Section 34 21 16.25 - Traction Power Substation Installation.

   2. Lifting Lugs:

      a. Provide removable lifting lugs securely bolted to the base, suitable for safely lifting and placing the building, complete with equipment, on its foundation without structural, mechanical or electrical damage.

      b. Lifting lugs must be designed to prevent damage to exterior paint surfaces.

      c. The lugs must be constructed such that they will fit on any housing furnished under this Contract. Provide one complete set of lifting lugs to Sound Transit.

E. Floor:

   1. Material: Steel plate, minimum 1/4-inch thick.

   2. Fabrication: Stitch-welded to the base.

3. Strength: The floor must withstand the weight of the heaviest circuit breaker, transformer or other equipment item which may have to be moved along the floor, without significant deflection.

4. Cutouts:

a. Provide as required for conduit entry, cable entry, substation grounding and hatch for access to vault.

b. Cover openings not covered by equipment with removable cover plates:

1) Insulated floor: 1/4-inch plastic or epoxy with non-metallic hardware to latch it in place.

2) Non-insulated floor: 11 gage steel with stainless steel hardware to latch it in place.

F. Walls:

1. Exterior walls:

a. Material: Sheet steel panels, of a grade to be determined by Contractors structural design engineer.

b. Thickness: Minimum 11 gage (base metal only).

c. Coating:

1) Galvanneal meeting the requirements of ASTM A653/A653M with minimum coating weight A25.

2) Galvanneal must not be quenched by the steel manufacturer or galvanizer or chemically treated in a way that inhibits powder coating.

d. Interlock adjoining panels with J-type interlocking, as indicated in Figure 1, below.

e. Seal seams with manufacturer recommended calking.

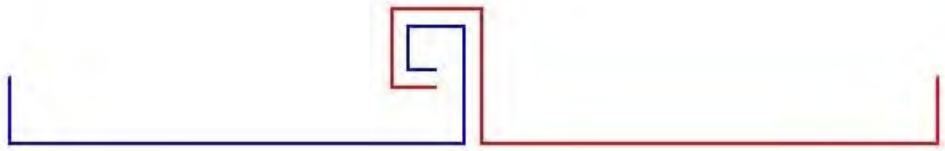

Figure 1: Cross Section Wall Panels J-Type Interlocking

2. Interior walls:

a. Material: Same as exterior walls, above.

b. Coating: Same as exterior walls, above.

c. Thickness: 14-gage (base metal only).

G. Roof:

1. Shed type, with a pitch as shown on the Contract Drawings, fabricated from interlocking sheet steel panels:

a. Material: Same as exterior walls, above.

b. Coating: Same as exterior walls, above.

c. Thickness: Same as exterior walls, above.

d. Interlocking: J-type, with standing seams and rain caps over seams, as indicated in Figure 2, below.

e. Seal seams with manufacturer recommended calking.

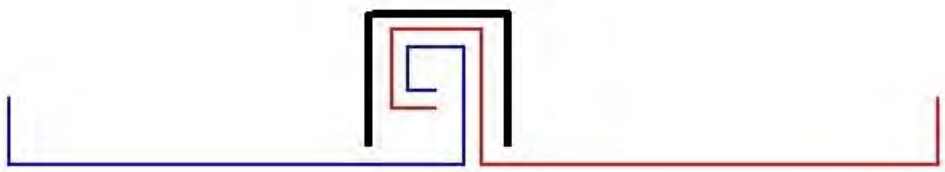

Figure 2: Cross Section Roof Panels Standing Seams With Rain Cap

2. Roof penetrations:

a. Must be used only with approval of the Engineer.

b. If used, must be minimal with each flashed and waterproofed.

2.03 BUILDING COMPONENTS

A. Gutters and Downspouts:

1. Provide one gutter on each long side of the enclosure; provide one downspout at each end of each gutter, a pair for each gutter.

2. Material: Same as exterior walls, above.

3. Coating: Same as exterior walls, above.

4. Thickness: Same as exterior walls, above.

5. Design:

a. Size with sufficient capacity to handle the historical maximum volume of rain for the City.

b. Angle downspouts at the bottom and extend far enough from building to divert water minimum 12 inches beyond outside of foundation wall.

B. Entry Doors:

1. Provide a minimum of two entry doors, located as indicated on the Contract Drawings.

2. Material: Minimum 14 gage sheet steel, galvannealed in accordance with ASTM A653/A653 with minimum coating weight A40.

3. Insulation: R value in accordance with applicable energy code.

4. Size: Not smaller than those shown on the Contract Drawings.

5. Hinges: Stainless steel with stainless steel hinge pins.

6. Panic hardware: One or three point crash-bar safety latches to permit opening doors from within under all conditions.

7. Locks: Self-locking, tamper proof locks integrated with entry door handles:

   a. All locks must be keyed alike.

   b. Sound Transit to provide keying requirements.

   c. Provide two keys for the building.

8. Door Closer:

   a. Heavy duty, highly corrosion resistant; all external body components of aluminum, zinc alloy or stainless steel material with stainless-steel fasteners.

   b. Must close door firmly and have hold-open position.

9. Sealing:

   a. Doors must be tightly sealed with neoprene gaskets.

   b. Secure seals to the doors so as to allow easy replacement.

   c. Design of doors must prevent intrusion of water around the seams.

10. Warning signs: Provide a sign on each entry door stating “DANGER: HIGH VOLTAGE” and “KEEP OUT”.

C. Exterior Equipment Access Doors:

1. Provide hinged doors where shown on Contract Drawings.

   a. Equipment doors must allow access to the rear of the ac switchgear, transformer, rectifier, and dc switchgear from the outside of the substation for regular maintenance.

   b. Opening the transformer rear doors must allow removal of the transformer as a unit from the outside of the substation.

2. Material: 11 gage sheet steel, galvannealed in accordance with ASTM A653/A653M.

3. Provide door stiffeners as required to improve rigidity of door panels.

4. The exterior equipment access doors must meet or exceed the requirements of NEMA ICS 6 for weatherproof NEMA 250 Type 4 enclosures.

5. Latches: 3-point, padlockable, heavy duty stainless steel switchgear type.

6. Hinges:

   a. Stainless steel, with stainless steel hinge pins and hardware.

   b. Provide a minimum of three concealed hinges.

7. Door gaskets: Neoprene. Secure seals to the doors so as to allow easy replacement.

8. Door stop: Provide on the bottom of each door to hold it in the open position:

   a. Provide ANSI Device No.33 microswitch on doors. Upon opening of a door, provide the followings:

      1) Alarm to LCMS and SCADA

      2) Trip the ac lockout relay, ANSI Device 86.

9. Padlock:

   a. Provide one heavy-duty master-keyed padlock for each external door.

   b. Sound Transit to provide keying requirements.

   c. Padlock must be located at working height referenced to actual final grade elevation at site.

D. Removable Exterior Panels:

1. Weight: Less than 75 lb.

2. Joints: Sealed and gasketed similarly to doors.

3. Bolts: Tamper proof.

E. Steps and Railings: Provide galvanized steps, ladders, and railings. Steps may be poured in concrete.

F. Thermal and Acoustical Insulation:

1. General Requirements:

   a. Insulating materials must have a certified classification of "noncombustible" as defined by ASTM E84.

   b. Flame proofing of insulating materials will not be acceptable. Proof of certification must be by one of the following:

      1) UL label or listing.

      2) National Bureau of Standards test results.

      3) Certified test report from a nationally recognized testing laboratory.

2. Subfloor Insulation: Solid insulating panels or spray foam insulation

G. Vault Hatches:

1. Provide two hatches, one on the AC side and one on the DC side.

2. Hatches must be able to hold the combined weight of substation equipment, maintenance staff, and the tools required to remove the equipment.

3. Hatch must be flush with the floor.

4. Hatches must be sized to allow for WAC 296-876 (Ladders, Portable and Fixed) and WAC 296-880 (Fall Protection) requirements to be met.

5. Hatches must have gas struts that reduce the lifting force to 45lbs.

6. Hatches must have a stay to keep the hatch open and reduce strain on the hinges.

H. Vault Ladders:

1. Compliant with WAC 296-876 and ANSI 14.3.

2.04 HEATING, VENTILATING AND AIR CONDITIONING (HVAC) SYSTEM

A. Provide a thermostatically controlled HVAC system with HVAC controller for three air conditioners.

B. General Requirements:

1. Provide three wall-mount HVAC units.

2. The HVAC units must be suitable for installation against a solid barrier not more than 6 feet away. Condenser air must be exhausted in a way that the exhausted air will not be recirculated back to the intake/economizer of the unit.

3. HVAC units must be capable of maintaining the interior temperatures specified above at ambient temperatures specified in Section 34 21 10 – Traction Electrification System General Requirements.

4. Units must be identical to each other.

5. Maintain positive pressure within the space in all operating modes.

6. HVAC units are powered by the TPSS auxiliary power transformer.

C. Design Criteria:

1. Heat gain: Design for the following simultaneous conditions:

a. 100 percent loading of the traction power transformer-rectifier unit.

b. Exterior design conditions per International Energy Conservation Code with City amendments.

c. Maximum solar heat gain.

2. Temperature: Maintain the interior temperature between 55 degrees F and 76 degrees F under all operating conditions.

D. HVAC Units:

1. UL listed, AHRI performance certified, meeting minimum efficiency requirements of the Washington Energy Code.

2. Enclosures: Stainless steel.

3. TPSS auxiliary Provide coated condenser coils.

4. Finish color: Match finish color of substation enclosure or use stainless steel as approved by Sound Transit.

E. Size auxiliary power transformer to power all HVAC units simultaneously and continuously at their 100 percent rating.

F. Ventilation system: Provide sufficient air changes to prevent battery-evolved hydrogen gases from exceeding a 1 percent concentration level.

G. Heating: Design based on conduction and infiltration heat loss with exterior design conditions per International Energy Conservation Code with City amendments and substation de-energized (no heat gain from interior equipment).

H. Air Intakes:

1. Provide outside air sensors in the fresh air intake duct.

2. Provide ducts either on air intake or condenser exhaust to prevent air recirculation from unit exhaust.

3. Grill: Provide over filter to prevent entrance of foreign objects.

4. Filters:

a. Provide MERV 11 filtration per ASHRAE 52.2.

b. Exterior: Provide tamper-proof hardware for filters located on exterior of enclosure.

c. Provide filter clogged alarm device wired to LCMS.

I. Alarms:

1. If substation interior temperature reaches 85 degrees F send alarm to LCMS and SCADA. Temperature alarm set point must be field adjustable.

2. If any HVAC filter clogs send alarm to LCMS and SCADA.

3. If any HVAC unit fails send alarm to LCMS and SCADA.

J. Economizer Cycle Cooling:

1. Provide HVAC units in conjunction with an economizer to allow TPSS interior cooling using only exterior air when that air is less than 70 degrees F.

2. Provide gasketed, motorized dampers to seal the enclosure when economizer cooling is not possible.

K. HVAC Controller:

1. Provide an HVAC controller that complies with the requirements in this Section, and has the following features:

a. Field controllable.

b. Includes an HMI displaying current temp, programmable schedule, 12/24 hour clock, and on screen programming.

c. Programmable.

d. Produced by a manufacturer whose main line of products is HVAC.

e. Compatible with heating and cooling and multi-stage fan systems.

2. Maintain the interior temperature between 55 degrees F and 76 degrees F under all operating conditions.

3. Provide internal ambient temperature sensor at the control power battery bank location.

4. Provide controls to manually and automatically alternate the HVAC units every 2 weeks to minimize wear and tear on any unit.

L. Installation: Provide condensate drain pipe per International Mechanical Code with City amendments.

2.05 SUBSTATION LIGHTING COMPONENTS

A. Performance criteria:

1. Each substation must have interior and exterior lighting to provide the specified minimum light levels.

2. Minimum Lighting Levels:

a. Interior: 70 footcandles at 30 inches above the aisle floor.

b. Exterior: 2 footcandles, measured at ground level.

c. Emergency Lighting: Minimum 1 footcandle at 30 inches above the aisle floor.

d. Minimum lighting levels must be maintained throughout the TPSS. Average lighting level must not be used to meet this requirement.

B. Luminaires:

1. Interior of Substation Building:

a. Type: Ceiling mounted, linear LED luminaire.

b. Lens: Wraparound style, polycarbonate or high-impact acrylic diffuser, UV resistant, with even light distribution, secured to the housing with fasteners.

c. Standards: Complying with UL 8750.

d. Correlated Color Temperature (CCT): 5000-6000 K.

e. LED Driver: Field replaceable.

f. MTBF: Minimum 50,000 Hours.

g. Acceptable Manufacturer/ Product: Kenall N1048 Series, Lithonia FEM LED or approved equal.

h. Provide three-way switches for interior lighting that allows them to be turned on and off on either side of the TPSS.

2. Exterior of Substation Enclosure:

a. General:

1) Wall-mounted, vandal-resistant, LED luminaire, full cut-off type.

2) UL listed for 40 degrees C maximum ambient and wet locations with IP66 ingress rating. Luminaire must comply with IES LM-79 and LM-80 and be DLC (Design Lights Consortium) qualified.

b. Housing:

1) Die-cast aluminum, with a hinged door secured by captive stainless steel, tamper-resistant screw.

2) Housing must incorporate cooling fins specifically designed for cooling LED light source and driver.

3) Approximate dimensions of complete luminaire: 6 inches wide x 7 inches high x 4 inches deep, including back-box. Provide with wire guard.

c. Finish: Epoxy or polyester powder-coat paint, white, or as directed by Resident Engineer.

d. Optical:

1) Sealed LED compartment with anodized, mirror-finish, forward-throw reflector, high-output bright-white (5000K CCT) LED, impact resistant tempered glass lens and silicone sealing gaskets.

2) Luminaire must deliver at least 1400 lumens, be rated full-cutoff with BUG rating B1-U0-G0 or better, and be suitable for wall-mounting 8 feet or greater above surrounding surface.

e. Electrical:

1) Integrated electronic LED driver with integral surge protection must be mounted to housing for effective cooling.

2) Provide luminaires with integral photocontrol or a single NEMA-style, aimable photocontrol wired in luminaire circuit.

f. Acceptable Manufacturer/ Product: Lumark XTOR2A-WT-WG or approved equal.

3. Lighting Within Substation Vault:

a. General: Ceiling mounted outdoor general purpose gasketed, vapor-tight LED luminaire with corrosion-resistant aluminum body, frosted glass diffuser, and metal guard.

b. Acceptable Manufacturer/Product: Lithonia OLVTCM or approved equal.

c. Provide three-way switches for vault lighting that allows them to be turned on and off from upstairs and the vault.

4. Emergency Lighting:

a. General:

1) Self-contained units containing lamps, battery, battery charger, controls, test switch, and status indicator.

2) UL 924 listed.

b. Housing: UV-stabilized, high impact, clear 0.120-inch polycarbonate or 18-gage steel, with a baked enamel finish.

c. Lighting Heads: High-output 6.5 W LED lighting heads; minimum two lamps per unit.

d. Battery:

1) Nickel-cadmium, 12 V, rechargeable, sealed, maintenance-free.

2) Capacity: Must supply rated lamp load for 1-1/2 hours, minimum.

3) Life expectancy: 10 years.

e. Battery charger:

1) Solid-state, current-limited, temperature-compensated, short-circuit proof, and reverse-polarity protected with plus-or-minus 1 percent regulation.

2) Charger must automatically maintain battery in fully-charged float condition and be capable of providing full recharge in 12 hours.

f. Unit controls: Must energize lamps automatically upon failure of ac power supply and disconnect load before battery low-voltage limit is reached.

g. Acceptable Manufacturer/ Product: Kenall METEL-series LED, or approved equal.

5. Lighting Inside Equipment Enclosures:

a. General: Ceiling and side mounted, LED strip luminaire with clear, prismatic diffuser complying with UL 8750.

b. Minimum illuminance: 30 footcandles at 1.5 feet.

c. Correlated Color Temperature: 5000-6000 K

d. Size: 30 centimeters or 12 inches long with 12 LEDs.

e. MTBF: 50,000 Hours

f. Acceptable Manufacturer/Product: LBFA Lux Bar LED light bar, or approved equal.

PART 3 - EXECUTION

3.01 BUILDING INSTALLATION

A. Install the Substation building on the existing building foundation as specified in Section 34 21 16.25 - Traction Power Substation Installation.

END OF SECTION

SECTION 34 21 16.21

TPSS – CONTROL POWER

PART 1 - GENERAL

1.01 SUMMARY

A. Section includes:

1. Requirements for the following:

a. DC control power for Traction Power Facilities.

b. Isolation transformer for AC loads in DC equipment.

c. Low voltage AC generator connections for prefabricated TPSS's control power system.

1.02 REFERENCES

A. Reference Standards: Applicable provisions of the most recent adopted editions of the following standards must apply to the work of this Section:

1. Institute of Electrical and Electronics Engineers (IEEE):

a. IEEE 1115 - Recommended Practice for Sizing Nickel-Cadmium Batteries for Stationary Applications.

2. National Electrical Manufacturers Association (NEMA):

a. NEMA 250 - Enclosures for Electrical Equipment (1000 Volts Maximum).

b. NEMA PB 1 – Panelboards.

c. NEMA PE 5 - Utility Type Battery Chargers.

3. Underwriters Laboratory (UL):

a. UL 67 – Panelboards.

b. UL 489 - Molded-Case Circuit Breakers, Molded Case Switches, and Circuit-Breaker Enclosures.

c. UL 1008 - Transfer Switch Equipment.

1.03 SUBMITTALS

A. Product Data: Submit for the following items unless otherwise specified:

1. Batteries.

2. Battery spill containment

3. Battery charger/eliminator.

4. Disconnect switches in accordance with Section 26 28 15 - Enclosed Switches and Fuses.

5. Manual Transfer Switch.

6. Isolation transformers.

B. Shop Drawings: Submit shop drawings and electrical diagrams as follows:

1. Panelboards.

a. Show general arrangement, location and identification of the enclosure.

b. Identify each circuit.

c. Show location and identification of terminals.

d. Show location of barriers.

e. Provide wiring diagrams.

2. Circuit breakers.

a. Show circuit for which intended, voltage ratings, insulation level, current rating and interrupting ratings.

C. Engineering Calculations: Submit engineering calculations for sizing battery, battery charger/eliminator, isolation transformers, and dc power supplies for each location.

D. Test and Evaluation Reports: Submit test procedures and test reports in accordance with Section 34 21 16.11 - Traction Power Substation Testing.

E. Signage:

1. Signage with procedure for disconnecting battery from control power system.

2. Signage with procedure for transferring control power AC source between generator connection and regular AC panel, including load shed scheme.

F. Operation and Maintenance Data:

1. Description of the DC control power system components.

2. Manufacturer's operating and maintenance instructions, parts lists, illustrations and diagrams for components.

3. Recommended list of spare parts.

4. Wiring diagram for overall system, battery charger/eliminator and generator connection system including manual transfer switch.

G. Warranty Documentation.

1.04 TOOLS

A. Furnish one set of tools for battery maintenance for each TPSS.

B. Tools must be for normal operation and maintenance of the batteries and must include the following:

1. One cell lifting sling complete with strap and spreader bar.

2. One battery log book.

3. One quart of terminal grease.

4. One set of tools for maintenance.

1.05 QUALITY ASSURANCE

A. Control power equipment, including battery, battery charger/eliminator, disconnects, panelboards, fuses, and miscellaneous equipment must be UL labeled or certified as conforming with the requirements of UL and IEEE or ANSI or by an Independent Testing Laboratory recognized by the State of Washington.

1.06 DELIVERY, STORAGE AND HANDLING

A. Delivery: Ship batteries separate from the TPSS building.

1.07 WARRANTY

A. Manufacturer's Warranty - Batteries: Warrant batteries to be free from defects in materials and workmanship for 5 years and to have at least 80 percent of rated capacity for 10 years from the date of acceptance of the equipment.

PART 2 - PRODUCTS

2.01 DC CONTROL POWER

A. DC control power voltage must be 125 Vdc for all TPSSs.

B. DC system must consist of batteries, battery charger/eliminator, battery racks, DC distribution panelboard and accessories or DC power supply units and accessories to provide control power for the Traction Power Facilities.

C. DC portion of the system must be electrically isolated from ground.

D. Battery and its associated charger/eliminator must be connected in parallel.

E. Battery may be used to supply heavy short-time current demands.

F. When the AC supply power to the charger is interrupted, the battery must supply all the required power for the specified load duty cycle.

G. Provide DC monitoring relay and connect across the main DC bus.

1. When main DC bus voltage drops to 90 percent of its nominal voltage, an alarm must annunciate low auxiliary voltage and send to Link Control Center (LCC) via LCMS & SCADA.

2. Set relay to drop out at 80 percent of the nominal DC control voltage. When the relay drops, trip and lock out the AC main breaker, trip the DC feeder breakers (do not lock out), trip the main DC circuit breaker, annunciate a loss of DC control power, and send to LCC via LCMS & SCADA.

H. Provide a timer such that after a continuous 10 hours of battery charger outage, a timer must trip and lockout the Medium Voltage (MV) AC circuit breaker and main DC circuit breaker via the 86 relay, and trip and lockout the DC circuit breakers via the 186X relays.

2.02 BATTERIES

A. Manufacturers:

1. Storage Battery Systems: Valve Regulated Pocket Plate type, or approved equal.

2. ALCAD: Pocket Plate Range, HBL Vent Pro or approved equal.

B. Batteries must be designed to provide float service under normal usage for the intended duty cycle.

C. Battery must be valve-regulated pocket plate, Ni-Cad, heavy-duty design, sealed cell type, consisting of individual cells in molded cases for durability, high impact resistant.

D. Batteries and chargers/eliminators provided in this contract must be both physically and electrically interchangeable with Sound Transit existing Traction Power Facilities. Spares are to be shared between this contract and existing Link systems.

E. Size battery capacity in accordance with IEEE 1115.

F. Provide rated ampere-hours for a 10-hour discharge rate.

G. Base battery capacity on the following load duty cycle over a period of 10 hours at 40 degrees C ambient from a fully charged state with the battery charger out of service.

1. Normal continuous demand of substation auxiliary loads including protective devices, motor operated spring circuit breaker charger, tripping coil, indicating lights, lights inside switchgear, communication devices, Local Centralized Monitoring System (LCMS) and other substation auxiliary loads.

2. A trip and reclose cycle of one DC feeder breaker every hour.

3. A trip and reclose of the two AC breakers after 2 hours and again after 4 and 8 hours.

4. A trip and reclose of the main DC breaker every 2 hours.

H. Battery Cell Containers.

1. Containers must be plastic, sealed, heat-resistant, and flame retardant.

2. Containers must not deteriorate or become cloudy upon exposure to the electrolyte.

3. Cell covers must be cemented in place to provide a permanent leak-proof seal.

I. Battery Terminal Posts.

1. Sealed with compression rubber bushing and epoxy.

2. Identify clearly and permanently.

J. Configuration: Batteries may be either stacked vertically or mounted horizontally in a cabinet or battery rack.

K. Connections:

1. Connect batteries together into a battery bank using tin- or silver-plated solid copper bus bar and bolts, nuts and fasteners made of a material recommended by the battery manufacturer.

2. Cable jumpers are not permitted for battery connection.

3. Batteries must be replaceable individually or in pairs without disassembling the entire battery bank or stack.

L. Provide battery bank with a stainless steel nameplate. Provide the following information:

1. Manufacturer's name.

2. Battery and cell type.

3. Month and year of manufacture.

4. 1 minute, 1 hour and 8 hour ampere rating.

5. Ampere-hour capacity of C/8 (8 hours) and C/10 (10 hours).

2.03 BATTERY DISCONNECT SWITCH

A. Provide a two-pole fused knife switch in a dedicated NEMA 250 Type 12 enclosure accordance with the following to permit isolation of the battery from the loads and battery charger.

1. Fusible Switch Assemblies.

a. Quick-make, quick-break, load interrupter enclosed knife switch with externally operable handle interlocked to prevent opening front cover with switch in ON position

b. Suitable for use on ac or dc systems

c. Handle lockable in OFF position

d. Fuse Clips: Suitable for Class R or J fuses with fuse rejection devices installed

2. Fuses:

a. Fuses, 600 A or less.

1) UL 248-8, Class J or UL 248-12 Class RK1 or as indicated on Contract Drawings.

2) 600 V rated, one-time use, time delay, current-limiting type

B. Circuit breaker in DC distribution panelboard for battery isolation purpose is prohibited.

C. Signage: Provide signage above dedicated enclosure to clearly describe the procedure for disconnecting battery from control power system.

D. Coordinate fuse rating and switch size with dc circuit breaker in battery charger.

2.04 BATTERY CHARGER/ELIMINATOR

A. Provide battery charger/eliminator with the following characteristics:

1. Completely automatic, fully regulated, two-stage, silicon-controlled-rectifier type complying with NEMA PE 5, except as modified herein.

2. Sufficient capacity to support all normal loads and simultaneously recharge the batteries from 1.75 V per cell to 85 percent of battery capacity within 8 hours.

3. Provide temperature compensation function.

4. Provide electrical isolation between the input and output.

5. Provide an output circuit breaker.

6. The battery charger must be cooled by natural air convection.

7. Audible Noise Level: Less than 55 dbA measured in accordance with NEMA PE 5.

8. Both physically and electrically interchangeable with one of Sound Transit existing types in Traction Power Facilities, except Central Link. Spares are to be shared between this contract and existing systems.

B. Output voltage must provide a float charge voltage in accordance with the battery manufacturer's recommendation.

C. Current Limiting:

1. For load or fault conditions of very low load resistance (such as a dead short), the battery charger must "fold back" (limit both the output current and voltage).

2. Current limit must be factory preset to provide the capacity described above and be field adjustable from 90 percent to 110 percent of the factory preset value.

3. Normal operation must automatically resume when the overload or short circuit is removed.

D. Enclosure: NEMA 250, Type 12. Provide with a hinged front panel and a minimum of two latches.

E. Battery charger/eliminator must be powered from the local AC panelboard via a lockable circuit breaker with lock.

F. Furnish battery charger with an output voltmeter and an output ammeter.

1. Type: 3.5 digit LED or LCD type.

2. Accurate to 1 percent of the full-scale reading.

3. Mount to the charger enclosure front panel.

G. Provide ground fault protection on the battery charger output by verifying the positive and return currents sum to zero.

1. The sensitivity of the ground fault protection must be field adjustable to eliminate nuisance failures.

2. Protection must shunt trip the charger output circuit breaker.

H. At a minimum, the following statuses must be detected and annunciated on both LCMS and SCADA as a battery charger failure:

1. Loss of DC output.

2. Loss of AC input supply.

3. Ground fault.

4. Control Voltage Overvoltage.

5. Low DC output voltage.

6. Main DC circuit breaker position.

2.05 ISOLATION TRANSFORMER

A. Size according to load plus 20 percent.

B. Single phase 120/240V primary - 120/240V secondary.

C. UL listed, NEMA Type 3R encapsulated enclosure.

D. Electrically shielded.

E. UL Class 200 degrees C insulation system, 115 degrees C temperature rise under full load.

2.06 DC DISTRIBUTION PANELBOARD

A. NEMA PB 1, UL 67.

B. Designed for two-wire, 125 Vdc ungrounded power distribution service.

C. Enclosure: NEMA 250 Type 12, fabricated from galvanized steel, surface-mounted.

D. Finish: Powder coat

E. Cover and Trim.

1. Designed for surface mounting.

2. Hinged front cover with a minimum of two latches.

3. Dead front.

F. Bus Bars: Copper with the current density limited to 1000 A per square inches.

1. Provide a separate ground bus with full rating.

G. Main incoming terminals must be for connection of batteries and battery charger.

H. Provide surge protection device rated for required application with minimum 25 kA peak surge current capacity. Provide status LED.

I. Circuit Breakers: UL 489:

1. Two-pole.

2. Bolt-on type.

3. Trip mechanism must be thermal-magnetic and trip-free.

4. Breaker “on”, “off,” and “tripped” positions must be clearly indicated by the handle position.

5. Provide main circuit breaker with auxiliary contacts for annunciation:

a. Contacts must be factory wired to a terminal strip for connection to the LCMS and SCADA.

b. Annunciate tripped or open main circuit breaker.

6. Branch Circuit Breakers: Minimum of 100 A frame size, minimum 10,000 A interrupting rating at 250 Vdc.

J. Spares: Provide each panelboard with 10 percent spare branch circuit breakers and space for the addition of a minimum of four future two-pole branch circuit breakers.

2.07 LOW VOLTAGE GENERATOR CONNECTIONS

A. Manual Transfer Switch:

1. Basis of Design: ASCO Power Technologies, or approved equal.

2. Rating: 240 Vac 150 A.

3. Listings: UL 1008 switch and NEMA 4X Stainless steel wall mountable enclosure with integrated thermostatically controlled heater.

4. Construction: No holes or knockouts except for conduit access to inside of TPSS, in a location that prevents water intrusion.

5. Color: Stainless steel with non-directional brushed finish

6. Voltage sensing for both normal and emergency, pilot lights to indicate manual transfer switch position, output contacts to indicate manual transfer switch position, and solid neutral with full rated terminal lugs.

B. Generator Plug:

1. Basis of Design: Cooper Crouse-Hinds Arktite brand part AREA10426, or approved equal.

2. Plug: 100 Amp, 2-inch hub, three-wire, four-pole, 600 Vac/250 Vdc.

3. Housing: Weatherproof, metallic with extra grounding contact.

C. Fused Disconnect: Comply with the following.

1. Fusible Switch Assemblies.

a. Quick-make, quick-break, load interrupter enclosed knife switch with externally operable handle interlocked to prevent opening front cover with switch in ON position

b. Suitable for use on ac or dc systems

c. Handle lockable in OFF position

d. Fuse Clips: Suitable for Class R or J fuses with fuse rejection devices installed

2. Fuses:

a. Fuses, 600 A or Less.

1) UL 248-8, Class J or UL 248-12 Class RK1 or as indicated on Contract Drawings

2) 600 V rated, one-time use, time delay, current-limiting type

D. The ratings of AC Panel, MTS, Generator Plug, and Fusible Disconnect must be coordinated for feasibility, consistency, and system stability. Provide TPSS AC Panel load-shed scheme.

PART 3 - EXECUTION

3.01 ISOLATION TRANSFORMER APPLICATION

A. Provide an isolation transformer in each location where an AC circuit is used to power equipment within DC equipment, such as DC switchgear heaters and rectifier fans. Additionally, provide isolation transformers for communications loads as shown in directive drawings.

B. Supply power as indicated.

3.02 INSTALLATION

A. Control power components must be installed in accordance with Section 34 21 16.25 - Traction Power Substation Installation.

B. Generator connection to be mounted integral to exterior of wall of substation as shown on Contract Drawings.

C. Connect battery charger ground terminal to substation main ground.

END OF SECTION

SECTION 34 21 16.22

TES – DC SURGE ARRESTERS

PART 1 - GENERAL

1.01 SUMMARY

A. Section includes:

1. Requirement for DC Surge Arrester requirements for traction power system.

1.02 REFERENCES

A. This Section incorporates by reference the latest revisions of the following documents:

1. ASTM International (ASTM):

a. ASTM B3 - Standard Specification for Soft or Annealed Copper Wire.

b. ASTM B172 - Standard Specification for Rope-Lay-Stranded Copper Conductors Having Bunch-Stranded Members, for Electrical Conductors.

2. Institute of Electrical and Electronics Engineers (IEEE):

a. IEEE C62.11 - Standard for Metal-Oxide Surge Arresters for AC Power Circuits (>1 kV).

1.03 SUBMITTALS

A. Submit:

1. Product Data:

a. Surge arresters.

b. Extra-flexible cable.

c. Insulated cable.

2. Shop Drawings: Shop drawings to scale showing:

a. Surge arrester installation.

b. Barriers if surge arresters are installed in vault under substation.

c. Shop drawing of the OCS SA grounding system to show designs, details, and calculations (either hand calculation or using engineering software) signed and sealed by a Professional Engineer licensed in the State of Washington.

3. Design Testing:

a. Submit a test procedure and test report.

b. Test to Failure:

1) Perform test on one surge arrester.

2) Mount surge arrester as it will be mounted on the substation, or in EOR approved alternate mounting arrangement, complete with cables connected.

3) Test to failure at two times energy rating and verify that arc clears and that enclosure does not fail catastrophically.

4. Production Testing:

a. Submit a test procedure and test report.

b. Energy Test:

1) Test each surge arrester and provide test report.

2) Test at 80 percent of rated energy.

c. Voltage Test (minimum requirement; additional tests may be performed):

1) Test each surge arrester after completion of the energy test and provide test report.

2) Test using a calibrated AC dielectric test set capable of reading leakage values.

3) Apply 1940 Vac for 30 seconds. Maximum allowable leakage current 15.0 mA.

Increase voltage to 2154 Vac for 5 seconds. Maximum allowable leakage current 30.0 mA.

PART 2 - PRODUCTS

2.01 MANUFACTURED PRODUCTS

A. DC Surge Arresters:

1. DC surge arresters must be the same as and interchangeable with existing DC surge arresters for ST East/Northgate Light Rail Link.

2. Basis of Design: Reuel, IMP-1 Metal Oxide DC Surge Arrester, as distributed by Balfour Beatty Rail, Inc.

3. DC surge arresters must be outdoor style, intermediate class and must be designed, constructed and tested in accordance with the general requirements of IEEE C62.11.

4. Surge arresters must be epoxy encapsulated and be of the metal oxide varistor type.

5. The arresters must be rated to withstand normal operating line transients of up to 5000 Vdc of either polarity to ground without damage.

6. The MCOV must be at least 1940V.

7. The arresters must limit the reverse voltage across the rectifier silicon diodes to a value less than 75 percent of the peak-reverse-voltage rating of the diode by limiting the rise of the transient on the positive to negative bus.

B. Grounding Conductors

1. Extra-flexible cable: Copper, 4/0 AWG, Class I stranding, minimum length 3 feet, bare or insulated, ASTM B3, ASTM B172.

2. Conductor connection:

a. Manufacturer: Burndy Hyground, Thomas & Betts, or approved as equal by the EOR.

b. Splice: C-type compression connector.

PART 3 - EXECUTION

3.01 TPSS INSTALLATION

A. Substation arresters must be connected between the negative bus and the ground mat and between each DC feeder termination in each circuit breaker cubicle and the ground mat as shown in the substation single line diagrams on the Issued for Construction Drawings.

B. Arresters in substation must not be mounted inside rectifiers or switchgear.

C. Surge arresters must be installed as shown on the Issued for Construction Documents in accordance with manufacturer's instructions:

1. DC surge arresters must be located in the vault below the DC switchgear, or in an area as directed, and must be separated from the DC switchgear enclosure such that the arresters will fail in a safe manner. Protection must be placed around the arresters so that in the event of a failed arrester, damage to any surrounding equipment will be minimized.

2. If located in vault below substation, surround surge arresters with clear polycarbonate barrier and suitable warning signs to prevent accidental contact by maintenance personnel.

3. Connect surge arrester to ground-mat pigtail using extra-flexible copper ground.

4. If ground-mat pigtail is too short, provide cable and splices to connect ground- mat pigtail to substation surge arrester extra-flexible copper ground.

3.02 OCS INSTALLATION

A. Surge arresters must be located on top of overhead contact system (OCS) poles at the end of each feeder cable from TPSS. Additional surge arresters must be located and connected to OCS in each direction on each section 1,000 feet from TPSSs, each Tie-Station, mid-section between TPSSs, and in areas of reduced clearances, such as overhead bridges and tunnel portals.

B. Mount in a position such that catastrophic failure must not permit a positive cable to contact a pole.

C. Install in accordance with surge arrester manufacturer's instructions.

D. Energized side of surge arrester: Provide 2.4 kV rated insulated cable from surge arrester to contact wire or switch.

E. Ground side of surge arrester: Provide extra-flexible cable, minimum three feet long, and connect to surge arrester.

F. Provide insulated or bare cable from extra flexible cable to ground. Provide splice between extra-flexible cable and cable to ground for a continuous path to ground.

G. Install conductors with a minimum number of bends. Bends must be no less than 8-inch radius.

H. Connect insulated ground cable to dedicated surge arresters ground system.

I. On elevated structure, run insulated ground cable to nearest support column and connect to dedicated surge arresters ground system.

END OF SECTION

SECTION 34 21 16.23

TES SUBSTATION LCMS AND IED

PART 1 - GENERAL

1.01 SUMMARY

A. Section includes:

1. Requirements for providing the Substation Local Centralized Monitoring System (LCMS) and the Intelligent Electronic Devices (IED) in each Traction Power Facility for overall substation control, protection, and monitoring.

2. LCMS includes the following:

a. Station Industrial Computer or equivalent PLC.

b. Human Machine Interface.

c. Local/remote control switch.

d. Terminal blocks for connection and interface with the SCADA system and other communications systems.

3. Integration of transfer trip with existing substations.

1.02 REFERENCES

A. Abbreviations and Acronyms:

1. HMI: Human Machine Interface.

2. IC: Industrial Computer.

3. IED: Intelligent Electronic Devices.

4. LCMS: Local Centralized Monitoring System.

5. NIC: Network Interface Controller

6. OT: Operational Technology

7. SCADA: Supervisory Control and Data Acquisition.

B. Definitions:

1. Intelligent Electronic Device: Refers to any digital or numerical based protection, metering, control, or monitoring device that has processing, recording and reporting capabilities used in traction power substations or DC section tie breakers.

C. Reference Standards: Applicable provisions of the most recent adopted editions of the following standards must apply to the work of this Section:

1. Institute of Electrical and Electronics Engineers (IEEE):

a. IEEE C37.90.2 - Standard for Withstand Capability of Relay Systems to Radiated Electromagnetic Interference from Transceivers.

b. IEEE 730 - Standard for Software Quality Assurance Plans.

2. International Electrotechnical Commission (IEC):

a. IEC 60255-21 Electrical Relays - Part 21: Vibration, Shock, Bump and Seismic Tests on Measuring Relays and Protection Equipment:

1) IEC 60255-21-1 Section One: Vibration tests (sinusoidal).

2) IEC 60255-21-2 Section Two: Shock and bump tests.

3) IEC 60255-21-3 Section Three: Seismic tests.

b. IEC 60529 - Degrees of Protection Provided by Enclosures (IP Code).

c. IEC 61000-4-3 Electromagnetic Compatibility (EMC) - Part 4-3: Testing and measurement techniques - Radiated, radio-frequency, electromagnetic field immunity test.

d. IEC 61131-2 Programmable Controllers - Part 2: Equipment Requirements and Tests.

1.03 SUBMITTALS

A. Submit

1. Product Data:

a. Industrial Computer.

b. Each IED.

c. Terminal blocks.

d. HMI and components.

e. System block diagram for each LCMS, additions and modifications to existing Substations.

f. Network equipment

2. Shop Drawings:

a. Shop Drawings of LCMS, including network drawings (interface to backbone and TPSS network), location plans, conduit and cable design, panel and rack elevation drawings, and one line.

b. Switchgear Internal devices/components layout plans.

c. Ladder logic diagrams, flowcharts and schematics with contacts and devices properly labeled for all ICs and HMI application software.

d. Wiring and interconnection diagrams.

e. Schematic diagram of software interlocking between traction power equipment.

f. Network configurations of all provided network devices. Includes all network switches and routers.

3. Bills of Material of LCMS.

4. Samples: Submit samples of the terminal blocks and control components, along with a description of the intended use of each component.

5. Test Procedures and Reports: Submit in accordance with Section 34 21 16.11 - Traction Power Substation Testing.

6. Submit a detailed design of the HMI User Management System.

7. Submit a detailed I/O list for SCADA, for each TPSS, cross passage and wayside equipment.

8. Submit a detailed description of software interlocking between traction power equipment.

9. Submit full-scale color views of each display.

10. Provide complete, Windows-based application software including source code and documentation for user's future maintenance, development, and restoration:

    a. Provide final version of firmware and documentation of firmware used on the Project.

    b. Provide all applicable parameterization files for media converters and gateways.

11. Qualifications Statements:

    a. Service Proven Design: Submit documentation to establish service proven history for both hardware and software. Include details of the application history, including number of units in operation, length of time, location and type of application.

12. Operation and Maintenance Data:

    a. Submittal information identified above.

    b. Manufacturer's operating and maintenance instructions, parts list, illustrations and diagram for components.

13. Recommended list of spare parts.

14. Submit complete relay and IED configuration files in vendor's native file format and in a readable format consistent with Sound Transit's existing files.

1.04 SOFTWARE INTELLECTUAL PROPERTY RIGHTS

A. All software developed under this Contract, including source code, must become the property of Sound Transit.

B. Relay settings and downloading interface software must be the property of Sound Transit.

C. IC/HMI/network application software development environment for all phases of the application including program development, documentation and machine startup, including controller project files with comments and any graphical project files for HMIs, must be the property of Sound Transit.

1.05 QUALITY ASSURANCE

A. Certification and Labeling:

1. IEDs and ICs must be UL labeled.

2. The enclosure must be UL labeled or certified as conforming to the requirements of UL and ANSI for an Industrial Control Panel.

3. If equipment is not available with a UL label, it may be furnished with a Field Evaluation label provided by a Testing Laboratory approved by the Washington State Department of Labor and Industries (L&I) in accordance with Section 34 21 10 - Traction Electrification System General Requirements.

B. Software Quality Assurance: In order to ensure the quality of the LCMS software, utilize a software quality assurance plan in accordance with IEEE 730. The plan must describe a mechanism for orderly software development.

1.06 SERVICE PROVEN DESIGN

A. IEDs and ICs must be of a proven design in accordance with the following criteria:

1. Have at least 15 identical units in operation in a similar application in railroad or rail transit service for a minimum of 3 years.

2. Software must either be of a proven design in accordance with the criteria specified above or must meet the requirements of this Specification for development of new software.

PART 2 - PRODUCTS

2.01 GENERAL

A. Provide all necessary hardware, software and diagnostic equipment to ensure a fully operational and coordinated system.

B. All hardware, software and diagnostic equipment must comply with Section 25 05 11 - Cybersecurity for Integrated Automation (Operational Technology).

C. A typical TPSS LCMS configuration diagram must be shown on the Contract Drawings.

D. Alternate LCMS arrangements are permitted as described in this Section and as approved by the Sound Transit.

E. If IC alternative with higher configuration is required, it must be approved by Sound Transit prior to commencing work.

F. IEDs, ICs, and HMIs must meet requirements called out elsewhere in these Specifications for the ANSI device or devices they are replacing.

G. Network equipment must meet requirements called out elsewhere in these Specifications, especially in Section 27 21 29 - Network Systems.

H. HMI inputs, outputs and displays must be the same as those provided for existing Northgate and East Link substations.

I. For factory testing of IEDs or ICs used in place of ANSI devices, comply with requirements indicated in Source Quality Control article, below.

J. IC and HMI must be used for overall substation control and monitoring.

K. The outage of LCMS must not impact the substation local control and protection functions.

L. Events must be logged and time stamped by the LCMS and each IED. The format of the time stamp shall provide for a 1ms resolution (seconds to the third decimal place – HH:MM:SS:XXX).

2.02 IED APPLICATION

A. Provide IEDs for the following functions associated with protection, measuring, and control in the TPSS:

1. Reclosing/Load measuring (ANSI Device 182/183).

2. Transfer trip and transfer trip lockout (ANSI Devices 85RX and 85NX).

3. Transfer trip of substations with DC tie switches closed to adjacent substation(s) in service.

4. Emergency Pushbutton (ANSI Device 5).

5. Transformer and Rectifier Fan Control (ANSI Device 23).

6. Phase Sequence (ANSI Device 47).

7. Associated transfer trip and reclosing logic.

8. Reverse current (ANSI Device 32A).

9. Rail Voltage Monitoring and Grounding System (ANSI Device 64V).

10. Rate of rise (ANSI Device 150).

11. Rectifier overtemperature (ANSI Device 26R).

12. Undervoltage (ANSI Device 27).

13. Transformer overtemperature (ANSI Device 49T).

14. Phase fault time overcurrent (ANSI Device 50/51).

15. Ground fault time overcurrent (ANSI Device 50N/51N).

16. Position of breaker (ANSI Device 52).

17. Over-voltage (59).

18. Control voltage Overvoltage (ANSI Device 59X).

19. High resistance frame fault detection and monitoring (ANSI Device 64G/64H).

20. Position of DC breaker (ANSI Device 72F).

21. Rectifier diode failure alarm (ANSI Device 98).

B. In addition to those device and functions shown on the Contract Drawings the following functions must be performed by individual devices which are wired to the IC to provide their output directly and must not be IC controlled:

1. AC/DC lockout relay (ANSI Device 86/186).

2.03 GENERAL HARDWARE REQUIREMENTS

A. Voltage: Substation IEDs, ICs, and HMIs must be powered by 125 Vdc plus or minus 15 percent. If another DC voltage level is required, it must be converted from the 125Vdc Control Power.

B. Input and Output (I/O) Contact, Substation: 125 Vdc type and optically isolated. I/O contacts must be dry type:

1. Electrical Rating: Make 30 A, carry for 3 seconds or longer, and carry 5 A or higher continuously.

2. Mechanical Durability: Greater than 100,000 operations.

3. Provide 25 percent spare I/O points for every individual unit.

4. I/O terminals must be Interchangeable within the identical units in other Sound Transit TPSSs.

C. Storage Environment: Minus 25 degrees C to plus 70 degrees C and 25 degrees C to 55 degrees C at 95 percent humidity.

D. Ambient Operating Environment: 0 degrees C to 55 degrees C, 95 percent non-condensing humidity, and no corrosive gas.

E. Mechanical Shock and Bump Withstand Level: IEC 60255-21-2 Response and Withstand Section Class 1.

F. Vibration Withstand Level: IEC 60255-21-1, Response and Withstand Section Class 2.

G. Seismic Withstand Level: IEC 60255-21-3 Class 2.

H. Electromagnetic Field Impulse Withstand Level: IEC 61000-4-3, 10 V/m.

I. Electromagnetic Field Radio Frequency Withstand Level: IEEE C37.90.2, 35 V/m.

J. Enclosure Protection Level for IEDs: IEC 60529, IP52 or approved equal.

K. Main protection relays for medium voltage (MV) AC feeder and 1500 Vdc feeders must be equipped with fault recording function to capture analog oscilloscope waveforms and digital pre-fault and post-fault data. The fault record must be downloadable.

L. Main protection relays for MVac feeder and 1500 Vdc feeders must have an internal battery which can keep the setting, alarm/event lists and fault records from being lost in case the substation DC control power supply is out of service.

M. Provide test switch for every main IED and power meter.

N. Provide memory within IC to serve as the memory for storing latest events, alarms, and fault records during a disconnection between the IC and SCADA:

1. After connection is restored, current device status and any active alarms must be uploaded to SCADA.

2. Memory must be able to store 10,000 events, 10,000 alarms and 50 fault records which are oscilloscope waveforms.

O. Provide visible status indications on all relays, including auxiliary relays.

2.04 LCMS ENCLOSURE REQUIREMENT

A. Install LCMS IC, HMI, and all accessories in a separate enclosure, located on wall as shown on Contract Drawings.

B. Construction: NEMA Type 12 dust-tight single hinged door enclosure, fabricated from 11-gage steel, with continuously welded or bolted seams. Stiffening design must be approved by ST before fabrication if 12 gage steel is to be used.

C. Door:

1. Gasket with neoprene. lo

2. Provide with a pad-lockable handle with a three-point latch system.

3. Prime and finish paint to match the switchgear. The exterior color must be according to Section 34 21 27 – TES Metal Fabrication and Finishes.

D. Hardware and Accessories: Stainless steel.

E. Internal Back-Panel: Removable, stud-mounted, and located as shown for the mounting of relays and terminal strips.

2.05 LCMS GENERAL REQUIREMENTS

A. Provide the following:

1. Monitoring and control of the traction power system equipment.

2. Monitoring of all unsafe, erroneous, or unknown conditions or combinations of conditions.

3. An interactive interface between the LCMS and traction power system personnel (HMI).

4. A self-diagnostic routine to respond promptly, safely and predictably to detected faults within the LCMS.

B. Communication:

1. Provide communication between the LCMS and IEDs, using a protocol that is routable and secure.

2. Provide communication between the LCMS and SCADA on a dedicated network interface controller (NIC) using Modbus TCP protocol.

3. LCMS PLC, I/O, HMI, IEDs, end devices, and transfer trip networks will be isolated from the main ST operational network, the TCN. The LCMS PLC will have at least two isolated network communications adapters (example: a CPU with integrated network card and an additional communications processor) . One network adapter will be used for LCMS hardware (ex: PLC, I/O, HMI, and transfer trip networks) and the other for connection to SCADA via the TCN. The card for SCADA will be used to acquire NTP time from the TCN to distribute through the PLC which will act as a time source for its local IEDs.

4. Configure communications devices to ST IT standards for IP schema and network configuration. This includes providing a routable LCMS network with a router at each TPSS. Routers will have a management port for out-of-band monitoring. They will be configured in a ring configuration to provide a redundant path, using an appropriate redundancy protocol.

5. The communication protocol for transfer trip functionality will be routable.

6. Collect the information from devices without a communication link through a dry-type input contact.

7. Send out commands to devices without a communication link through a dry-type output contact.

8. Provide a dedicated 1252 subnetted network that connects the maintenance ports of all IED's and switchgear which will facilitate maintenance from a TCN connected remote terminal. This 1252 VLAN will not be routed to other VLANS.

9. Contact Operational Technology (OT) for all TPSS and Non SCADA IPs

C. Sampling:

1. Sample input conditions at rates sufficient to detect and remedy unsafe or damaging conditions in the shortest possible time.

2. Sampling rates and program execution times must be such that the control system is not the limiting factor in response to unsafe or damaging conditions.

3. Design software to ensure that the timing requirements for safety-related tasks are always met.

D. Application software must correctly handle times and dates for the time span from calendar years 2010 through 2100. Clock format must be 24-hour local time with adjustments as necessary for Daylight Saving Time.

E. Time Synchronization:

1. Provide time synchronization between IEDs, IC, and HMI to ensure that the clock in the IEDs is always synchronized with the IC, HMI, and the SCADA mother (system) clock.

2. If protection/monitoring devices are not provided with a time synchronization function, the outputs of these devices must be time stamped by either ICs or other IEDs that have a time synchronization function.

3. Time synchronization design must accommodate the separation of the IED (layer 2), transfer trip ring (layer 3), and TCN (SCADA) networks. Time synchronization is typically done via NTP, SNTP, or PTP network protocols. The LCMS PLC CPU will act as the time source for hardware inside each individual TPSS location. Each LCMS Main PLC CPU will receive its time source via the dedicated SCADA communications processor (network interface) from a ST-OT provided NTP address. No bridging of networks will be permitted to accomplish this task

4. Contact OT for Time Source IP.

2.06 HUMAN MACHINE INTERFACE GENERAL REQUIREMENTS

A. HMI Unit: Provide clear display, easy operation and monitoring, with a realistic graphical representation of the traction power system being monitored as approved by the engineer.

1. Provide a Windows-based user interface on touch screen.

2. Provide connection options for external periphery units (keyboard, mouse, and laptop), e.g. via a USB interface.

3. Must be programmable with TIA Portal and WinCC.

B. HMI Processor:

1. Minimum 64 bit RISC or CISC CPU.

2. Minimum Configuration Memory: 64 MByte.

C. HMI Touch Screen:

1. Touch Elements on the Screen: Contact-sensitive operating elements, such as circuit breakers, keyboard, buttons, input fields and message windows.

2. Size: 15-inches diagonal.

3. Resolution: Not less than 1024 x 768 pixels.

4. Operation:

a. Provide the status of the traction power system.

b. Provide interface to perform open/close operations on traction power system equipment.

c. Touching the relevant buttons and input fields displayed must intervene directly in system operation.

d. Touch elements are operated by touching them lightly with a finger.

D. HMI Control Level:

1. Refer to Section 34 21 10 - Traction Electrification System General Requirements, for information on the three control levels for TPSS switchgear.

2. Provide Local/Remote options on HMI:

a. Local option selected: The switchgear that has been set to Remote at equipment level is controllable from LCMS HMI only. LCC level is not able to send control command to the switchgear.

b. Remote option selected: LCMS is not able to send operation command to any switchgear. All switchgear that has been set to Remote at equipment level is controlled remotely from LCC.

3. Provide “Local” indication LED beside HMI touch screen. The LED must be on when LCMS level “Local” is selected.

2.07 HMI USER MANAGEMENT SYSTEM

A. Provide a user management system to prevent the operable screen objects from being operated by unauthorized personnel.

B. Provide a user management tool for Sound Transit to define users, passwords and access rights with up to five authorization levels. A single master password must be provided for all equipment under this Section. This master password must be delivered only to Resident Engineer. Passwords must only be modifiable through the engineering software tool using the engineering laptop by authorized personnel.

C. Provide at least three pre-defined authorization levels initially:

1. View = Not authorized to make operations.

2. Control = Authorized to make operations.

3. Engineering/System manager = All rights.

D. If an element is operated that is protected by the user management system, the login window must automatically appear:

1. Provide a logoff mechanism to user when user finishes the operation.

2. Provide automatic logoff to reduce risk of operation by unauthorized personnel. The automatic logoff period must be programmable and set initially for 5 minutes.

E. The password character string entered in user management system must be represented by placeholders (*) in the password input field.

F. Acknowledgment of alarms must be done through a manual push button above the HMI on the exterior of the LCMS cabinet and does not require a password.

G. Only a user with the appropriate authorization level can bypass the interlocking function to operate the interlocked equipment.

2.08 HMI FUNCTIONAL REQUIREMENTS

A. Open/close operations through HMI must include at least two steps:

1. First:

a. Selection of the object to be operated (for example, the selection of a circuit breaker).

b. Object selection must consist of at least two steps:

1) Selection of the object.

2) Confirmation of the object selection.

2. Second:

a. Selection of the operation (for example, close or open operation on breaker).

b. Operation selection must consist of at least three steps:

1) Selection of the operation.

2) Confirmation of the operation.

3) Execution of the operation.

3. A combined message window is not allowed; each step above must have an individual window.

4. Selection, confirmation and execution information must be displayed completely. No abbreviations are allowed.

5. Selection and confirmation of operation must be automatically cancelled within 1 minute if the operation is not executed.

B. Inappropriate Operation: Display an interlocking alarm message window to the user when inappropriate operation is attempted.

C. Automatically display a numeric/alphanumeric screen keyboard directly after an input field is touched on the touch screen that requires a password or text entry.

D. After the user completes input, hide the screen keyboard automatically.

E. Provide a confirmation and cancel button:

1. Provide a button with a toggle to bring up or hide the screen keyboard.

F. A view/window becomes active after being touched.

G. If the screen has not been touched for 2 minutes, the display must restore to the substation single line diagram view, regardless of which windows have been activated.

H. A help button must be automatically displayed when the user potentially needs help:

1. Provide additional information and operating instructions in the Help texts.

2. Help Text Examples:

a. For an input field, provide information on permissible value ranges.

b. For an alarm message, provide information related to the cause and its elimination.

2.09 HMI SCREENS

A. Color Code:

1. Provide different colors to indicate the energization status of traction power system equipment on the touch screen.

a. The color function must indicate the energized, de-energized or uncertain state of every single component, including the busbar and feeder cables.

b. There are no exceptions to the following color code for equipment symbols on the single line diagram and no other colors are permitted:

1) Energized Equipment: Red.

2) De-energized Equipment: Green.

3) Uncertain Equipment State: Grey.

c. Display flashing red color text “Energized” beside each piece of equipment when it is first energized and solid Red after 10 seconds.

2. The status of the IEDs, ICs, and HMIs must also be displayed on the touch screen. Equipment symbols of the IEDs, ICs, and HMIs must use the following color code and no other colors are permitted:

a. Good Condition: Green.

b. Bad Condition: Red.

c. Uncertain Condition: Grey.

B. Application Views in HMI Touch Screen: Provide the following six views:

1. Substation One-Line Diagram View:

a. The typical display of this view must represent the Contract Drawing. Changes from the Contract Drawings must be approved by Resident Engineer.

b. The status (including the color) of the traction power equipment on the touch screen must be displayed in real time and updated at least every 2 seconds.

c. This view must provide open/close operation of the equipment in accordance with the HMI user management system.

d. If any protection function is triggered, the related equipment and alarm field must flash until it is acknowledged.

2. Traction Power System Sectioning Diagram View:

a. The typical display of this view must represent the Contract Drawing. Changes from the Contract Drawings must be approved by Resident Engineer.

b. The status (including the color) of the traction power equipment on the touch screen must be displayed in real time and updated at least every 2 seconds.

c. If any protection function is triggered within the viewed section, the related substation icon must flash and Substation One-Line Diagram View must pop-up automatically.

d. HMI view must display TPSS where operations are and TPSS's in both directions from the operation substation as indicated on the Contract Drawings. Display must be in real time indicating circuit breakers and manual disconnect switches position(s).

3. Local Centralized Monitoring System Diagram View:

a. This view must display the status of the HMI, IC, and IEDs. The 125 Vdc control power system status must be displayed on this view.

b. If a device fault occurs, the related icon must flash until it is acknowledged.

4. Event List View:

a. Event view must display operating statuses and fault messages concerning the traction power system and IEDs, ICs, and HMIs.

b. Display in this view record of logging in/out, and record of values measured and stored periodically, such as current, voltage, etc.

c. Event List must be user definable to add additional event items. Any event item must be able to convert to Alarm item. These modifications to events or alarms can only be implemented through the use of an engineering laptop by personnel with the appropriate authorization.

5. Alarm List View:

a. The typical display of this view must represent the Contract Drawings. Changes from the Contract Drawings must be approved by Resident Engineer.

b. Alarm list view must display fault messages concerning the traction power system and the IEDs, ICs, and HMIs:

1) Acknowledgment of alarms must be done through a manual push button above the HMI on the exterior of the LCMS cabinet and does not require a password.

2) The alarm message must continue to flash until it is acknowledged.

3) A blue LED must be provided next to the alarm acknowledgment pushbutton to indicate the alarm status of the LCMS. Below are the three states of the blue LED relative to the alarm status of the LCMS:

a) Blinking: Alarms present that have not been acknowledged.

b) Solid on: Alarms present but have been acknowledged.

c) Off: No alarms present.

c. Alarm list must be user definable to add additional alarm items. Modifications to alarms can only be implemented through the use of an engineering laptop by personnel with the appropriate authorization.

6. Annunciation View: Annunciation view must follow the same style as Northgate and East Link annunciation.

C. HMI Trouble: In addition to the touch screens, an extra LED must be provided to indicate “HMI Trouble” in case the touch screen fails to display any information.

2.10 IC/HMI APPLICATION SOFTWARE DEVELOPMENT ENVIRONMENT REQUIREMENTS

A. Provide a user-friendly PC/Windows based development environment suitable for IC/HMI application software updating and modification. TIA Portal and WinCC must be used to program all IC and HMI equipment.

B. The environment must be dedicated solely to creating control/monitoring software. It must use familiar, standardized editors bundled into a single application.

C. The environment must include a graphics editor and online help that simplify development of IC/HMI application software.

D. The environment must comply with Microsoft Windows Graphical User Interface (GUI) and IEC 61131-2 standards for programmable logic controllers.

E. Provide de-bug, documentation and machine startup facilities in the environment.

F. Provide complete user training for the application of development environment in accordance with Section 01 79 00 - Training.

G. Provide complete user documentation for the environment in accordance with Section 01 78 23 - Operation and Maintenance Data.

2.11 LAPTOP AND ASSOCIATED SOFTWARE FOR MAINTENANCE

A. Sound Transit OT must provide three laptops with associated cords, ports. Contractor shall providecomprehensive relay setting and downloading interface software and related operating system at the beginning of the project.

B. Provide TIA Portal and WinCC for all phases of the application including program development, documentation and machine startup.

C. Laptops shall comply with the following:

1. Windows 10 Professional Edition.

2. CPU Speed: 2.6 GHz minimum, Dual-Core minimum.

3. RAM: 8 GB minimum, DDR3, 1600 MHZ minimum.

4. Hard-drive: 7200 RPM minimum, 1 TB minimum.

5. Audio: Stereo speakers & speaker port, microphone port.

6. Display: Minimum 15” diagonal, HD Graphics Support, VGA, HDMI.

7. Ports: Minimum 3 USB 3.0 ports, VGA, HDMI, speaker, microphone.

2.12 INTERFACE WITH SUPERVISORY CONTROL AND DATA ACQUISITION (SCADA)

A. Provide TCP/IP RJ45 communication channel to interface with SCADA through an interface cabinet. A dedicated SCADA Network Interface Communication Card, that is separated from the NIC providing control signals to IED's and other equipment.

B. The LCMS must, at a minimum, provide the information to SCADA in accordance with approved Traction Electrification Systems SCADA Points I/O List.

C. Control command to the substation equipment from the Link Control Center must be implemented by LCMS.

D. The request to close any DC feeder breaker must be governed by the load-measure reclose system.

E. The substation must be provided with sufficient logic to ensure any response to a remote closure request will not result in an unsafe condition or cause damage to the Substation or any of its components.

F. AC and DC feeder breakers must be equipped with remote closing capability via SCADA. Once connected and tested remotely, the close function only must be disabled in a manner approved by Resident Engineer.

2.13 TRANSFER TRIP

A. General:

1. Fiber optic monitoring and transfer trip must be integral to protection relays.

2. Integrate transfer trip with existing substations.

B. Non-Adjacent TPSS:

1. If an adjacent substation DC tie switches are closed, DC breakers not already open must be tripped. The transfer trip signal continues to the next adjacent substation that is energized and trips the breaker(s) of that substation, as described below.

2. This energized non-adjacent substation would be the substation supplying power to the same section of OCS as the originating substation.

3. The transfer trip signal continues to the next adjacent substation. No further cascading is allowed.

C. Transfer Trip Communication:

1. Provide fiber optic cable as the communication medium between substations for transfer trip function.

2. Provide interface to and termination of the fibers for a complete operating transfer trip function.

3. Monitor the condition of the fiber optic cable continuously.

4. Generate an alarm and send to LCMS if a fault condition is detected.

D. Transfer Trip Function, Initiated by DC Breakers:

1. Initiate direct transfer tripping between feeder breakers supplying power to the same section of OCS. See Non-Adjacent TPSS paragraph above.

2. Tripping of a DC breaker must initiate tripping of the remote active breaker feeding the same section.

3. Provide two types of transfer trip:

a. Transfer trip with reclose (Device 85RX): Automatic resetting must be controlled by the load measure reclose relay and occurs on:

1) DC over-current relay (Imax from protective relay IED).

2) 76 DC over-current relay (breaker mechanical direct acting trip).

3) Rate of rise (di/dt from protective IED).

4) Rail-to-ground current faults (second stage).

b. Transfer trip with lockout (Device 85NX): Trip the DC lockout relay (Device 186) in both the originating and receiving substations, and occurs on:

1) Frame faults.

2) Rail-to-ground current faults (first stage).

3) Incomplete sequence faults.

E. Transfer Trip Function, Initiated by ETS and SSS:

1. Wire Emergency Trip Station (ETS) pushbuttons to provide a loop circuit of series wired contacts that must energize a summary relay.

2. Interruption of the series circuit must cause the substation and adjacent substations to shut down as follows:

a. Originating substation:

1) AC main breaker: Trips and locks out.

2) DC main breaker: Trips and locks out.

3) DC feeder breakers: Trip and lock out.

b. Adjacent active substations are shut down by transfer trip from the originating substation, as follows:

1) All DC feeder breakers feeding the same OCS section: Trip and lock out.

2) If an adjacent substation is off-line and equipped with by pass switches that are closed, the transfer trip signal continues to the next adjacent substation that is energized and will Trip and Lock out all DC feeder breakers feeding the same OCS section.

3. Wire Substation Shutdown Station (SSS) with the same functions as ETS, except SSS must not transfer trip adjacent substations.

2.14 FABRICATION

A. LCMSs must be wired in accordance with the following, using type SIS wire, and wire markers.

1. Wire and Cable Marking.

a. Verify that wire and cable markings are in accordance with applicable NEMA and NFPA 70 requirements.

2. 600 V SWITCHBOARD WIRE

a. Conductor: Stranded, tinned, annealed copper per ASTM B33

b. Insulation: Thermoset, chemically cross-linked polyethylene, UL Type SIS, 90 degrees

c. Flame rated per UL 1581 Vertical Flame (VW-1)

B. The HMI and ancillary devices must be flush mounted in the door of the main DC switchgear enclosure or negative cubicle.

C. Auxiliary relays, duct and terminal strips must be located on a removable panel.

D. DIN rail mounted terminals must be used, similar to the arrangement in existing Central Link and University Link TPSSs, unless otherwise approved by Sound Transit.

2.15 SOURCE QUALITY CONTROL

A. Tests and Inspections: IEDs or ICs used in place of ANSI devices must be factory design tested and factory production tested in accordance with Section 34 21 16.11 - Traction Power Substation Testing, for the ANSI device, or devices they are replacing.

PART 3 - EXECUTION

3.01 INSTALLATION

A. LCMS hardware must be identical and interchangeable between TPSSs, including wire numbering and marking conventions.

B. All interconnecting wiring must be minimum No. 14 AWG type SIS rated at 600 Vac, or multiple conductor, low voltage cable in accordance with the following:

1. Multiple Conductor, Low-Voltage Cable:

a. Provide multiconductor cable conforming to NEMA WC 70, approved for use in cable tray, with the following additional requirements:

1) Conductors: Bare, soft annealed copper per ASTM B33, Class B stranded in accordance with ASTM B8. Quantity of conductors as indicated

2) Insulation: Type XHHW-2, cross-linked polyethylene insulated in accordance with NEMA WC 70 or type RHW-2, ethylene-propylene-rubber-insulated in accordance with NEMA WC 70

3) Overall Covering: Cable shall be provided with sunlight-resistant jacket over the insulation meeting the flame-spread requirements of UL 1277. Where required by NFPA 130, provide low-smoke zero-halogen outer cable jacket.

4) Multiple conductors for control wire shall be minimum of No. 14 AWG stranded copper.

5) Insulation Rating: 600 V.

b. Multi-conductor cable shall be made by assembling individual or twisted pairs of insulated conductors into a tight cylindrical form using fillers that are compatible with other materials in the cable. The jacket used shall fit tightly to form a firm assembly.

2. Splices and Terminations:

a. Use continuous lengths of wire and cable between power source and equipment. Splices are subject to approval by Resident Engineer.

b. Where splices are required and approved by Resident Engineer, make them only in approved outlet, junction or pull boxes, or in equipment cabinets. Follow manufacturer's instructions in splicing wire and cable.

c. Tools.

1) Use splice and terminator installation tools and installation techniques recommended by the manufacturer.

2) Conductor Sizes Through No. 6 AWG: Mechanical hand tools may be used, with dies for each conductor size as recommended by the manufacturer.

3) Conductor Sizes Larger Than No. 6 AWG: Use hydraulic or ratcheting tools with hexagonal or circumferential dies as recommended by the manufacturer.

4) Use compression tools which permanently imprint die information on the completed connection.

d. Insulate splices to a level equal to that of the cable.

e. Fixture Wire: Make splices in lighting circuits with insulated crimp-type connectors.

f. Control and Switchboard Cables: Terminate each wire held with screw-type terminals using a nylon insulated sleeve, ring-tongue-type or locking spade-type, crimp-on lugs.

C. Provide an interior Fiber Distribution Panel in each TPSS, and a Communication Distribution Cabinet on the exterior of TPSS's where indicated on Drawings.

D. Provide and terminate fiber optic cable for SCADA at the Fiber Distribution Panel.

3.02 FIELD QUALITY CONTROL

A. Field Tests and Inspections: Test the following in accordance with Section 34 21 16.11 - Traction Power Substation Testing:

1. LCMS.

2. IEDs and ICs.

3. Application software.

END OF SECTION

SECTION 34 21 16.25

TRACTION POWER SUBSTATION INSTALLATION

PART 1 - GENERAL

1.01 SUMMARY

A. Section includes:

1. Requirements for components and materials that are part of the traction power equipment, including the following:

a. Electrical insulating laminate.

b. Electrical varnish for cut surfaces of insulating material.

c. ETS/SSS buttons and enclosures.

d. Smoke and heat detectors

e. Knox box.

f. Blue light.

g. Fire extinguisher.

h. AC/DC breaker test station.

i. Mobile work station.

j. Station FCC ETS Cabinet, enclosure, controls, indications, signage.

k. Communications Interface Cabinets.

l. Sump pump, oil sensor, controls, piping, and accessories.

m. Portable fall protection around hatch opening.

2. Materials and workmanship of Traction Power equipment installation.

3. Placards and signage.

1.02 REFERENCES

A. Reference Standards: Applicable provisions of the most recent adopted editions of the following standards must apply to the work of this Section:

1. ANSI Z358.1 - Emergency Eyewash & Shower Standard

2. National Fire Protection Association (NFPA):

a. NFPA 70 - National Electrical Code (NEC).

3. Institute of Electrical and Electronics Engineers (IEEE)

a. IEEE 837 Standard for Qualifying Permanent Connections Used in Substation Grounding

1.03 ADMINISTRATIVE REQUIREMENTS

A. Scheduling: Arrange to ship batteries directly from the manufacturer immediately prior to installation. Batteries older than 3 months are not acceptable.

1.04 SUBMITTALS

A. Product Data: For each product indicated, but not limited to the following:

1. Electrical insulating laminate.

2. Electrical varnish for cut surfaces of insulating material.

3. ETS/SSS buttons and enclosures.

4. Smoke and heat detectors.

5. Knox box.

6. Blue light.

7. Fire extinguisher.

8. AC/Dc breaker test station.

9. Mobile work station.

10. Station FCC ETS Cabinet, enclosure, controls, indications, signage.

11. Qualifications of Field Service Engineer.

12. Communication Interface Cabinet.

13. Sump pump, accessories, piping and hardware, controls and indications, documentation to establish service proven history, including details of application history, including number of units in operation and length of time in service.

14. Portable fall protection around hatch opening.

B. Shop Drawings:

1. Seismic Bracing and Anchorage Plan:

a. Submit in accordance with seismic submittal requirements in Section 26 05 00 - Common Work Results for Electrical.

b. Include bracing and anchorage for built-in-place substations, pre-fabricated substations, and circuit breakers in cross passage.

c. Plan must demonstrate the suitability of the proposed anchorage and bracing.

d. Plan must address anchorage of the following equipment, as applicable:

1) AC switchgear.

2) Traction power transformer.

3) Rectifier.

4) Dc Switchgear, including method of electrical isolation.

5) Dc Disconnect Switches.

6) Conduit racks.

7) Cable tray.

8) Battery and battery rack.

9) Circuit breakers in cross passage.

10) Communications, HMI & control cabinets.

11) Mechanical equipment, including Sump Pump.

2. Raceway layout drawings and mounting details.

3. Substation Interior Perimeter Ground Bus Drawings.

a. Submit for each built-in-place facility if installations differ.

b. Submit for pre-fabricated substations.

c. Provide plan view showing perimeter ground bus, equipment, and ground connections.

d. Provide elevations of each wall showing height of perimeter ground bus and connections to equipment.

4. Station Fire Control Center (FCC), Emergency Trip Station (ETS) buttons schematic, wiring and installation drawings.

5. Sump pump installation drawings.

C. Pre-Fabricated Substation Setting Plan.

D. Certifications: Contractor Certified built-in-place traction power facility floor plans for all equipment to be placed in TPSS rooms.

E. Samples: Samples for placards and signage.

F. Manufacturer's Instructions: Shipping, Handling, and Storage Plan for TPSS Equipment.

G. Built-in-Place Substations: Submit a Shipping, Handling and Storage Plan, including the following:

1. The number of individual pre-wired units to be shipped from the factory.

2. Handling and shipping preparations for each unit.

3. Storage plans for equipment and other material not immediately installed in its permanent location upon arrival.

4. Unloading setting and inspection procedures for each unit upon arrival at the site.

H. Pre-fabricated Substations: Submit a Setting Plan, including the following:

1. Drawing showing placement of crane and truck in relation to substation foundation.

2. Written description of steps to be taken to pick and set substation.

3. Approved traffic control plan from the City if a plan is required.

I. Operation and Maintenance Data: Operation and maintenance data including product data and bill of materials for components specified in this Section.

1.05 QUALITY ASSURANCE

A. Equipment Manufacturer's Field Service Engineer Qualifications:

1. Installation Field Service Engineer must have 10 years' experience commissioning rail transit traction power substations of the specified type, size and equipment characteristics.

2. Proposed engineer's resume to be submitted to Resident Engineer for approval.

3. Exothermic welding shall be performed by electricians trained in the selection, maintenance and operation of exothermic welding materials and equipment.

4. Grounding resistance testing shall be performed by electricians trained in grounding system installation and testing.

B. Regulatory Requirements.

1. Unless otherwise specified, electrical equipment and material shall be listed and labeled for the purpose for which it is used by the Underwriters Laboratories, Inc. (UL).

2. All installations shall be in accordance with NFPA 70.

1.06 DELIVERY, STORAGE AND HANDLING

A. Obtain permission from Resident Engineer prior to shipping each Traction Power Substation or other traction power equipment to the site.

B. Ship and store equipment and material intended for use on this Contract such that damage or reduction in life is prevented.

C. Protect equipment and material and maintain in new condition throughout the Contract period until acceptance by Sound Transit:

1. Protect stored material subject to corrosion with waterproof covers or coatings. Materials and equipment must be stored under cover and off the floor or ground.

2. Seal insulated cable ends and store in a dry location to prevent the entry of moisture into the cable conductors.

3. Store equipment with all ports, covers and other enclosure openings closed to prevent ingestion of dirt or moisture and keep dry and free from condensation.

4. Take special care with the storage of power transformers, switchgear and other components which must be stored indoors, in a dry, heated, approved location.

5. Handle or store material with special handling or storage requirements according to the manufacturer's requirements.

D. Equipment that has become wet or damp must be rejected by Sound Transit as defective.

E. Identification:

1. Clearly mark material with a defined life expectancy with the expiration date. Material must not be used beyond the expiration date.

2. Clearly mark material and store with appropriate nomenclature to prevent misapplication.

3. Mark and promptly remove from the jobsite rejected or used material, or material which is not in conformance with the Contract requirements.

1.07 FIELD/SITE CONDITIONS

A. Temporary Power Requirements:

1. After equipment installation, protect equipment from damage from moisture by maintaining heat within each space, or within each piece of substation equipment.

2. Arrange temporary electrical service as needed to each of the spaces and either energize the electrical panels and heaters in the spaces, or provide temporary service equipment sufficient to power temporary heaters.

3. Maintain the temporary electrical service in operation until the permanent electrical service is energized and there has been Final Acceptance by Sound Transit.

4. All cost of temporary power must be at the cost of the Contractor.

B. Built-in-Place Traction Power Facility: Room lighting, emergency lighting, wall receptacles, and HVAC are provided under other specification sections. Smoke and fire detection system are provided under other specifications sections. Interfaces with those systems to be coordinated by the contractor.

PART 2 - PRODUCTS

2.01 INSULATING MATERIALS

A. Wherever “electrical insulating laminates”, “laminates”, “Glastic barrier” or “Glastic pad” are called out in the Contract Documents, it must conform to the following:

1. Basis of Design: Röchling Glastic Composites, Glastic 1494 or approved equal.

2. Thickness: 1/4 inch, unless indicated otherwise.

B. Electrically Insulated Floor Covering: Specified in Section 09 67 25 - Dielectric Epoxy Flooring.

C. Sealing material for cut edges of electrical insulating laminate: Electrical varnish such as Ashland Chemical, Hetrolac, or other product recommended for use with Glastic.

D. Prohibited Insulating Materials:

1. Electrical insulating paper, also called “fish paper”.

2. Electrical tape of any type.

2.02 COMPONENTS

A. ETS/SSS Buttons: Heavy duty, industrial grade, pushbutton operator and contact block, rated for the load, large mushroom head, red, with protective cover or enclosure to prevent inadvertent activation.

1. Provide buttons with locking mechanism that mechanically locks upon activation.

2. Activated buttons must place standing trip signal to related breakers until buttons are manually reset.

B. ETS Enclosures for Exterior Installation: NEMA 250 Type 4X, gasketed, lockable. Provide padlock and obtain keying requirement from Sound Transit.

C. Interior and Exterior Lighting: See Section 34 21 16.17 - Prefabricated Traction Power Substation Building.

D. Smoke and Heat Detectors:

1. Smoke Detector(s):

a. Manufacturer/Product: Edwards 711 U with base or approved equal.

b. Sensing element: Photoelectric.

c. Sensitivity: NFPA 72 compliant.

d. UL 268 compliant.

e. Quantity: 2 per TPSS.

f. Form C contacts for control and monitoring.

2. Heat Detector:

a. Manufacturer/Product: Edwards 713-5U with base of approved equal.

b. Sensing element: Photoelectric.

c. UL 521 compliant.

d. Quantity: 1 per TPSS.

e. Form C contacts for control and monitoring.

3. Self-diagnostic capability continually monitors operation.

4. Provide separate cabling from each detector contact to the PLC in the LCMS cabinet.

5. Provide power supervision relays to monitor control power.

6. Control power to the detectors and wiring must be supervised using interposing relays. Provide notification points to the LCMS and SCADA.

E. Knox Box With Lock: 6 inches by 6 inches by 4 inches. Obtain keying requirements from Local Fire Department.

F. Blue Light: 12 W LED, vandal proof lens and suitable for wet locations.

G. Wiring Devices: See Section 26 05 00 - Common Work Results for Electrical.

H. Ground Bus: ASTM B187/B187M, 98 percent conductivity copper, 1/4-inch thick, silver plated, width as specified below in PART 3 - EXECUTION.

I. Fire Extinguisher: 20 pound, CO_2.

J. Eye Wash Station:

1. Manufacturers/Products:

a. Sperian Protection Fend-All Pure Flow 1000 (Eyewash Station);

b. Fend-All Porta Stream III (Heated Eyewash Station); or approved equal.

2. Provide eyewash station and cartridges that are products of a single manufacturer.

3. Eyewash Stations:

a. Type: Self-contained eyewash station meeting the requirements of ANSI Z358.1, using eyewash solution cartridges, with reservoir for discharged fluid, wall mounted.

b. Eyewash solution cartridges:

1) Factory-sealed, containing contaminant-free, pH-balanced saline solution with integral nozzle(s) for solution delivery in a gentle flow meeting ANSI Z358.1 requirements.

2) Shelf life: Minimum 2-years from date of manufacture.

K. AC/DC Breaker Test Station:

1. Capable of tripping AC or DC breaker.

2. Wall mounted unit with umbilical cord for connecting to breaker.

3. Provide strain relief where cord connects to cabinet.

4. Provide means to conveniently stow umbilical cord when not in use.

5. Separate umbilical cords may be provided for AC and DC breakers.

6. Provide indicating lights of "OPENED" and "CLOSED".

L. Mobile Workstation:

1. Basis of Design: Rubbermaid TradeMaster, Model 4533-88 or approved equal.

2. Description: Caster-equipped non-metallic tool cabinet topped with a work surface suitable to hold drawings, tools, or portable test instruments.

3. Construction:

a. Heavy-duty plastic.

b. Capacity: 750 pounds.

4. Features:

a. Wheels: Four 5-inch casters.

b. Drawers: Four, with ball bearing door slides.

c. Cabinet with adjustable shelf.

d. Built-in drawer lock.

e. Provide one workstation per substation.

5. Nominal Dimensions:

a. Width: 49 inches.

b. Depth: 26 inches.

c. Height: Nominal 38 inches.

M. Portable Fall Protection Around Hatch Opening

1. Provide portable fall protection for around the TPSS hatches that comply with WAC, OSHA, and ANSI, whichever is more stringent.

2. Provide prior to turnover to pre-revenue service.

2.03 STATION FIRE COMMAND CENTER (FCC) OR FIRE CONTROL ROOM (FCR) ETS PANEL

A. Enclosure: As indicated on Contract Drawings.

B. Controls and Indications:

1. Provide control power indication light on ETS panel. The light indicates the presence of ETS button control power. If the ETS is connected to the TPSS equipment by a communications circuit, provide a visual indication that the communications circuit is functional. Local power for the ETS, if needed, must be provided by the station or signals UPS.

2. Provide two buttons to de-energize tracks respectively.

C. Function: Traction power is re-energized remotely from LCC (Light Rail Control Center) after ETS buttons are manually reset.

D. Signage: Provide “SHUT DOWN XB TRACTION POWER” sign above each button, as appropriate.

2.04 SUMP PUMP SYSTEM

A. General Requirements:

1. The control system of the sump pump must allow water to be automatically pumped from the pit without danger of ejecting potentially harmful oily substances into the sewer.

2. TPSS sumps with a gravity drainage connection do not require a sump pump.

B. Sump Pump:

1. Type: Industrial/commercial, 120/240 Vac, with pump base, screen, column and stainless steel float(s).

2. Size: Minimum 1 HP.

3. Flow volume: Maximum 60 GPM.

4. Pumps for all TPSS to be the same.

C. Control System:

1. Description:

a. The control system must be capable of controlling the sump pump and have a proven record of reliable service.

b. The control system must be compatible with a variety of sump pump and valve manufactures.

2. Probe: Self-cleaning, hermetically sealed, stainless steel, oil-sensing.

3. Indicator Lights: LED, to indicate oil alarm, high motor current alarm, power to system, pump running, and high water alarm.

4. Alarms: All alarm indications must also annunciate with an audible alarm.

5. Remote Monitoring: Indicators must have capabilities for remote monitoring connections for data delivery to SCADA.

D. Piping:

1. Discharge Piping: Schedule 80 PVC.

2. Mounting Hardware: Stainless steel.

3. Discharge Piping Supports: Stainless steel.

E. Accessories:

1. Check valve: Full flow PVC.

2. High water alarm: 120 Vac control; dual float switch, local and remote indicators, in NEMA 3R enclosure, similar to SJE-Rhombus model TADUO-01H, or approved equal.

2.05 PLACARDS AND SIGNAGE

A. All exterior signs must be waterproof and UV protected.

B. Provide signage on all TPSS doors facing outside that reads DANGER HIGH VOLTAGE-AUTHORIZED ENTRY ONLY.

C. Provide information placards or signs containing information on de-energizing the high-voltage electrical rooms, location of the disconnecting switches, and phone numbers for the appropriate personnel who are required to disconnect the power.

D. Provide signage to clearly identify the Traction Power Substation Emergency Trip Stations (ETS), and information placards or signs containing information describing the sections of track that the ETS de-energizes, and contact information for Link Control at the adjacent ETEL serving the ETS.

E. Provide TPSS identification sign with building name and address on each TPSS exterior door.

F. Provide signage with procedure for disconnecting battery from control power system by the batteries and battery charger.

G. Provide signage with procedure for transferring control power AC source between generator connection and regular AC panel, including load shed scheme. Install signage at the MTS, generator plug, and the AC panel.

2.06 FACTORY ASSEMBLY

A. Requirements for installation in Part 3 apply to factory assembly of pre-fabricated substations, except where requirements are specific to built-in-place substations.

PART 3 - EXECUTION

3.01 INSTALLATION - GENERAL

A. Installation work must not start until anchorage, raceway, and wiring drawings have been approved by Sound Transit.

B. TES Substation Equipment Manufacturer's Field Service Engineer:

1. Perform Work under this Section under the direct supervision of the TES substation equipment manufacturer's Field Service Engineer.

2. Engineer must be onsite to coordinate and direct installation from floor and wall insulation to testing and start-up of each substation.

C. Equipment must be installed in accordance with manufacturer's instructions and these Specifications.

D. Locate and install equipment in accordance with Contract Documents and approved shop drawings.

E. Make minor changes in location of exposed conduits, cable tray, or equipment prior to installation as directed by Resident Engineer, at no additional cost to Sound Transit.

F. Prohibited Installation Methods:

1. Open wiring of any kind, except as specifically authorized by Sound Transit.

2. Support of conductors by metal channel.

3. Support of conductors from conduits, equipment or building framing using nylon wire ties.

4. Wiring gutter and wireways must not be used for either power or control wiring.

3.02 INSTALLATION OF ELECTRICALLY INSULATING MATERIALS

A. The DC switchgear must be completely electrically and physically isolated and insulated from the walls by electrical insulating laminate.

1. Laminate must be full height.

2. For walls where the clearance between DC switchgear and walls is 6 feet or greater, electrical insulating laminate will not be required on those walls.

3. Fasten the laminate in place using non-conductive and non-metallic fasteners, in accordance with the manufacturer's instructions.

B. Insulate all metallic surfaces within 6 feet of rectifier and DC switchgear.

C. Provide a full and continuous piece of laminate to isolate the rectifier transformer from the DC switchgear:

1. Extend barrier into the room at full height, as shown on the Contract Drawings.

2. Reinforce the edge with a non-metallic angle or channel fastened to the floor and ceiling for stiffness.

D. Fasten a continuous piece of laminate to the ceiling over the arc chutes of the DC breakers if conductive surfaces are within 3 – feet of top of DC switchgear.

E. Seal cut surfaces of electrical insulating laminate with electrical varnish.

3.03 INSTALLATION OF DIELECTRIC EPOXY FLOORING

A. Refer to Section 09 67 25 - Dielectric Epoxy Flooring.

3.04 INSTALLATION OF TPSS EQUIPMENT

A. Verify that rooms and premises are clean, warm, and dry.

B. Test installation of the floor and wall insulation as required by Section 34 21 16.11 - Traction Power Substation Testing, prior to installation of equipment.

C. Protect the floor and wall insulation from damage during equipment installation.

D. Install equipment plumb, level, in a workmanlike manner, and square with building lines.

E. Seismic Requirements:

1. Refer to Section 26 05 00 - Common Work Results for Electrical, for seismic requirements.

2. Brace equipment and raceways against earthquakes by securely fastening in place.

3. Brace freestanding equipment such as switchgear at the top to prevent movement and fasten at the bottom to prevent sliding or walking.

4. Securely fasten floor-mounted transformers and AC switchgear to the floor using concrete expansion anchors or nuts and bolts for prefabricated substations.

5. Securely fasten DC switchgear to the floor but take great care to maintain electrical isolation from the building structure and other equipment through the use of dielectric spacers or shims used in conjunction with the fasteners, hardware and insulated flooring.

6. Support conduit racks and cable trays laterally using braces fabricated from channel and fittings.

a. Supports must be sufficient to withstand the seismic load.

b. Locate lateral supports within 2 feet of each bend or tray dropout and space no greater than 10 feet apart.

3.05 INSTALLATION OF TPSS GROUNDING

A. Connect grounding pigtails from grounding grid to the grounding pads specified in Section 34 21 16.17 - Prefabricated Traction Power Substation Building, and to the substation interior perimeter ground bus.

B. Interior Perimeter Ground Bus:

1. Provide 2-inch wide copper ground bus around entire perimeter of substation room.

a. Mount on metallic stand offs.

b. Install at 18 inches above finished floor where there are no obstructions, and up to 8 feet above finished floor to avoid equipment or doorways.

c. Connect grounds furnished and installed by others in accordance with the following:

1) Ground connections:

a) Buried or Embedded Connections: Provide exothermically welded or compression-type connectors. Bolted connections shall not be buried or embedded.

b) Above-ground Connections: Provide exothermically welded or compression-type connectors. Connections shall be made in accordance with the manufacturer's instructions. Bolted connections are permitted only in secured locations not accessible to the public.

c) Connections shall be made in accordance with the manufacturer's requirements. Clean ferrous structures and piping and coat with minimum 6 mils thick coal-tar epoxy for a distance of 6 inches from the grounding attachment point.

d) Do not bond buried metallic piping systems or structures to grounding electrode systems unless specifically directed.

e) Provide continuous ground conductor or splice using connections qualified in accordance with IEEE 837.

f) Provide water-stops on stranded ground conductors where they enter a structure.

g) Bond metallic conduits.

2) Equipment and Enclosure Grounds.

a) Connect ground cables installed by others to enclosures and ground bus.

b) Connect electrical and distribution equipment to the grounding system. Size cables or bus as specified.

c) Connect non-electrical equipment with metallic enclosures to the grounding system. Securely bond fences and gates as indicated.

d) Bond boxes to the raceway or conduit system with a copper jumper solidly bolted to the box, sized in accordance with NFPA 70.

3) Equipment Grounding Requirements.

a) Assemble metallic conduits to provide a continuous ground path.

b) In metallic and nonmetallic conduits where conductors are installed, provide a separate ground wire and install in accordance with these Specifications:

i) Size equipment grounding conductors in accordance with NFPA 70 Article 250 to provide adequate conduction path for ground faults. Increase size as required to allow for circuit voltage drop.

ii) Bond conductor to metallic raceways and boxes at access and pull points using insulated grounding bushings.

iii) Connect grounding bushings to the grounding system using conductors sized in compliance with NFPA 70.

c) Ground metallic raceways, boxes, cabinets, exposed expansion joints, lighting fixtures, motors, transformers and receptacles. Provide grounding bushings or compression connectors attached with machine screws for bonding.

2. Provide 1-inch wide copper ground bus from panelboards and other electrical equipment within 8 feet of ground bus, including panelboards and equipment installed by others, to perimeter ground bus.

3.06 INSTALLATION OF TRACTION POWER TRANSFORMER AND AUXILIARY POWER TRANSFORMER

A. Locate and wire Traction Power Transformer and the Auxiliary Power Transformer as shown on Contract Drawings, or as otherwise approved by Sound Transit.

B. Make grounding connections to transformer frames and system neutrals as required by National Electrical Code and transformer manufacturer.

C. Mount transformers on vibration isolating pads.

D. Keep secondary feeders from TPSS Auxiliary Power Transformer to AC panelboards separate, partitioned and barriered from high-voltage conductors, and install in conduit.

E. Provide conduit and wiring for the Transformer Temperature Monitor in conduits or cable tray. The size of conduit, and type and number of conductors must be in accordance with the requirements for wiring and the actual monitor provided, as approved by Sound Transit.

3.07 INSTALLATION OF AC AND DC SWITCHGEAR, AND RECTIFIER

A. The installation of the AC and DC switchgear, rectifier and transformer enclosure partitions, must be in accordance with the approved shop drawings.

B. Completely insulate rectifier from ground and from the traction power transformer and the AC switchgear.

1. Insulate and isolate rectifier from the floor using an epoxy floor covering in accordance with Section 09 67 25 - Dielectric Epoxy Flooring.

2. Insulate and isolate rectifier from the transformer using electrical laminate.

3.08 INSTALLATION OF CONTROL POWER SYSTEM

A. Provide complete control power system in accordance with Section 34 21 16.21 - TPSS – Control Power, the Contract Drawings, and the approved shop drawings.

B. System consists of the following components:

1. Battery.

2. Battery Charger.

3. Panelboard.

4. Disconnecting switch.

C. Verify NFPA 70 required electrical clearances prior to installation of panelboards.

D. Within TPSS, interconnecting wiring must be 600 Vac installed in RTRC/Epoxy fiberglass or EMT conduit in accordance with these Specifications.

E. Verify prior to installation that batteries are less than 3 months old.

F. Provide 1/4-inch glastic barrier around control battery that can be easily removed for inspection and maintenance.

3.09 INSTALLATION OF AC PANELBOARD WIRING AND CIRCUIT BREAKERS

A. Built-in-place substations: Ac panelboard and feeder is provided under separate specification sections. Refer to the Contract Drawings. Provide additional breakers as needed, subject to Sound Transit approval.

B. Prefabricated Substations: Provide power cables from the TPSS auxiliary power transformer to the AC panelboard as required. Install wiring in conduit or cable tray in accordance with the Specifications, and as approved by Sound Transit.

C. Provide conduit or cable tray and power wiring between the AC panelboard and substation equipment.

3.10 INSTALLATION OF CONDUIT AND BOXES

A. Provide conduit and boxes within the traction power substations in accordance with 26 05 33 Raceway, Boxes, Hangers and Supports for Electrical Systems.

B. Provide conduit supports and conduit racks using channels and clamps in accordance with Section 26 05 33 - Raceway, Boxes, Hangers and Supports for Electrical Systems.

3.11 INSTALLATION OF CABLE TRAY

A. Provide fiberglass cable tray, where required, in accordance with 26 05 33 Raceway, Boxes, Hangers and Supports for Electrical Systems.

B. Support cable tray in accordance with Section 26 05 33 - Raceway, Boxes, Hangers and Supports for Electrical Systems.

C. Where cable tray is used, provide separators for power and 125 Vdc control wiring.

3.12 INSTALLATION OF CONDUCTORS

A. General:

1. Install wire and cable in accordance with Section 26 05 00 - Common Work Results for Systems Conductors and Cable.

2. Install wiring in accordance with approved manufacturer's wiring diagrams and schematics.

3. Install wiring only after equipment is set in place and anchored.

4. Wiring must be housed within equipment or installed in cable tray or raceway using a type TC cable or individual power cables.

B. Conductor Type Requirements:

1. Provide 2.4 kV medium-voltage single conductor cables for TES system feeder Section 26 05 33 - Raceway, Boxes, Hangers and Supports for Electrical Systems, in accordance with Section 34 21 28 - Traction Power DC Insulated Conductors and Cables.

2. Provide 600 Vac single conductor wire for low-voltage panelboard feeders, low-voltage AC circuits, and 125 Vdc circuits in accordance with the following:

a. Conductor Material: ICEA stranded or solid copper meeting requirements of ASTM B3, soft drawn.

b. Conductor Type.

1) Size No. 12 AWG and Smaller: Solid conductor.

2) Size No. 10 AWG and Larger: Class B stranded.

3) Insulation: Type XHHW-2, cross-linked polyethylene insulated in accordance with NEMA WC 70 or type RHW-2, ethylene-propylene-rubber-insulated in accordance with NEMA WC 70

c. Temperature Rating: Insulation temperature rating not less than 90 degrees C in wet or dry locations.

d. Smoke/Toxicity: Where required by NFPA 130, provide low-smoke, zero-halogen insulation or outer cable jacket.

e. Fire-Retardant Properties: Ensure that power cable for emergency related equipment and emergency lighting cables comply with the flame propagating criteria of IEEE 1202. Type test certificate is required with every shipment of cables.

f. Insulation Rating: 600 V.

3. All 125 Vdc interconnecting wiring must be in multi-conductor type TC cable inside the Substation. Single conductors (not in a cable) must not be used for interconnecting power or control wiring.

4. All 125 Vdc control wiring from the emergency shutdown stations must be wired using type TC 600 V multi-conductor cable either in cable tray or conduit.

5. Single conductors (not in a cable) must be used only in conduit.

C. Splices and Terminations.

1. Use continuous lengths of wire and cable between power source and equipment. Splices are subject to approval by Resident Engineer.

2. Where splices are required and approved by Resident Engineer, make them only in approved outlet, junction or pull boxes, or in equipment cabinets. Follow manufacturer's instructions in splicing wire and cable.

3. Tools.

a. Use splice and terminator installation tools and installation techniques recommended by the manufacturer.

b. Conductor Sizes Through No. 6 AWG: Mechanical hand tools may be used, with dies for each conductor size as recommended by the manufacturer.

c. Conductor Sizes Larger Than No. 6 AWG: Use hydraulic or ratcheting tools with hexagonal or circumferential dies as recommended by the manufacturer.

d. Use compression tools which permanently imprint die information on the completed connection.

4. Insulate splices to a level equal to that of the cable.

5. Fixture Wire: Make splices in lighting circuits with insulated crimp-type connectors.

6. Control and Switchboard Cables: Terminate each wire held with screw-type terminals using a nylon insulated sleeve, ring-tongue-type or locking spade-type, crimp-on lugs.

3.13 INSTALLATION OF SUBSTATION SUB-SYSTEMS

A. Emergency Trip Stations on the Exterior of Substation:

1. Provide single Emergency Trip Station (ETS) pushbutton on the exterior of each TPSS in the specified exterior enclosure, as indicated on Contract Drawings.

2. Activation of the pushbutton de-energizes both tracks by transfer tripping adjacent substations, as specified in Section 34 21 16.23 - TES Substation LCMS and IED.

3. Traction power is manually restored from inside the TPSS after activation of ETS button.

4. See Part 2, Article titled "Station Fire Control Center ETS Panel" for FCC ETS requirements, herein.

B. Substation Shutdown Station:

1. Provide Substation Shutdown Station (SSS) pushbuttons on the interior of each substation near each entry door.

2. Activation of the pushbutton de-energizes rectifiers and rectifier transformers in the TPSS, and trips local DC feeder breakers. It does not send a transfer trip signal.

C. Smoke and Heat Detectors:

1. Ensure heat and smoke detectors are installed such that the operation of the circuit breakers will not activate the detectors.

2. Install smoke and heat detectors in accordance with NFPA 72 spacing requirements.

3. Detectors must trip the local (86) AC Lockout and (186) DC Lockout per the operation logic table.

4. Indications:

a. Detectors must transmit indications to LCMS and SCADA per the operation logic table. Each detector must have its own indication:

1) Smoke Detector 1 Alarm.

2) Smoke Detector 2 Alarm.

3) Heat Detector Alarm.

b. Provide an indication “Heat/Smoke TPSS Trip” to LCMS and SCADA that the heat/smoke detection system triggered a local TPSS trip.

5. Alarm and trip inputs into the PLC for the heat and smoke detectors must be active high inputs.

6. Operation logic table:

Smoke Detector 1	**Smoke Detector 2**	**Heat Detector**	**Indication to LCMS and SCADA**	**Local TPSS and HVAC Trip**
No Smoke	No Smoke	No Heat	No	No
Smoke	No Smoke	No Heat	Yes	No
No Smoke	Smoke	No Heat	Yes	No
Smoke	Smoke	No Heat	Yes	No
No Smoke	No Smoke	Heat	Yes	No
Smoke	No Smoke	Heat	Yes	Yes
No Smoke	Smoke	Heat	Yes	Yes
Smoke	Smoke	Heat	Yes	Yes

7. Smoke detection provides notification to LCC but does not trip the TPSS.

8. Heat detection provides notification to LCC but does not trip the TPSS.

9. If heat and smoke detectors are activated at the same time, trip the local TPSS and notify LCC.

10. A local software bypass button or keyed switch (as an input to the PLC) to bypass tripping of the TPSS must be provided for annual confidence testing of the detectors. The associated button/switch must also be supervised.

11. The PLC must have the ability to reset the detectors once the fire conditions are no longer present. This must be accomplished by interrupting power to the smoke detectors for about 15 seconds through an intuitive interface in the PLC. As an alternate to programming the PLC provide a dead-man style disconnect button for the detector power circuit on the wall of the TPSS with a small sign that reads, “Press and hold for 15 seconds to reset smoke detectors.” The button should be a mushroom-style spring loaded button that will disconnect the power circuit when pressed and held.

12. The rate of rise heat detector will automatically reset when the temperature drops and remains stable.

13. The following points must be provided to SCADA:

    a. Smoke Detection.

    b. Heat Detection.

    c. Fire Detection TPSS Trip (both smoke and heat activated together).

    d. System supervisory (integrity, short, ground, bypass for testing).

14. The PLC card(s) must be designed for circuit supervision (conductor integrity, short, and ground) for detection, power and control (shunt trip) circuits and compatibility with the detectors. Provide end of line resistor(s) for all circuits for supervision that is compatible with the LCMS PLC card and detectors, and relays used. If impractical due to lack of PLC cards capable of supervision this provision may be waived. Provide evidence of impracticality and seek concurrence from ST SME.

15. The PLC must provide 24VDC power to the smoke detectors. This circuit must be supervised by the LCMS PLC.

D. LCMS: The low-voltage alarms, including the smoke alarm and intrusion alarm, must be wired directly back to the LCMS of the Substation using #14 AWG 600 V conductors in conduit.

E. Security Card Readers: Refer to STRM Set 1203, Access - Control System, for requirements.

F. Knox Box:

1. Mount below the exterior ETS enclosure, or as directed by Resident Engineer.

2. Provide with key to ETS enclosure for access by Fire Department. Obtain Knox Box keying requirements from Fire Department.

G. Blue Light Station: Mount on exterior of substation as shown on Contract Drawings. Connect to AC circuit such that it will remain energized at all times.

H. Ac/Dc Breaker Test Station:

1. Provide at substations.

2. Wall mount, as indicated on Contract Drawings.

I. Eye Wash Station:

1. Built in-place substations: Commence installation only after room construction activities have been completed.

2. Prefabricated substations: Install as part of other equipment installation.

3. Location: Install eyewash station immediately adjacent battery cabinet, or as shown on Contract Drawings. Location shall meet requirements of ANSI Z358.1 and 296-307 WAC, Part B Accident Prevention Program, First-Aid Requirements.

4. Install eyewash station and solution cartridge(s) in accordance with manufacturer instructions.

5. Provide translucent 6-mil polyethylene sheeting as a secure and dust-proof, temporary cover over each completed eyewash station. Remove this temporary cover once room equipment and batteries have been installed and are ready for service.

6. Commission in accordance with governing regulations and manufacturer requirements.

7. Maintain in accordance with manufacturer's guidelines until Final Acceptance.

3.14 INSTALLATION OF STATION FIRE CONTROL CENTER ETS PANEL

A. Provide ETS panel at elevated and underground station's FCC or fire control panel locations.

3.15 INSTALLATION OF INTERIOR COMMUNICATIONS DISTRIBUTION CABINET

A. Provide a communications case in accordance with 27 11 16 - Communications Houses, Cabinets and Racks.

B. Wall mount as indicated on Contract Drawings.

3.16 INSTALLATION OF SUMP PUMP SYSTEM

A. Install sump pump in Substation vault sump pit. Secure per approved shop drawings.

B. Wire to AC power panel with GRS conduit.

C. Install and connect 2-inch discharge piping from pump to drainage system.

D. Provide check valve to prevent backflow.

E. Install alarms to LCMS and wire to SCADA system.

3.17 FIELD QUALITY CONTROL

A. Electrical Inspections:

1. Sound Transit may observe all electrical inspections. Electrical inspections must be scheduled a minimum of 7 Days in advance with Sound Transit and the State or local Electrical Inspectors.

2. All corrections directed by electrical inspectors must be performed by Contractor at no additional cost to Sound Transit.

END OF SECTION

SECTION 34 21 16.26

TRANSFORMER RECTIFIER UNIT

PART 1 - GENERAL

1.01 SUMMARY

A. Section includes:

1. Requirements for traction power transformer and rectifiers, which are referred to in this Section as the “Transformer Rectifier Unit” for the Traction Power Substation (TPSS).

1.02 REFERENCES

A. This Section incorporates by reference the latest revisions of the following documents:

1. National Electrical Manufacturers Association (NEMA):

a. NEMA TR 1 - Transformers, Regulators and Reactors.

b. NEMA SG 6 - Power Switching Equipment.

2. American Society for Testing and Materials (ASTM):

a. ASTM D116 - Standard Test Methods for Vitrified Ceramic Materials for Electrical Applications.

3. Institute of Electrical & Electronics Engineers (IEEE):

a. IEEE 519 - Recommended Practices and Requirements for Harmonic Control in Electric Power Systems.

b. IEEE 1653.2 - Standard for Uncontrolled Traction Power Rectifiers for Substation Applications Up to 1500 V DC Nominal Output.

c. IEEE C37.20.3 - Standard for Metal-Enclosed Interrupter Switchgear (1 kV-38 kV).

d. IEEE C57.12.01 - Standard for General Requirements for Dry-Type Distribution and Power Transformers.

e. IEEE C57.12.91 - Standard Test Code for Dry-Type Distribution and Power Transformers.

1.03 SUBMITTALS

A. Submit:

1. Product Data: Submit the following in accordance with the Contract Documents:

a. Manufacturer’s product descriptions and catalog data.

b. Bus and bus insulators.

c. Transformer winding insulation system.

d. Relays, protective devices, control switches, over temperature devices and failed diode indication devices.

e. Information concerning design and application ratings.

f. Information concerning service, performance and reliability.

g. Documents confirming the substation system rating.

2. Shop Drawings: Submit the following:

a. Manufacturer's arrangement and outline dimensions for each item of transformer- rectifier unit.

b. Detail drawings for each item of transformer-rectifier unit, including interphase transformer and transformer insulation system details.

c. Transformer and power rectifier circuit diagrams.

d. Wiring, schematic, and connection diagrams.

e. Transformer nameplate drawing with nameplate details.

f. Rectifier nameplate drawing.

g. Transformer outline drawing showing dimensions, front, back and side elevations of enclosure, overall dimensions, lifting lugs, and transformer data, including weight, impedance, and primary and secondary BIL.

h. Transformer mounting and vibration isolation details.

i. Transformer primary and secondary busing arrangements showing bus construction details and bill of materials.

j. Transformer temperature monitor/protection device schematic and wiring diagram including the location of the temperature sensor.

k. Rectifier monitoring and protection schematic and wiring diagram.

l. Transformer tap changer arrangement details.

m. Transformer enclosure, door hinge and latch details.

n. Rectifier enclosure and door latch details.

3. Engineering Calculations:

a. Transformer design calculations, including hottest spot temperature rise in accordance with IEEE C57.12.01.

b. Transformer calculation of winding temperature during a short circuit in accordance with IEEE C57.12.01.

c. Bus sizing calculations.

d. Transformer design optimization calculations.

e. Proof the transformer rectifier design and construction conforms to IEEE 519.

4. Post-Manufacturing: Submit the following upon completion of transformer manufacture:

   a. Updated load and no-load losses schedule with measured values in accordance with Table 1.

   b. Updated present worth of energy losses over 30 years with measured values.

5. Test and Evaluation Reports: Submit test procedures and test reports in accordance with Section 34 21 16.11 - Traction Power Substation Testing.
6. Operation and Maintenance Data:

   a. Submittal information identified above.

   b. Manufacturer's operating and maintenance instructions, parts list, illustrations, and diagram for components.

   c. Wiring diagram.

   d. Expected list of spare parts.

   e. Diagram showing required safety grounding during maintenance.

B. Transmit:

1. Tools:

   a. Provide one set of tools to remove or install diodes, diode fuses, and hardware for each substation.

1.02 QUALITY ASSURANCE

A. Traction Power Transformer (TPT) must be UL labeled or must be furnished with a Field Evaluation label in accordance with Section 34 21 10 - Traction Electrification System General Requirements.

B. Rectifier must be UL labeled or must be furnished with a Field Evaluation label in accordance with Section 34 21 10 - Traction Electrification System General Requirements.

PART 2 - PRODUCTS

2.01 TRANSFORMER RECTIFIER UNIT

A. Transformer rectifier unit consists of a separate traction power transformer and a rectifier, as shown on Issued for Construction Drawings:

1. Both transformer and rectifier must be identical or interchangeable or approved equal by the EOR to ST existing TPSS Traction Power Transformer Rectifier Unit.

2. Provide the unit complete with auxiliaries, controls, wireways, interconnecting ac and dc buses, enclosures, and necessary hardware, wiring and devices from the high-voltage side of the transformer to the dc bus connections at the dc switchgear and negative enclosure.

3. Except as otherwise specified, the transformer-rectifier must conform to IEEE C57.12.01, C57.12.91, 519, and 1653.2, and NEMA SG 6, and TR 1.

4. Transformer rectifier unit must convert Medium Voltage (MV), 60 Hz AC, three-phase, three-conductor primary power to 1,500 Vdc at 100 percent of full load.

5. The transformer-rectifier unit must receive ac power from the MV AC metal clad switchgear.

6. Dc output of the transformer-rectifier unit must feed the metal enclosed DC switchgear that controls and protects the power supply to the Overhead Contact System.

7. Transformer-rectifier unit must be rated as shown on Issued for Construction Drawings, measured at 1,500 Vdc at the output terminals.

8. Transformer-rectifier must be 12-pulse, double-way, in accordance with IEEE 1653.2, Circuit No. 31.

CIRCUIT NO. 31 (FROM IEEE 1653.2)

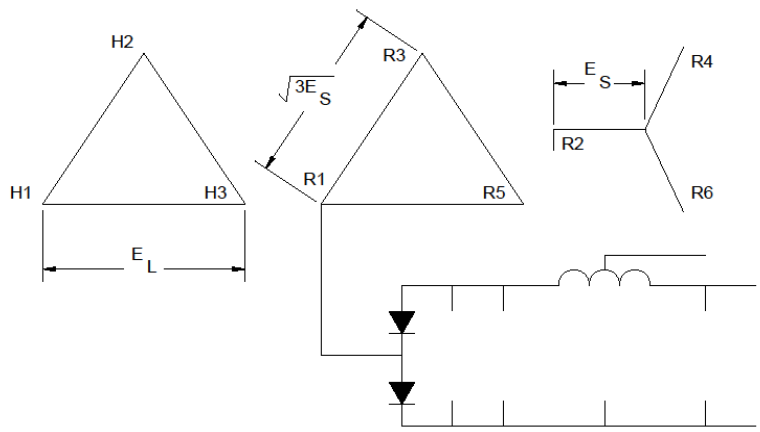

B. Design Loading Condition: Design the transformer rectifier unit to meet the duty cycle specified in IEEE 1653.2 for extra heavy traction service.

C. Efficiency: Overall efficiency of transformer-rectifier assembly must be greater than 98 percent at its continuous rating.

D. Power Factor: Displacement power factor of transformer-rectifier assembly must be 0.95 or greater from 25 percent to full load at rated ac voltage.

E. Regulation:

1. Voltage on the DC bus must be within the following limits with the nominal AC voltage maintained at the transformer primary and the transformer set at the rated voltage tap:

a. Output Dc Voltage (Volts):

Output Current	Maximum	Nominal	Minimum
No (1 percent)	1,590		
100 percent full load	1,506	1,500	1,494
150 percent full load	1,460	1,454	1,448
300 percent full load	1,332	1,320	1,308
450 percent full load	1,198	1,186	1,172

2. Resident Engineer may allow minor variations in regulation based upon submitted design curve.

F. Dummy Load:

1. Limit the no-load voltage to the value specified.

2. Provide a bleeder resistance dummy load, if required, to prevent excessive voltage rise at no-load.

G. Provide protection against transient surge voltages on the DC side of the rectifier.

H. Short Circuit Ratings:

1. Design transformer, including terminal connections and bus work, to withstand a full short circuit with shorted low-voltage terminals and rated voltage on the high-voltage terminals, in accordance with IEEE C57.12.01. The duration of the short-circuit current must be minimum 1 second.

2. Design all parts of the rectifier unit, including the terminal connections and bus work, to withstand a maximum DC fault on the DC positive bus, without damage, for the period required for the back-up protection to operate and open the AC circuit breaker.

I. Audible Sound: 70 dBA measured 3 feet from assembly under the following conditions:

1. Interphase transformer included in transformer-rectifier assembly.

2. Traction power transformer in its enclosure with all panels bolted closed.

3. Traction power transformer energized simultaneously at rated input voltage and 150 percent full load current.

2.02 TRACTION POWER TRANSFORMER

A. Provide dry-type traction power transformer of Vacuum Pressure Impregnation (VPI) construction with the following characteristics:

1. Ventilated, self-cooled Class AA/FA, at the IEEE 1653.2 extra heavy traction service power duty cycle with cooling fans and thermostats for forced air cooling:

   a. IEEE 1653.2 extra heavy traction service rating must be achieved by self-cooled condition. Fans must increase the ratings of traction power transformer by extra 33 percent without exceeding Average Temperature Rise and Maximum Hot-Spot Temperature Rise values shown below.

   b. Fans are controlled by 49 device and powered by 120 Vac.

2. Insulation Class: 220 degrees C class.

3. Temperature Rise: Limit winding hottest-spot temperature rise and average winding temperature rise to the values given in IEEE C57.12.01 for the specified insulation class.

4. The transformer must not suffer any loss of life when operated at the specified duty cycle.

B. Select the transformer impedance to provide the rectifier output voltage specified.

C. Use bolted straps and stainless-steel fasteners throughout. Tie wraps are prohibited.

D. Windings:

1. High-voltage and low-voltage windings must be copper.

2. Windings must not absorb moisture and must be suitable for both storage and operation in adverse environments, including prolonged storage in 100 percent humidity at temperature from minus 30 degrees C to 40 degrees C.

3. High-Voltage Windings:

   a. Delta-connected.

   b. 110 kV BIL for 12.5kV and 150kV BIL for 27kV.

4. Low-Voltage Windings:

   a. Connected for 12-pulse rectification.

   b. 45 kV BIL

E. Taps:

1. Provide five full capacity taps on high-voltage windings:

   a. Two above rated voltage in 1.25 percent steps.

   b. Two below rated voltage in 2.5 percent steps.

   c. One at rated voltage.

2. Tap changing shall be by movable silver-plated copper bus links for de-energized tap changing.

3. Taps shall be brought out the front of the transformer, not the top.

4. Insulate jumpers from the transformer taps to the tap changer board and primary bus and keep as short as possible so as not to interfere with access to the coils for maintenance.

5. Tap connections shall be accessible through the front hinged enclosure doors.

6. Identify tap connections so that the tap selected is clearly visible through the observation window.

7. Securely bolt the tap-changing bus links in position.

8. Design of links and connectors shall make it impossible to short out sections of windings, or to select taps outside the prescribed range, by incorrectly connecting the links.

F. Connections:

1. MV AC Switchgear: Connect the high-voltage side using cable or electrical grade copper bus with silver plated joints.

2. Rectifier: Connect the low voltage side using electrical grade copper bus with silver plated joints.

3. Provide a short length of copper braid on terminals of primary and secondary connections to the transformer terminals.

G. Supports:

1. Porcelain Insulators: ASTM D116:

a. Insulators shall be rated for the line-to-line voltage application, free of imperfections.

b. Insulators that have been re-touched with paint shall not be used.

2. Securely support the cable or bus from the transformer frame by electrical porcelain insulators:

a. The support of the cable or the bus shall be sized for mechanical strength and ability to withstand a bolted fault without distortion.

H. Bus Bars:

1. Size:

a. Size bus and supports for mechanical strength and ability to withstand a bolted fault without distortion, 1/4-inch by 2-inch minimum.

b. Size bus for a current density of 750 A per square inch, or a maximum temperature of 90 degrees C at a 40 degree C ambient, whichever results in a larger size.

2. Connections: Use a minimum of two silicon-bronze bolted connections with Belleville washers for bolted connections on high and low ac and dc buses.

3. Bus:

a. AC bus from the secondary taps on the coil to the rectifier bus shall be sized for maximum loading for IEEE 1653.2 extra heavy traction service loading.

b. AC bus duct, if used, shall be mounted high enough above rectifier enclosure to allow adequate ventilation for rectifier heat to escape through the top of rectifier.

I. Copper Ground Bus:

1. Provide a copper ground bus as specified in Section 34 21 19.13 - Traction Power Medium Voltage AC Circuit Breaker Switchgear.

J. Maintainability:

1. Design transformer so that parts which require maintenance are readily accessible from the front and rear.

2. Ensure that bottom and top of coils are readily accessible for cleaning without removing bus work, panels, or obstructions of any kind.

K. Transformer Enclosure and Base:

1. Enclosure:

a. Enclose transformer in a rigid, self-supporting, and self-contained, electrically welded or bolted, indoor, steel enclosure.

b. The structure shall be sufficiently rigid to withstand maximum transformer short circuit currents without deformation.

2. Doors:

a. Provide convenient access doors on the front and rear of the section for normal maintenance and inspection. Rear doors are not required for prefabricated substations. Doors and panels are required on the exterior of the buildings.

b. Latches: Equip each door with heavy duty latches to hold the door fully and securely closed.

c. Hinges: Stainless steel heavy-duty type.

d. Front Door: The entire front of the transformer shall open by pad lockable, hinged double doors secured by three-point latches.

e. Rear Door: The rear of the transformer shall be accessible by hinged double doors secured by three-point latches or removable panels. Both types shall be with stainless steel handles.

f. Material/Construction: No. 11 gauge minimum sheet steel properly reinforced against distortion by suitable flanges and stiffening members.

g. Window: Provide an ample sized, wired glass, gasketed observation window in the front hinged doors; position such that the tap connections are readily visible.

h. Door Stops:

1) Provide heavy-duty door stops to hold the door in the open position.

2) Not easily bent if an attempt is made to close door without releasing door stop.

3. Ventilation Louvers: Design for maximum cooling from the bottom to top.

4. Transformer Base:

a. Construct from structural steel members suitable for rolling or skidding in any direction.

b. Make provisions for pulling along the centerlines perpendicular to each side.

c. Provide jacking facilities at each of the four corners of the base to permit insertion of rollers between floor and base.

d. Base construction shall firmly secure the core to prevent relative motion of the core during shipment, handling, or seismic shock.

5. Transformer Frame: Provide lifting hooks or eyes on the transformer frame with a safety factor of four to facilitate lifting the unit.

6. Transformer Mounting: Design to minimize vibration by using vibration isolation dampers.

7. Nameplate: Provide traction power transformer with a corrosion-resistant metal nameplate marked in accordance with IEEE C57.12.01, securely fastened to front of enclosure.

8. Mimic Bus: Provide on front of transformer enclosure. See Section 34 21 19.13 - Medium-Voltage Ac Circuit Breaker Switchgear.

9. Finish: Transformer enclosure, front doors, rear doors, metallic frame, and supports shall be powder coated in accordance with Section 34 21 27 – Traction Power Metal Fabrication and Finishes.

L. AC Surge Arrester:

1. Provide AC surge arresters on the traction power transformer primary side as close as possible to primary connections to transformer.

2. Provide a separated space for AC surge arresters.

3. The space shall be separated from other parts by rigid steel or glastic / Lexan barriers, self-supporting and self-contained, electrically welded or bolted.

2.03 TRANSFORMER DESIGN OPTIMIZATION

A. Optimize the transformer design and select appropriate materials to provide unit of the lowest possible life cycle cost:

1. Definition of Life Cycle Cost: The sum of the procurement cost and the cost of energy losses over the equipment's expected life.

2. Calculate cost of energy losses as described in the following paragraphs.

B. Calculate Total Transformer Annual Energy Loss using Table 1, Transformer Loss Schedule, as follows:

1. In Column 2 provide losses using the loads indicated in Column 1, which represent the fluctuating nature of traction loads.

2. Column 2 losses include power losses in the transformer windings, steel core, and busbars, and demand requirements of auxiliary equipment, such as cooling fans.

3. In Column 4 calculate the Transformer Annual Energy Loss by multiplying the losses in Column 2 by the time intervals provided in Column 3, which are the average predicted durations of each particular loss.

4. Total the numbers in Column 4 and enter in the box at the bottom of Table 1 for the Total Transformer Annual Energy Loss.

C. Calculation of Present Worth of Energy Losses:

1. Using the Total Transformer Annual Energy Loss as determined in Table 1, calculate the Present Worth of Energy Losses over a 30-year period from the equations shown in Table 2.

2. Insert the calculated Present Worth of Energy Losses into the Bid Form

Table 1 – Transformer Loss Schedule

Description		Transformer Losses (kW)	Time Interval (Hours)	Transformer Annual Energy Losses (kWh)
P(0)	No-load loss		4380	
P(20)	Total loss at 20 percent rated power - applicable to a load range of 1 percent to 40 percent of rated power		2190	
P(60)	Total loss at 60 percent rated power - applicable to a load range of 40 percent to 80 percent of rated power		1314	
P(100)	Total loss at 100 percent rated power - applicable to a load range of 80 percent to 120 percent of rated power		788	
P(150)	Total loss at 150 percent rated power - applicable to a load range of 120 percent to 180 percent of rated power		88	
P(220)	Total loss at 220 percent rated power - applicable to a load range of 180 percent to 260 percent of rated power		0	
P(300)	Total loss at 300 percent rated power - applicable to a load range of 260 percent to 450 percent of rated power		0	
Total Transformer Annual Energy Loss E_L :				

Table 2 – Present Worth of Energy Losses

Transformer Type	Equation	Present Worth ($)
$PW = N\ E_L\ e\ (1/(1+i) + (1+k)/(1+i)^2 + ... + (1+k)^{n-1}/(1+i)^n)$		
Total Power Supply System Present Worth of Losses Used in Bid Evaluations		

The equation in Table 2 uses the following notations:

PW	Present Worth of Energy Losses
N	Number of transformer units
E_L	Total Transformer Annual Energy Losses (from Table 1)
e	Utility energy rate = 0.08 (Dollars/kWh)
i	Interest rate = 0.04 (4 percent)
k	Average energy cost escalation factor = 0.04
n	Economic life span of the equipment = 30 (years)

D. Comparison of Calculated and Measured Present Worth of Energy Losses:

1. Following transformer manufacture, measure the load and no-load losses for transformer, update Table 1 with the measured values, recalculate the Total Transformer Annual Energy Loss, and recalculate the Present Worth of Energy Losses, using Table 2.

2. In the event that the Measured Present Worth of Energy Losses exceeds the Calculated Present Worth of Energy Losses inserted in the Bid, Sound Transit will issue a unilateral deductive Change Order to deduct the excess energy costs Sound Transit will pay over the life of the transformer, as shown by the Measured Present Worth of Energy Losses.

2.04 RECTIFIER

A. Type and Rating:

1. Provide rectifier and interphase transformer as an integral part of the dc switchgear.

2. Rectifier assembly must be constructed in accordance with IEEE C37.20.3, except as modified in this Section.

3. Rectifier must be an operative assembly, consisting of silicon diodes, internal buses, terminals for connection to external power and control wiring or buses, shunts, base or bleeder load resistors, protective devices, control wiring, terminal blocks, compartments, cubicles, and all other necessary accessories.

4. Rectifier must be an integrated twelve-phase double way assembly with 12-pulse rectification as specified in this Section.

5. Rectifier must be designed for extra heavy traction service as defined in IEEE 1653.2.

6. Rectifier assembly must be identical, interchangeable, or approved equal by the EOR to existing East/ Northgate Link rectifier assemblies.

7. Rectifier unit must be capable of supplying the following 100 percent continuous rating:

   a. DC Voltage: 1500.

   b. DC Amperes: 2000.

   c. Kilowatts: As shown on Issued for Construction Drawings.

   d. DC Insulation: 3000-Volt Class.

8. All internal wires must be rated at 5 kV.

B. Enclosure:

1. Mount rectifier assembly in a metal enclosed switchgear section or compartment.

2. The switchgear section must be indoor, self-ventilated, metal enclosed structure with barriers, compartments, hinged doors as required by IEEE C37.20.3, except as modified in this Section.

3. Assemble enclosure with a rigid self-supporting structural steel framework.

   a. Structural members must be of sufficient strength to support the bus work under short circuit conditions.

   b. Principal structural members must be electrically welded or bolted together.

   c. Provide lifting eyes for lifting the rectifier unit from the top.

   d. The completed package must be capable of being skidded or rolled any direction.

   e. Provide jacking lugs at each base corner.

4. Material: Construct compartment of not less than No. 11 gauge steel.

5. Doors:

   a. Material: No. 11 gauge minimum sheet steel properly reinforced against distortion by suitable flanges and stiffening members.

b. Provide convenient access doors on the front and rear of the section for normal maintenance and inspection.

c. Latches: Equip each door with heavy-duty latches to hold the door fully and securely closed.

d. Hinges: Stainless steel heavy-duty type.

e. Provide viewing windows on doors such that condition of diode fuse indicators can be seen with doors closed.

f. Door Stops:

1) Provide heavy duty door stops to hold the door in the open position.

2) Not easily bent if an attempt is made to close door without releasing door stop.

g. Install front-mounted indicating and control devices without damaging the exposed finished surfaces.

6. Finish: Powder coat, in accordance with Section 34 21 27 – Traction Power Metal Fabrication and Finishes.

7. Color: Same as other substation enclosures.

8. Lighting: Provide interior lighting with switch on exterior of rectifier front door.

C. Bus and Connections:

1. Rectifier buses must be made of rigid, high conductivity, electrical grade copper.

2. Buses must be suitably braced between each other and to the enclosure with high-strength, non-tracking porcelain fiberglass insulators.

3. Buses must be braced to safely withstand the available short-circuit current without damage to the bus or the switchgear.

4. Where an aluminum heat sink is used and a copper bus connection is required to the aluminum, apply oxide inhibitor to the joint.

5. Bus connections must be bolted using a minimum of four bolts per joint:

a. Wherever bolted together, the mating surfaces of copper buses shall be silver-plated.

b. Bolted connections shall be made with Belleville washers.

6. Buses must extend through the compartment walls to rear bus compartment and connect to the dc switchgear.

7. Rectifier section must be designed as an integral part of the dc switchgear line up and shall be insulated from the ac and dc switchgear, substation grounds, or other enclosures.

8. Metal barriers, electrically bonded to the frame, must be provided between dc positive and negative buses and terminal connections within the rectifier.

D. DC Surge Arrester:

1. Rectifier unit must be equipped with dc surge arresters.

2. The arresters must limit the reverse voltage across rectifier silicon diodes to a value less than 75 percent of the peak-reverse-voltage rating of the diode by limiting the rise of the transient on the positive to negative bus.

3. Ensure that arresters will fail in a safe manner. The failure/explosion of a dc surge arrester must not cause live parts to be shorted to a ground/negative circuit.

E. Silicon Diodes:

1. Silicon diodes must be hermetically sealed and mounted on adequate heat sinks.

2. Diodes must be rated and tested in accordance with IEEE 1653.2.

3. At 40 degrees C ambient, the rectifier must be capable of carrying the extra heavy traction service loads specified in this Section with one paralleled diode removed from each phase arm without exceeding the safe junction temperature on the active diodes.

4. Rectifier must be able to withstand a bolted fault on the dc switchgear bus with one parallel diode removed from the phase arm without exceeding the safe diode junction temperature on the active diodes for the time it takes the ac breaker to clear the fault.

5. Each diode must be capable of withstanding, at its maximum operating temperature during blocking periods, repetitive voltages having a value 250 percent of its working peak reverse voltage without a permanent change in diode characteristics.

6. Each individual diode must have a peak inverse voltage rating equal to at least 266 percent of the applied peak inverse voltage at no load.

7. Parallel stacks of diodes must be electrically and geometrically similar and as symmetrical as practical to help balance the normal and surge electrical characteristics of each.

8. Rectifier must be designed to maintain current balance between parallel-connected diodes in each phase:

   a. The current for each diode of a parallel-connected stack must not differ from its proportionate share of the total current by more than plus or minus 10 percent, between 50 percent and 150 percent of the rated capacity.

   b. This current balancing scheme must hold individual diode currents within tolerances with one fuse in each phase arm open.

   c. Current balancing must not be achieved by use of selectively matched diodes.

9. Provide current limiting fuses with adequate interrupting capacity in series with each diode complete with a convenient visual fuse failure indication.

10. Blowing of one fuse in each phase arm must not reduce overload capacity, nor reduce short-circuit capability.

11. Size fuses to the diode current rating; they must not open or fail on any external dc fault or rated overload condition:

a. Only the fuse connected to a failed (shorted) diode must open.

b. No other rectifier diodes or fuses must fail or be damaged when one diode fails.

F. Fuses: 1500 V minimum, indicating type, drawout design.

G. Heating and Cooling System:

1. Rectifier shall be natural convection air-cooled.

a. Circulation of ambient air shall do all necessary cooling at the extra heavy traction service loading specified.

b. Cooling ducts shall not be used.

2. All rectifier cubicles must be equipped with fans that are controlled by 26 device. The fans are for extra forced air cooling capacity in addition to the natural air cooling specified above.

3. Fans must be powered by DC control power or 120 Vac isolation transformer specified in Section 34 21 16.25 - Traction Power Substation Installation. Provide minimum 300 CFM fans.

H. Maintenance: Heat transfer surfaces and characteristics must be designed for easy cleaning and to minimize accumulations of dust and other contaminants expected in the operating environment.

I. Provide mimic bus on the front of rectifier cubicles. See Section 34 21 19.13 - Traction Power Medium-Voltage AC Circuit Breaker Switchgear.

J. In accordance with this Specification, voltages other than 125 Vdc control power are not permitted within the enclosure unless a specific requirement is stated in this Contract.

K. Nameplate:

1. Provide rectifier with a corrosion resistant metal nameplate containing the following information at a minimum:

a. Name of Manufacturer.

b. Descriptive Name.

c. Type Designation.

d. Serial Number(s).

e. Output Rated Power.

f. Output Rated Voltage.

g. Output Rated Current.

h. Overload Currents - Magnitude and Duration.

i. Weight.

2.05 PROTECTIVE DEVICES AND RELAYS FOR TRANSFORMER RECTIFIER UNIT

A. Coordinate protection to prevent false tripping or malfunction.

B. Provide the status of all protection devices on Local Centralized Monitoring System.

C. Supply an insulating dust cover for each internally-mounted device or the chamber that accommodates these devices.

D. Compartment: Mount control devices, relays and protective devices within the rectifier and transformer enclosure within a separate barriered compartment in compliance with IEEE C37.20.3.

E. Mount devices in location(s) not subject to heat from wire wound resistors in rectifier compartment:

1. Devices must be readily accessible without disassembling interior portions of the rectifier assembly.

2. Control wiring must be contained within the cubicle.

3. Control wiring must be barriered from and not intermixed with 1500 Vdc power wiring.

4. No 1500 V devices must be mounted in control compartment.

F. Provide the unit with heavy-duty dc-rated limit switches for door position contacts (Device 33):

1. Locate on top and bottom of the rectifier and transformer enclosure front and rear doors.

2. Must trip and lock out the ac main breaker, open the positive main circuit breaker and annunciate an opening of a door.

3. Separate control compartments do not require Device 33.

G. Control Power:

1. Power supply for all the protective devices and relays must use 125 Vdc for auxiliary power system.

2. 125 Vdc overcurrent control must be via two-pole din-rail-mounted circuit breakers.

H. Provide transformer temperature monitor device and low voltage wiring:

1. Transformer Temperature Monitor (TTM): Device 49:

a. Must be manufactured for the purpose.

b. Must have a service proven history.

2. The TTM must incorporate a hot spot winding temperature indicator:

a. Location must be that of the highest temperature reading obtained during system design testing.

3. TTM must be provided with two-stage, electrically-independent contacts that close on rising temperatures for alarm (first stage) and tripping (second stage):

a. First stage, 49T1, must initiate a local and remote annunciation:

1) The first stage must initially be set at the temperature reached during the 2-hour heat run at 150 percent rated output and annunciate when this temperate is reached.

2) Cooling fans are started by the alarm and stop when the temperature drops below alarm level.

b. Second stage, 49T2, must initiate a local and remote alarm and must also trip and lock out the main ac breaker and open the main dc circuit breaker.

c. Set Points:

1) Temperature set points, T1 and T2, must be field adjustable.

2) Set points must be factory-preset value when transformer is provided, as required by the manufacturer, and approved by EOR.

4. Display temperature continuously on a digital display mounted on the surface of transformer panel:

a. Accuracy: Within 1.5 percent of the full-scale reading.

b. Scale: 0 to 999 Degrees C.

c. Peak Temperature:

1) Peak temperature must be displayed when requested by the activation of a front panel mounted pushbutton.

2) Peak temperature must be resettable via a separate front panel mounted pushbutton.

3) TTM must store the peak temperature reached by the traction power transformer.

5. Enclosure: NEMA 1 enclosure for low voltage terminals:

a. Cover: Hinged or screw cover.

b. Back Panel. White enamel.

6. Terminal Strips: Mount on the back panel.

7. Barriers: Provide where necessary to separate conductors with different voltage insulation ratings, such as thermocouple wiring and 125 Vdc control wiring.

8. Mounting: Securely mount enclosure to the transformer frame.

a. Mount in a location readily accessible from the front as indicated, but not to restrict access to the transformer coils for maintenance.

b. Do not mount the enclosure in removable panels.

9. Control Wiring:

a. Provide interconnecting wiring to the substation LCMS as specified in Section 34 21 16.23 - TES Substation Local Centralized Monitoring System and Intelligent Electronic Devices.

b. Control wiring in low-voltage sections must be 600 V switchboard wire, as required by the Contract., No. 14 AWG minimum, except for thermocouple wiring. Control wiring in dc sections must be 2.4 kV rated.

c. Design the control wiring for maximum IEEE 1653.2 ambient design temperature.

d. Provide control wiring in galvanized GRS conduit securely strapped to the transformer frame or base, or to the enclosure if conduit does not obstruct removable panels or doors:

1) If conduit must be secured to both frame or base and enclosure, insert a short section of liquidtight flexible metallic conduit for vibration isolation.

2) Conductors may be unprotected for a maximum of 8 inches at the point of connection.

10. Contacts: Electrically separate and suitable for operation at 125 Vdc.

I. Provide the following protective devices for the rectifier; contacts on these devices must be electrically separated:

1. Rectifier Over-temperature Device: Device 26R:

a. Over temperature device must be factory set, two stages.

b. Device 26 R1 detects abnormal rise in diode heat sink or diode temperature and initiate alarm to local and remote annunciation. Rectifier fans are started by the alarm and stop when the temperature drops below alarm level.

c. Set-point for the alarm must be set during the factory design test to the level recorded during the two-hour 150 percent heat run.

d. Device 26 R2 detects an additional rise in heat sink temperature and will trip and lock out the ac main breaker, open the main positive circuit breaker and must annunciate locally and remotely.

e. Devices must be isolated from the bus voltage.

2. Frame fault protection for the rectifier: Device 64R provides high resistance frame fault protection for the rectifier cubicles.

3. Device 98-1 detects a failed diode and initiate alarm to local and remote annunciation.

4. Device 98-2 detects 2 diodes failed in a string and will trip and lock out the ac main breaker, open the main positive circuit breaker and must annunciate locally and remotely.

5. Refer to Contract Drawings for additional protective devices.

2.06 FABRICATION

A. Transformer rectifier unit must be manufactured in accordance with the referenced standards and Section 26 05 00, Common Work Results for Electrical.

PART 3 - EXECUTION

3.01 INSTALLATION

A. Transformer rectifier unit must be installed in accordance with Section 34 21 16.25 - Traction Power Substation Installation.

END OF SECTION

SECTION 34 21 16.27

RAIL VOLTAGE MONITORING AND GROUNDING SYSTEM

PART 1 - GENERAL

1.01 SUMMARY

A. Section includes:

1. Requirements for Rail Voltage Monitoring and Grounding System device in Traction Power Substations (TPSSs).

B. Definitions

1. Rail-to-Ground Voltage Value Definitions:

a. Absolute Zero Potential: Ground potential.

b. Positive Voltage Value: Rail potential is higher than ground potential.

c. Negative Voltage Value: Rail potential is lower than ground potential.

2. Current Value Definition:

a. Positive Current Value: Current flows from rail to ground.

b. Negative Current Value: Current flows from ground to rail

1.02 SUBMITTALS

A. Submit:

1. Product Data:

a. Manufacturer’s product descriptions and catalog data.

b. Transducers, relays, thyristors and shorting switches.

c. Information concerning design and application ratings.

d. Proposed software.

e. LCD display with proposed screen shots.

f. Information concerning service, performance and reliability.

2. Shop Drawings:

a. Manufacturer’s arrangement and outline dimensions for each device.

b. Rail Voltage Monitoring and Grounding System wiring, schematic, and connection diagrams.

c. Enclosure details.

3. Test and Evaluation Reports: Submit test procedures and test reports in accordance with Section 34 21 16.11 - Traction Power Substation Testing.

4. Operation and Maintenance Data:

a. Submittal information identified above.

b. Manufacturer's operating and maintenance instructions, parts list, illustrations and diagram for components.

c. Wiring diagram.

d. Recommended list of spare parts.

B. Transmit:

1. Manufacturer’s Instructions: Description of measures used to prevent burning of contactor.

PART 2 - PRODUCTS

2.01 PERFORMANCE REQUIREMENTS

A. General

1. Rail Voltage Monitoring and Grounding System must be a separate and dedicated device which is also referred as 64V device in Section 34 21 16.23 - TES Substation Local Centralized Monitoring System and Intelligent Electronic Devices. Failure of LCMS must not affect the functionality of the device.

2. Rail Voltage Monitoring and Grounding System must have communication function:

a. Rail-to-ground voltage must be displayed on LCMS HMI (see Section 34 21 16.23 - TES Substation Local Centralized Monitoring System and Intelligent Electronic Devices) and at LCC in real time.

b. The sampling rate of the voltage/current measurement must be adjustable from 20 samples/second to 1 sample/second.

3. Rail-to-ground voltage/current historical data must be stored in device itself, LCMS, and LCC for at least 7 Days. An out-of-service situation on communication network or LCC equipment must not cause loss of historical data.

4. Provide Metal Oxide Varistor (MOV) in parallel with the shorting devices. The MOV permanently connects the negative and ground together. Provide enclosure to separate the MOV from other parts.

5. Setpoints and configuration settings must reside in non-volatile memory in the PLC:

a. Must be maintained before and after a power cycle or shutdown.

b. A power cycle must not cause setpoints, time/date, or other settings to reset to an ambiguous, unknown or default state.

c. The latest operational setpoints and configuration settings must be retained on the memory in the event of a PLC/HMI power cycle.

d. Provide R2G primary circuit monitoring feature which sends alarm to LCC when the voltage transducer is not sensing voltage due to disconnected ground or negative cable.

B. Monitoring and Grounding Functionality Requirements:

1. Rail-to-ground High Voltage Protection: Activates rail grounding device and provides at least three setting stages:

a. First Stage:

1) Voltage Setting Range: 0 to 100 V, positive or negative, in 1 V increments.

2) Time Delay Setting Range: 0 to 20 seconds in 0.1-second increments.

3) Default Setting: Plus or minus 90 V and 20 second delay.

b. Second Stage:

1) Voltage Setting Range: 0 to 190 V, positive or negative, in 1 V increments.

2) Time Delay Setting Range: 0 to 10 seconds in 0.1-second increments.

3) Default Setting: Plus or minus 150 V and 0.5 second delay.

c. Third Stage:

1) Voltage Setting Range: 0 to 340 V, positive or negative, in 1 V increments.

2) Time Delay Setting Range: 0 to 5 seconds in 0.1-second increments.

3) Default Setting: Plus or minus 340 V and 0 second delay.

2. Rail Grounding Device:

a. Activated by rail-to-ground high voltage protection.

b. Time duration of closure must be adjustable.

1) Setting Range: 1 second to 10 seconds in 0.1-second increments.

2) Default Setting: 2 seconds.

c. Operation:

1) Thyristors must always be fired and become conductive before contactor is closed.

2) Contactor must always be opened before thyristors are extinguished and become nonconductive.

3) Design to prevent burning of contactor.

3. Current Monitoring Function: Monitors current through rail grounding device after rail grounding device closes, and provides overcurrent protection with two setting stages:

   a. First Stage:

      1) Current Setting Range: 0 to 100 A, positive or negative, in 1 A increments.

      2) Time Delay Setting Range: 0 to 100 seconds in 0.1-second increments.

      3) Default Setting: Plus or minus 15 A and 50-second delay.

   b. Second Stage:

      1) Current Setting Range: 0 to 1000 A, positive or negative, in 1 A increments.

      2) Time Delay Setting Range: 0 to 10 seconds in 0.1-second increments.

      3) Default Setting: Plus or minus 100 A and 1-second delay.

   c. If the current value is lower than the first stage setting, grounding device must open after the rail grounding device time duration of closure elapses.

   d. Provide the following three customer-selectable options for operation if an overcurrent protection setting is reached:

      1) Trip and reclose DC breakers (default for second stage overcurrent protection).

      2) Trip and lockout DC breakers (default for first stage overcurrent protection).

      3) Trip and lockout DC breakers and transfer trip adjacent substations.

   e. Provide DC breaker trip and lockout function for repeated second-stage current values within a customer adjustable time window:

      1) Setting Range: 2 seconds to 60 seconds in 1-second increments.

      2) Default Setting: 60 seconds.

      3) Repeated second-stage current values occur if timer is picked up and dropped off more than once within the customer-adjustable time window.

4. Provide fail safe features to cover at least the following two scenarios:

   a. Breakdown of control component must cause grounding device to close until control component is restored.

   b. Alarm signal must be sent to LCMS and LCC if thyristor or control component fails.

5. History: Triggering alarms, failure alarms, and tripping events must be logged into rail voltage monitoring and grounding system display panel, LCMS and LCC with

time stamp. Alarm/tripping event acknowledgement shall also be logged into LCMS and LCC with time stamp.

6. System reboots must preserve the last settings

2.02 MATERIALS

A. Rail grounding: Provide high capacity thyristors and heavy duty DC contactor as the components:

1. Thyristors:

a. Continuous DC current rating: 500 A minimum.

b. Peak DC current rating: 2000 A minimum.

c. Continuous DC voltage rating: 550 V minimum.

d. Peak DC withstand voltage rating: 2000 V minimum.

e. Provide one thyristor per direction.

2. Contactor:

a. Continuous DC current rating: 150 A minimum.

b. Peak DC current rating: 1000 A minimum.

c. Continuous DC voltage rating: 550 V minimum.

d. Peak DC withstand voltage rating: 2000 V minimum.

e. Provide a position indicator for contactor.

B. Parallel MOV:

1. Continuous operating voltage: 125 Vdc maximum.

2. Peak discharge current capacity: 40,000 A minimum.

C. Hardware:

1. LCD touch screen with voltage, current displays and history of events.

2. Resettable settings via HMI password.

3. Voltage and currents in real time both digital and chart waveform.

D. Enclosure:

1. NEMA 1 metal enclosure for mounting all hardware and displays.

PART 3 - EXECUTION

3.01 FIELD QUALITY CONTROL

A. Set initially for the default settings, unless directed otherwise by the Resident Engineer.

B. Field Tests and Inspections: Test Rail Voltage Monitoring and Grounding System in accordance with Section 34 21 16.11 - Traction Power Substation Testing.

END OF SECTION

SECTION 34 21 19.13

TRACTION POWER MEDIUM-VOLTAGE AC CIRCUIT BREAKER SWITCHGEAR

PART 1 - GENERAL

1.01 SUMMARY

A. Section includes:

1. Requirements for work included for metal-clad, medium-voltage AC circuit breaker switchgear for traction power substation protection and control.

1.02 REFERENCES

A. This Section incorporates by reference the latest revisions of the following documents

1. Institute of Electrical and Electronics Engineers (IEEE)

a. IEEE C37.06 Standard for AC High-Voltage Circuit Breakers Rated on a Symmetrical Current Basis - Preferred Ratings and Related Required Capabilities for Voltages Above 1000 V

b. IEEE C37.09 Standard Test Procedure for AC High-Voltage Circuit Breakers Rated on a Symmetrical Current Basis

c. IEEE C37.12 Guide for Specifications of High-Voltage Circuit Breakers (over 1000 Volts)

d. IEEE C37.20.2 Standard for Metal-Clad Switchgear

e. IEEE C37.46 Standard Specifications for High-Voltage (>1000 V) Expulsion and Current-Limiting Power Class Fuses and Fuse Disconnecting Switches

f. IEEE C37.90 Standard for Relays and Relay Systems Associated with Electric Power Apparatus

g. IEEE C57.13 Standard Requirements for Instrument Transformers

2. National Electrical Contractors Association (NECA)

a. NECA 1Standard for Good Workmanship in Electrical Construction

b. NECA 430 Standard for Installing Medium-Voltage Metal-Clad Switchgear

1.03 SUBMITTALS

A. Submit

1. Manufacturer's descriptions, catalog data and other pertinent information concerning design and application ratings, service performance and reliability and information, necessary for the operation and maintenance of equipment.

2. Manufacturer's detail drawings for each type of switchgear assembly.

3. Manufacturer's schematic wiring and interconnection diagrams.

4. AC Coordination Study: Relays, control switches, indicating lamps, protective devices and cubicle heaters. Complete description of protection devices, coordination curves, and setting procedures.

5. AC Switchgear: Complete details of circuit breakers and draw-out mechanism.

6. Ground and test device details including terminals, ports, insulation, barriers, grounding, and octopus.

7. Testing:

   a. Test procedures for each test to be performed.

   b. Test results for each test a maximum of 10 Days after date test was performed.

B. Maintenance Material Submittals:

1. Spare Parts: Provide one spare breaker of each voltage class.

2. Serial and model number information: Provide serial numbers and model numbers for all circuit breakers, CTs and PTs, etc.

3. Tools:

   a. Provide one manual circuit-breaker racking handle at each switchgear location.

   b. Provide one manual crank at each switchgear location for charging circuit breaker operating mechanism.

   c. Provide 27kV and 15 kV ground and test devices in quantities as noted on the Issued for Construction drawings. Provide one ground "octopus" for each.

   d. Provide one transfer table at each TPSS.

1.04 QUALITY ASSURANCE / QUALITY CONTROL

A. The AC metal clad switchgear must be UL labeled or certified as conforming to the requirements of UL and IEEE by a third party testing laboratory recognized by the State of Washington.

B. Switchgear supplier must have and document a minimum of 10 years experience providing comparable switchgear and protective relays to industrial, transit or utility customers.

C. Testing:

1. Factory Tests: Must be conducted by or under the supervision of the equipment manufacturer.

2. Field Tests: Must be conducted by a NETA certified technician working for an independent testing company under the supervision of the Contractor. The NETA technician must have a minimum 5 years experience testing AC switchgear and AC

relays. The testing company must be a NETA member. Qualifications must be submitted for approval by the Resident Engineer.

1.05 DELIVERY, STORAGE, AND HANDLING

A. Deliver, store, protect, and handle equipment specified in this Section in accordance with manufacturer's requirement and NECA 430.

B. Storage of the equipment must be arranged to prevent condensation on or in all cubicles.

PART 2 - PRODUCTS

2.01 MANUFACTURED PRODUCTS

A. AC Switchgear:

1. General Requirements:

a. AC switchgear must form a line-up of dead-front, totally enclosed, free-standing switchgear suitable for indoor service.

b. Switchgear must be metal-clad and conform to the requirements of IEEE C37.20.2, except as otherwise indicated.

c. Switchgear must be manufactured in accordance with the referenced IEEE standards.

2. Ratings:

a. AC switchgear must have the following ratings:

1) Nominal Voltage: 26.4 or 12.5 kV.

2) Maximum Voltage: 27 kV rms or 15 kV rms.

3) Frequency: 60 Hz.

4) Insulation Level, 60 Hz Power frequency Withstand: 60 kV for 27KV Class Switch gear and 36KV for 15KV-class switchgear.

5) Insulation Level, Impulse Withstand: 95kV for 15 KV rated Switchgear or 125 kV for 27KV rated Switchgear.

6) Continuous Current: 1200 A.

7) Momentary Current Symmetrical: 25 kA rms for the 15KV rated Switchgear or 63KA for 27KV rated Switchgear.

8) Maximum Dimensions: 36 inches wide, 96 inches deep, 95 inches high or as noted on drawings.

3. AC SWITCHGEAR STRUCTURE

a. Construction:

1) Rigid, self-supporting and self-contained.

2) Structural elements electrically welded or bolted together.

3) No. 11 gauge minimum steel.

4) Must support equipment under normal loads, short-circuit conditions, and specified seismic conditions.

5) AC switchgear enclosure must be divided, barriered, and partitioned into separate vertical sections.

6) Paint switchgear enclosures in accordance with Section 34 21 27, TPSS Metal Fabrication and Finishes.

b. Mimic Bus:

1) Provide mimic bus across the entire front-face of the switchgear.

2) Mimic bus must be factory-applied, plastic, 3/8-inch wide and a minimum of 1/32- inch thick. Adhesive tape mimic bus is not acceptable.

3) Indicate with symbols all circuit breakers, switches, potential transformers and incoming and outgoing feeders.

4) Color: Red.

c. Circuit Breaker Compartments:

1) Suitable for accommodation of draw-out circuit breakers.

2) Provide supporting rails for the circuit breakers that allow the circuit breakers to be easily drawn in or out of their housing:

a) Circuit breakers must draw out from the lower compartment directly onto the floor. Circuit breakers in upper compartments are not allowed.

b) Provide guide rails or cradles for positioning the removable elements as an integral part of the equipment. Guides must ensure proper alignment.

3) Provide self-aligning, self-coupling, primary and secondary disconnecting devices that allow the draw out breakers to connect or disconnect from the buses and auxiliary circuits:

a) Provide automatic protective shutters to cover live high-voltage terminals and prevent accidental contact with live parts as the removable element of breaker is drawn out of the cubicle.

b) Connection of control wiring to the AC breaker must be by sliding contacts. A plug-style disconnect is acceptable, provided the breaker cannot be mechanically racked into the connected position with the plug disconnected.

4) Provide a manual racking mechanism for horizontal draw-out of each circuit breaker:

a) Mechanism must have three circuit breaker positions: Disconnected, test, and connected.

b) Provide positive stops to prevent over-travel at each position.

c) Mechanism must be designed for racking of circuit breaker in and out of connected and disconnected position with the compartment front door in the closed and latched position.

d) When the breaker is in the connected and test positions, the case and frame must be grounded by means of a positive contact with a copper ground bus.

5) Provide remote-racking system including linkages, motor mechanism, and control station with umbilical cord. Racking must be possible by a worker located at least ten feet to either side of the affected circuit breaker compartment. Provide one remote-racking system for each TPSS.

6) Provide the following interlocks:

a) Prevent either electrical or manual operation of the breaker unless it is in the Connected or Test position.

b) A positive mechanical interlock must prevent racking in or out unless the breaker is in the Open position.

c) Circuit breaker, complete with the operating mechanism must be capable of being removed from the enclosure only in the disconnected position.

d. Control/Terminal Board Compartment.

1) Controls, including programmable controllers, instrumentation, control relays, terminal boards, control wiring and control devices must be housed in a separate control/terminal board compartment.

2) Compartment must be barriered from the power wiring and bus work compartments.

a) Exception. Where controls and terminal boards are dedicated to circuit breaker function, they may be located in the circuit breaker compartment.

3) Protective relays, meters, instruments and control devices must be mounted on front compartment doors.

e. Access Doors.

1) Access to all components must be from the front and the rear. When doors are opened to 120-degree stop position, it must be possible to open adjacent cubicle doors.

2) Equipment access panels located on the side or top of the enclosures are prohibited.

3) Provide each compartment with separate hinged front and rear access doors for servicing.

4) Opening of any front door must not expose circuits in adjacent compartments.

5) Construction:

a) No. 11 gauge minimum sheet metal.

b) Properly reinforce against distortions using suitable flanges and stiffening members.

6) Hinges: Stainless steel heavy-duty type.

7) Latches:

a) Doors must be securely fastened in the closed position with a three-point latch easily opened without the use of tools.

b) Two latches will be allowed if front panel consists of more than one full- length door.

8) Handles: Provide each door with a heavy duty-handle.

9) Door Stops: Provide each door with a heavy-duty stop to hold it securely in the open position.

f. Heaters:

1) Provide heating strips in each cubicle. Operating voltage for heating strips must not exceed 50 percent of heater rated voltage.

2) Provide an individual thermostat to control heater in each cubicle. Locate in a general area such that cool air in the lower portion of the cubicle can be sensed by the thermostat.

g. Lights: Provide linear LED lighting strips, mounted vertically in the left and right front corners of the control/terminal board compartment of each cubicle and directed at the control/terminal panel. Lighting strips to be 18 inches minimum in length and provide accurate rendering of wire colors.

h. Warning Signs:

1) Front Access Doors: Sign on each stating "DANGER: LIVE PARTS" and "DANGER: HIGH VOLTAGE."

2) Rear Access Doors:

a) Sign on each stating "DANGER: LIVE PARTS" and "DANGER: HIGH VOLTAGE."

b) Sign on each removable Glastic panel inside access door stating, “DANGER: HIGH VOLTAGE.”

B. Medium -Voltage Circuit Breaker:

1. General Requirements:

a. Circuit breaker must be a draw-out type and utilize vacuum interrupters having load and fault break capabilities and must conform to or exceed the requirements of IEEE C37.06 and IEEE C37.12.

b. Circuit breakers must be identical and physically and electrically interchangeable.

c. Circuit breaker frame must be provided with a full front metal shield to prevent access to any live primary bus or load terminals when the circuit breaker is in the connected position.

d. Provide a truck or fifth wheel at each switchgear location to facilitate one-person breaker removal and turning.

e. Provide means for padlocking the AC breaker in the open position.

f. Circuit Breaker Insulation:

1) Noncombustible, non-hygroscopic and track-resistant.

2) Mechanical strength and physical characteristics must match the stresses imposed by the circuit breaker rated momentary current.

2. Minimum Ratings:

a. Nominal System Voltage: 26.4Y/15.2 kV or 12.5Y/7.2 kV three-phase, solidly grounded.

b. Maximum Voltage: 27 kV rms or 15 kV rms.

c. Frequency: 60 Hz.

d. Insulation Level, 60 Hz: 36 kV, rms for 15KV Class Switchgear and 60KV for 27KV class Switchgear.

e. Insulation Level, Impulse: 95KV crest for 12KV AC Switchgear and 125 kV, crest for 26KV AC Switchgear.

f. Short Circuit Current at Maximum Voltage: 25 kA rms.

g. Continuous Current: 1200 A.

h. Closing and Latching Capability: 62 kA rms.

i. Fault Clearing Time: 5 cycles max.

3. Circuit Breaker Operating Mechanism:

a. Motor-charged and spring-operated unless otherwise approved by the EOR.

b. Mechanism must be designed to prevent overcharging.

c. The mechanism must ensure that the release of stored energy for closing the circuit breaker main contacts is prevented unless the mechanism has been fully charged.

d. The stored-energy closing mechanism must automatically charge itself within 15 seconds after closing of the breaker.

e. Energy storage must be sufficient for an open-close-open cycle at maximum rated short circuit current.

f. A manual cranking feature must be included on the operating mechanism to permit spring charging in the event motor power is unavailable. Provide an interlock to prevent withdrawal of the circuit breaker from the enclosure when the mechanism is in the fully charged state:

1) Automatic controlled discharge of the stored energy when the circuit breaker is withdrawn from or inserted into the enclosure will also be acceptable.

g. Circuit breaker must be electrically and mechanically trip free. The operating mechanism must be non-pumping.

h. Provide a four-digit, non-resettable, register-type mechanical operations counter on each circuit breaker to record each close/open cycle.

4. Circuit Breaker Control:

a. Control Voltage: 125 Vdc.

b. Closing Mechanism: Provide with a spring release coil, anti-pump relay and spring charging motor suitable for operation over a voltage range from (100V-140V dc).

c. Tripping Mechanism: Provide with a shunt trip coil suitable for operation over a voltage range from (70V-140Vdc).

d. Install Main AC Breaker Manual Control Switch to have a mechanical lockout position without the need to rack-out the Main AC Breaker with the following Statuses: Open/Trip, Closed, Test, and Lockout.

e. Control Switches:

1) Open/Close: Switchboard type heavy-duty pistol-grip control. Control switch must permit open and close operations when the circuit breaker is in the connected or test position.

2) Provide a switch for resetting the circuit breaker after a trip and provide a mechanical trip indication at the control switch.

3) Local/Remote (Device 43): Switch mounted on the front of the cubicle. Provide positive stops in both positions.

f. Auxiliary Contacts: Provide a minimum of six electrically separate sets of reversible auxiliary contacts, in addition to those required for the circuit breaker control circuit:

1) Auxiliary contacts must be operated by the breaker mechanism in both the Connected and Test positions.

2) Spare auxiliary contacts must be wired to the outgoing terminal blocks.

5. Trip Circuit Monitor:

   a. Provide a trip circuit monitor for monitoring the trip coil on each AC circuit breaker and lockout relay.

   b. The tripping circuit must be daisy-chaining control power including the trip coil relay monitoring. The trip coil monitor must be at the end of the circuit in order to monitor the entire trip circuit.

   c. Monitor must have Normally Open (NO) and Normally Closed (NC) Form C contacts for indication of a failed trip coil.

   d. Monitor must have a 200 millisecond delay to allow for auxiliary contacts to transfer.

   e. Control Power: 125 Vdc.

   f. Trip coil status must be monitored by SCADA.

   g. Manufacturer: E-max RAW-1D or approved equal by the EOR.

6. Indicating Lights:

   a. Provide indicating lights on the front of the circuit breaker enclosure to indicate the state of the circuit breaker:

      1) Closed Breaker: Red light.

      2) Tripped or Open Breaker: Green light.

   b. Provide an amber LED above each local/remote switch that illuminates to indicate switch is in local position.

   c. Provide a white LED indicating light on the front of the circuit breaker enclosure to indicate the stored-energy closing mechanism is charged.

   d. Trip Circuit Monitor:

      1) Provide a green LED that illuminates when the trip coil is energized and turns off when the coil is de-energized.

      2) Provide a red LED that illuminates upon failure of the trip coil.

   e. LEDs:

      1) Plug-in replaceable with a life of 100,000 hours.

      2) Protected against reverse polarity by a diode.

7. Lock Out Relay (Device 86): When the main AC circuit breaker is tripped by the lockout relay, the following sequence of events must occur:

   a. DC positive main circuit breaker must be opened for traction power substations.

   b. AC breaker must be locked out until manually reset.

2.02 BUSES AND CONNECTIONS

A. Main horizontal three-phase bus must be fabricated from silver-plated, electrical grade copper and extend the full length of the switchgear.

B. Bus, including joints, must be insulated the full length with flame-retardant, non-hygroscopic, track-resistant insulation over its entire length rated 36kV for 15KV AC Gear and 60KV for 27KV AC Gear. The method of bus insulation and the insulating material must conform to ANSI C37.20.2.

C. All connections, including bus taps, circuit breaker connections, connections to CTs and PTs and transformers, must be bussed using the same material as the main horizontal bus with silver plated copper and joined with a minimum of two bolts and Belleville washers per joint. After final torquing all bolted connections must be torque striped. Cable connections are not permitted.

D. Hardware must be silicon bronze.

E. Continuous current rating of all main bus and circuit breaker connections must be at least 1200 A.

F. Buses and bus connections must be adequate to withstand thermal and mechanical stresses associated with short-circuit currents equal to the momentary and 2-second rating of the circuit breaker.

G. A copper ground bus, not less than 2 inch by 1/4 inch, must extend the length of the AC switchgear assembly and be bonded to each switchgear section by solidly bolting the bus to a non-removable structural member. After final torquing all bolted connections must be torque striped.

2.03 UTILITY INCOMING SECTION

A. Provide supplementary equipment as required to connect switchgear relays and power meter to Sound Transit SCADA system.

B. Provide utility metering sections as noted on Issued for Construction Drawings for substations meeting EUSERC requirements and complying with Utility standards.

2.04 PROTECTIVE RELAYS

A. Protective relays must be of the microprocessor-based IED(Intelligent Electronic Devices) type capable of interconnecting with programmable control (PLC) supervisory devices and must be flush mounted, with wiring connections on the back of the relay.

B. Protective relays must be provided with test switches.

C. Protective relays must have rustproof metal or high-impact plastic rectangular cases.

D. Contacts must be silver-plated and non-welding. Provide relays conforming to the applicable sections of IEEE C37.90.

E. Devices including switches, relays, indicating lights and test plugs must be arranged to be conveniently accessible and easily visible. The grouping must be modular and place related functions in proximity.

F. Devices must be mounted plumb and square with the lines of the panels and as required by the manufacturer. Relays or devices must be mounted on hinged or removable panels and must not be mounted on a fixed portion of the switchgear.

G. Design metering compartment to avoid wiring congestion. Auxiliary devices must match the general appearance as far as possible with frames of a compatible color.

H. Devices of the same general type must be manufactured by the same company and must be similarly arranged and mounted.

I. At a minimum, the following protective and monitoring devices must be provided as shown on the one-line drawings on Issued for Construction Drawings. Additional protective devices required by Designer or equipment manufacturers must be installed with Resident Engineer approval. The protective and monitoring devices listed below but not limited to must be provided:

1. Phase Fault Overcurrent Relays:

   a. The primary function of the phase overcurrent relays (Device 50/51) must be to provide overload and fault protection for loads served.

   b. Relays must be designed to compile a composite time overcurrent characteristic curve which must best match the normal and overload requirements of the load and to match the thermal and mechanical withstand of transformers.

   c. Each relay, (Device 50/51) must provide for both instantaneous and time delay overcurrent protection.

2. Ground Fault Overcurrent Relay:

   a. A residual instantaneous and time delay relay (Device 50N/51N) must be provided and connected in such a way as to provide sensitive ground fault detection.

   b. This relay must be field adjustable.

3. Loss of Phase/Phase Sequence:

   a. The three-phase voltage protective relay (Device 47) must be provided and connected in such a way as to provide open-phase protection.

   b. This relay must contain a field adjustable time delay.

4. Undervoltage:

   a. The primary function of the undervoltage relay (Device 27) must be to trip and annunciate an AC input voltage of less than 80 percent of the nominal voltage.

   b. This relay must also trip and annunciate a loss of voltage due to utility outage.

   c. This relay must be provided with a 0.5 to 4 second adjustable time delay before tripping.

5. Reverse Power:

   a. Provide reverse power (Device 32) protective relaying function in incoming feeder cubicles connecting to utility service switchgear. This device must trip and lock-out associated circuit breaker when it detects a flow of power from Sound Transit back toward the utility.

6. Lockout:

a. Lockout relay (Device 86) must be provided on the AC circuit breaker compartment. A pistol-grip switch must be provided for resetting of the lockout relay.

b. Provide indication of "lockout" and "normal" at the reset switch.

2.05 INSTRUMENTS AND METERS

A. The accuracy of all indicating instruments must be within 1 percent of full scale reading.

B. Voltmeters and ammeters must be suitably rated for use with the corresponding transformer.

C. Scales must be of a suitable range, equal to the associated potential or current transformer primary rating.

D. Provide incoming-line phase-selector switches for connection to the line transformers for the ammeter and voltmeter.

E. Provide power meter as required by the Contract

2.06 INSTRUMENT TRANSFORMERS

A. Instrument transformers must conform to IEEE C57.13, with the additional requirements indicated below.

B. Current Transformers:

1. Must be capable of withstanding thermal and mechanical ratings of the circuit breaker.

2. Molded-rubber or epoxy construction, wound-type or bushing-mounted.

3. Wound-Type Current Transformers:

a. Provide separate compartment isolated from the control panel and all other equipment.

b. Provide a mounting frame which bolts securely to the switchgear frame.

c. Transformers must have full-wave impulse insulation level of 125 kV.

d. Secondary terminal blocks must have covers with integral shorting bars and secondary wiring must be run to readily identifiable terminal block points in the control compartment.

e. Terminal block points must also have integral shorting bars for the current transformer leads.

4. Bushing-Type Current Transformers:

a. Low-voltage, ring-core, high-accuracy type designed for secure mounting on the primary contact support bushings.

5. Accuracy:

a. Protective Relaying: Current transformers must satisfy the requirements for relaying accuracy classification, under the burdens imposed by the devices specified in this specification.

b. Power Meters:

1) Current transformers must be metering class 0.15 at burden B0.2.

2) If this metering accuracy is not available, perform an analysis of expected accuracy of metering equipment for loads from 1 percent to 100 percent of actual load rating and submit for approval.

3) Bushing current transformers that will not provide accuracy of plus or minus 0.3 percent at 10 percent load and plus or minus 0.5 percent at full load will be rejected and require installation of wound-type current transformers.

C. Potential Transformers:

1. Drawout-type, molded-rubber or epoxy construction.

2. Transformers must have full-wave impulse insulation level of 150 kV.

3. Primary and secondary circuits of all potential transformers must be fused by means of non-renewable cartridge-type fuses meeting requirements of IEEE C37.46.

4. Grounding: The potential transformer must be visibly grounded when the primary circuit is disconnected and in position for inspection.

5. Fuses:

a. All primary fuses must be completely disconnected before access can be obtained to either the transformer or its high-voltage fuses.

b. Secondary circuit fuses must be installed in the low-voltage circuits and must be located to permit replacement when the switchgear is in operation.

6. Rating: All potential transformers must be adequately rated in accordance with the burden requirements of the accuracy classification and capable of carrying rated load continuously without excessive heating or damage.

7. Accuracy: Potential transformers for power meters must have accuracy class 0.3 at W, X, M, and Y burden.

2.07 SCADA

A. Devices furnished under this Contract must be provided with additional terminations within their respective control enclosures for connection to the TPSS Local Centralized Monitoring System which includes interface with the Sound Transit supervisory control system. Refer to ‘Issued for Construction Drawings’ for typical SCADA points for each type of circuit breaker.

2.08 GROUND AND TEST DEVICE

A. Ground and test device must be readily adaptable to line or load terminals, which can be connected onto individual phases with ground connector for external connection to station ground. Provide standard “ball” type connectors for positive connection to studs on ground and test device terminals.

B. Device must be capable of being racked into cubicle with circuit breaker racking handle.

C. Line and load terminals and phases must be separated by barriers.

D. Provide ports on front of ground and test devices for insertion of standard “Biddle” high voltage tester and grounding “octopus”.

E. Provide visual means of viewing line and load terminals.

F. Device must be continuously grounded as it is inserted into cubicle.

G. Ground Octopus:

1. Three-phase.

2. Connectors: Three ball/socket-type, compatible with grounding studs on ground and test device and one C-clamp type for connection to ground bus.

3. Readily connected with a hot stick.

4. Length: Sufficient to allow connection to the closest ground bus when ground and test device is fully inserted into each AC breaker cubicle.

2.09 TRANSFER TABLE

A. Provide transfer tables for removing and lowering PTs and draw-out fuse trunions.

B. Table must be capable of being raised and lowered hydraulically from floor to trunion levels.

2.10 SOURCE QUALITY CONTROL

A. Factory Design Tests:

1. Tests must consist of all design tests as specified in IEEE C37.20.2.

2. Perform tests on the AC switchgear assembly and each component of the AC switchgear.

3. The main AC circuit breaker test must be performed in accordance with the design tests as described in IEEE C37.09.

B. Factory Production Tests:

1. Perform on AC switchgear in accordance with IEEE C37.20.2:

a. Dielectric tests.

b. Mechanical operation tests.

c. Electrical operation and control wiring tests, except that the control wiring continuity must be verified by actual electrical operation of control devices.

d. Grounding of instrument transformer cases.

2. Perform on each AC circuit breaker in accordance with IEEE C37.09 prior to mounting inside AC switchgear:

a. Nameplate check.

b. Control and secondary wiring checks.

c. Clearance and mechanical adjustment check tests.

d. Mechanical operation tests.

e. Timing tests.

f. Stored energy system tests.

g. Conductivity of the current path test.

h. Low-frequency withstand voltage tests on major insulation components.

i. Current transformer.

j. Resistors and coils.

3. Meters, Instruments and Instrument Transformers:

a. Check for accuracy, performance and operation in accordance with IEEE C57.13.

PART 3 - EXECUTION

3.01 INSTALLATION

A. Switchgear must be installed in accordance with manufacturer's installation instructions, NECA 1, and NECA 430.

B. All factory and field bolted bus connections must be torqued with a calibrated torque wrench and apply ST approved torque seal immediately after torquing.

3.02 PROTECTIVE DEVICE COORDINATION

A. Perform a Coordination Study for the AC system to ensure that the protective devices will function together, in conformance with Section 34 21 73 - TES System Studies.

3.03 SURGE ARRESTER GROUNDING

A. The surge arrester ground terminals must be connected directly to the switchgear ground bus connected to the station grounding electrode. Surge arresters in Service Switchgear are furnished by Utility provider.

3.04 FIELD QUALITY CONTROL

A. AC Switchgear:

1. The following tests must be performed after installation of the AC switchgear:

a. Continuity and insulation resistance tests phase-to-ground and phase-to-phase, for all buses with a 2500 Vdc megohmmeter for one minute.

b. High potential test to ground and between phases on medium-voltage buses with circuit breakers racked-in and closed.

c. Verification of proper operation of each interlock and protective device.

d. Test of each AC protection relay using a three-phase current/voltage injection test device. Test device must have the following functions:

   1) Current/voltage magnitude.

   2) Frequency and angle are adjustable per phase.

   3) Internal digital timer is programmable to start and stop.

e. Each AC coordination study recommended AC relay protection setting must be verified and tested.

f. Verify the current transformer ratio set in the relay matches the ratio being used. If a multi-ratio transformer is being used, verify the tap installation.

END OF SECTION

SECTION 34 21 19.16

DC SWITCHGEAR

PART 1 - GENERAL

1.01 SUMMARY

A. Section includes:

1. Requirements for DC switchgear and section tie breakers.

1.02 REFERENCES

A. This Section incorporates by reference the latest revisions of the following documents:

1. IEEE:

a. IEEE C37.14 - Standard for DC (3200 V and below) Power Circuit Breakers Used in Enclosures.

b. IEEE C37.16 - Standard for Preferred Ratings, Related Requirements, and Application Recommendations for Low-Voltage AC (635 V and below) and DC (3200 V and below) Power Circuit Breakers.

c. IEEE C37.20.1 - Standard for Metal-Enclosed Low-Voltage (1000 Vac and below, 3200 Vdc and below) Power Circuit Breaker Switchgear.

2. Underwriters Laboratory(UL):

a. UL 1449 – Standard for Surge Protective Devices.

1.03 SUBMITTALS

A. Submit:

1. Product Data: Complete manufacturer's product descriptions and catalog data, including information on the following:

a. Design and application ratings.

b. Service performance, reliability and proven service history record.

c. Relays, controls, switches, indicators, load measuring devices, resistors and cubicle heaters.

d. Key Operated Mechanical Interlock: Catalog data.

2. Shop Drawings:

a. Manufacturer's Drawings:

1) Arrangement drawings.

2) Schematic wiring diagrams.

3) Interconnection diagrams.

4) Mechanical plans of circuit breakers and cubicles and cross sections thereof.

b. Complete details of transfer trip scheme and remote trip scheme for the DC breakers and their interfaces with the fiber optic links.

c. Mechanical interlocking scheme, including description, and detailed arrangement drawings.

d. Mimic bus design.

3. Test and Evaluation Reports: Submit test procedures and test reports in accordance with Section 34 21 16.11 - Traction Power Substation Testing.

4. Operation and Maintenance Data:

a. Submittal information identified above.

b. Manufacturer's operating and maintenance instructions, parts list, illustrations and diagram for components.

c. Wiring diagram.

d. Recommended list of spare parts

1.04 QUALITY ASSURANCE

A. DC Switchgear: UL labeled or furnished with a Field Evaluation labels in accordance with Section 34 21 10 - Traction Electrification System General Requirements.

PART 2 - PRODUCTS

2.01 GENERAL

A. DC Switchgear: Dead-front, self-ventilated, metal enclosed, free standing, sheet steel enclosures suitable for indoor service.

B. Provide access to removable components of the switchgear from the front.

C. Locate bus and power wiring in the rear.

D. Provide switchgear with individually enclosed, draw-out type, high speed, power circuit breakers rated for use with the transformer-rectifier unit.

E. Include DC buses and connections, positive or negative feeder cable terminal connections, indicating lights, terminal blocks, protective and auxiliary relays, control circuitry, wiring and all other devices necessary to make a complete and operable switchgear assembly.

F. Design, materials, construction, and tests must be in accordance with IEEE C37.14 and C37.20.1 and as further described or modified in this Section.

2.02 RATINGS

A. The switchgear assembly and circuit breaker must have the following minimum ratings in accordance with IEEE C37.14 and IEEE C37.16:

	Feeder	Main
Full-Load Voltage	1500 Vdc	1500 Vdc
Maximum Voltage	1900 Vdc	1900 Vdc
Continuous Current	4000 A	6000 A
Minimum frame size	4000 A	6000 A
Insulation Level:		
60 Hz withstand	5.6 kV, rms	5.6 kV, rms
Short circuit rating:	100 kA, peak	100 kA, peak

2.03 SWITCHGEAR ENCLOSURE

A. Switchgear Structure:

1. Steel, rigid, self-supporting, self-contained, conforming to IEEE C37.20.1 and to requirements indicated below.

2. Fabricated of electrically welded or bolted No. 11 gauge minimum steel.

3. Provide enclosures sufficiently rigid to support equipment under normal loads, short-circuit conditions, and specified seismic conditions.

4. Apply powder coat finish to switchgear assembly in accordance with Section 34 21 27 – TES Metal Fabrication and Finishes.

B. Doors:

1. Material: No. 11 gauge minimum sheet steel properly reinforced against distortion by suitable flanges and stiffening members.

2. Hinges: Heavy duty stainless steel.

3. Handle: Heavy duty, easily operated, one for each door.

4. Latches: Minimum of three latches must securely fasten door in the closed position and must be easily opened without the use of tools. Two latches will be allowed if the front panel consists of more than one full-length door.

5. Door Stops: Heavy duty to hold door securely in the open position. Not easily bent if an attempt is made to close door without releasing door stop. Provide opening door swing of 120 degrees.

6. Doors must be electrically connected to the enclosures with bonding jumpers.

C. Lighting: Provide lighting and switching in each cubicle complying with Section 34 21 16.17 - Prefabricated Traction Power Substation Building.

D. Heating: Provide two thermostatically-controlled strip-type heaters in each cubicle to prevent condensation.

1. Operating voltage for heating strips must not exceed 50 percent of heater rated voltage.

2. Provide an individual thermostat for each cubicle.

3. Locate thermostat in a general area of each cubicle so that cool air at the lower portion of the enclosure can be sensed by the thermostat.

4. Power heaters from 120 Vac auxiliary power system using an isolation transformer, as specified in Section 34 21 16.21 - TPSS – Control Power.

E. Warning Signs:

1. Provide "DANGER: LIVE PARTS" and "DANGER: HIGH VOLTAGE" signs on front, rear, and side access doors of cubicles where 1500 Vdc wiring is present.

2. Provide “DANGER: HIGH VOLTAGE” signs on removable Glastic panels inside rear access doors.

F. DC Circuit Breaker Cubicle:

1. Suitable for accommodation of drawout circuit breakers.

2. Provide supporting guide rails for positioning the removable elements as an integral part of the equipment.

3. Design such that circuit breakers are easily drawn in or out of their housings.

4. Include stationary disconnecting device contacts for the circuit breakers.

5. Breakers must connect or disconnect from buses and auxiliary circuits by means of self-aligning, self-coupling, primary and secondary disconnecting devices.

6. Provide self-alignment mechanisms such that misalignment of contact is not possible when circuit breaker elements make contact with stationary contacts.

7. Connection of control wiring to the DC breaker may be by movable contacts or by a plug-style disconnect:

a. Plug style disconnect:

1) It must not be mechanically possible to rack breaker into the connected position with the plug disconnected.

2) Locate where easily accessible. Resident Engineer will make final determination whether location is easily accessible.

3) Provide heavy-duty connection hardware not easily bent or broken due to mishandling.

8. Provide suitable shrouds or automatic safety shutters on devices to prevent accidental contact with live parts.

9. Provide each enclosure with protective shutters that cover live high-voltage terminals when the access door is opened or a DC feeder breaker is racked out of the cubicle.

10. Provide each compartment with a hinged door or full width drawout panel for front access to the circuit breakers, instruments and terminal blocks.

11. Provide rear access doors to facilitate access to the DC power bus. Doors must swing fully open against the adjacent door or enclosures. Coordinate cubicle rear access doors with substation enclosure access doors to provide complete access to rear of all cubicles.

12. Provide connections to the DC feeder cables in the rear compartment.

13. Construct enclosures to allow for the dissipation of ionized gas from the circuit breaker arc chutes without hazard to personnel from the discharge of hot gas or other materials:

    a. Release gas from the units to the outside of the enclosure by means of suitable stacks, louvered vent openings, or vent openings covered with grilles.

    b. Provide adequate clearance to ground to prevent the possibility of establishing a conducting path to grounded structure or objects when interrupting maximum short-circuit energy at rated maximum voltage.

    c. Line enclosure surfaces exposed to arcs or ionized gases with flame resistant, high dielectric insulating materials.

    d. This paragraph is not intended to require the use of arc-resistant switchgear.

14. Stacking of DC circuit breakers in cubicles is not permitted.

G. Negative Switch Cubicle:

1. Provide a separate isolated compartment or cubicle with a hinged door containing a clear window in the panel for viewing the position of the negative switch.

2. Negative switch must be isolated from rectifier.

H. Separate high-voltage devices from low-voltage controls and make readily identifiable by color coding mounting panel:

1. No controls are allowed in rear cable or bus compartment.

2. Adhesive wire supports are not acceptable.

3. All control wire in high-voltage cubicles must be 2.4 kV rated.

I. No dedicated control compartment is required. The control devices can share the same compartment with the protection devices:

1. Control/protection compartment must be dead-front and must consist of hinged swinging panels mounted on the switchgear frame:

    a. Construct swinging panel doors to support flush and semi-flush mounted devices.

    b. Swinging panel doors must not distort from a plane surface in any position.

    c. Swinging panel doors of control/protection compartment must be supported by stainless steel hinges.

    d. Panel doors must swing open and provide free access to the area behind the panel, the rear of the devices mounted on the panels, wiring, terminal blocks, and auxiliary devices mounted within the compartment.

    e. Secure swinging panel doors in the closed position with two positive latching or screwed fasteners that can be operated by hand without tools.

f. Swinging panel doors must open 90 degrees and be held with heavy duty stops.

g. Open doors to allow removal of circuit breaker elements from adjacent cubicle(s).

2. Provide Surge Protective Device (SPD) for control power circuit in each Control/Protection compartment:

a. The SPD must be UL-1449 listed, with minimum 10 kA nominal discharge current, plug-on and hot swappable type.

b. The SPD voltage level must be rated according to field control power voltage level and must be equipped with operational status LED.

c. The SPD must be with thermally protected metal oxide varistor (MOV).

2.04 NEGATIVE DISCONNECT SWITCH – 89N

A. Provide a negative DC disconnect switch (Device 89N) mounted in negative switch cubicle in each substation DC switchgear assembly, as shown in the Contract Drawings:

1. Install between the negative return cable and the rectifier negative pole.

2. Rated to carry 6000 A continuous current at 1500 Vdc and withstand bolted short-circuit currents of 50,000 A.

3. Insulation level must be sufficient to pass 1 minute 60 Hz dry withstand test at 5.7 kV, rms.

4. Manually-operated, single-pole, jaw-pressure-type, solid copper blade with silver plated contacts and an insulated operating handle.

B. Design with interlocking feature to ensure it can be opened only under no-load:

1. Key interlocked with the positive main DC circuit breaker to prevent main DC circuit breaker from closing when the negative disconnect switch is open. The interlock must also prevent negative disconnect switch from opening when the main DC circuit breaker is closed.

2. Interlock requirements as follows:

a. Key removal from the negative disconnect switch must be possible only when the negative disconnect switch is closed.

b. Opening of negative disconnect switch must require the key to be inserted in the negative disconnect switch.

c. With the key removed from the main DC circuit breaker it must be mechanically locked open and the electrical closing circuitry must be disabled.

C. Provide a green and a red indicating light on the front panel of cubicle:

1. Green Illuminated: Switch open.

2. Red Illuminated: Switch closed.

D. Provide a simple operation instruction nameplate on the cubicle door.

2.05 CIRCUIT BREAKERS

A. Main switching and interrupting device of the DC breakers must be of the removable type arranged for moving physically between connected, test and disconnected positions.

B. DC circuit breakers and tie breakers of the same type and rating must be identical and physically and electrically interchangeable.

C. DC Circuit Breakers: Single-pole, air-break, high-speed, removable type:

1. Manufactured in accordance with IEEE C37.14, and rated according to the preferred ratings listed in IEEE C37.16, except as modified in this Section.

2. Suitable for local and remote supervisory control.

3. Electrically operated and electrically and mechanically trip-free with the mechanism ensuring full contact pressure until time of opening.

4. Insulated to withstand 5.6 kV, rms at 60 Hz for 1 minute.

5. Peak rated momentary current, feeder and main breakers: 100 kA, minimum.

D. Provide each main and DC feeder circuit breaker with a direct-acting, non-directional, instantaneous overcurrent tripping device (Device 76) adjustable between 200 percent and 400 percent of the breaker rating.

E. Set direct-acting, non-directional, instantaneous overcurrent tripping device (Device 76) initially at 200 percent of the DC feeder breaker rating.

F. Contacts:

1. Surfaces of the moving and stationary contact members of the main contacts must be silver, non-welding silver alloy, or equivalent that combines high conductivity and necessary arc-resistant properties.

2. Main and secondary contacts of breaker must be removable for replacement.

G. Operating Mechanism:

1. Solenoid-operated or motor-charged stored-energy, spring-operated type.

a. In the event the breaker does not close or the closing control circuit is not opened, a trip sequence must be initiated to open the closing control circuit and restore all closing sequence relays to their normal position.

b. Motor-charged and spring-operated mechanisms must meet requirements of Section 34 21 19.13 - Traction Power Medium-Voltage AC Circuit Breaker Switchgear.

2. Mechanism must be non-pumping.

3. Design must ensure positive opening of the moving contacts and circuit interruption when the tripping impulse is received at the fully closed or any partially open position.

4. Provide control with a shunt trip device with the necessary auxiliary control equipment.

H. Request to close any DC feeder breaker must be governed by the load measure reclose system. Provide sufficient logic to ensure any response to a remote closure request will

not result in an unsafe condition or cause damage to the substations or any of its components.

I. Make provisions for moving each breaker to a "connected", "disconnected/test" and "removed" position with positive stops in each position:

1. In the "connected" position, both the primary disconnecting devices (bus connections) and the secondary disconnecting devices (control cable) must be in full contact and the breaker must be in position for normal operation.

2. In the "disconnected/test" position, the primary disconnecting devices must be open and separated by a safe distance and the secondary disconnecting devices must be in full contact.

3. In the "removed" position both the primary and secondary disconnecting devices must be open and separated by a safe distance.

4. In the "disconnected/test" and "connected" positions, provide each circuit breaker with mechanical means for manually tripping the circuit breaker. This function must be available with the compartment door closed.

5. Provide two limit switches, one for “connected” position and one for “disconnected/test” position, to indicate the position of the breaker.

J. Interlocks:

1. Provide mechanical interlocks to prevent moving the circuit breaker in or out of the "connected" position when the circuit breaker main contacts are in the closed position.

2. Provide mechanical interlocks for each breaker compartment and circuit breaker combination to prevent closing the circuit breaker manually unless the breaker is in the "test" or "disconnected" position.

3. Provide electrical interlock to prevent closing circuit breaker electrically, unless the circuit breaker is in the fully "connected" position with the primary disconnecting devices in full contact, or in the "test" position.

K. Provide a mechanical indicator to show the location of the circuit breaker in "connected," "test," or "disconnected" positions.

L. Provide red and green indicating lights on each breaker unit for electrical closing and opening of the breaker while in the "test" or "connected" positions:

1. Red Light Illuminated: Breaker closed.

2. Green Light Illuminated: Breaker open.

3. Provide long life, high brightness and high visibility, LED array lights.

M. Breaker control switch: Heavy duty, switchboard type, pistol grip control, rated for the load.

N. Bypass Load Measuring:

1. Provide control on DC multifunction protective relay that allows an authorized operator to bypass load measure system when closing breaker.

2. Feature must be capable of being enabled or disabled.

O. Provide a mechanical indicator, visible when the door is closed, to show when the circuit breaker is in the "open" and "closed" condition.

P. Provide additional terminations for devices that have electrical opening or closing functions, within their respective control relay enclosures, for connection to the SCADA control system. Refer to Section 34 21 16.23 – TES Substation Local Centralized Monitoring System (LCMS) and Intelligent Electronic Devices (IED).

Q. Provide a local/remote switch to select local or remote control:

1. Switch: Heavy-duty selector switch rated for the load.

2. Provide a white LED mounted above the switch to illuminate when switch is in local position.

R. Provide a minimum of four electrically separate sets of reversible auxiliary contacts, in addition to those required for the circuit breaker control circuit:

1. Auxiliary contacts must be operated by the breaker mechanism in both the "connected" and "test" position.

2. Spare auxiliary contacts must be wired to the outgoing terminal blocks.

S. Provide four-digit, non-resettable, register-type mechanical operations counter on each circuit breaker to record tripping operations.

T. Circuit Interruption Arc Chutes:

1. Metal plate or magnetic coil type.

2. Suitable for bidirectional current flow.

3. Designed for positive interruption of currents from 0 A to circuit breaker maximum rating.

4. Provide with an air puffer device or magnetic blowout to extinguish low current arcs.

U. Provide means to permit padlocking the DC breaker while open and in the connected position, and while in the disconnected/test position to prevent inadvertent closure without having to withdraw the breaker element.

V. Provide circuit breakers with approved wheels to remove element from cubicle. Provide a fifth wheel or similar arrangement to assist in moving breaker element within substations. Wheels must not damage epoxy floor coating.

W. Interchangeability:

1. Removable elements of the same type and rating must be completely physically and electrically interchangeable.

2. Removable elements not of the same type of rating must not be physically interchangeable.

2.06 BUS AND BUS CONNECTIONS

A. Main horizontal DC switchgear bus must be an extension of the rectifier bus, run the length of the DC switchgear. Tap to serve each circuit breaker.

B. Bus: Electrical grade copper with high electrical conductivity:

1. DC Main Bus: Rated 6000 A.

2. Feeder Bus: Rated 4000 A.

C. Bolted bus connections, including bus taps, circuit breaker connections, cable connections, and connections of devices such as transducers and shunts, must be silver- plated copper and joined with a minimum of two bolts and Belleville washers per joint.

D. Each joint must have conductivity at least equal to that of the bus bar and each joint must be so clamped that no loss of conductivity will occur during the life of the switchgear.

E. Insulate main bus and feeder bus from each other with electrical insulating laminate barrier or other approved means.

F. Bus and bus connections must be of adequate strength to withstand thermal and mechanical stresses resulting from the maximum available short-circuit current or the rms interrupting rating of the circuit breakers, whichever is greater, without damage or permanent distortion.

G. Mount bus bars on barrier-type insulation or post-type insulators of sufficient strength and braced to withstand, without damage or permanent distortion, all stresses produced by the maximum available short-circuit currents.

H. All connections to the bus must be bolted. All bolted connections to be properly torqued and accordingly marked after installation. Bolts must be silicon bronze of sufficient number and size for application. All connections must be accessible for inspection and torque checking without removing cubicle from switchgear lineup.

2.07 TPSS DC CABLE CONNECTIONS

A. Provide ample space for pulling and terminating the feeder cables entering or leaving the switchgear without requiring a less-than-specified cable bending radius. Feeder cable properties are described elsewhere in the Contract Documents.

B. Cable compartment must permit cable entrance from top or bottom.

C. Provisions must be made to accommodate the number and size of DC positive cables as indicated with additional four spares in each feeder breaker section.

D. Provide for the termination to accommodate the number and size of DC negative return cables as indicated with additional four spares on load side of the negative disconnect switch.

2.08 PROTECTIVE DEVICES

A. General Requirements:

1. Protective relays provided in DC switchgear must be Intelligent Electronic Devices (IED) equipped with communication function which must communicate with substation Localized Central Monitoring System (LCMS) and SCADA, and must be similar in function and appearance to those provided for Sound Transit South Link.

2. Control, measurement and fault recording function must be built into protective relays installed in DC switchgear.

3. Refer to Section 34 21 16.23 - TES Substation Local Centralized Monitoring System and Intelligent Electronic Devices, for detailed hardware and software

requirements of IEDs. Basic functions and indications must be via LCD screens located on the IEDs for each DC main and feeder circuit breaker.

4. Provide wire, and connect protective relays and devices as indicated on the Contract Drawings.

5. Provide additional components such as auxiliary relays, isolating diodes, and similar devices not shown in the Contract Drawings, but required for a complete installation.

6. Avoid wiring congestion.

7. Arrangement and Appearance:

   a. Arrange devices such as auxiliary relays, indicating lights and test plugs to be conveniently accessible and easily visible.

   b. The grouping must be modular and place related functions in proximity.

   c. Mount devices plumb and square with the lines of the panels and mount as recommended by the manufacturer and approved by Resident Engineer.

   d. Auxiliary devices must match the general appearance as far as possible with frames of a compatible approved color and finish.

   e. Devices of the same general type must be manufactured by the same company and must be similarly arranged and mounted.

B. Refer to substation one-line diagram in the Contract Drawings for arrangement of protective relays and devices.

C. Additional protective functions/devices recommended by Contractor or equipment manufacturers may be installed with Sound Transit approval.

D. At a minimum, provide the protective functions/devices described below, as shown on the substation one-line diagram in the Contract Drawings.

E. Overcurrent. As a minimum, the following overcurrent protection functions must be provided:

1. Instantaneous Overcurrent Trip:

   a. Trip Threshold (inst): 0.3 to 9 PU.

   b. Trip Delay (Inst Del): 0 to 250 milliseconds.

2. Low Level Fault Trip:

   a. Trip Threshold (ILLF): 0.05 to 5 PU.

   b. Trip Delay (LLFDel): 0.5 to 99 minutes.

3. Timed Overcurrent Trip:

   a. Trip Threshold (Itmd): 0.2 to 2.5 PU.

   b. Time Delay (TmdDel): 0.1 to 150 sec.

c. Provide timed overcurrent trip function with inverse time characteristic that can be graphed with the set current, Itmd, as the y-axis, and the time delay, TmdDel, as the x-axis.

d. Tripping must be initiated when the load current exceeds the set current during the period of time t such that (t / TmdDel) and (Iload / Itmd) correspond to a point on the curve.

4. Rate of Rise Trip:

a. Current Trip Limit (di/dt): 1 to 50 PU/sec.

b. Current Rise Limit (I): 0.1 to 2 PU.

c. Delay Time (Delay): 20 to 400 milliseconds.

d. Rate of rise trip must be initiated if all of the following conditions are met:

1) Current di/dt exceeds the trip limit, di/dt.

2) di/dt stays above the trip limit during the delay time, Delay.

3) During the delay time current exceeds the current rise limit.

5. Reverse overcurrent protection: All overcurrent protection functions must operate for reverse currents.

F. Load Measure and Reclosure:

1. Provide each DC feeder cubicle with a set of automatic reclosing functions and equipment, including the following:

a. Load measuring function (Device 82).

b. Adjustable time delay reclosing function (Device 83).

c. Load measuring resistors mounted on the top of the circuit breaker cubicle;

d. Associated accessories.

2. Initiate the load measuring and automatic reclosing cycle when either the DC circuit breaker receives a "close" command (from the local or remote control), or when the circuit breaker is tripped automatically and attempts to reclose.

3. A "lockout" status of the DC lockout relay must disable the load measuring and automatic reclosing cycle.

4. Precede initiation of the load measuring cycle by an adjustable time delay to permit the faulted line section to become fully deenergized.

5. At the commencement of the load measurement cycle, a voltage sensor must determine whether there is no voltage on the section.

6. If the voltage measuring circuit detects potential on the section, it must reclose the associated circuit breaker immediately, providing that this potential is greater than a preset value.

a. The pickup setting must be adjustable over the range of 1200 to 1500 Vdc.

b. Initially the pickup voltage must be set to 1400 Vdc.

7. If the voltage measuring circuit detects no potential on the section, the load measuring function must make repeated load measurements at suitable adjustable time intervals.

8. If a load measurement determines that no fault is present, initiate automatic reclosing of the circuit breaker.

9. A successful reclosure with no automatic trip within 5 seconds must complete the measurement cycle and reset the devices to their initial state.

10. Make provision for selection of up to six attempts to complete a successful load measurement and automatic reclosing cycle at 15 second intervals, within a 3 minute period. Initial setting of reclosure device must be set at 3 reclosure attempts.

11. If no successful reclosure takes place in the 3 minute period, the automatic reclosing and load measuring system must time out the feeder breaker from closing.

12. Provide each automatic reclosing and load measuring function with test facilities that must check the functioning of all devices.

    a. Initiate test cycle with a local "test" push-button which must be functional only when the circuit breaker removable element is in the "test" position.

    b. Circuit breaker must not close during an automatic reclosing and load measuring test when the breaker is in the "connected" position.

13. Monitor condition of reclosure device with indicating LEDs.

G. High Resistance Frame Fault:

1. Connect a high-resistance frame fault relay (Device 64G and H) between the structure and the ground mat. Relay must be rated for 1500V.

2. Insulate DC switchgear enclosure from ground. Single-point ground enclosure through a separate high resistance ground relay device 64G & H by means of a 2.4kV insulated 4/0 AWG copper conductor connected directly to the substation ground mat:

    a. The 64G & H relay must be the only ground path to the enclosure.

    b. Provide adjustable settings for annunciation/alarm and trip functions.

    c. The occurrence of any “Grounded Structure“ or “Hot/Alive Structure” must be detected. Trip function must trip and lock out the substation and “Hot/Alive Structure” must initiate the Transfer trip to adjacent TPSS

3. DC feeder breakers must reclose after the main DC circuit breaker is opened, except when a frame fault occurs, the DC breakers lock out.

4. Main DC circuit breaker must operate to isolate the Transformer-Rectifier Unit in case of an internal fault while allowing continuity of the overhead distribution system.

H. Incomplete Sequence (Device 48):

1. This function must detect the failure of a DC circuit breaker to clear a fault within a predetermined time.

2. This function must actuate the ac lock-out relay (Device 86) when actuated.

I. Transfer Trip: For transfer trip initiated by DC breakers or initiated by ETS/SSS, see Section 34 21 16.23 - TES Substation LCMS and IED.

J. Reverse Current:

1. Provide reverse current protection (Device 32A) for the main DC breaker.

2. The protection must detect current flow from the distribution bus into the rectifier unit and trip and lock out the main DC and ac circuit breakers.

3. The trip level must be initially set to 5 percent of the rated current or as approved by Resident Engineer.

K. 1500 V Shorted to 125 Vdc: Provide relay to detect 1500 Vdc shorted to 125 Vdc (Device 59) and annunciate the alarm to LCMS and SCADA and trip and lock out the main DC and ac circuit breakers.

2.09 INSTRUMENTS AND METERS

A. Accuracy of indicating instruments must be within 1 percent of full-scale reading.

B. Main DC switchgear must be provided with ammeter and voltmeter which must be switchboard analog type:

1. Cases: Dustproof, with an approved color and finish and covered with a non-reflecting glass window.

2. Ammeter Scale: 0-6000A except as indicated.

3. Voltmeter Scale: 0-2000 V.

C. DC feeder breakers must be provided with ammeter and voltmeter which must be switchboard analog type:

1. Cases: Dustproof, with an approved color and finish and covered with a non-reflecting glass window.

D. Ammeter Scale: 0 to + 4000 0 to - 4000A, 0 being center scale except as indicated:

1. Voltmeter Scale: 0-2000 V.

E. Instruments for measuring DC values must receive their inputs from isolation converters that must be provided within the bus compartment of the switchgear:

1. Provide auxiliary devices required for operation of the converters.

2. Provide suitable isolation and insulation in order to ensure safe operation in contact with personnel.

2.10 MIMIC BUS

A. Provide mimic bus across the entire front of the switchgear complying with mimic bus requirements in Section 34 21 19.13, Traction Power Medium-Voltage AC Circuit Breaker Switchgear.

2.11 SOURCE QUALITY CONTROL

A. Factory Design Tests:

1. Perform factory design test in accordance with Section 34 21 16.11 - Traction Power and Substation Testing.

B. Factory Production Tests:

1. Perform factory production test in accordance with Section 34 21 16.11 - Traction Power and Substation Testing.

PART 3 - EXECUTION

3.01 INSTALLATION

A. The switchgear must be installed in accordance with Section 34 21 16.25 - Traction Power Substation Installation.

B. Completely insulate DC switchgear enclosure and rectifier from ground and from the traction power transformer and the ac switchgear:

1. Insulate and isolate DC switchgear and rectifier from the floor using an epoxy floor covering in accordance with Section 09 67 25 - Dielectric Epoxy Flooring.

2. Insulate and isolate DC switchgear and rectifier from the transformer using electrical laminate in accordance with Section 34 21 16.25 - Traction Power Substation Installation.

3.02 FIELD QUALITY CONTROL

A. Field Tests and Inspections: Perform field acceptance test in accordance with Section 34 21 16.11 - Traction Power and Substation Testing.

3.03 PROTECTIVE DEVICE COORDINATION

A. Establish final setting of relaying systems and protective devices during the systems and acceptance tests specified in Section 34 21 16.11 - Traction Power and Substation Testing.

END OF SECTION

SECTION 34 21 27

TRACTION POWER METAL FABRICATION AND FINISHES

PART 1 - GENERAL

1.01 SUMMARY

A. Section Includes:

1. Requirement for the following:

a. Products fabricated by the Contractor or custom manufactured by its suppliers.

b. Galvanizing.

c. Welding.

d. Shop-applied powder coat.

e. Shop-applied paint coating system.

1.02 REFERENCES

A. This Section incorporates by reference the latest revisions of the following documents:

1. American Society for Nondestructive Testing (ASNT):

a. ASNT CP-105 - Standard Topical Outlines for Qualification of Nondestructive Testing Personnel.

b. ASNT-TC-1A - Personnel Qualification and Certification in Nondestructive Testing.

2. American Welding Society (AWS):

a. AWS A5 Series - Filler Metal Specifications.

b. AWS B1.10M/B1.10 - Guide for the Nondestructive Examination of Welds.

c. AWS D1.1/D1.1M - Structural Welding Code – Steel.

d. AWS D1.3/D1.3M - Structural Welding Code – Sheet Steel.

e. AWS QC1 - Standard for AWS Certification of Welding Inspectors.

f. AWS QC7 - Standard for AWS Certified Welders.

3. American Society for Testing and Materials International (ASTM):

a. ASTM A53/A53M - Standard Specification for Pipe, Steel, Black and Hot Dipped, Zinc-Coated, Welded and Seamless.

b. ASTM A123/A123M - Standard Specification for Zinc (Hot-Dip Galvanized) Coatings on Iron and Steel Products.

c. ASTM A143/143M - Standard Practice for Safeguarding against Embrittlement of Hot-Dip Galvanized Structural Steel Products and Procedure for Detecting Embrittlement.

d. ASTM A153/A153M - Standard Specification for Zinc Coating (Hot-Dip) on Iron and Steel Hardware.

e. ASTM A384/A384M - Standard Practice for Safeguarding Against Warpage and Distortion During Hot Dip Galvanizing of Steel Assemblies.

f. ASTM A385/A385M - Standard Practice for Providing High-Quality Zinc Coatings (Hot Dip).

g. ASTM A653/A653M - Standard Specification for Steel Sheet, Zinc- Coated (Galvanized) or Zinc-Iron Alloy-Coated (Galvannealed) by the Hot-Dip Process.

h. ASTM A780/A780M - Standard Practice for Repair of Damaged and Uncoated Areas of Hot-Dip Galvanized Coatings.

i. ASTM B117 - Standard Practice for Operating Salt Spray (Fog) Apparatus.

j. ASTM D522/D522M - Standard Test Methods for Mandrel Bend Test of Attached Organic Coatings.

k. ASTM D523 - Standard Test Method for Specular Gloss.

l. ASTM D610 - Test Method for Evaluating Degree of Rusting on Painted Steel Surfaces.

m. ASTM D714 - Test Method for Evaluating Degree of Blistering of Paints.

n. ASTM D968 - Standard Test Methods for Abrasion Resistance of Organic Coatings by Falling Abrasive.

o. ASTM D1308 - Standard Test Method for Effect of Household Chemicals on Clear and Pigmented Organic Finishes.

p. ASTM D2247 - Standard Practice for Testing Water Resistance of Coatings in 100% Relative Humidity.

q. ASTM D2248 - Standard Practice for Detergent Resistance of Organic Finishes.

r. ASTM D2485 - Standard Test Methods for Evaluating Coatings For High Temperature Service.

s. ASTM D2794 - Standard Test Method for Resistance of Organic Coatings to the Effects of Rapid Deformation (Impact).

t. ASTM D317 - Standard Test Method for Chipping Resistance of Coatings.

u. ASTM D3359 - Standard Test Methods for Measuring Adhesion by Tape Test.

v. ASTM D3363 - Standard Test Method for Film Hardness by Pencil Test.

w. ASTM D3451 - Standard Guide for Testing Coating Powders and Powder Coatings.

x. ASTM D4060 - Standard Test Method for Abrasion Resistance of Organic Coatings by the Taber Abraser.

y. ASTM D4541 - Standard Test Method for Pull-Off Strength of Coatings Using Portable Adhesion Testers.

z. ASTM D4585 - Standard Practice for Testing Water Resistance of Coatings Using Controlled Condensation.

aa. ASTM D4798/D4798M - Standard Practice for Accelerated Weathering Test Conditions and Procedures for Bituminous Materials (Xenon-Arc Method).

bb. ASTM D5894 - Standard Practice for Cyclic Salt Fog/UV Exposure of Painted Metal, (Alternating Exposures in a Fog/Dry Cabinet and a UV/Condensation Cabinet).

cc. ASTM D6132 - Standard Test Method for Nondestructive Measurement of Dry Film Thickness of Applied Organic Coatings Using an Ultrasonic Coating Thickness Gage.

dd. ASTM D6695 - Standard Practice for Xenon-Arc Exposures of Paint and Related Coatings.

ee. ASTM D7091 - Standard Practice for Nondestructive Measurement of Dry Film Thickness of Nonmagnetic Coatings Applied to Ferrous Metals and Nonmagnetic, Nonconductive Coatings Applied to Non-Ferrous Metals.

ff. ASTM D7803 - Standard Practice for Preparation of Zinc (Hot-Dip Galvanized) Coated Iron and Steel Product and Hardware Surfaces for Powder Coating.

gg. ASTM E94 - Standard Guide for Radiographic Examination.

hh. ASTM E164 - Standard Practice for Contact Ultrasonic Testing of Weldments.

ii. ASTM E165/E165M - Standard Practice for Liquid Penetrant Examination for General Industry.

jj. ASTM E709 - Standard Guide for Magnetic Particle Testing.

kk. ASTM E1032 - Standard Test Method for Radiographic Examination of Weldments.

ll. ASTM G151 - Standard Practice for Exposing Nonmetallic Materials in Accelerated Test Devices that Use Laboratory Light Sources.

mm. ASTM G155 - Standard Practice for Operating Xenon Arc Light Apparatus for Exposure of Non-Metallic Materials.

4. Society for Protective Coatings (SSPC):

a. SSPC-PA 1 - Shop, Field, and Maintenance Painting of Steel.

b. SSPC-PA 2 - Procedure for Determining Conformance to Dry Coating Thickness Requirements.

c. SSPC-SP6 - Commercial Blast Cleaning.

d. SSPC-SP8 – Pickling.

e. SSPC-Paint 36 - Two-Component Weatherable Aliphatic Polyurethane Topcoat, Performance Based.

f. SSPC-Paint 42 Epoxy Polyamide/Polyamidoamine Primer, Performance Based.

B. Definitions:

1. Galvanneal: Zinc-iron alloy coating created on sheet steel by a continuous hot-dipping process followed by heat treatment in an annealing furnace.

2. Hot-dip galvanizing: Dipping steel members and assemblies into molten zinc for long- term corrosion protection. Resultant zinc coating fuses permanently with base steel material.

1.03 SUBMITTALS

A. Submit:

1. Submit each item listed below as a complete package.

2. Shop-Applied Galvanizing Certification:

a. If more than one galvanizer is used, include the items listed below for each galvanizer.

b. Certification:

1) Certification of membership in American Galvanizers Association, signed by the galvanizer.

2) Notarized certificates of compliance with ASTM preparation and galvanizing requirements specified in this Section.

3) Certification that galvanizing is in conformance with this Section, signed by the galvanizer.

3. Welding Design Package:

a. Certification:

1) Furnish notarized certificates of compliance with ASTM requirements specified in this specification.

b. Welder Qualifications:

1) Submit record of AWS qualification for each welder to be employed in the Work.

2) Submit certified copies of qualification test records for each welder, welding operator and tack welder to be employed in the Work.

3) Submit welders' identification marks (I.D.) for each welder along with qualifications.

c. Welding Procedures:

1) Before welding, submit the procedure that will be used for qualifying welding procedures.

2) For procedures other than those prequalified in accordance with AWS D1.1/D1.1M, submit a copy of procedure qualification test records in accordance with the qualification requirements of AWS D1.1/D1.1M.

3) If field welding is permitted, submit descriptive data for field welding equipment.

4. Shop-Applied Powder Coat Design Package:

a. Qualifications (for each applicator):

1) Evidence that powder coat applicator has experience with the substrate.

2) Evidence that the applicator is an ASTM approved and authorized applicator of the coating formulator's products.

3) Applicator's quality control procedures.

4) Certification that the applicator has been authorized to provide the coating formulator's warranty.

b. Product Data:

1) Descriptive and technical data sheets describing products proposed for use.

2) Documentation of application process, including preparation before coating.

c. Powder Coat Samples:

1) Submit for each color and substrate one 12-inch square of the substrate to which powder coat will be applied with the primer, top coat, and graffiti coat applied.

2) Stagger each coat such that the Resident Engineer can view each.

d. Repair: Manufacturer required repair procedures and materials procedures for field touch up of marred or damaged coatings using air-drying spray materials in matching colors.

e. Maintenance Information: Manufacturer's required maintenance materials and procedures.

5. Shop-Applied Paint Coating System Design Package:

a. Qualifications:

1) Evidence that paint coating applicator has experience with the proposed paint coating system.

2) Certification that the applicator has been authorized to provide the coating formulator's warranty.

b. Product Data:

1) Performance characteristics: For each substrate used, the tested performance characteristics of the coating.

2) Documentation of application process.

c. Paint Coating System Samples:

1) Submit for each color and substrate one suitably sized sample of the substrate to which paint coating system will be applied with the primer, top coat, and graffiti coat applied.

2) Stagger each coat such that the Resident Engineer can view each.

6. Shop Galvanizing Source Inspection and Test Records:

a. Submit records for each specified inspection and test immediately after inspections and tests are completed.

b. If shop galvanizing repairs are required, submit detailed records, including photos, documenting areas repaired, procedures used, and inspections and tests performed after completion of the repair.

7. Shop Welding Inspection and Test Records:

a. Submit records for each specified inspection and test immediately after inspections and tests are completed.

b. If shop welding repairs are required, submit detailed records, including photos, documenting welds repaired, procedures used, and inspections and tests performed after completion of the repair.

8. Shop-Applied Powder Coat Certification and Test Records:

a. Certification that the applied powder coat is in conformance with this Section and the EOR approved Design Package, signed by the applicator.

b. Test records showing compliance with testing and performance requirements specified in this Section.

1) Test records may be existing, if substrate and product are identical to that used for this project.

2) If no existing test records are available, perform each specified test and submit results.

9. Shop-Applied Paint Coating System Certification and Test Records:

a. Certification that the applied paint coating system is in conformance with this Section and the EOR approved Design Package, signed by the applicator.

b. Test records showing compliance with testing and performance requirements specified in this Section.

1) Test records may be existing, if substrate and product are identical to that used for this project.

2) If no existing test records are available, perform each specified test and submit results.

10. Galvanizing Field Repair Procedure:

a. If repair is necessary, submit a detailed step-by-step repair procedure before performing repairs.

11. Field Welding Test Report:

a. If field welding is performed, submit as follows:

1) Records for each specified inspection and test immediately after inspections and tests are completed.

2) If field welding repairs are required, submit detailed records, including photos, documenting welds repaired, procedures used, and inspections and tests performed after completion of the repair.

12. Shop Applied Coatings Field Repair Procedure:

a. If repair is necessary to shop-applied powder coat or shop-applied paint coating system, submit the following before performing repairs:

1) Detailed, step-by-step repair procedure, including preparation, application, and product data for repair materials.

1.04 SPECIFIED REPAIR SAMPLE AFTER SPECIFIED SALT SPRAY TESTING HAS BEEN COMPLETED.QUALITY ASSURANCE

A. Single Source for Galvanized and Finished Metal Fabrications:

1. Use products of one manufacturer on each specific item to ensure exact color match and finish appearance.

B. Galvanizing:

1. Galvanizing firm must be member of American Galvanizers Association Inc. (AGA).

2. Inspection and Tests:

a. Inspections, test and samples must conform with ASTM Specifications and Standards.

b. Inspection rights and privileges, procedures and acceptance or rejection of galvanized steel materials must conform with ASTM A123/A123M.

C. Welding:

1. Welder Qualifications:

a. Welding must be done by AWS certified, qualified welders who make only those welds for which they have been qualified in accordance with AWS, or other approved qualifying procedures.

b. Welders, Welding operators, and tack welders must be certified in accordance with AWS QC7 and AWS D1.1/D1.1M.

c. For sheet steel, welders must be certified in accordance with AWS QC7 and AWS D1.3/D1.3M, Qualification Section.

d. Records of welder qualification tests must be made available for review upon the Resident Engineer's request.

2. Welding Procedure Qualification:

a. Welding procedures must be prequalified or qualified in accordance with AWS D1.1/D1.1M.

b. For sheet steel, proposed welding procedures must be qualified in accordance with AWS D1.3/D1.3M. Prequalification is not applicable to sheet steel.

3. Welding Inspector Qualifications:

a. Welds to be inspected by the Contractor must be inspected and certified by an AWS Certified Welding Inspector (CWI).

b. CWI must be certified in accordance with AWS QC1.

4. Nondestructive Testing Personnel Qualifications:

a. Qualified and certified in accordance with SNT-TC-1A and ASNT CP-105.

b. Certified for NDT Level I and working under a person or persons certified for NDT Level II or Level III.

5. Welding Records:

a. Retain mill certificates and certified copy of reports for analyses and tests required by referenced ASTM and AWS specifications.

b. Retain radiographs upon completion of fabrication.

c. Retain certifications that magnetic particle and dye-penetrant inspections have been satisfactorily completed.

D. Shop-Applied Powder Coating:

1. Applicator Qualifications:

a. Engage an experienced coating applicator with experience in properly applying the coating on the specified substrate.

b. Applicator must have quality control procedures firmly established in its shop.

c. Resident Engineer may, at his option, visit the applicator's facility to confirm adherence to quality control procedures.

1.05 DELIVERY, STORAGE, AND HANDLING

A. Deliver, handle, and store metal fabrications in a manner that prevents damage to the item, its galvanizing, and its finish.

1.06 WARRANTY

A. Scope: Warranty applies to the following:

1. Coating applied to shop welds.

2. Shop-applied powder coat.

3. Shop-applied paint coating system.

B. Warranty Period: 10 years.

C. Furnish written warranty stating that coating will not blister, peel, crack, chalk, change color or have other forms of degradation during warranty period.

D. Coating failure:

1. In the event that coating failure occurs within warranty period, replace item indicating coating failure, including full cost of labor and materials for such replacement.

2. Replacement items must be new and finished with same type coating meeting requirements of this Section.

3. Replacement items must match adjacent members.

E. The Resident Engineer may permit field repairs in lieu of replacement, provided coating failure is minor in scope and field repair material and method employed match its adjacent member. Repairs must be compatible with original surface.

PART 2 - PRODUCTS

2.01 MATERIALS

A. Shop-Applied Galvanizing

1. General:

a. Wherever materials are called out as “hot-dip galvanized” or “galvanized,” provide a zinc coating after fabrication in accordance with ASTM A123/A123M.

b. Hardware items such as bolts or other threaded fasteners must be hot-dip galvanized after fabrication in accordance with A153/A153M.

c. Specified materials or products that are not readily available in the specified hot- dip finish, must be custom hot dipped after manufacture by an independent galvanizer.

2. Selection, Design, and Fabrication Before Galvanizing:

a. Verify with supplier or fabricator that material is chemically suitable for galvanizing.

b. Warpage: Design assemblies as required in ASTM A384/A384M to limit warpage and distortion during hot-dip galvanizing.

1) Notify the Resident Engineer of potential warpage problems that require modification in design before proceeding with steel fabrications.

2) Costs for alternative designs must be performed at no additional cost to Owner.

c. Design and fabricate assemblies requiring shop fabrication using methods required in ASTM A385/A385M to obtain high quality hot-dip galvanized coating.

d. Embrittlement: Select proper steel, design assemblies, and thermally treat before galvanizing as required in ASTM A143/A143M to withstand normal galvanizing operations without embrittlement.

e. Galvanizer Coordination Drawings: Furnish shop drawings to galvanizer of non- standard fabrications, tubular fabrications, and fabrications with materials of different thicknesses.

f. Inspect iron and steel hardware before galvanizing and verify suitability for galvanizing. Replace items that are not suitable for galvanizing.

g. When the item to be galvanized incorporates threaded assemblies, make provisions in thread size to accommodate galvanizing and galvanize disassembled.

h. Weld, drill, and assemble galvanized members before galvanizing.

3. Preparation:

a. Remove welding slag, splatter, and burrs.

b. Clean surfaces in conformance with SSPC SP6, Commercial Blast Cleaning.

c. Pickle surfaces in conformance with SSPC SP8, Pickling.

d. Safeguard against increasing the likelihood of steel embrittlement during pickling in accordance with ASTM A143/A143M.

e. Mask galvanized members that are to be field or shop welded after galvanizing to a distance of 1 inch from weld line before galvanizing.

4. Hot-Dip Galvanizing:

a. Select a galvanizer with galvanizing kettle large enough to accommodate the largest member or assembly requiring hot-dip galvanizing. Progressive dipping must not be used.

b. Hot-dip galvanize structural steel and metal fabrications as indicated in conformance with ASTM A123/A123M.

c. Hot-dip galvanize bolts or other threaded fasteners after fabrication in accordance with A153/A153M.

d. Thickness of zinc coating: Conform to requirements of ASTM A123/A123M or ASTM A153/A153M, whichever is applicable.

e. Finish, uniformity, and adherence of coating: Conform to requirements of ASTM A123/A123M or ASTM A153/A153M, whichever is applicable.

f. Galvanized members on which powder coat or paint will be applied must not be quenched by the galvanizer.

g. Galvanizer's Stamp: Galvanized materials must be marked with the galvanizer's stamp.

5. Mechanical Galvanizing must not be used.

B. WELDING

1. Weldability of Steel: For structural steel requiring impact test qualification and for corrosion resistant structural steel, establish weldability of steel and procedures for welding it by qualification in accordance with AWS D1.1/D1.1M, to match the notch toughness and weathering characteristics of the base metal.

2. Rod/Electrodes:

a. Electrodes for structural plate, shapes, pipe, tubes, and bars must conform to AWS A5 Series Standards and must be coated rods or wire of size and classification number as required by their manufacturers for the conditions of actual use.

b. Electrodes for sheet steel must conform to AWS A5 Series Standards and must be coated rods or wire of size and classification number, as required by their manufacturers for the conditions of actual use.

3. Stud Shear Connectors: Only products of manufacturers qualified in accordance with AWS D1.1/D1.1M will be accepted for this Work.

4. Shop Welding:

a. Perform shop welding as indicated in accordance with AWS D1.1/D1.1M, and AWS D1.3/D1.3M, as applicable to the Work.

b. Welders must mark adjacent to completed welds their welder I.D., using metal stamp, metal engraving, keel, paint stick, or other appropriate marking material.

5. Field Welding:

a. Field welding must not be performed without approval of the Resident Engineer.

b. If approved by the Resident Engineer, field welding must comply with applicable AWS standards, as proposed by the Contractor and approved by the Resident Engineer.

6. Coating Shop Welds:

a. Coat shop welds made after hot-dip galvanizing and areas masked to permit welding as follows:

1) Provide an inorganic ethyl silicate primer containing 85 percent zinc by weight in the dry film.

2) Prepare surface in strict compliance with manufacturer's required procedures.

3) Apply a single coat of 75 microns dry film thickness in strict accordance with manufacturer's application instructions.

4) Top coat is required only if surrounding surface is painted, or if necessary to match color of surrounding area.

5) Where top coating is required, provide a compatible product and apply according to manufacturer's instructions to achieve good cohesion and prevent pinholing.

b. Color: Match color of surrounding area.

C. SHOP-APPLIED POWDER COAT

1. Powder Coat System:

a. Powder Coat: Polyester triglycidyl isocyanurate (TGIC), thermoset color finish system based on dry, powdered resins.

b. Primer: Compatible with powder top coat, as confirmed by powder coat manufacturer.

c. Top Coat: Compatible with powder primer, as confirmed by powder coat manufacturer.

d. Anti-Graffiti Coating:

1) Permanent protection system designed to withstand numerous clean- ups.

2) Suitable for cleaner available in the United States.

3) Compatible with powder coat.

e. Dry Film Thickness: As required by coating manufacturer; minimum thickness of primer and top coat 4 mils.

f. Powder coat system must include primer, top coat, and graffiti coat, and meet the following requirements:

1) As listed below in the Article titled "Source Quality Control" in the Paragraph titled "Shop-Applied Powder Coating Testing," when applied on the specified substrate, e.g. hot dip galvanized steel or galvannealed sheet steel.

2) Warranty requirements specified above.

2. Perform mechanical processing such as sawing, drilling, milling, cutting, and bending before applying shop applied coatings.

3. Preparation before coating:

a. Hot-dip galvanized per ASTM A123/A123M: Prepare surface in accordance with ASTM D7803.

b. Galvannealed per ASTM A653/A653M: Prepare surface in accordance with ASTM D7803.

c. Cleaning:

1) Clean surfaces to be coated as follows:

a) Remove all dust, dirt, and other surface debris by vacuuming, wiping dry with clean clothes or compressed air.

b) Rinse scrubbed surfaces with clean water until foreign matter is flushed from surface.

c) Allow surfaces to drain completely and allow to thoroughly dry.

d) Use water blasting only when necessary for extreme cases of contamination by oily residue and where hand washing is impractical.

e) If the above procedures do not clean the substrate surfaces, clean the surfaces with high pressure water washing.

d. Pretreatment:

1) Wash parts in a four stage iron-phosphate washer for steel or zinc-phosphate washer for galvanized steel, or in accordance with coating manufacturer's requirement.

2) Dry parts before application of power coating.

3) Treatment of the substrate: ASTM D3451.

4. Application:

a. Edges: Treat and finish as required to ensure specified minimum dry film coating thickness is achieved. Precoating of edges may be required.

b. Apply primer in accordance with manufacturer's written application instructions.

c. Apply top coat in accordance with manufacturer's written application instructions.

d. Allow surfaces to cure for time period in accordance with manufacturer's cure curves.

e. Inspect parts after cooling.

5. Color:

a. TPSS Enclosure Exterior: Color ANSI 70 Gray, coordinate with the Resident Engineer for confirmation.

b. TPSS Enclosure Interior: RAL 9010, Pure White or IFS Sky White.

c. Electrical Equipment: Munsell Color System 8.3G 6.1/0.5 (ANSI 61 grey).

2.02 SHOP-APPLIED PAINT COATING SYSTEM

A. General Requirements:

1. Coatings must be certified VOC compliant and conform to applicable regulations and EPA standards.

2. Material Compatibility:

a. Provide primers, finish coat and anti-graffiti materials and related materials that are compatible with one another and the steel substrate.

b. Furnish documentation from manufacturer demonstrating compatibility in both application and service based on testing and field experience.

3. Material Quality:

a. Provide highest grade of coatings as regularly manufactured by acceptable coating manufacturers.

b. Materials not displaying manufacturer's identification as a best-grade product will not be acceptable.

4. Coating system must meet the requirements listed below in the Article titled “Source Quality Control” in the Paragraph titled “Shop-Applied Paint Coating System Testing,” when applied on the specified substrate, e.g. hot dip galvanized steel or galvannealed sheet steel.

B. Primer: Polyamide epoxy, 4-6 mils dry film thickness.

C. Top Coat:

1. High solids, pigmented, aliphatic polyurethane, meeting requirements of SSPC Paint 36.

2. Dry film thickness: Minimum 4 mils.

3. Color: As specified, as indicated, or as directed by the Resident Engineer.

4. Gloss: Flat, semi-gloss, or gloss, as specified. Textured finishes not permitted.

D. Anti-Graffiti Coat:

1. Clear, aliphatic polyurethane non-sacrificial coating designed to resist graffiti and protect the underlying substrate.

2. From the same manufacturer and compatible with the EOR approved top coat.

E. Acceptable Manufacturers/Brands:

1. AkzoNobel/ICI Paints/Devoe High Performance Coatings.

2. Carboline.

3. PPG Protective and Marine Coatings.

4. Tnemec; or approved equal by the EOR.

F. Shop-Applied Paint Coating Application:

1. Prepare steel in accordance with paint manufacturer’s requirements.

a. Verify with paint manufacturer that proposed surface cleaner is compatible with ST approved paint coating system.

b. Apply paint as soon as possible after surface preparation.

2. Primer:

a. Shop-apply in accordance with SSPC-PA 1, SSPC-PA 2, SSPC-Paint 42, and manufacturer's instructions.

b. Verify dry film thickness in accordance with SSPC-PA 2.

3. Top coat: Shop-apply in accordance with manufacturer's instructions.

4. Graffiti coat: Shop apply two coats in accordance with manufacturer's instructions.

2.03 SOURCE QUALITY CONTROL

A. Shop Inspections and Tests by the Resident Engineer:

1. Galvanizing, shop applied coatings, and welds are subject to inspections and tests by the Resident Engineer.

2. If testing is performed by the Resident Engineer, the test results will be available to the Contractor.

B. Galvanizing:

1. Shop Galvanizing Inspection and Test:

a. Inspect and test galvanizing at galvanizer's facility for full coverage and adhesion to steel in accordance with ASTM A123/A123M or ASTM A153/A153M, whichever is applicable.

b. Inspection and test must include the following:

1) Visual examination of samples and finished products.

2) Tests to determine weight or mass of zinc coating per square foot of steel surface.

3) Tests to determine distribution and uniformity of zinc coating.

4) Tests to determine thread fittings of units, washers to bolts.

c. Test hardware or assemblies susceptible to embrittlement in accordance with ASTM A143/A143M. The Resident Engineer will make the final determination on whether embrittlement testing is required.

d. Shop Galvanizing Repair:

1) Grind rough areas to produce a uniform surface.

2) Repair steel grinding, scratches and other damage, in accordance with ASTM A780/A780M.

3) Sprayed Zinc: Clean and preheat to assure freedom from loose material, moisture, oil grease, or other foreign matter before applying zinc. Apply zinc coating by metallizing spray to clean and dry surfaces.

4) Zinc-Based Solders and Wire:

a) Clean to remove loose material and contaminates, and heat to approximately 572 degrees F.

b) Apply zinc-alloy repair compound by spreading material over heated surface in accordance with compound manufacturer's instructions.

c) Remove repair compound residues with damp cloth or by rinsing with water.

2. Dry film thickness of applied repair materials: Not less than galvanized coating thickness required by ASTM A53/A53M, A123/A123M, or A153/A153M.

C. Shop Welding Inspections and Tests by the Contractor:

1. Visual Inspection:

a. Visually examine all welds in accordance with AWS D1.1/D1.1M.

b. Quality of welds and standards of acceptance must be in accordance with AWS D1.1/D1.1M.

2. Inspection and Testing Type Requirements:

a. Nondestructive Testing: Conform to AWS B1.10M/B1.10.

b. Liquid Penetrant Inspection: Liquid dye penetrant inspection of welds must conform to ASTM E165/E165M.

c. Magnetic Particle Inspection: Magnetic particle inspection of welds must conform to ASTM E709.

d. Ultrasonic Testing: Comply with AWS D1.1/D1.1M and ASTM E164, as applicable.

e. Radiographic Testing: Comply with AWS D1.1/D1.1M, ASTM E94, and ASTM E1032, as applicable.

3. Inspect complete and partial joint penetration groove welds and fillet welds using magnetic particle inspection as follows:

a. One out of five (20 percent) of complete joint penetration groove welds of tee and corner joints.

b. One out of ten (10 percent) of partial joint penetration groove welds and fillet welds.

4. Random Testing: Randomly test 10 percent of welds by either liquid penetrant inspection or magnetic particle inspection.

5. Additional Testing: If random testing reveals possible flaws, test the welds in question, and additional welds if directed by the Resident Engineer, using ultrasonic or radiographic testing. Requirement for this additional testing must be at no additional cost to the Owner and must be at the sole discretion of the Resident Engineer.

6. Test complete joint penetration groove welds by radiographic testing as follows:

a. One out of ten (10 percent) with thickness equal to or less than 3/4 inch.

b. One out of two (50 percent) with thickness greater than 3/4 inch and equal to or less than 1.5 inches.

c. 100 percent for thickness greater than 1.5 inches.

d. Complete joint penetration groove welds not accessible for radiographic testing must be subjected to ultrasonic testing. The extent must be the same as specified for radiographic testing.

7. Repairs:

a. Repair unacceptable welds in accordance with AWS D1.1/D1.1M.

b. Reinspect or retest repaired or corrected welds as specified for the original weld.

D. Shop-Applied Powder Coat Testing:

1. Coating must meet or exceed the following testing requirements and performance criteria of ASTM D3451 and other standards indicated below.

2. Physical Properties of Powder Coatings:

a. Measurement of film thickness: ASTM D6132 or D7091.

b. Abrasion resistance: ASTM D968.

c. Adhesion: ASTM D3359, Method B, 5B.

d. Elongation (flexibility): Mandrell Bending Test, ASTM D522/D522M, equal to or greater than 3 mm.

e. Household chemical resistance: ASTM D1308.

f. Detergent resistance: ASTM D2248.

g. Chip resistance: ASTM D3170.

h. Gloss:

1) Interior: 25 to 40 percent reflective gloss.

2) Exterior: ASTM D523, 80 to 90 plus.

3) Surface: Smooth

i. Pencil hardness:

1) Interior: ASTM D3363, F minimum.

2) Exterior: ASTM D3363, 4H (minimum).

j. Impact resistance: ASTM D2794, 80 (in/lb), no appearance of cracks.

3. Accelerated Artificial Weathering: ASTM D6695, ASTM G151, ASTM G155.

4. Accelerated Environmental Exposure:

a. Salt spray:

1) Interior: ASTM B117, 250 hours, maximum undercut failure of 1.6 mm at scribed test lines; no blistering.

2) Exterior: ASTM B117, 500 hours, maximum undercut failure 1 mm; no blistering.

b. Humidity Resistance: ASTM D2247, 500 hours, maximum undercutting 1 mm; no blistering.

E. Shop-Applied Paint Coating System Testing:

1. Primer must meet or exceed the following testing requirements and performance criteria of the standards indicated below:

a. Abrasion Resistance per ASTM D4060 (CS17 Wheel, 1,000 grams load), 1 kg Load: 200 mg loss.

b. Adhesion per ASTM D4541: 1050 psi.

c. Corrosion Weathering per ASTM D5894, 13 Cycles, 4,368 Hours: Rating 10 per ASTM D714 for blistering; Rating 7 per ASTM D610 for rusting.

d. Direct Impact Resistance per ASTM D2794: 160 inch pounds.

e. Flexibility per ASTM D522/D522M, 180 degree Bend, 1 inch Mandrel: Passes.

f. Pencil Hardness per ASTM D3363: 3B.

g. Moisture Condensation Resistance per ASTM D4585, 100 degrees F, 2000 Hours: Passes, no cracking or delamination.

h. Dry Heat Resistance per ASTM D2485: 250 degrees F.

2. Top Coat must meet or exceed the following testing requirements and performance criteria of the standards indicated below:

a. Abrasion Resistance per ASTM D4060, CS17 Wheel, 1,000 Cycles 1kg Load: 87.1 mg loss.

b. Adhesion per ASTM D4541: 1050 psi.

c. Direct Impact Resistance per ASTM D2794: Greater than 28 inch pounds.

d. Indirect Impact Resistance per ASTM D2794: 12-14 inch pounds.

e. Dry Heat Resistance per ASTM D2485: 200 degrees F.

f. Salt Fog Resistance per ASTM B117 9,000 Hours: Rating 10 per ASTM D714 for blistering.

g. Flexibility per ASTM D522/D522M, 180 Degree Bend, 1/8 Inch Mandrel: Passes.

h. Pencil Hardness per ASTM D3363: 2H.

i. Moisture Condensation Resistance per ASTM D4585, 100 degrees F, 1000 Hours: No blistering or delamination.

j. Xenon Arc Test per ASTM D4798/D4798M: Pass 300 hours.

PART 3 - EXECUTION

3.01 INSTALLATION

A. Field Welding: Must be performed as specified for shop welding.

3.02 SITE QUALITY CONTROL

A. Galvanizing: After delivery of substation, inspect galvanizing and repair if damaged.

1. Repair scratches and other damage in accordance with ASTM A780/A780M.

2. If the following is performed in the field, repair in accordance with ASTM A780/A780M:

a. Cutting metal.

b. Grinding metal.

c. Welding.

3. Dry film thickness of applied repair materials: Not less than galvanized coating thickness required by ASTM A53/A53M, A123/A123M, or A153/A153M.

B. Welding Inspections and Tests:

1. Perform tests of field welds as specified for shop welds.

C. Shop Applied Coating: After delivery of substation, inspect and repair damage to shop applied coatings:

1. Repair minor film scratches and other blemishes in film surfaces in accordance with coating manufacturer's required procedures and materials.

2. Prepare a repair sample that matches the existing substrate, coating, and damage, with repair applied in accordance with the repair procedure, and subject to salt spray test per ASTM B117.

3. Finished repairs must match original finish for color and gloss, must adhere to original finish, and must exhibit no removal of coating film or blistering during dry adhesion testing when tested in accordance with ASTM D3359.

4. Remove coated items damaged beyond repair and replace with newly fabricated and coated items.

END OF SECTION

SECTION 34 21 28

TRACTION POWER DC INSULATED CONDUCTORS AND CABLES

PART 1 - GENERAL

1.01 SUMMARY

A. Section Includes:

1. Requirements for furnishing and installing insulated cables and conductors for DC Traction Power System as specified in this specification:

a. DC Positive feeder cable.

b. DC Negative feeder cables.

c. DC Negative bonding cables.

d. Cable termination and splicing.

1.02 REFERENCES

A. This section incorporates by reference the latest revisions of the following documents:

1. The American Society of Mechanical Engineers (ASME):

a. ASME NQA-1 Quality Assurance Requirements for Nuclear Facility Applications.

2. American Society for Testing and Materials (ASTM International) (ASTM):

a. ASTM B3 Soft annealed copper wire.

b. ASTM B8 Standard Specification for Concentric-Lay-Stranded Copper Conductors, Hard, Medium-Hard, or Soft.

c. ASTM B496 Specification for Compact Round Concentric-Lay-Stranded Copper Conductors.

d. ASTM D2802 Ozone Resistant Ethylene-Alkene Polymer insulation for wires and cable.

e. ASTM D747 Standard Test Method for Apparent Bending Modulus of Plastics by Means of a Cantilever Beam.

3. Code of Federal Regulations (CFR):

a. 10 CFR 50, Appendix B Quality Assurance Criteria for Nuclear Power Plants and Fuel Reprocessing Plants.

4. Institute of Electrical and Electronics Engineers (IEEE):

a. IEEE 1202 IEEE Standard for Flame-Propagation Testing of Wire and Cable.

5. International Cable Engineering Association (ICEA):

   a. ICEA S-96-659 Standard for Nonshielded Cables Rated 2001-5000 V for use in the distribution of electric energy.

6. International Electrical Testing Association (NETA):

   a. NETA ATS Standard for Acceptance Testing Specifications for Electrical Power Equipment and Systems.

7. National Fire Protection Association (NFPA):

   a. NFPA 130 Standard for Fixed Guideway Transit and Passenger Rail Systems.

8. National Electrical Manufacturers Association (NEMA):

   a. NEMA WC 71 Nonshielded Cables Rated 2001-5000 V for Use in the Distribution of Electric Energy.

9. Underwriters Laboratories (UL):

   a. UL 1072 Medium-Voltage Power Cables.

   b. UL 1685 Standard for Vertical-Tray Fire-Propagation and Smoke-Release Test for Electrical and Optical-Fiber Cables.

10. National Electrical Contractors Association (NECA):

   a. NECA 1 Standard For Good Workmanship In Electrical Construction (ANSI).

1.03 SUBMITTALS

A. Submit:

1. Submit Product Data on the following items:

   a. Medium-voltage single-conductor 2.4 KV unshielded cable.

   b. Splicing, connecting, and terminating materials.

2. Product information for each type and size of wire and cable must include the following:

   a. Complete electrical ratings for wire and cable.

   b. Manufacturer of the wire and cable and location where cable is manufactured.

   c. Number and size of strands composing each conductor.

   d. Conductor insulation and shielding composition and thickness.

   e. Average overall diameter of finished wire and cable.

   f. Conductor resistance and reactance in ohms per 1,000 feet at 20 degree C.

   g. Storage instructions:

h. Minimum bending radius, in inches, for both individual conductors within the cable and the multi-conductor cable itself.

i. Pulling tension limits, in pounds.

j. Sidewall pressure limits, in pounds per foot of bend radius.

k. Instructions for stripping jacket, sheath, tape, binder, filler, and semiconducting insulation shield with minimum effort without damaging the insulation.

l. Requirement for installing, splicing, and terminating conductors, shielding, ground wire and sheath.

3. Submit Installation Plans:

a. 2.4kV Cable: Installation plan with detailed description of how cables are to be installed in raceways. Include details for protecting cable as it is placed in the raceway.

4. Submit Test Procedures, Results, and Reports:

a. Certified test reports for Flame Tests, Accelerated Aging Tests, Production Tests, and Final Tests.

b. Test procedures for each test.

c. Test results for each test a maximum of 10 days after date test was performed.

d. Field Test Report, including the following:

1) Continuity test.

2) Insulation resistance test.

3) Cable insulation tests.

1.04 QUALITY ASSURANCE / QUALITY CONTROL

A. Quality Assurance Program:

1. Manufacturer's Qualification: Minimum of 5 years of experience in manufacturing of specified materials/products with record of successful in service performance.

2. Cable must be manufactured and tested under the control of a Quality Assurance program that meets the requirements of 10 CFR 50, Appendix B, as elaborated in ASME NQA-1, for materials traceability only.

B. Qualifications:

1. Manufacturer's Qualification: Minimum of 5 years of experience in manufacturing of specified material/products.

2. Cable: Cable must have a performance record demonstrating a minimum of 30 years successful operating experience in transit, utility or industrial power applications for the insulation compound and conductor assemblies provided.

3. Installer Qualifications:

a. Contractor must provide personnel qualified in installation, splicing and termination of medium voltage cable. Personnel must have direct experience with at least ten projects similar in scope and complexity with work shown on Contract Documents and specific to the cable being provided.

4. Cable Testing: Testing organization must be NETA certified with a minimum of 10 years of experience in testing of medium-voltage power cables using Very Low Frequency (VLF) testing methods.

1.05 DELIVERY, STORAGE, AND HANDLING

A. Reels and Marking: Cables must be reeled, factory sealed and marked in accordance with AEIC CS8.

B. Ship each unit securely wrapped, packaged, and labeled for safe handling in shipment and to avoid damage.

C. Deliver wires and cables to the site in unbroken standard coils or reels with attached tag bearing Manufacturer;s name, wire trade name, and UL listing information

D. Provide markings on the wires and cables in accordance with referenced standards. Lable items with UL approval.

E. Store wire and cables in a secure and dry storage facility, in accordance with NECA1

PART 2 - PRODUCTS

2.01 MATERIALS

A. General Requirements:

1. Comply with NFPA 130.

2. Conductors: Annealed, uncoated copper, round or compact, concentric-lay stranded per ASTM B8 or B496.

3. Insulation: Ethylene-propylene rubber (EPR) meeting electrical and physical requirements of NEMA WC 71, ICEA S-96-659, and UL 1072:

a. EPR insulation must be compounded by the cable manufacturer or submit evidence of minimum 40 years of continuous manufacture using the EPR compound currently in use.

b. For flexibility, the insulation compound must have an Apparent Bending Modulus of 2600 psi or less in accordance with Standard Test Method ASTM D747.

2.02 MANUFACTURED PRODUCTS

A. Medium-Voltage Single conductor Cable, 2.4 KVRated:

1. General:

a. Type MV-90, 90 degrees C, unshielded, size as indicated.

b. Cable must be suitable for use on service and feeders, indoors or outdoors, in wet or dry locations, or in raceway/duct. The cable must be sunlight

resistant, suitable for installation at 0 degrees C, and for installation in cable tray.

c. Cables must meet or exceed requirements of NEMA WC 71 and UL 1072.

d. See the Source Quality Control section, below, for flame test requirements.

2. Insulation Level: 100 percent, unless indicated otherwise.

3. Overall Sheath Jacket: Thermosetting low-smoke zero-halogen jacket.

4. Acceptable Manufacturer and Product:

a. The Okonite Company, Okoguard-Okoclear or approved equal by the EOR.

B. 2.4 Kv Power Cable Terminations, Taps and Splices:

1. Terminations:

a. Terminals must be long-barrel compression type. Compression tools must apply a hexagonal compression using mechanical, electrical or hydraulic power mechanism that ensures a complete compression cycle.

b. Double-bolted NEMA 2-hole terminals must be used at locations where rotation of a single bolted terminal would result in contact or unacceptable clearance with other conductors or the enclosure and for terminations of conductors No. 2 AWG and larger.

c. Acceptable Manufacturers:

1) AMP, Thomas & Betts, Burndy or approved equal by the EOR.

2. Taps and Splices: No splices are allowed on a project with out ST's approval. Provide splices rated 5 kV and suitable for installation on unshielded 2.4kV or 5kV cable, comprised of splice connector, heavy-duty splice insulator/jacket, and environmental sealant:

a. Splice Connector: long-barrel, copper compression splice connector.

b. Splice insulator/jacket: wraparound, factory-expanded EPDM sleeve applied over rubber mastic tape making the completed assembly completely waterproof.

c. Splices must be watertight in locations with presence of moisture.

d. Where splices are detailed on the issued for Construction Drawings, install splice as shown and as directed by Sound Transit.

1) In manholes and pull boxes, the splices must be submersible.

e. Acceptable Manufacturer:

1) Burndy Copper Compression Connector, Type YS, or approved equal by the EOR.

2) 3M 5-8kV Cold Shrink Rubber splicing Kit, 5740-series, or approved equal by the EOR.

2.03 EQUIPMENT

A. Electrical Megohmmeter for Insulation Testing:

1. 1000 Vdc output voltage suitable for resistance measurement from 500 kilohm to 500,000 megohms. Use a megohmmeter with an internal bleeder resistor for discharge.

2.04 SOURCE QUALITY CONTROL

A. Factory Design Tests:

1. Single-conductor unshielded cable:

a. Flame Test: Insulating material must meet the IEEE 1202 exposure requirements for cable char height and total smoke released and peak smoke release rate of UL 1685.

B. Factory Production Tests:

1. Single-conductor unshielded cable:

a. On each reel, perform tests in NEMA WC 71 designated as “Electrical Tests on Completed Cable.”

b. Submit certified test reports documenting production testing.

PART 3 - EXECUTION

3.01 INSTALLATION

A. For general installation and installation submittal requirements see Section 26 05 00 - Common Work Results for Electrical.

B. Medium-Voltage Cable Terminations and Splices

1. Terminations and splices must be made in a clean, dry, and warm environment. Vaults and boxes must be cleaned, dried and warmed to a temperature required by the splice or termination manufacturer.

2. Install terminations, splices, connectors, connecting lugs, and tap plugs in accordance with the cable, terminator, and splice manufacturers’ instructions.

3. Torque bolted connections with a torque wrench to the values specified by manufacturer.

4. Connect medium-voltage cable supplied under this Contract to the equipment at its source and load ends. Connect appropriate, existing, properly terminated cables supplied under other contracts to the equipment provided under this Contract.

5. Locations of medium-voltage splices must be shown and stationed on as-built drawings and identified prominently and permanently on tunnel walls.

3.02 FIELD QUALITY CONTROL

A. Perform wire and cable tests in accordance with NETA ATS

1. Testing organization must be NETA certified with ten years of documented experience in testing of medium-voltage power cables as required below.

2. Testing and safety procedures must conform to the requirment of IEEE 400.2, cable manufacturer, test equipment manufacturer and testing organization.

B. Continuity Tests.

1. Check continuity from point to point and check for shorts to ground with an ohmmeter.

2. Perform tests after splicing is complete.

C. Wire and Cable Insulation Resistance Tests.

1. Measure insulation resistance with a 1000 Vdc megohmmeter. Insulation resistance measurement may be made with the VLF test set if equipment is suitable for that purpose.

2. Measure insulation resistance between conductor and ground.

3. Test cables after splices and terminations are complete but before cable is terminated on equipment.

END OF SECTION

SECTION 34 21 73

TES SYSTEM STUDIES

PART 1 - GENERAL

1.01 SUMMARY

A. Section includes:

1. Requirements for the following computer-based studies and reports for AC and DC switchgear associated with traction substations:

a. Load flow Analysis study.

b. Short-circuit study.

c. AC coordination study.

d. DC coordination study.

e. Arc-flash hazard analysis study.

1.02 REFERENCES

A. Section incorporates by reference the latest revisions of the following documents, or if standard is adopted by the Authority Having Jurisdiction (AHJ), the latest revision adopted:

1. American National Standards Institute (ANSI):

a. ANSI Z535.4 - Product Safety Signs and Labels.

2. Institute of Electrical and Electronics Engineers (IEEE):

a. IEEE 241 - Recommended Practice for Electric Power Systems in Commercial Buildings.

b. IEEE 242 - Recommended Practice for Protection and Coordination of Industrial and Commercial Power Systems.

c. IEEE 399 - Recommended Practice for Industrial and Commercial Power Systems Analysis.

d. IEEE 1015 - Recommended Practice for Applying Low-Voltage Circuit Breakers Used in Industrial and Commercial Power Systems.

e. IEEE 1584 - Guide for Performing Arc Flash Hazard Calculations.

f. IEEE C37.20.1 - Standard for Metal-Enclosed Low-Voltage (1000 Vac and below, 3200 Vdc and below) Power Circuit Breaker Switchgear.

g. IEEE C37.46 - Standard Specifications for High-Voltage (>1000 V) Expulsion and Current-Limiting Power Class Fuses and Fuse Disconnecting Switches.

h. IEEE C57.96 - Guide for Loading Dry-Type Distribution and Power Transformers.

3. Insulated Cable Engineers Association (ICEA):

a. ICEA P-32-382 - Short Circuit Characteristics of Insulated Cables.

b. ICEA P-45-482 - Short-Circuit Performance of Metallic Shields and Sheaths on Insulated Cable.

4. National Electrical Manufacturer's Association (NEMA):

a. NEMA MG 1 - Motors and Generators.

5. National Fire Protection Association (NFPA):

a. NFPA 70 - National Electrical Code (with amendments by the Authority Having Jurisdiction).

b. NFPA 70E - Standard for Electrical Safety in the Workplace.

1.03 SUBMITTALS

A. Product Data: Computer software to be used for system simulation.

B. Product Certificates:

1. For short-circuit and overcurrent protective device coordination study, submit certification of compliance with IEEE 399.

2. For arc-flash hazard analysis, submit certification of compliance with IEEE 1584.

C. Qualifications:

1. Submit names, contact information and qualifications including references for at least five short-circuit, coordination study and arc-flash calculations of comparable complexity within the last five years.

D. Provide the following reports for each substation:

1. Input data including completed computer program input data sheets.

2. Load flow Analysis (LFA) Report:

a. LFA is not required for design bid built project.

3. Short-Circuit Study and Equipment Evaluation Reports.

4. AC Coordination Study Report: Submit at the same time as DC Coordination Study Report.

5. DC Coordination Study Report.

6. Arc Flash Hazard Analysis Report.

a. Confirmation of existing TPSS Arc flash labeling is sufficient enough with the incident energy contributed by the new link extension.

1.04 QUALITY ASSURANCE

A. Studies must use computer programs that are distributed nationally:

1. Software algorithms must comply with requirements of standards and guides specified in this Section.

2. Manual calculations or calculations using spreadsheet software are not acceptable.

B. Study Specialist Qualifications:

1. Analysis and reports must be prepared by an individual experienced in the application of computer simulations to traction power systems.

2. Qualifications must be submitted for approval and must document that the individual has at least five years' experience and has prepared five studies of comparable complexity.

3. Analysis and reports must be supervised and signed by a professional electrical engineer licensed in the State of Washington.

C. Studies, analysis, and reporting must comply with the following:

1. IEEE 241 and 242 for short-circuit and coordination analysis.

2. IEEE 399 for general study procedures.

3. IEEE 1584 and NFPA 70E for arc-flash hazard analysis.

4. NFPA 70 (with AHJ amendments).

D. Detail Requirements about Load Flow Analysis (LFA):

1. A Basis of Analysis (BOA) memo must be submitted to Sound Transit for review and approval prior to performing a TES load flow analysis. The BOA memo must include the following, at a minimum:

a. List of reference documents to be used to develop the TES model

b. Simulation scenarios to be modeled

E. Evaluation criteria and methods of analysis that will be used to define acceptable values for the following results and any other results required for the load analysis:

1. Train voltage.

2. Rail-to-ground voltage.

3. TRU loading.

4. Traction power cable loading.

5. Study area limits, including all passenger stations and traction power substations to be modeled.

6. Operational assumptions if not defined by or that vary from Set 010- Operations or reference documents.

7. TES assumptions if not defined by or that vary from the Sets 220- Traction Power and 221- OCS or reference documents.

8. Track assumptions if not defined by or that vary from the 500 Sets- Track or reference documents.

9. Vehicle assumptions if not defined by or that vary from the Set 421- Light Rail Vehicle or reference documents.

10. Other assumptions if not defined by or that vary from the requirements sets or reference documents.

11. Load flow analysis reports must include the following information, at a minimum:

    a. Executive summary.

    b. Background and purpose.

    c. Geographical limits of the model (i.e. extents of the simulated TES system and operations) and analysis limits, if different.

    d. Description of modeling software.

    e. Description of model setup and key model inputs used for the TES, operations, vehicles, signals, and track, as well as the resources used to obtain this information.

    f. Assumptions used to develop the model and any deviations from the latest design or design criteria.

    g. Evaluation criteria and methods of analysis.

    h. Scenarios modeled.

    i. Results analysis.

    j. Conclusion, including recommendation & next steps.

    k. Appendices.

12. Load flow analysis reports must have appendices that include the following:

    a. Additional resources and assumptions used for model development and analysis, outside of the project documents, such as data requests, meeting minutes, and emails.

    b. Additional vehicle parameters, if not already defined in the report, such as:

        1) Auxiliary load calculations and assumptions for each vehicle type, to show how the auxiliary loads are accounted for in the model

        2) Tractive effort/current curves for each vehicle type, to show the vehicles' tractive effort versus speed and current demand, as well as any forced reduced performance behavior

    c. LFA outputs (e.g. charts, graphs, tables) for each scenario, based on the purpose of the analysis. Typical outputs may include:

        1) Route train voltage profile graphs showing all train voltage values along the alignment (within the area of analysis) for each scenario, used for train voltage analysis.

        2) Summary table/s identifying minimum train voltage values for each scenario, used for train voltage analysis.

        3) Route rail-to-ground voltage profile graphs showing all rail voltage values along the alignment (within the area of analysis) for each scenario, used for rail voltage analysis.

4) Summary table/s identifying maximum rail-to-ground voltage values for each scenario, used for rail voltage analysis.

5) TPSS peak 15-minute and 2-hour RMS current graphs and tables, used for anticipated utility demands and TRU loading analysis.

6) TPSS peak 15-minute and 2-hour average power graphs and tables, used for anticipated utility demands and TRU loading analysis.

7) Traction power cable 2-hour RMS current graphs and tables, used for cable loading analysis.

8) System energy graphs, to show system sources versus system loads.

9) Operations string charts showing the positioning of all trains along the alignment versus time, to identify train meet points.

PART 2 - PRODUCTS

2.01 SIMULATION SOFTWARE

A. Acceptable Software: Subject to approval, simulation software must be the product of one of the following

1. CYME International.

2. Power Analytics Corporation.

3. Easy Power.

4. Operation Technology, Inc. / ETAP.

5. SKM Systems Analysis Inc.

2.02 SOFTWARE REQUIREMENTS

A. Computer software for short-circuit study must include analytical features described in IEEE 399 as Mandatory, Very Desirable, and Desirable.

B. Computer software:

1. Must be capable of plotting and diagramming time-current characteristic curves as part of the output.

2. Must report device settings and ratings of all overcurrent protective devices.

3. Must demonstrate selective coordination by computer-generated, time-current coordination plots using different colors for each protective device.

4. DC analysis results and settings must be converted and integrated into the software- generated coordination plots if DC analysis is done separately and manually.

PART 3 - EXECUTION

3.01 DATA COLLECTION AND COORDINATION

A. Collect data from equipment suppliers, other contractors or subcontractors, power utility, and Sound Transit in order to complete the analysis.

B. Coordinate required distribution equipment ratings and protective device settings to provide a fully-integrated distribution system that is properly coordinated and meets the requirements of NFPA 70 (with Washington amendments).

C. Proceed with final analysis only after relevant equipment has been finally determined and submittal information is sufficient to produce accurate simulation results.

D. AC Systems Study requires the characteristics and loads of both AC loads and DC traction power loads.

3.02 SYSTEM DOCUMENTATION

A. Collect and tabulate the following input data to support studies:

1. Product data for overcurrent protective devices including devices furnished by others and involved in overcurrent protection.

2. Resistance and reactance data and fault current data from serving utility.

3. Electrical Distribution System Diagram. Provide documentation in both paper and electronic formats for the following:

a. Circuit breaker and fuse current ratings and types.

b. Relays and associated power and current transformer ratings and ratios.

c. Transformer ratings including kVA ratings for each cooling type, primary and secondary voltages, connection type, transformer impedance, and X/R ratios. Provide information on transformer over-temperature sensors provided.

d. Cable information including number in parallel, conductor material, compaction, sizes, insulation type and temperature ratings, and cable length.

e. Busway material, ampacity, and impedance.

4. Motor horsepower, full-load current and code letter according to NEMA MG 1.4.

a. Equipment data sheets:

1) Special load considerations including starting inrush currents and frequent starting.

2) Transformer characteristics, including primary protective device recommendations, inrush current, and thermal damage curve.

3) Motor full-load current, locked-rotor current, service factor, starting time, type of starter, and thermal damage curve.

4) Utility protective device types, ratings and relay settings.

5) Special overcurrent protective device settings or types if required by the serving utility.

6) Time-current characteristic curves of devices to be coordinated.

7) Circuit breaker manufacturer, frame size, interrupting capacity, ampere or current sensor rating, long-time adjustment range, short-time adjustment range, and instantaneous adjustment range.

8) Overcurrent relay manufacturer, type, ampere tap range, time-delay range, instantaneous range, and current transformer ratio.

9) Panelboard and switchboard, ampere rating and interrupting rating.

B. Use equipment identification tags that are consistent with electrical distribution system diagrams, overcurrent protective device submittals, input and output data, and recommended device settings.

3.03 SHORT-CIRCUIT STUDY

A. Calculate maximum available fault current in amperes rms symmetrical at overcurrent protective device positions throughout the electrical distribution system. Calculation must be for current immediately after initiation of a three-phase bolted fault at each of the following:

1. Switchgear and switchboard bus.

2. Distribution panelboard.

3. Branch circuit panelboard.

B. Analyze the electrical distribution system from normal and alternate power sources throughout electrical distribution system. Include studies of system switching configurations and alternate operations that could result in maximum fault condition.

C. Calculate momentary and interrupting duties on the basis of maximum available fault current.

D. Calculations to verify interrupting ratings of overcurrent protective devices must comply with IEEE 241 and IEEE 242.

1. For transformer, comply with IEEE C57.96.

2. For low-voltage circuit breakers, comply with IEEE 1015 and IEEE C37.20.1.

3. For low-voltage fuses, comply with IEEE C37.46.

E. Final Report:

1. Indicate calculated X/R ratios and equipment (half-cycle) fault currents on electrical one-line diagram.

F. Equipment Evaluation Report:

1. 600V overcurrent protective devices: Ensure that interrupting ratings are equal to or higher than calculated available half-cycle symmetrical fault current.

2. Devices and equipment rated for asymmetrical fault current: Apply multipliers listed in the Standards to half-cycle symmetrical fault current.

3. Conductors:

a. Verify adequacy of phase conductors at maximum three-phase bolted fault currents.

b. Verify adequacy of equipment grounding conductors and grounding electrode conductors at maximum ground-fault currents.

c. Ensure that short-circuit withstand ratings are equal to or higher than calculated half-cycle symmetrical fault currents.

3.04 AC COORDINATION STUDY

A. Perform coordination study using approved computer software. Prepare a written report using results of short-circuit study. Comply with IEEE 399:

1. Calculate the maximum and minimum half-cycle short-circuit currents.

2. Calculate the maximum and minimum ground-fault currents.

B. Comply with IEEE 241 and IEEE 242 recommendations for fault currents and time intervals.

C. Transformer Primary Overcurrent Protective Devices:

1. Devices must not operate in response to the following:

a. Transformer magnetizing inrush currents.

b. Self-cooled, full-load current or forced-air-cooled, full-load current, as appropriate. For transformer equipped for future fan cooling option, overcurrent protective devices must be capable of resetting to the higher forced-air-cooled rating.

c. Permissible transformer overloads according to IEEE C57.96 if required by expected loading or emergency conditions.

D. Conductor Protection:

1. Protect cables against damage from fault currents according to ICEA P-32-382, ICEA P-45-482, and conductor melting curves in IEEE 242.

2. Demonstrate that equipment withstands the maximum short-circuit current for a time equivalent to the tripping time of the primary protection or total clearing time of the fuse.

3. To determine temperatures that damage insulation, use curves from cable manufacturers or from listed standards indicating conductor size and short-circuit current.

E. Coordination Study Report: Prepare a written report including the following:

1. A table with settings selected for overcurrent protective devices including:

a. Device identification tag.

b. Current transformer ratios and relay curve, tap, time-dial and instantaneous pickup settings.

c. Circuit breaker sensor rating and long-time, short-time and instantaneous trip settings.

d. Fuse type and current rating.

e. Ground-fault relay pickup and time-delay settings.

2. Coordination Curves:

a. Provide documentation of settings of overcurrent protective devices to achieve selective coordination.

b. Provide time-current curves to graphically illustrate that adequate time separation exists between devices installed in series, including utility upstream devices.

c. Prepare separate sets of curves for the switching schemes and for emergency periods where the power is fed from an alternate source.

d. Include the following information:

1) Device identification tag.

2) Time and current multipliers for curves.

3) Three-phase and line-to-ground damage points for each transformer.

4) No damage, melting, and clearing curves for fuses.

5) Cable damage curves.

6) Transformer inrush points.

7) Maximum fault-current cutoff point.

3. Prepare and include in study completed data sheets for setting of overcurrent protective devices.

4. Graphs must be plotted in both distinctive colors and line styles for each time-current characteristic and damage curve so that black-and-white copies of graphs are still understandable.

5. Provide both bound color copies and color electronic files in PDF format for report.

3.05 DC COORDINATION STUDY

A. Include the following as a minimum:

1. DC bolted positive to negative and positive to ground fault calculations.

2. Protective device range and setting calculations showing basis for each recommended relay setting.

3. Plots of rectifier design capability with actual margin of coordination (from breaker trip to design capability) clearly indicated at each of 100, 150, 300, and 450 percent full- load current and short-circuit current.

3.06 ARC-FLASH HAZARD ANALYSIS

A. Perform Arc-Flash Hazard Analysis with the aid of computer software intended for this purpose.

B. Perform analysis in conjunction with short-circuit and coordination studies.

C. Submit the results of the analysis in a table and include device or bus identification tag, bolted fault and arcing fault current levels, flash protection boundary, distances, personal-protective equipment classes and arc-flash incident energy (AFIE) levels.

D. Perform the analysis under worst-case fault conditions, and describe in the final report when applicable, how these conditions differ from worst-case bolted fault conditions.

E. Provide and install self-adhesive equipment labels in compliance with ANSI Z535.4 to document arc flash hazard and required personal protective equipment.

END OF SECTION

SECTION 34 21 74

TPSS RELIABILITY PROGRAM

PART 1 - GENERAL

1.01 SUMMARY

A. Section includes:

1. Requirements for establishment and maintenance of a TPSS System Reliability Program, which must be applied to obtain a valid assessment of the MTBF capabilities of the designated equipment and subsystems furnished under this Contract. This program must include:

a. The furnishing of predicted design reliabilities.

b. Field reliability testing.

c. Continual comparisons of field reliability testing.

d. All corrective measures required to obtain satisfactory performance.

B. The equipment and subsystems to be tested for system reliability compliance must consist of:

1. LCMS PLC.

2. LCMS HMI.

3. IED PLC.

4. IED HMI.

5. 1500V DC Circuit Breaker including Cathode.

6. 26.4KV/12.5KV AC Circuit Breaker.

7. Battery and Battery Charger.

8. Rail to ground including Thyristor, Contactor, and Surge Arrester.

C. The Contractor will be permitted to submit reliability data previously acquired from similar equipment and subsystems for predicted reliabilities. If equipment selected is identical to equipment used within the existing Sound Transit operating system, the requirements herein can be waived upon written acceptance from the Resident Engineer. The contractor must submit this request in writing with the specifics of the equipment and where used on the existing Sound Transit system.

D. Field reliability testing must be on a subsystem basis with the subsystem as defined above. The Contractor must initiate the field reliability testing at Substantial Completion. The testing duration must be one year. If Chargeable Failures have accumulated to the extent that the requirements for MTBF for the sub-system cannot be met, the demonstration period must be extended in order to obtain the cycles/mean time between failure thresholds specified herein. In the event demonstration period extends beyond Acceptance the Sound

Transit designated personnel must maintain equipment and collect field reliability data. The Contractor must coordinate data collection with Sound Transit personnel.

E. Definitions

1. The following definitions apply specifically to terms used in this Section:

a. Mean Time Between Failure (MTBF): The average time that the equipment will operate without a chargeable failure:

$$\text{MTBF} = \frac{\text{operating time}}{\text{number of chargeable failures}}$$

b. Minimum MTBF (MMTBF):

1) The value specified in the Table of Reliability Requirements by Sound Transit for minimum performance without rejection.

c. Chargeable Failure:

1) All failures which require repair or replacement of contractor provided components or parts are chargeable unless specified otherwise herein, or unless determined by Sound Transit to be caused by a condition external to the equipment under test. Failure due to workmanship deficiencies must be counted as chargeable. Transient failures when proven to be caused by a single condition must be counted only as a single failure. Also, transient conditions which temporarily prevent a function from being successfully performed must be counted as chargeable failures unless it is shown that they are the result of external influences beyond the requirements of this Specification. Non-Chargeable Failures.

2) Failures which are proven to be the result of conditions exceeding those specified, (i.e., floods, derailments, vandalism, human error not normally protected against, etc.) must be classed as non-chargeable and must not be included in the reliability evaluation. Failure of parts installed or provided by others, such as network switches, that cause a dependent failure of a subsystem installed by the Contractor must not be included in the reliability evaluation.

d. Failure Rate:

1) The reciprocal of MTBF. For this reliability assessment program, the failure rate is assumed to be constant throughout the life of the equipment.

e. Independent Failure:

1) A failure which will independently cause equipment performance outside of specified limits - one which occurs without being related to the failure of the associated items.

f. Dependent Failure:

1) A failure of a part which is a direct result of an independent failure - one which is caused by the failure of an associated item(s). Dependent failures are non-chargeable failures.

g. Simultaneous Failure: In the event simultaneous or multiple failures occur, each failed part which will independently prevent satisfactory equipment performance must be counted as an equipment failure.

1.02 SUBMITTALS

A. Submit:

1. Reliability Program:

a. Within 180 days after award of the Contract, submit for review and approval the proposed reliability program plan. The program must include, but not be limited to:

1) Organization and responsibilities of the proposed reliability effort.

2) Details of the Design and component selection and screening processes proposed to be used to meet the reliability requirements.

3) Details of the procedures proposed to be used to calculate MTBF predictions.

4) Identification of the sources proposed to be used for component reliability data.

5) Proposed serialized type forms and reports, including preventive maintenance and discrepancy reports specifically for the joint use of the Contractor and Sound Transit during the field reliability assessment-testing program.

2. Predicted Reliability Reports:

a. The Contractor must submit the predicted reliability study 60 days prior to component procurement. The report must provide the predicted reliability for each of the included subsystems and propose an alternate design or equipment for the approval of Sound Transit, if areas of common failure appear inherent in the specified design mode or equipment.

b. Update the reliability report and re-issue each 180 days until design of the designated subsystems is complete. Indicate for each subsystem the estimated percent of design completion upon which the reliability prediction is made.

c. Include in the report, an analysis of items for which the prediction does not meet the reliability requirements or for which the prediction had changed significantly from the last report. Describe the corrective action proposed in this Section of the report for items predicted not to meet the reliability requirements.

d. Provide an updated report to Sound Transit whenever deviations of the predicted reliabilities are encountered during design (i.e., prior to production). If these reports indicate a marked decrease in predicted reliability, Sound Transit may require an alternate design or equipment

change to increase predicted reliability to the requirements specified in the Table of Reliability Goals.

3. Reliability Testing Procedures:

a. Obtain from Sound Transit approval of detailed test procedures before field reliability assessment testing begins. The test procedures must include, but not be limited to, the following details:

1) A listing of components by description, part number, and quantity comprising each line item in the Table of Reliability Goals.

2) Graphical sample presentation of the test plan and table to be used.

3) Burn-in (debugging) time.

4) Performance parameters to be measured.

5) Performance limits beyond which a failure has occurred.

6) Sample report and log forms to be used.

1.03 CONSTRUCTION OF TABLE OF RELIABILITY GOALS

A. The Table of Reliability Goals is constructed of line items which represent identified subsystems. The specified table as constructed is shown at the end of this Section.

1.04 MATERIALS INVOLVED IN RELIABILITY PROGRAM

A. The equipment considered part of each line item must be as follows:

1. Local Control and Monitoring System (LCMS):

a. All equipment, wire, terminals, etc. starting at the input and ending at the function outputs. Major components including: signal processor with I/O, plug connectors, component PC cards and connectors, capacitors, resistors, fuses, diodes, pushbuttons, switches, and data switching devices between processors.

2. LCMS HMI:

a. All equipment, wire, terminals, etc. of the display and human interface portion of the LCMS.

3. Intelligent Electronic Device (IED):

a. All equipment, wire, terminals, etc. starting at the point of input and ending at the function outputs. Major components including: signal processor with I/O, plug connectors, component PC cards and connectors, capacitors, resistors, fuses, diodes, pushbuttons, switches, and data switching devices between processors.

4. IED HMI:

a. All equipment, wire, terminals, etc. of the display and human interface portion of the IED.

5. DC Circuit Breakers:

   a. All equipment, wire, terminals, etc. of the DC Circuit Breakers.

6. AC Circuit Breakers:

   a. All equipment, wire, terminals, etc. of the AC Circuit Breakers.

7. Battery and Battery Charger

   a. All equipment, wire, terminals, etc. of the battery and batter charge equipment.

PART 2 - PRODUCTS (NOT USED)

PART 3 - EXECUTION

3.01 ASSESSMENT PROGRAM

A. Verification that the equipment fulfills the reliability requirements described herein must be per the ST approved reliability plan and as prescribed herein.

3.02 TEST PREPARATIONS

A. The Contractor's personnel assigned to participate in field data collection for reliability testing must be fully trained in their assigned tasks and be familiar with the ST approved reliability test plan. It is expected that these must be the Contractor personnel assigned to maintain the System until Final Acceptance.

B. The Contractor personnel assigned to evaluate reliability data and supervise the overall execution of the reliability plan must have performed a similar function for at least one prior major transit signals project.

3.03 FIELD RELIABILITY DEMONSTRATION TESTING

A. The minimum reliability requirements for the various equipment types and sub-systems are specified in the Table of Reliability Goals.

B. Test all designated equipment and subsystems.

C. Modify or replace any subsystem or component part rejected by the reliability assessment program without additional cost to Sound Transit. Any such modification or replacement must be subject to the approval of Sound Transit and subjected to the same reliability assessment program as the original equipment.

D. Reliability tests must start and end as described within this specification. Data collection must be per device; per subsystem; for each location with MTBF results cumulative of all like devices.

3.04 ASSESSMENT REPORTS

A. Submit reliability assessment report every three months showing comparison of field reliability testing results with accept-reject criteria for each line item in the Table of Reliability Goals.

3.05 FINAL DOCUMENTATION

A. Submit a final reliability assessment report upon completion of specified reliability testing.

3.06 FAILURE DOCUMENTATION

A. Provide a report of any malfunction or fault which prevents or limits equipment from performing its function in accordance with these requirements. The report must include:

1. Failure Rate.

2. Independent Failure.

3. Dependent Failure.

4. Simultaneous Failure.

5. Chargeable Failure.

6. Non-chargeable Failure.

3.07 PROCEDURE

A. Test Logs:

1. The logs must contain the following information:

a. Identification of the component and subsystem by location, function, serial numbers (if applicable), and line item of Table of Reliability Goals to which the equipment is charged.

b. Number of like components and subsystems in service.

c. Date and time equipment was placed in service.

d. Date and time of each failure.

e. Cause of each failure.

f. Classification of each failure (chargeable, not chargeable).

g. All repairs and adjustments made and reasons for same.

2. Once each month, review the logs and make the following entries:

a. Accumulated operating hours per line item.

b. Accumulated chargeable failures per line item.

B. Preventive Maintenance:

1. Preventive maintenance procedures specified in the ST approved operating and maintenance manuals for the equipment during normal operation must be performed during the reliability testing period. Any additional preventative maintenance during the period of the Contractor's maintenance responsibility must be recorded and evaluated for their effect on the reliability test.

2. Other maintenance actions required on behalf of other equipment such as troubleshooting, inspection, or downtime investigations must be termed as preventive maintenance and classed as non-chargeable failures when performed in connection with reliability assessment.

C. Equipment Failure Record:

1. Maintain a failure record for each line item. The record must be designed to permit keeping of the entire test history of each line item on a single sheet so that behavior of the line items may be easily recognized. This record must show all component failures for the line item.

D. Verifying Repair:

1. Following repair or corrective action and prior to resumption of reliability testing, it must be permissible to operate a maximum one week burn-in test to verify the effectiveness of the repair. Failures and repair time during this period must be recorded and reported but not used in determining compliance with MTBF requirements.

E. Corrective Action:

1. When any reliability test reaches a reject decision, the test will be discontinued for that line item. Immediately notify Sound Transit. Develop and propose a plan for correction of the deficiencies. Sound Transit will review such corrective action and may require handling as a design change or modification.

F. Failure Summary Record:

1. Maintain a failure summary record containing all the information needed to reach an accept/reject decision on the system under test. The summary must include all component failures considered chargeable on all like equipment under test. The record must present the current test status, including information on the total hours of test, failures, and MTBF of all units on test.

3.08 MTBF EVALUATION CRITERIA

A. Acceptance or rejection of equipment must be on an individual function basis with the individual functions being the line items presented in the Table of Reliability Goals. Accept or reject decisions must be based upon the procedures, formulae, and definitions specified herein. If test results fall short of the specified hours or cycles then the Contractor is required to propose a corrective action acceptable to Sound Transit that may include a redesign or selection of alternative equipment in the subsystem if necessary. An extension of the reliability demonstration test must then restart to prove the corrective action was sufficient.

TABLE OF RELIABILITY GOALS

ITEM	DESCRIPTION	MTBF Hours
1.	LCMS PLC	100,000
2.	LCMS HMI	100,000
3.	IED PLC	100,000
4.	IED HMI	100,000

5	1500 VDC Circuit Breaker	Note 1
6	12.5KV/26.4KV AC Circuit Breaker	Note 2
7	Battery and Battery Charger	100,000
8	Rail to Ground Equipment	100,000
Note 1: Use IEEE C37.14 endurance requirements. Note 2: Use IEEE C37.06 endurance requirements.		

END OF SECTION

SECTION 34 23 01

OVERHEAD CONTACT SYSTEM GENERAL REQUIREMENTS

PART 1 - GENERAL

1.01 SUMMARY

A. Section includes:

1. Requirements for the Traction Electrification Distribution System referred to hereafter as the Overhead Contact System (OCS) consists of equipment needed to provide that part of the electrical circuit between the terminations of the Traction Power Substation positive feeders at disconnect switches and the contact wire interface with the light rail vehicle pantograph, and:

a. This section covers the general requirements of the OCS for the Project.

b. The work may require coordination with multiple Civil, Structural, and Track contractors.

c. The Contractor must also coordinate with Sound Transit, other agencies, localities, and authorities having jurisdiction regarding the work.

d. Work under the Contract includes detailed OCS design, materials procurement, installation, removal, return, disposal, salvage, scrapping, testing and commissioning of OCS equipment in accordance with the Contract Documents.

e. The OCS Contract Drawings, Specifications, and Sound Transit Light Rail Design Criteria provide information regarding this project and criteria for the Contractor to develop their OCS Design Package to completion, and install and test the Contractor's products. The Contractor must provide necessary engineering to ensure that the installed OCS meets the requirements of these Specifications and referenced Documents and Drawings.

f. The Contractor must prepare a Contractor's OCS Design Package with detailed information required for the OCS installation. The Contractor must perform engineering and prepare designs that must detail the use of the Contractor's products and construction methods to achieve the required OCS installation.

g. The equipment to be procured and installed must include poles and pole grounding, pole I.D. signs and markers, head and down guys, cantilevers, tunnel attachments, head spans, cross spans, conductors, conductor rail, feeders, jumpers, terminations, conductor tensioning devices, sectioning equipment, disconnect switches, surge arresters, contact wire-crossing assemblies, electrification warning signage and other overhead contact system associated components as shown in the Contract Documents.

h. OCS conductors must be energized at a nominal 1500 volts DC, and must be double insulated. A minimum of two levels of electrical insulation must be provided between the contact wire and a line pole or other grounded structure.

2. This section covers requirements for the tie-in of the OCS associated with the Project interface to the existing Link Light Rail Line.

   a. Construction work must interface with the termination of the existing Light Rail Line. The existing OCS equipment must be available for on-going revenue train operations on a daily basis. Closure of existing mainline tracks must be restricted to non-operating hours and periods specifically set for construction.

   b. Planning the staging of these portions of the work must be fully coordinated with Sound Transit Operations prior to any OCS tie-in work. The Contractor must coordinate with the civil work and trackwork contractors to ensure that the OCS powering the existing system will perform as specified. New installations must be tested at the end of each phase of trackwork installation, and prior to any OCS wiring entering revenue service.

3. This section covers the general requirements of OCS installations requiring attachment to structures.

   a. Coordination with WSDOT is required prior to any OCS work on a WSDOT structure.

   b. Coordination with Special Inspectors is required at structures where the owner of the structure requires Special Inspection.

   c. At bridge structures crossing over and under the route, the Contractor must make field measurements, then design, manufacture and install site-specific equipment.

   d. Locate rebar in structures prior to installing anchors.

   e. Observe safety requirements for working in tunnels, under bridges, on bridges, and at all other structures.

1.02 REFERENCES

A. This Section incorporates by reference the latest revisions of the following documents:

1. American National Standards Institute/American Welding Society (ANSI/AWS).

2. American Railway Engineering and Maintenance-of-Way Association (AREMA):

   a. AREMA (Chapter 33 – Railway Electrification).

3. American Society of Mechanical Engineers (ASME).

4. American Society for Testing and Materials (ASTM).

5. Institute of Electrical and Electronics Engineers (IEEE).

6. National Electrical Contractors Association (NECA).

7. National Electrical Manufacturers Association (NEMA).

8. National Electrical Safety Code (NESC).

9. Society for Protective Coatings (SSPC).

10. Washington State Department of Transportation (WSDOT).

11. International Electrical Testing Association (NETA).

12. European Standard (EN) 50119 – Railway applications – Fixed installations – Electric traction overhead lines.

1.03 SUBMITTALS

A. Submit:

1. The following General OCS items must be submitted. Other OCS submittal requirements must be as stated elsewhere in the Contract Documents:

a. OCS detail design documentation verifying the methods and materials used in installation must be submitted:

1) Calculations must include but not be limited to the following items:

a) Structural calculations for cantilever assembly and other similar support structures. Include verification that support structures can safely carry worst-case operating and non-operating loads and proposed conductor pre-stress tension used during installation.

b) Cantilever framing methodology and calculations.

c) Hanger calculations including those for spans containing variances due to contact wire and track grade, additional equipment, or conditions.

d) Sample calculations to verify computer calculations.

e) Calculation of worst case torsional forces on strain or stick insulators.

f) Calculations verifying the adequacy of installation rigging, including temporary or staging supports.

2. Drawings bearing the seal of a Professional Engineer registered in the State of Washington and qualified by experience must be submitted if any design changes are made to the following items. The Engineer sealing these drawings must have personally supervised the preparation of the Contractor's OCS Design Package:

a. Master Overlap Chart: Reference the single line diagram showing the entire route relative to track alignment and civil features and include the following information:

1) Labels for each tension length.

2) Labels for each wire run number.

3) Labels and locations for each termination type.

4) Labels and locations for each mid-point anchor.

5) Locations of over bridges, under bridges, grade crossings, and stations.

b. OCS Layout Plan & Schedule Drawings: Include the following information:

1) Stationing of poles, portals, and tunnel supports.

2) Structure reference numbers for poles, portals, and tunnel supports.

3) Assembly allocations of poles, portals, and tunnel supports.

4) Stagger.

5) Contact wire height.

6) Messenger wire height.

7) Termination height.

8) Span length.

9) Structure offset for poles, portals, and tunnel supports.

10) Assembly allocations.

11) Section insulator types and locations.

12) Contact wire bridges.

13) Jumpers, feeders, pole mounted switches, and surge arresters.

14) Foundation schedule for at-grade poles.

c. Technical Sheets: Include the following information for all OCS styles proposed (SCAT, LPSCAT, LPSCFT, SCWAT and SCWFT):

1) Design data.

2) Design parameters.

3) Conductor characteristics.

4) Clearance envelope.

5) Temperature conditions.

6) Conductor tensions.

7) Vertical, wind, and radial loads.

8) Hanger lengths.

9) Pantograph security.

10) Permissible mid span offset.

11) Maximum spans and staggers on tangent and curved track.

12) Vertical clearance from overhead conductors.

13) Wind blow off data.

d. General Arrangement Drawings: Show required relationship between multiple spans of wiring and multiple structures for the following configurations:

1) Typical tension length for tunnel, aerial structures, and open route.

2) Overlap types, including insulated overlaps, uninsulated overlaps, overlaps with feeders, and overlaps with disconnect switches.

3) Termination types.

4) Crossover types.

5) Midpoint types.

e. Typical Structures and Spans Drawings: Show typical spans and the relationships between various OCS assemblies needed for those span types, including the following:

1) Tunnel supports.

2) Center and side poles.

3) Feeder poles.

4) Poles with pole mounted disconnect switches.

5) Cross-span structures.

6) Standard, insulated overlap, and un-insulated overlap spans.

7) Crossover spans and structures.

8) Termination spans and structures.

9) Anchor structures including fixed terminated, mid-point, and balance weight/constant-tension spring anchors.

f. The Bill of Materials List (BOM) for each assembly and component in the Contract Drawings are representative only. As such, the Contractor's BOMs must include the following:

1) Contractor number.

2) Supplier number.

3) Provision for Sound Transit's stores number.

4) Other data required for procurement of materials used in the construction of parts of the electrification system.

5) Cross-reference to related drawings and the BOMs.

6) Generic description or specification.

7) Brand name, where applicable.

8) Manufacturer's part number.

9) Original manufacturer or supplier, including address, telephone number, and contact person.

10) Notation on parts that are custom manufactured only upon request.

g. Constant-Tension Spring Terminations: The following must be submitted with the 60 percent design package:

1) Assembly Drawings.

2) General Arrangements.

3) Site specific assembly allocations with unit sizes on OCS layout plan and schedule drawings.

4) Structure Erection Diagrams showing site specific termination heights, mounting orientation, and bracket heights. Designer must ensure proper drainage based on mounting orientation and location of weep holes.

1.04 QUALITY ASSURANCE

A. Regulatory requirements must be as follows:

1. Comply with current federal, state and local requirements.

2. Comply with codes and regulations consistent with best industry practices of OCS fabrication and installation, including but not limited to, AISC, ASTM, AWS, IEEE, NEC, and NESC.

3. Conform to the standards as stated elsewhere in the Contract Documents.

B. Qualifications:

1. General installation qualification requirements are as follows:

a. Installation personnel must meet the following licensing and certification requirements:

1) All work specified in this must be performed by workers skilled and experienced in the installation of OCS systems.

2) Field welding must be performed by qualified, certified, welders who make only those welds for which they have been qualified in accordance with AWS D1.1. Records of welder qualification tests must be made available for review upon request from Sound Transit.

3) Personnel installing constant-tension spring terminations and associated wire runs must be certified by the constant-tension spring termination manufacturer.

b. OCS Installation Supervisor qualification requirements are as follows:

1) An OCS Installation Supervisor must be appointed to supervise the complete OCS installation, field testing, and commissioning of the OCS equipment provided under this Contract.

2) The OCS Installation Supervisor must have a minimum 10 years of experience as a superintendent or general foreman in charge of OCS installations.

3) The OCS Installation Supervisor must not be the same person designated to be the Traction Power Installation Supervisor.

4) The OCS Installation Supervisor must be trained and qualified for installation by the OCS equipment manufacturer.

c. OCS Installation Crew Foreman qualifications must meet the following:

1) A foreman must be appointed for each crew not exceeding six OCS installers or where crews work independently.

2) The foreman must have a minimum 10 years of experience in the installation of OCS and demonstrated experience as foreman of OCS installations or similar overhead line work.

d. OCS Installer qualifications must meet the following:

1) OCS Installers must be qualified by experience and training to perform the specified work, and must be outside linesmen who are employees of a Washington licensed electrical Contractor.

2) Journeyman Linemen must have completed a State of Washington or federally approved Outside Line Construction and Maintenance apprenticeship program of 6000 hours of on-the-job training.

2. Personnel performing nondestructive testing must meet the following requirements:

a. Personnel must be certified by the American Society for Nondestructive Testing:

1) Only personnel certified for NDT Level I and working under a NDT Level II person or persons certified for NDT Level II may perform nondestructive testing.

3. Work specified in this Section must be performed by Washington State unlimited licensed electricians working for an Electrical Contractor licensed by the State of Washington, skilled and experienced in the installation of the particular products specified in this Section, except as follows:

a. Welding must be done by qualified, certified welders who make only those welds for which they have been qualified in accordance with AWS D1.1, ASME BPVC, Section IX, or other approved qualifying procedures.

b. Records of welder qualification tests must be made available for review upon Resident Engineer's request.

4. Manufacturer Qualifications:

a. The manufacturers of the OCS materials, components, and assemblies must meet the following qualifications:

1) Original equipment manufacturer (OEM) of OCS components must be regularly engaged in the manufacture of such components.

2) OEM must have at least 5 years of experience in successfully providing OCS products.

3) OEM must certify that products are suitable for the application for which they are proposed for the work.

b. Welder Qualification requirements must be as follows, and as stated elsewhere in the Contract Documents:

1) Welding must be done by qualified, certified welders who make only those welds for which they have been qualified in accordance with AWS D1.1, ASME BPVC, Section IX, or other approved qualifying procedures.

2) Records of welder qualification tests must be made available for review upon Resident Engineer's request.

1.05 DELIVERY, STORAGE AND HANDLING

A. Deliver materials, components, assemblies, and equipment to job site in unbroken packages, reels, or other forms of containers. Package insulators to prevent damage during transport and installation.

B. Ship wire, wire rope, and cable on suitable reels. Each reel must have a strong, weatherproof tag securely fastened to it giving physical and mechanical properties as well as material type designation, Standard designation, and name and mark of manufacturer.

PART 2 - PRODUCTS

2.01 PERFORMANCE/DESIGN REQUIREMENTS

A. General performance requirements are as follows:

1. Provide electrification equipment proven in similar railroad, rail transit, or heavy industrial service and make use of this experience to prepare a suitable and proven design for this application.

2. Each component, subassembly and assembly provided in this Contract must be of a proven design with a minimum history of 5 years successful operation at the time of Contract award in similar railroad or rail transit service applications.

3. Integrate OCS elements, such that specified requirements are achieved without conflict or error within or between specified elements, and between the OCS and other Systems and Civil components.

4. Life cycle requirements are as follows:

a. The Traction Electrification System expected service life must be 30 years in continuous service, 24 hours a day, 365 days a year.

b. Use off-the-shelf service-proven equipment and hardware to achieve this useful life.

c. Provide replacement spare parts that are functionally and physically interchangeable for each product class.

B. All OCS design criteria and selected parameters must comply with Sound Transit Light Rail Design Criteria as summarized in the following.

C. OCS configurations must comply with the following:

1. Simple Catenary Auto Tensioned (SCAT) must comply with the following:

1) Open-Route Main Line Auto-Tensioned Simple Catenary:

a) Install on the mainline track outside of tunnels in open route.

b. The range of auto tensioning is from 5 degrees F to 130 degrees F.

c. SCAT must be single 350 kcmil contact wire, suspended from a 500 kcmil messenger wire by hangers.

d. Conductors must be tensioned with a balance weight, or constant-tension spring termination, and fixed termination at opposite ends of each tension length. Midpoint terminations may also be used where feasible. Tension conductors according to charts provided in the Contract Drawings.

e. SCAT must maintain a normal system height of 4 feet unless dictated otherwise in the Contract Drawings.

f. Tension must be demonstrated from the ground to remain constant over the specified temperature range and environmental conditions.

2. Low Profile Simple Catenary Auto Tensioned LPSCAT must comply with the following:

1) Open-Route Main Line Low Profile Auto-Tensioned Simple Catenary:

a) Install on the mainline track at low clearance overhead bridges in open route.

b. The range of auto tensioning is from 5 degrees F to 130 degrees F.

c. LPSCAT must be single 350 kcmil contact wire, suspended from a 500 kcmil messenger wire by hangers.

d. Conductors must be tensioned according to charts provided in the Contract Drawings with balance weights or a constant-tension spring terminations.

e. LPSCAT must have a normal system height of 1 foot 3 inches unless dictated otherwise in the Contract Drawings.

f. Tension must be demonstrated from the ground to remain constant over the specified temperature range and environmental conditions.

3. SWFT – Single Wire Fixed Terminated (variable tension):

a. Location: Install in Storage Yards and Operations and Maintenance Facilities.

b. Configuration: Single 350 kcmil contact wire.

c. Tensioning: Conductors must be fixed terminated with variable tension. Tension conductors according to tensioning charts provided in Contract Drawings.

4. Low Profile Simple Catenary Fixed Terminated (LPSCFT, variable tension) must comply with the following:

1) Low Profile Fixed-Terminated Simple Catenary:

a) LPSCFT must be installed on the mainline track in tunnel sections and in low clearance areas as shown in the Contract Documents. At termination locations, if required, the messenger wire must terminate to avoid overhead obstructions and the contact wire must extend beyond the messenger wire termination.

b. LPSCFT must be single 350 kcmil contact wire, suspended from a 500 kcmil messenger wire by hangers.

c. Conductors must be fixed terminated with variable tension. Tension conductors according to tensioning charts provided in the Contract Drawings.

d. LPSCFT must maintain a normal system height of 1 foot 3 inches unless dictated otherwise in the Contract Drawings.

5. Tunnel Conductor Rail (CR) and the corresponding requirements, must be as stated elsewhere in the Contract Documents.

D. The ambient temperatures considered for design must be as follows:

1. The range of temperatures in tunnels is listed below:

a. Maximum temperature is 100 degrees F.

b. Normal temperature is 60 degrees F.

c. Minimum temperature is 40 degrees F.

2. The range of temperatures in open route areas is listed below:

a. Maximum temperature is 107 degrees F.

b. Normal temperature is 60 degrees F.

c. Minimum temperature is 0 degrees F.

E. Ice loading conditions to be considered for design must be as follows:

1. In tunnels, ice loading is not required for consideration, but must be considered for un-supported spans entering/exiting tunnel.

2. In open route, the following ice loading must be considered:

a. Radial ice loading (operating with 40 mph wind) must be 1/2 - inch on MW, 1/4 -inch on CW.

b. Radial ice loading (non-operating) must be 1/ 2 – inch on MW, 1/ 2 - inch on CW.

F. The design wind loads must be as follows:

1. Wind loads in tunnels are listed below:

a. Maximum wind speed for structural design must be 55 mph.

b. Maximum wind speed for train operations must be 55 mph.

2. Wind loads for open route areas are listed below:

a. Maximum wind speed for structural design must be 70 mph.

b. Maximum wind speed for train operations must be 55 mph.

G. Electrical clearance requirements must be as follows:

1. Minimum Static Clearance must be 5 inches.

2. Minimum Passing Clearance must be 3 inches.

3. Erected supports, brackets, cables, and other installed equipment must comply with the LRV and pantograph clearance envelope as indicated in the Contract Drawings.

H. Contact Wire Heights, as referenced to top of high rail level of individual NB and SB tracks at a specified support location, must be as follows:

1. Exclusive Right-of-Way at grade or Elevated Trackway must be a minimum of 15 feet.

2. In-Street running must be a minimum of 20 feet, 6 inches. Attachment heights may need increased to meet NESC minimum of 20 feet over roadway at worst case sag.

3. Road and street grade crossings must be a minimum of 20 feet, 6 inches. Attachment heights may need increased to meet NESC minimum of 20 feet over roadway at worst case sag.

4. Railroad crossings must be a minimum of 22 feet, 6 inches.

5. New tunnels must be 13 feet, 10 inches.

6. Existing tunnels must be 13 feet.

I. Factors of safety under operating and non-operating conditions for OCS design must be as follows:

1. Conductors and wires must meet the factors of safety listed below:

a. Minimum factor of safety under operating conditions must be 2.0.

b. Minimum factor of safety under non-operating conditions must be 1.6.

2. Hardware must meet the factors of safety listed below:

a. Minimum factor of safety for slippage or breakage under operating conditions must be 2.5.

b. Minimum factor of safety for slippage or breakage under non-operating conditions must be 2.0.

3. The permitted wear of the contact wire is 30 percent of its original cross sectional area. The safety factors stated above apply to the contact wire when worn.

J. Contact wire gradients and changes in contact wire gradient must be as follows:

1. The maximum constant gradient must be 1 percent.

2. The maximum change in gradient must be 0.5 percent.

K. Pantograph security must meet the following requirements:

1. The minimum pantograph security must be 6-inches.

2. The pantograph uplift allowance must be as follows:

a. In tunnels the uplift must allow for 1-1/2 inches of mechanical passing clearance.

b. In open route the uplift must allow for 3 inches of mechanical passing clearance.

c. The pantograph clearance envelope must include an additional 4 inches electrical passing clearance to the pantograph head.

L. The permissible mid span offset must be as follows:

1. Maximum 12 inches or as dictated by the Technical Sheets.

2. Installation tolerance must be 1 inch.

M. Contact wire radial loads must be as follows:

1. Cantilever load requirements must be as shown in the Contract Drawings.

2. Pull off assemblies must only be used for steady arm pull off loadings in excess of 200 pounds at any temperature or wind condition.

3. Maximum contact wire deviation at a single contact wire swivel clamp must be 7 degrees. At registrations requiring contact wire deviation angles greater than 7 degrees, a second contact swivel clamp must be required.

N. The heel settings must be as follows:

1. Calculate steady arm heel settings, the vertical distance from contact wire level to the swivel point of the steady arm, as a resultant of vertical and radial loads present at each registration point.

2. Minimum steady arm heel setting must be 1 inch.

3. Install heel point of steady arm outside of the pantograph clearance envelope.

O. The pantograph clearance envelope requirements are as follows:

1. For pantograph envelope and related clearance requirements, see OCS Contract Drawings.

2. The installed OCS, including the steady arm in the uplifted position, must not intrude into the pantograph mechanical clearance envelope for the applicable

contact wire height, allowing for uplift of the contact wire described as described below.

3. The pantograph electrical clearance envelope to live OCS equipment must be used where OCS fittings are insulated from ground by at least one level of system rated insulation and are not electrically connected to other OCS circuits. For other cases the pantograph clearance envelope for grounded structures and equipment must be used.

4. For OCS test purposes, lift the pantograph 3 inches on open track and 1-1/2 inches in the tunnel from installed contact wire height to verify passing clearance of steady arms.

5. All OCS assemblies and structures must meet the specified vehicle dynamic clearance envelope.

P. Tolerances requirements are as follows:

1. The change in span length due to a change in structure stationing may not result in exceeding the maximum span, as shown in the Contract Documents.

2. Tolerance requirements for OCS Installation are provided elsewhere in these Specifications.

Q. The nominal OCS voltage must be 1500 Vdc.

R. Electrical Insulation requirements are as follows:

1. Rate each level of insulation to be compatible with the system insulation class.

2. At OCS supports, provide a minimum of 2 levels of electrical insulation between bare live conductors and a grounded structure:

a. Provide first level of insulation at contact wire clamp and the messenger wire support clamp.

b. Provide second level of insulation adjacent to the support structure.

c. In headspan wires, cross span wires and span guys locate insulators in accordance with the requirements as shown in the Contract Drawings.

d. Examine sectionalizing diagrams and assembly allocations for additional inter-track isolation requirements.

3. At contact wire and messenger wire anchor/terminating spans, provide 2 strain insulators separated by a minimum distance as indicated in the Contract Drawings:

a. Locate one level of insulation in the anchor span approximately 4 feet from the projected superelevated center line of track, and one level between 3 feet and 5 feet from anchor attachments. All catenary support and termination assemblies, including head spans, cross spans and pull off assemblies, must be double insulated.

4. At spans with backbones and pull-off bridles, locate strain insulators 5 feet from the poles and locate the second level at the contact wire clamp and in the messenger pull-off wire.

5. At pull-offs from poles locate one level adjacent to the pole and the second at the contact wire clamp. For two-track pull-offs locate additional insulation between tracks if required.

6. At OCS in open track areas the arrangement of primary and secondary insulation must be installed such that a minimum of 4 feet 0 inches separates an energized component from a grounded component. This requirement must not apply in tunnels nor conductor rail installations.

S. Headspans must be designed with maximum sag approximately equal to length of head span divided by 8.

T. Aesthetics must be considered when determining assemblies and components in passenger stations. Assemblies and components must be low profile, and well blended to immediate surrounding structures in order to minimize the visual impact in passenger stations.

2.02 MATERIALS AND EQUIPMENT

A. General:

1. Material must be new and free from damage or wear, suitable for the use intended and of the manufacturer's latest standard design.

2. Materials and equipment provided must meet the dimensions as shown on the Contract Drawings, or as required by site specific measurements.

3. Provided materials and equipment must be standard products of manufacturers regularly engaged in the production of such material and equipment.

4. Where 2 or more units of the same class of material or equipment are required, provide products of a single manufacturer.

5. Similar component parts of different larger assemblies must not be required to be the products of the same manufacturer.

6. Discontinued materials or products must not be permitted.

7. Each type of material and equipment must be of the same manufacturer and quality throughout the Work.

B. Listed and labeled equipment and material must meet the following requirements:

1. Provide evidence of equipment labels and listed documentation for all materials, components, and assemblies.

2. Materials that are not listed or labeled require approval by the Resident Engineer prior to use.

3. Products which have not been tested or certified for the use intended must not be used when equivalent listed or labeled materials are available.

4. The label or listing will be acceptable as sufficient evidence that the materials and equipment conform to the specified standards.

5. Electrical equipment and material not listed or labeled must be furnished with a Field Evaluation label provided by a Testing Laboratory approved by the Washington State Department of Labor and Industries (L&I), and certifying that the equipment conforms to the requirements of UL and IEEE or ANSI.

6. This product evaluation may be performed in the factory or on-site as approved by L&I.

7. A request for permission to perform a Field Evaluation in the factory or onsite must be submitted to L&I for approval.

C. Material and equipment must be designed to ensure satisfactory operation and life in the environmental conditions that exist where the material or equipment is installed.

D. Dissimilar material connection requirements are as follows:

1. Not permitted at electrical connections or connections requiring disassembly for maintenance or for removal and replacement of equipment.

2. Not permitted except at permanent connections.

3. Provide suitable electrochemical isolation.

4. Isolation treatments must be permanent and not require maintenance or replacement for the life of the equipment or installation.

2.03 FINISHES

A. Galvanizing requirements are as follows:

1. Wherever “galvanized” is called out, the material must be “hot-dip galvanized” and coated in accordance with ASTM A123 or A153.

2. Wherever materials are called out as “hot-dip galvanized” or “galvanized”, the coating is intended to be applied in addition to normal manufacturer’s finish.

3. Materials or products specified which are not readily available in the specified hot-dip finish, must be “custom” hot-dip galvanized after manufacture by an independent galvanizer.

4. Where finishes are called out as galvanized and the specified product cannot be either manufactured with a hot-dip finish, or cannot be hot-dip galvanized after manufacture, the specified product must be furnished with a finish that will perform equal to hot-dip galvanizing, and as approved by the Resident Engineer.

PART 3 - EXECUTION

3.01 EXAMINATION

A. The contractor must field verify the location, offset, elevation and foundation types including the anchor rod, ferrule, or insert pattern prior to final fabrication and installation of poles, support structures, guys and hardware.

B. All dimensions, details and elevations of existing items must be field verified by the contractor prior to the fabrication of OCS structures and other associated fixtures or appurtenances.

3.02 OCS INSTALLATION

A. Installation of the OCS must be in accordance with the requirements of the specifications, contract documents, applicable national and local codes, and industry best practices.

B. Structure offsets, including poles and attachments, must be measured from centerline of track to centerline of structure at track level. At locations where the centerline of the structure differs from the centerline of anchor bolts the structure offsets refer to the centerline of the anchor bolt group.

C. For all areas the outbound outside and center foundations reference the outbound track and the inbound outside foundations reference the inbound track, where the outbound track has increasing stationing and the inbound track has decreasing stationing.

D. Offsets and staggers for all tracks must be oriented when viewing increasing station.

E. Loadings indicated on assembly drawings are minimum requirements. The contractor must determine the actual loading ranges for the hardware and assemblies being supplied. Alternative assemblies and configurations for the OCS are acceptable subject to approval by the Resident Engineer.

F. The Bills of Material for OCS assemblies as provided in the Contract Documents contain major components in a typical configuration. The contractor must provide additional components as required to complete the assemblies, including site-specific modifications where necessary and approved by the authority.

G. The Contractor must size the components in the OCS assemblies to meet the required loadings in conjunction with the configuration requirements of the OCS manufacturer's components within the assembly.

H. Pole brackets have been optimized for back-to-back arrangements where practical. The contractor must adjust the brackets as required dependent on the hardware and assemblies supplied, support configuration, pole type and size, and aesthetics.

I. Termination heights provided on the OCS layout plans are for initial installation only. The contractor must adjust all termination heights as required to accommodate the hardware being furnished, final contact wire profile, track profile, and actual field dimensions.

J. The messenger wire must be positioned directly above the contact wire at all times, with the exception of split termination spans.

K. The conductor heights in the OCS layout plans reference the mean top of rail level of the track projected along the superelevated centerline of the track at each support location.

L. The stagger in the OCS layout plans reference the superelevated centerline of the track normal to the plane between the rails of that track.

M. The system height of catenary is measured from the bottom of the contact wire to the centerline of the messenger wire at the support.

N. The contractor must field verify each span between vertical support locations prior to determining the required number of hangers and their lengths.

O. Hangers installed at any point of any span when the system height is less than 10 inches must be "V" configuration.

P. Conductor rail stagger, support attachments, span lengths, and termination arrangements must be reviewed and modified as required by the manufacturer and supplier of the conductor rail system components.

Q. OCS poles must be raked as necessary to ensure they are plumb when all static loads are applied. Contractor must provide the rake values in the as-built drawings.

R. All structure offsets must satisfy minimum clearance requirements for vehicles and pantographs, fully allowing for track curvature and the superelevation as designed at that location.

S. OCS installation must comply with the requirements as stated elsewhere in the Contract Documents.

T. Constant-tension spring termination assemblies must be corrosion-resistant. Install assemblies according to manufacturer instructions. Provide continuous verification from ground level of constant tension on a full-length co-located contact wire and messenger wire under all specified temperature and environmental conditions.

3.03 DEMOLITION, REMOVALS, RETURN, SALVAGE, AND SCRAP

A. Requirements for demolition, removal, return, salvage, and scrap of OCS materials and equipment must be as stated elsewhere in the Contract Documents.

3.04 CAPITAL SPARE PARTS AND MAINTENANCE EQUIPMENT

A. Requirements for capital spare parts and maintenance equipment must be as stated elsewhere in the Contract Documents.

3.05 SPECIAL MAINTENANCE TOOLS

A. Requirements for special maintenance tools must be as stated elsewhere in the Contract Documents.

3.06 TESTING AND COMMISSIONING

A. Requirements for testing and commissioning must be as stated elsewhere in the Contract Documents.

END OF SECTION

SECTION 34 23 05

OVERHEAD CONTACT SYSTEM POLE PAINTING

PART 1 - GENERAL

1.01 SUMMARY

A. Section includes:

1. Requirements for preparing surfaces, furnishing, and applying abrasion resistant coating systems for the exterior exposed surfaces of galvanized steel OCS poles shown on the Issued for Construction Drawings or specified herein.

2. Field touch-up of damaged paint surfaces.

B. Work Not Included:

1. Unless otherwise indicated, painting is not required on surfaces of permanently concealed areas, pre-finished items, finished metal surfaces, operating parts and labels such as Underwriters Laboratories, Factory Mutual, or other code required labels or equipment name, identification, performance rating or nomenclature plates. Areas concealed by decorative bases and medallions must not be considered as permanently concealed.

2. OCS pole bands, brackets, OCS cantilevers, insulators, OCS switches, brackets, operating handles, support wires, fittings, bare conductors, insulated conductors, anchor bolts, nuts, washers, or any other item that is not specifically part of the OCS pole or OCS structure assembly must not be painted.

1.02 REFERENCES

A. This Section incorporates by reference the latest revisions of the following documents:

1. ASTM B117 - Standard Practice for Operating Salt Spray (Fog) Apparatus.

2. ASTM D3363 - Standard Test Method for Film Hardness by Pencil Test.

3. ASTM D4060 - Standard Test Method for Abrasion Resistance of Organic Coatings by the Taber Abraser.

4. ASTM D4541 - Standard Test Method for Pull-Off Strength of Coatings Using Portable Adhesion Testers.

5. ASTM D6386 – Standard Practice for Preparation of Zinc (Hot-Dip Galvanized) Coated Iron and Steel Products and Hardware Surfaces for Painting.

6. SSPC SP-1 – The Society for Protective Coatings, Surface Preparation Specification No. 1 Solvent Cleaning.

7. SSPC SP-10 - The Society for Protective Coatings, Surface Preparation Specification No. 10 Near-White Blast Cleaning.

1.03 SUBMITTALS

A. Submit:

1. Product Data: For each paint system specified, including primers:

    a. Submit the manufacturer's technical information including label analysis and instructions for handling, storage and application of each material proposed for use.

    b. Submit a list of each material and cross-reference the specific coating, finish system and application. Identify each material by the manufacturer's catalog number and general classification.

    c. Submit material safety data sheets for all abrasion resistant coating primers, intermediate coats, finish coats, cleaning agents and thinners.

2. Product List: Identify products to be applied and state whether materials are to be applied in the shop or in the field.

3. Application Process: For each paint application process:

    a. Submit the applicator’s processes for preparing the hot-dip galvanized surfaces, applying the primer coats, intermediate coats, and finish coats, using cleaning agents and thinners, and repairing defects.

4. Field Touch-Up Process:

    a. Submit processes for touching up damaged paint surfaces in the field.

B. Transmit:

1. Samples:

    a. Samples of each color and material to be applied with texture to simulate actual conditions on representative samples of the actual substrate.

    b. Stepped samples, defining each separate coat, including primers. Use representative colors when preparing samples for review. Resubmit until the required sheen, color and texture is achieved.

    c. A list of material and application for each coat of each sample. Label each sample as to location and application.

    d. Six inch-square samples of each color and finish on each type of metal (galvanized-coated steel, aluminum-zinc-alloy-coated steel, bare steel, etc.) for Resident Engineer's review of color and texture

2. Certificates: Submit certification by the manufacturer that the products supplied comply with Washington regulations controlling use of Volatile Organic Compounds (VOCs).

3. Qualifications Statements: Submit qualification data for manufacturers and applicators to demonstrate their capabilities and experience.

1.04 QUALITY ASSURANCE

A. Qualifications:

1. Applicator Qualifications: Engage an experienced applicator that has completed painting system applications similar in material and extent to those indicated for the Project and that have resulted in a construction record of successful in-service performance.

a. Include a list of completed projects with project names, addresses, names of Engineers, Architects and Owners and associated phone numbers, plus other information specified where identical products have been applied.

B. Consult with the galvanizer and the paint manufacturer before applying a post-treatment to galvanized steel that is to be painted.

C. Single Source Responsibility: Provide primers and undercoat paint produced by the same manufacturer as the finish coats; in all cases where the Contractor has control of primers and undercoat paints applied to items to be finish painted. Paint materials not otherwise specified must be products of one manufacturer regularly producing materials of types specified.

D. Materials must be applied and reduced only as specified by the paint manufacturer's printed instructions. Where the manufacturer has made additional requirements, apparently in conflict with these Specifications, allow the Resident Engineer to review the additional requirements before proceeding.

E. Field Samples / Mock-Ups:

1. Request inspection by the Resident Engineer of the first finished item of each color scheme required as a field sample of selected colors, finish, texture and gloss under illumination equal to that expected at acceptance.

2. Acceptable field samples will be used to establish the Project standard.

F. Coordination:

1. Review sections in which other coatings are provided to ensure compatibility of the total systems for various substrates. On request, furnish information on the characteristics of specified finish materials to ensure compatible primers.

2. Coordinate with the galvanizer to ensure that painting process is compatible with the galvanizing process.

3. Notify the Resident Engineer of problems anticipated using the coatings specified over substrates primed under other sections.

1.05 DELIVERY, STORAGE AND HANDLING

A. Delivery and Acceptance Requirements: Deliver materials to the jobsite in the manufacturer's original, unopened packages and containers bearing the manufacturer's name and label and the following information:

1. The Product name or title of the material.

2. The Product description (generic classification or binder type) and the Manufacturer's name.

3. The Manufacturer's stock number and date of manufacture.

4. The contents by volume, of pigment and vehicle constituents.

5. Thinning instructions.

6. Application instructions.

7. Color name and number.

8. Handling Instructions and precautions.

B. Storage Requirements:

1. Store materials not in use in tightly covered containers in a well-ventilated area at a minimum ambient temperature of 45 degrees F and according to manufacturer's written instructions. Protect from freezing. Maintain containers used in storage in a clean condition, free of foreign materials and residue.

2. Keep storage area neat and orderly. Remove oily and paint-soiled rags, contaminated paint and waste daily. Take necessary measures to ensure that the workers and Work areas are protected from fire and health hazards resulting from the handling, mixing and application.

3. The Contractor must store all flammable paints and solvents in accordance with Federal, State, and Local requirements.

C. Handling Requirements:

1. All painted poles and structured must be handled and stored by the Contractor to prevent damage to the paint and coatings.

2. Painted poles and structures must be delivered to installation site in a finished condition. Any damage requiring field touch-up must conform to these Specifications and the paint manufacturer's written instructions.

1.06 PROJECT CONDITIONS

A. Environmental Conditions:

1. Perform all painting processes at a facility that ensures environmental conditions will not adversely affect the quality of the final product.

2. Comply with paint manufacturer's requirement concerning environmental conditions under which the paint systems may be applied.

3. Apply coatings only when the temperature of the surfaces to be painted and the surrounding air temperatures are between 45 degrees F and 95 degrees F.

4. Do not apply coatings in the following circumstances:

a. Snow, rain, fog, or mist.

b. When the relative humidity exceeds 85 percent.

c. At temperatures less than five degrees F above the dew point.

d. To damp or wet surfaces.

e. Where dust of foreign contaminants are blowing in the air.

f. Against manufacturer's requirements for the application.

5. The Contractor must ensure adequate ventilation during interior painting.

PART 2 - PRODUCTS

2.01 MANUFACTURERS

A. Manufacturer List: Subject to compliance with specification requirements, provide best quality products from the following:

1. Sherwin-Williams.

2. Tnemec.

3. Or approved equal by the EOR.

2.02 MATERIALS

A. Abrasion Resistant Coating:

1. Abrasion resistant coating system is a two-component, pigmented, aliphatic, polyurethane coating.

2. Material Compatibility: Provide primers, finish coat materials and related materials that are compatible with one another and the substrates indicated under conditions of service and application as demonstrated by the manufacturer based on testing and field experience. Factory applied primers must be compatible with intermediate and finish coat materials.

3. Material Quality: Provide the highest grade of the various coatings as regularly manufactured by acceptable coating manufacturers. Materials not displaying manufacturer's identification as a best-grade product will not be acceptable.

4. Colors: Provide custom colors of the finish coat to match colors specified in the Contract Documents.

B. Galvanized Steel:

1. Prepare surface per SSPC SP-1 Solvent Cleaning.

2. Provide the manufacturer's specified factory-formulated primer that is compatible with the substrate and finish materials indicated.

3. Manufacturers/Products: Subject to compliance with requirements, products that may be incorporated in the Work include, but are not limited to:

a. DTM Wash Primer B71Y1 by Sherwin Williams, 0.7 to 1.3 mils dry film thickness.

b. Series N69 Hi-Build Epoxoline II by Tnemec, 4-6 mils dry film thickness.

c. Or approved equal by the EOR.

C. Intermediate Coat Materials:

1. Provide the manufacturer's specified factory-formulated intermediate coat for galvanized steel. Verify that it is compatible with the substrate and primer and the finish materials indicated:

a. Manufacturers/Products: Subject to compliance with requirements, intermediate coat materials that may be incorporated in the Work include, but are not limited to:

1) Recoatable Epoxy Primer B67 Series by Sherwin-Williams, 4.0 mils minimum dry film thickness.

2) Series N69 Hi-Build Epoxoline II by Tnemec, 4-6 mils dry film thickness.

3) Or approved equal by the EOR.

2. Touch-Up Primer: Provide the manufacturer's specified factory-formulated touch-up primer that is compatible with the substrate, primer, intermediate coat and the finish materials indicated as noted in this Section.

D. Finish Coat Materials

1. Provide one coat of manufacturer's specified factory-formulated Pigmented, Aliphatic, Polyurethane finish-coat materials that are compatible with the substrate and base coat materials:

a. Physical Properties of Topcoat:

1) Abrasion Resistance; ASTM D4060, Taber CS-17 wheel, 1000 cycles, 1-kg weight: maximum 155-mg loss.

2) Pencil Hardness; ASTM D3363: B.

3) Salt Fog Resistance; ASTM B117, 1000 hours: "Excellent".

4) Elcometer Adhesion; ASTM D4541, 700 psi (average of 3 pulls) minimum.

5) Provide system specified by manufacturer for future field repair by untrained applicators employed by the Owner.

2. Manufacturers/Products: Subject to compliance with requirements, finish coat materials that may be incorporated in the Work include, but are not limited to:

a. High Solids Polyurethane, B65 Series by Sherwin-Williams, 3.0 to 5.0 mils minimum dry film thickness.

b. Series 73 Endura-Shield by Tnemec, 2.0 to 5.0 mils minimum dry film thickness.

c. Or approved equal by the EOR.

2.03 SHOP FINISHING

A. Shop Finishing: Abrasion resistant coatings may be applied in the shop before delivery to site.

PART 3 - EXECUTION

3.01 EXAMINATION

A. Verification of Conditions: Examine substrates and conditions under which coatings will be applied for compliance with requirements on applying coatings. Surfaces to receive coatings must be thoroughly dry before coatings are applied and meet coating manufacturer's requirements:

1. Do not proceed with coating application until unsatisfactory conditions have been corrected.

2. Start of application will be construed as the applicator's acceptance of surfaces within that particular area.

3.02 PREPARATION

A. Cleaning: Before applying coatings or other surface treatments, clean substrates of substances that could impair bond of the various coatings. Remove oil and grease prior to cleaning. Schedule cleaning and coating application so dust and other contaminates from the cleaning process will not fall on wet, newly coated surfaces.

B. Surface Preparation:

1. Clean and prepare surfaces to be coated according to the manufacturer's instructions for each particular substrate condition and as specified, in conjunction with the galvanizer's post-treatment requirements.

   a. Provide barrier coats over incompatible primers or remove and reprime. Notify the Resident Engineer in writing of problems anticipated when using the specified finish-coat material with substrates primed under other sections or other contracts.

   b. Clean galvanized metal surfaces; remove oil, grease, dirt, loose scale and other foreign substances. Use solvents that comply with the requirements of the Society for Protective Coatings.

   c. Do not damage galvanized surfaces.

C. Material Preparation: Carefully mix and prepare materials according to the coating manufacturer's directions:

1. Maintain containers used in mixing and application of coatings according to the manufacturer's directions.

2. Stir materials before applying to produce a mixture of uniform density; stir as required during application. Do not stir surface film into the material. Remove films and, if necessary, strain the coating material before using.

3. Use only the type of thinners approved by the manufacturer and only within specified limits.

3.03 APPLICATION

A. Application – General:

1. Apply abrasion resistant coatings by brush, roller, spray or other applicators except as specified otherwise herein, according to the manufacturer's directions. Use brushes best suited for the material being applied. Use rollers of carpet, velvet back, or high-pile sheep's wool as specified by the manufacturer for the material and texture required.

2. Do not apply coatings over dirt, rust, scale, grease, moisture, scuffed surfaces, or conditions detrimental to forming a durable coating film.

3. Provide finish coats compatible with the primers used.

4. The number of coats and film thickness required is the same regardless of the application method. Do not apply succeeding coats until the previous coat has cured as specified by the manufacturer. Where sanding is required, according to the manufacturer's directions, sand between applications to produce a smooth, even surface.

5. When undercoats or other conditions show through the final coat, apply additional coats until the cured film has a uniform coating finish, color and appearance. Give

special attention to edges, corners, crevices, welds, exposed fasteners and similar surfaces to ensure that they receive a dry film thickness equivalent to that of flat surfaces.

B. Tinting: Tint each undercoat a lighter shade to facilitate identifying each coat where multiple coats of the same material are to be applied. Tint undercoats to match the color of the finish coat but provide sufficient difference in shade of undercoats to distinguish each separate coat.

C. Scheduling Coating Application:

1. Apply first coat to surfaces that have been cleaned, pretreated, or otherwise prepared for coating as soon as practical after preparation and before subsequent surface deterioration.

2. Allow sufficient drying time between successive coats. Do not recoat until the coating has dried so it feels firm and does not deform or feel sticky under moderate thumb pressure and where applying another coat does not cause the undercoat to lift or lose adhesion or until manufacturer's requirements are met for recoating.

D. Application Procedures:

1. Apply coatings by brush, roller, spray or other applicators according to the manufacturer's directions when not specifically specified herein.

2. Apply primers and first coats by spray.

E. Minimum Coating Thickness: Apply each material no thinner than the manufacturer's specified spreading rate. Provide total dry film thickness of the entire system as specified by the manufacturer or specified herein.

F. Prime Coats:

1. Before applying intermediate coats, apply a prime coat of material, as specified by the manufacturer, to the material required to be coated or finished that has not been prime-coated under this or other sections.

2. Recoat primed and sealed substrates where there is evidence of suction spots or unsealed areas in the first coat to ensure a finish coat with no burn-through or other defects caused by insufficient sealing.

G. Brush Application: Brush-out and work brush coats into surfaces in an even film. Eliminate cloudiness, spotting, holidays, laps, brush marks, runs, sags, ropiness, or other surface imperfections. Neatly draw color breaks.

H. Mechanical Applications: Use mechanical methods to apply coating when permitted by the manufacturer's requirements and governing regulations.

1. Wherever using spray application, apply each coat to provide the equivalent hiding of brush-applied coats. Do not double-back with spray equipment, building-up film thickness of two coats in one pass, unless specified by the manufacturer.

2. Electrostatic application will be acceptable.

3. Apply without cloudiness, spotting, laps, runs, sags, orange peel texture, or other surface imperfections.

I. Attach Labels to Parts Upon Completion of Painting.

J. Completed Work: Match ST approved samples for color, texture and coverage. Remove, refinish, or recoat Work not complying with specified requirements.

3.04 FIELD QUALITY CONTROL

A. Field Tests and Inspections: The Resident Engineer reserves the right to invoke the following test procedure at any time and as often as the Resident Engineer deems necessary during coating operations:

1. Sound Transit will engage the services of an independent testing agency to sample the coating being used. Samples of material delivered to Project Site as well as applied, will be taken, identified, sealed and certified in the presence of the Contractor.

2. The testing agency will perform appropriate tests for the following characteristics as required by the Resident Engineer:

a. Quantitative Materials Analysis.

b. Absorption.

c. Accelerated Weathering.

d. Accelerated Yellowness.

e. Adhesion.

f. Color Retention.

g. Alkali and Mildew Resistance.

h. Abrasion Resistance.

i. Apparent Reflectivity.

j. Washability.

k. Dry Opacity.

l. Recoating.

m. Skinning.

n. Dry Film Thickness.

B. Non-Conforming Work: If results show materials being used do not comply with requirements, the Contractor may be directed to stop Work and remove non-complying materials, pay for testing, recoat surfaces coated with rejected materials, or remove rejected materials from previously coated surfaces.

3.05 CLEANING

A. At the end of each workday, remove rubbish, empty cans, rags and other discarded materials from the site.

B. After completing Work, clean spattered surfaces. Remove spattered coatings by washing, scraping, or other methods. Do not scratch or damage adjacent finished surfaces. Any surfaces or items unable to be cleaned of coatings completely or that are damaged, must be replaced or repaired at no cost to the Owner at the direction of the Resident Engineer.

3.06 PROTECTION

A. Protect Work of other trades, whether being coated or not, against damage from the coating operation. Correct damage by cleaning, repairing, replacing and recoating, as acceptable to the Resident Engineer. Leave in an undamaged condition.

B. At completion of other trades' construction activities, touch up and restore damaged or defaced coated surfaces.

3.07 COLOR SCHEDULE

A. Colors must match the manufacturer's paint numbers listed in the Contract Documents, or as otherwise provided by Sound Transit.

B. Paint Schedule: Painted coatings must be applied to galvanized steel OCS poles as listed in the Contract Documents, or as otherwise provided by Sound Transit. A sample table of relevant information to include in the Paint Schedule is shown in Sample Table 1 below.

Table 1: Sample Table of Paint Schedule

Drawing Number Prefix	**Location**	**Stationing Start**	**Stationing End**	**Pole Type**	**Color and Reference**

END OF SECTION

SECTION 34 23 13

OVERHEAD CONTACT SYSTEM STEEL POLES

PART 1 - GENERAL

1.01 SUMMARY

A. Section includes:

1. Requirements for the design, fabrication, furnishing, delivery, installation and testing of Overhead Contact System (OCS) galvanized steel poles.

1.02 REFERENCES

A. This Section incorporates by reference the latest revisions of the following documents:

1. American Galvanizers Association (AGA).

2. American Institute of Steel Construction:

a. AISC Manual of Steel Construction.

b. AISC 303 - Code of Standard Practice for Steel Buildings and Bridges.

c. AISC 360 - Specification for Structural Steel for Buildings.

3. American Society for Non-Destructive Testing.

4. American Society for Testing and Materials (ASTM):

a. ASTM A36 - Standard Specification for Carbon Structural Steel.

b. ASTM A53 - Standard Specifications for Pipe, Steel, Black and Hot-Dipped, Zinc-Coated, Welded and Seamless.

c. ASTM A123 - Standard Specification for Zinc (Hot-Dip Galvanized) Coatings on Iron and Steel Products.

d. ASTM A143 - Standard Practice for Safeguarding Against Embrittlement of Hot-Dip Galvanized Structural Steel Products and Procedure for Detecting Embrittlement.

e. ASTM A153 - Standard Specification for Zinc Coating (Hot-Dip) on Iron and Steel Hardware.

f. ASTM A370 - Standard Test Methods and Definitions for Mechanical Testing of Steel Products.

g. ASTM A384 - Standard Practice for Safeguarding Against Warpage and Distortion During Hot-Dip Galvanizing of Steel Assemblies.

h. ASTM A500 – Standard Specification for Cold-Formed Welded and Seamless Carbon Steel Structural Tubing in Rounds and Shapes.

i. ASTM A572 - Standard Specification for High-Strength Low-Alloy Columbium-Vanadium Structural Steel.

j. ASTM A595 - Standard Specification for Steel Tubes, Low-Carbon or High-Strength Low-Alloy, Tapered for Structural Use.

k. ASTM A780 - Standard Practice for Repair of Damaged and Uncoated Areas of Hot-Dip Galvanized Coatings.

l. ASTM A992 – Standard Specification for Structural Steel Shapes.

m. ASTM E23 – Standard Test Methods for Notched Bar Impact Testing of Metallic Materials.

n. ASTM E709 - Standard Guide for Magnetic Particle Testing.

o. ASTM F593 - Standard Specification for Stainless Steel Bolts, Hex Cap Screws, and Studs.

5. American Welding Society (AWS):

a. AWS D1.1 - Structural Welding Code – Steel.

6. Institute of Electrical and Electronics Engineers (IEEE):

a. IEEE Std 1630 – IEEE Standard for Supporting Structures for Overhead Contact Systems for Transit Systems.

1.03 SUBMITTALS

A. Submit:

1. Shop Drawings:

a. Submit shop drawings for review giving complete information necessary for fabrication of the OCS poles.

b. Indicate fittings, holes and accessories.

c. Allocate the locations, sizes and types of welds.

2. Material Testing and Evaluation Reports:

a. Certified copies of the laboratory test reports within five days after completion of each test or series of tests.

3. Welding Procedures:

a. Submit the following:

1) Specifications for welding procedures in accordance with AWS D1.1.

2) Certificates of qualifications of welders, welding operators, and tackers in accordance with AWS D1.1.

3) Certificates of qualifications of welding inspectors in accordance with AWS D1.1.

4. Proof of Compliance:

a. Before commencing fabrication, submit for review the manufacturer's certificates of compliance, or certified laboratory test reports

demonstrating compliance of raw materials and fabricated products with Article 2.02, herein.

5. Schedule:

   a. Schedule of shop drawing submittals, certified laboratory test reports, test dates, test locations, and test reports.

6. Methods:

   a. Methods of manufacture and installation including personnel and equipment.

   b. In areas adjacent to Washington State Highways, other roadways, or structures, submit diagrams illustrating the erection methods and clearances.

7. Pole Deflection Test Procedure and Test Report:

   a. Submit Pole Deflection Test Procedure with the following information.

      1) Step by step procedure for the test, as described in IEEE Std 1630.

      2) A table including pole type, load value, height of load applications, and calculated deflection for each pole type.

      3) List of equipment and measuring devices, including calibration documentation.

      4) Description of rigid mounting base.

      5) Test Procedure must be signed and sealed by a qualified Professional Engineer registered in the State of Washington.

   b. Submit Pole Deflection Test Report with the following information.

      1) Submit the information listed above in the Pole Deflection Test Procedure.

      2) Include the actual measured loads and deflections from the test data.

      3) Include passed or failed, based on the requirements in IEEE Std 1630.

      4) Test Report must be signed and sealed by a qualified Professional Engineer registered in the State of Washington.

8. Galvanizing Repair:

   a. Submit product data for field repair of damaged galvanized surfaces.

   b. Submit procedure for performing field repair of damaged galvanized surfaces.

1.04 QUALITY ASSURANCE

A. Installation must comply with State, Federal, and Local requirements.

B. Testing and Inspection:

1. Material Testing:

a. Contractor must provide chemical compositions and mechanical properties of materials specified herein as proof of compliance, either by obtaining the manufacturer's certificates of compliance or by laboratory testing at a facility approved by the Resident Engineer.

2. Weld Testing:

a. Weld Testing Requirements:

1) Weld testing must conform to the requirements listed in IEEE Std 1630, as summarized below.

2) Provide the services of an AWS Certified Welding Inspector to:

a) Inspect fabrication operations.

b) Inspect welding procedures.

c) Inspect welds made by welding personnel.

3) Perform weld testing on not less than 5 percent of each type of OCS pole selected at random by Resident Engineer.

4) Test poles by ultrasonic, radiographic, and magnetic particle methods as specified below:

a) Equipment, procedures, and personnel for weld testing and test reports to conform to the requirements of AWS D1.1.

b) Ultrasonic testing conforming to the requirements of AWS D1.1. Perform ultrasonic test on the complete penetration welds between the pole shaft and pole base and on circumferential welds in the pole shaft.

c) Radiographic testing must be performed on all seam welds of tubular poles.

d) Magnetic particle testing conforming to the requirements of ASTM E709. Perform magnetic particle test on other welds, including longitudinal seam welds and welds at handholes, cable outlets and other welded on attachments and reinforcements.

5) For each tested pole that is found to be unacceptable, perform weld testing on a further sample of two poles, selected at random by the Resident Engineer.

6) Results of weld testing to be deemed acceptable or unacceptable in accordance with AWS D1.1.

7) Repair welds found to be unacceptable in accordance with AWS D1.1 and retest.

3. Impact Testing:

a. Test structural steel materials for base plates and pole shafts for impact toughness in accordance with the Charpy Vnotch test in conformance with ASTM A370 and ASTM E23.

b. The minimum energy value to be 15 feet-pounds at zero degrees Fahrenheit.

4. Galvanizing Testing:

a. Inspect galvanized items for conformance with the requirements of the following ASTM Specifications as applicable:

1) Galvanizing Compliance: ASTM A123 or ASTM A153.

2) Embrittlement: ASTM A143.

3) Distortion: ASTM A384.

5. Pole Deflection Testing:

a. Demonstrate to the Resident Engineer the acceptable deflection values of each type of pole furnished under this Contract.

1) Demonstration must be in the form a factory test, performed at the place of manufacture or other suitable location.

b. Testing must be nondestructive and at a place and time agreed by the Resident Engineer.

c. Conduct the test on a rigid foundation that resists translation and rotation in any axis.

d. The test must be performed as described in IEEE Std 1630.

PART 2 - PRODUCTS

2.01 DESIGN

A. Multi-Ply Tubular Poles:

1. Where multi-ply tubular poles are proposed by the pole Manufacturer, the Manufacturer must perform the necessary design and calculations to ensure that the pole deflection must meet the following criteria.

a. The deflection at the top of the pole must not exceed L/40 when a load equal to the allowable bending moment divided by the height of the pole is applied at the top of the pole.

b. The deflection at a height of 20 feet must not exceed 1 inch under the worst case live loading, where live load is defined as the difference between the radial loads of the worst case operating conditions minus the standard installation conditions, applied at an assumed height of 23 feet.

2.02 MATERIALS

A. Tubular Poles:

1. Fabricate tubular pole shafts, handholes, reinforcements, and covers from one of the following structural steel material types:

    a. ASTM A572, Grade 50, 55, 60 or 65.

    b. ASTM A595, Grades A or B.

2. Vandal/Tamper Resistant Hardware:

    a. Hardware and fastening devices including screws, nuts and bolts must be vandal/tamper resistant and must prevent unauthorized tampering and/or disassembly of completed pole installations.

3. Base Plates:

    a. Fabricate base plates from structural steel conforming to ASTM A572 Grade 50.

    b. The minimum yield stress capacity of the base plate steel must meet or exceed the yield stress capacity of the pole shaft steel.

4. Pole Caps:

    a. Provide pole caps on tubular poles fabricated from galvanized pressed steel, fitted with three tamper resistant stainless steel set screws conforming to ASTM F593.

5. Feeder Spouts:

    a. Provide feeder spouts fabricated from standard steel pipe conforming to ASTM A53, Type S, Grades A or B.

6. Pole Penetrations:

    a. Holes in tubular poles and support structures must be pre-drilled prior to hot-dip galvanization. No field drilling is allowed without explicit approval by the Resident Engineer.

7. Handhole Cover Screws:

    a. Provide tamper-resistant stainless steel Allen set screw type handhole cover screws conforming to ASTM F593.

    b. Tapped holes in the handhole frames may be furnished in lieu of nuts welded to the handhole frames.

8. Feeder Spout Box Screws:

    a. Provide tamper-resistant hex head stainless steel cap screw type feeder spout box screws conforming to ASTM F593.

B. Wide Flange Poles:

1. Pole Shafts:

    a. Fabricate wide flange pole shafts from structural steel conforming to ASTM A992 Grade 50.

    b. OCS poles must have no spliced joints.

2. Base Plates:

a. Fabricate base plates from structural steel conforming to ASTM A572 Grade 50.

b. The minimum yield stress capacity of the base plate steel must meet or exceed the yield stress capacity of the pole shaft steel.

3. Galvanizing Coatings:

a. Hot-dip galvanizing must be in accordance with ASTM A123 for fabricated pole assemblies.

C. Galvanizing Repair:

1. Repair according to ASTM A780.

2. Manufacturers/Products:

a. Galvaloy by Metalloy Products Co., Hardhat 2185 by Rust-Oleum, ZRC by ZRC Chemical Products, or approved equal.

D. OCS Pole Paint:

1. OCS pole painting must be in accordance with Section 34 23 05 - Overhead Contact System Pole Painting.

2.03 FABRICATION

A. General:

1. Fabricate poles, fittings and accessories to the dimensions indicated in the Contract Documents.

B. Methods and Tolerances:

1. Fabricate poles, fittings and accessories by methods and within tolerances conforming to the tolerances listed in IEEE Std 1630, except as indicated in the Contract Documents.

2. Tubular Pole Diameter:

a. Pole diameter must be within 1/8 inch of the design diameter.

b. Round poles must be within 1/16 inch of perfect round.

3. Tubular Pole Wall Thickness: Pole wall thickness must be within plus 10 percent or minus 5 percent of the design thickness.

4. Tubular Pole Taper:

a. Pole taper must be constant for the length of the pole with maximum taper of 0.14 inches per foot as indicated in the Contract Documents.

5. Wide Flange Pole Dimensions:

a. Dimensional tolerances must conform to AISC 303, unless specified otherwise below.

6. Straightness:

   a. Straightness must be within 1/8 inch per 5 feet of pole length.

7. Length:

   a. Pole length must be plus 2 inches and minus zero inches.

8. Base Plates:

   a. Bolt Circle: Plus 1/16 inch minus 0 inch.

   b. Hole Diameter: Plus 1/16 inch minus 0 inch.

   c. Location of Holes: Plus 1/16 inch in each direction.

   d. Bolt hole diameter in baseplate must be 1/4 - inch greater than anchor bolt diameter.

C. Welding Procedures:

1. Welding procedures, welders, welding operations and tackers must conform to AWS D1.1.

2. Repair welds found to be unacceptable in conformance with the provisions of AWS D1.1.

D. Surface Grinding:

1. Before galvanizing, smooth needle chip and grind welds to eliminate surface cracks.

2. Deep grind marks must be removed, eliminate sharp edges and burrs, and any excessive pitting.

E. Drain/Relief Holes:

1. Drill the inner plies of multiple-ply poles to provide drain/relief holes for use during galvanizing.

2. Arrange holes so that the strength of the pole is not reduced.

F. Galvanizing:

1. After fabrication, hot-dip galvanize the poles, fittings, and accessories inside and out in conformance with ASTM A123 or ASTM A153.

2. Galvanize pole fabrications for their entire length at one time in a single hot-dip galvanizing bath.

3. Galvanizing by successive dipping of partial pole lengths will not be permitted.

4. Conform to ASTM A143 to prevent embrittlement of the steel.

G. Straightness:

1. After galvanizing, when the poles have cooled to ambient temperature, straighten the poles as necessary to conform to the requirements indicated in the Contract Documents.

2. Straightening methods must not require heating of the poles and must not damage the zinc coating.

3. Galvanizing must be performed by a company that is a member of the AGA.

H. Pole Identification:

1. Stamp on top of base plate or weld a manufacturers' pole identification sign to each pole immediately after fabrication while making sure the Pole ID information can be clearly seen after application of galvanizing and paint treatment including:

a. Pole type.

b. Manufacturer.

c. Date of manufacture.

I. Painting:

1. Refer to Section 34 23 05 - Overhead Contact System Pole Painting.

PART 3 - EXECUTION

3.01 DELIVERY, STORAGE AND HANDLING

A. Deliver poles complete with associated fittings and accessories, properly packed and protected against damage and loss of parts.

B. Protect from damage during storage, handling, and moving from the storage facility to the installation site.

C. Handle and transport poles in a manner to preclude damage to either the structural steel, paint, or the zinc coating.

3.02 INSTALLATION

A. General:

1. Install poles as indicated in the Contract Documents.

2. Ensure equipment and personnel maintain a 10 foot minimum distance from energized OCS wires, or any other types of overhead wires.

3. Contractor must arrange any required power de-energization with Sound Transit and King County Metro.

4. Installation must comply with State, Federal, and Local requirements.

5. Do not set the poles less than seven days after foundations are installed and do not load to the design requirements less than 30 days after foundations are installed.

B. Preparation of Foundations:

1. Steel poles are anchor base type for installation on foundations constructed with projecting anchor bolts.

2. Before setting poles, clean anchor bolts and inspect the pole foundations for structural soundness, correct location, and correct foundation type. Report any deficiencies to Resident Engineer for disposition thereof.

C. Pole Rake:

1. Rake anchor base steel poles by means of double nuts and washers, with two nuts and washer above, and with one nut and washer below the base plate. The final rake of the pole must be defined as the rake of the pole when all OCS wiring, cantilevers, and any other items attached to the OCS pole have been installed in their final state. The final rake of the pole must ensure that the pole is within 1 inch of plumb, when measured at the top of pole, under standard installation conditions.

D. Handhole Locations:

1. Set poles with handholes on the opposite side of approaching vehicle traffic under normal operating conditions, except on center poles, where they will face in the direction of decreased stationing.

E. Fittings:

1. Furnish and install fittings required for the specific installation, including, but not limited to, the following items:

a. Handholes with cover, gasket and tamper-resistant screws.

b. Feeder spouts and caps.

c. Pole caps (special pole caps as required).

d. Grounding studs.

F. Feeder Poles:

1. Fit feeder poles with cable supports and terminating bushing at the cable entrance hubs of the weatherproof, compression seal type.

2. Install feeder poles with the spout facing the track where the feeder cables will be connected.

G. Grounding and Bonding:

1. Bond steel poles to the foundation ground as indicated elsewhere in the Contract Documents.

2. Repair damage to the steel pole base plate galvanized coating in accordance with Article 3.03, herein.

H. Additional Requirements:

1. Exercise care during erection of tubular and wide flange poles to prevent damage or disfigurement. Repair imperfections as necessary to restore poles to a condition acceptable to the Resident Engineer.

2. Touch-up damage to galvanized and paint coatings as directed by the manufacturer's written directions.

3.03 TOUCH UP

A. Immediately after erection, remove shop coating from field welds and bolted connections.

B. Brush coat areas of damaged galvanizing with galvanizing compound applied in accordance with manufacturer's instructions.

END OF SECTION

SECTION 34 23 26

OVERHEAD CONTACT SYSTEM ASSEMBLIES, COMPONENTS, AND CONDUCTORS

PART 1 - GENERAL

1.01 SUMMARY

A. Section includes:

1. Requirements for the procurement, delivery and installation of assemblies, components and fittings that make up the OCS:

a. Work includes furnishing and installing of OCS Systems in accordance with ST approved OCS Layout Drawings, Bill of Materials, and OCS Drawings contained in the Contract Drawings and Specifications, and with Contractor's detailed design.

b. Equipment to be provided may include OCS pole and portal brackets, conductors, surge arresters, conductor rail, cantilevers, headspans, cross spans, hangers, feeders, jumpers, terminations, conductor tensioning devices, sectioning equipment, tunnel supports, anchor attachments, head and down guys, and other overhead contact system components.

c. OCS equipment is energized at a nominal 1500 Vdc and must be double insulated.

d. OCS equipment must be manufactured, prefabricated, installed and tested using industry standards and best practices.

1.02 REFERENCES

A. This Section incorporates by reference the latest revisions of the following documents:

1. American Institute of Steel Construction (AISC):

a. AISC 303 - Code of Standard Practice for Steel Buildings and Bridges.

b. AISC 326 - Detailing for Steel Construction.

2. American National Standards Institute (ANSI):

a. ANSI/NEMA C29.1 - Test Methods for Electrical Power Insulators including Addenda C29.1a and C29.2a.

b. ANSI Z55.1 – Gray Finishes for Industrial Apparatus and Equipment.

3. American Society of Mechanical Engineers (ASME):

a. ASME B18.2.1 – Square, Hex, Heavy Hex, and Askew Head Bolts and Hex, Heavy Hex, Hex Flange, Lobed Head, and Lag Screws (inch series).

4. American Society for Testing and Materials (ASTM):

a. ASTM A6/A6M - Standard Specifications for General Requirements for Rolled Structural Steel Bars, Plates, Shapes, and Sheet Piling.

b. ASTM A29/A29M - Standard Specification for General Requirements for Steel Bars, Carbon and Alloy, Hot-Wrought.

c. ASTM A36/A36M - Standard Specification for Carbon Structural Steel.

d. ASTM A47/A47M - Standard Specification for Ferritic M3alleable Iron Castings.

e. ASTM A48/A48M - Standard Specification for Gray Iron Castings.

f. ASTM A53/A53M - Standard Specification for Pipe, Steel Black and Hot-Dipped, Zinc-Coated Welded and Seamless.

g. ASTM A108 - Standard Specification for Steel Bars, Carbon and Alloy, Cold Finished.

h. ASTM A123/A123M - Standard Specification for Zinc (Hot-Dip Galvanized) Coatings on Iron and Steel Products.

i. ASTM A143/A143M - Standard Practice for Safeguarding Against Embrittlement of Hot-Dip Galvanized Structural Steel Products and Procedure for Detecting Embrittlement.

j. ASTM A153/A153M - Standard Specification for Zinc Coating (Hot-Dip) on Iron and Steel Hardware.

k. ASTM A240/A240M - Standard Specification for Chromium and Chromium-Nickel Stainless Steel Plate Sheet, Sheet, and Strip for Pressure Vessels and for General Applications.

l. ASTM A283/A283M - Standard Specification for Low and Intermediate Tensile Strength Carbon Steel Plates.

m. ASTM A368 – Standard Specification for Stainless Steel Wire Strand.

n. ASTM A384/A384M - Standard Practice for Safeguarding Against Warpage and Distortion During Hot-Dip Galvanizing of Steel Assemblies.

o. ASTM A385/A385M - Standard Practice for Providing High Quality Zinc Coatings (Hot-Dip).

p. ASTM A492 – Standard Specification for Stainless Steel Wire Rope.

q. ASTM A500/A500M – Standard Specification for Cold-Formed Welded and Seamless Carbon Steel Structural Tubing in Round Shapes.

r. ASTM A501/A501M - Standard Specification for Hot-Formed Welded and Seamless Carbon Steel Structural Tubing.

s. ASTM A555 – Standard Specification for General Requirements for Stainless Steel Wire and Wire Rods.

t. ASTM A563/A563M - Standard Specification for Carbon and Alloy Steel Nuts.

u. ASTM A568/A568M - Standard Specification for Steel, Sheet, Carbon, Structural, and High-Strength, Low Alloy, Hot-Rolled and Cold-Rolled, General Requirements for;

v. ASTM A572/A572M – Standard Specification for High-Strength Low-Alloy Columbium-Vanadium Structural Steel.

w. ASTM A575 - Standard Specification for Steel Bars, Carbon, Merchant Quality, M-Grades.

x. ASTM A576 - Standard Specification for Steel Bars, Carbon, Hot-Wrought, Special Quality.

y. ASTM A580 – Standard Specification for Stainless Steel Wire.

z. ASTM A1011/A1011M - Standard Specification for Steel, Sheet and Strip, Hot-Rolled, Carbon, Structural, High-Strength Low-Alloy, High-Strength Low-Alloy with Improved Formability, and Ultra-High Strength.

aa. ASTM A1085/A1085M – Standard Specification for Cold-Formed Welded Carbon Steel Hollow Structural Sections (HSS).

bb. ASTM B1- Standard Specification for Hard-Drawn Copper Wire.

cc. ASTM B3 - Standard Specification for Soft or Annealed Copper Wire.

dd. ASTM B6 - Standard Specification for Zinc.

ee. ASTM B8 - Standard Specification for Concentric-Lay-Stranded Copper Conductors, Hard, Medium-Hard, or Soft.

ff. ASTM B47 - Standard Specification for Copper Trolley Wire.

gg. ASTM B173 - Standard Specification for Rope-Lay-Stranded Copper Conductors having Concentric-Stranded Members, for Electrical Conductors.

hh. ASTM B230/B230M – Standard Specification for Aluminum 1350-H19 Wire for Electrical Purposes.

ii. ASTM B231/B231M – Standard Specification for Concentric-Lay-Stranded Aluminum 1350 Conductors.

jj. ASTM B232/B232M – Standard Specification for Concentric-Lay-Stranded Aluminum Conductors, Coated-Steel Reinforced (ACSR).

kk. ASTM B341/B341M – Standard Specification for Aluminum-Coated (Aluminized) Steel Core Wire for Aluminum Conductors, Steel Reinforced (ACSR/AZ).

ll. ASTM B498/B498M – Standard Specification for Zinc-Coated (Galvanized) Steel Core Wire for Use in Overhead Electrical Conductors.

mm. ASTM B500/B500M – Standard Specification for Metallic Coated Aluminum Clad Stranded Steel Core for Use in Overhead Electrical Conductors.

nn. ASTM D116 - Standard Test Methods for Vitrified Ceramic Materials for Electrical Applications.

oo. ASTM F3125/F3125M - Standard Specification for Structural Bolts, Steel, Heat Treated, 120/105 ksi Minimum Tensile Strength.

5. American Welding Society (AWS):

a. AWS D1.1/D1.1M - Structural Welding Code, Steel.

6. Research Council on Structural Connections (RCSC):

a. Specification for Structural Joints Using ASTM A325 or ASTM A490 Bolts.

7. Federal Specifications (FS):

a. FF-S-92 - Screw, Machine: Slotted, Cross-Recessed or Hexagon Head.

b. FF-W-84 - Washer, Lock (Spring).

c. FF-W-92 - Washer, Flat (Plain).

d. FF-B-561- Bolts, (Screw), Lag.

8. European Standard (EN):

a. CENELEC EN 50119 - Railway applications - Fixed installations - Electric traction overhead contact lines.

1.03 SUBMITTALS

A. Submit:

1. Product Data: Complete manufacturer's data including certification that product has been designed, manufactured, inspected and tested in accordance with the referenced standards and Specifications:

a. Stainless Steel Wire Rope:

1) Size.

2) Type.

3) Material.

4) Number of and diameter of individual wires.

5) Overall diameter.

6) Cross-section area.

7) Weight per foot.

8) Rated breaking load.

9) Manufacturer’s data and usage procedures and tools used to grip wire during installation.

b. Contact Wire:

1) Size.

2) Type.

3) Material.

4) Overall diameter.

5) Cross-section area.

6) Weight per foot.

7) Ampacity.

8) Rated breaking load.

9) Manufacturer's data and usage procedures and tools used to grip wire during stringing and when held under tension.

c. Messenger Wire:

1) Size.

2) Type.

3) Material.

4) Number of and diameter of individual wires.

5) Overall diameter.

6) Cross-section area.

7) Weight per foot.

8) Rated breaking load.

9) Ampacity.

10) Manufacturer's data and usage procedures and tools used to grip wire during stringing and when held under tension.

d. Jumper Wire:

1) Size.

2) Type.

3) Material.

4) Number of and diameter of individual wires.

5) Overall diameter.

6) Cross-section area.

7) Weight per foot.

8) Rated breaking load.

9) Ampacity.

e. Insulators and insulated cable:

1) Voltage rating.

2) Insulation Level.

3) Creepage Distance.

4) Withstand Voltage, Wet and Dry.

5) Storage and handling instructions.

6) UV rating.

7) Rated breaking load.

f. Section Insulators: Provide data to show that insulator material is resistant to ultra-violet radiation and electrical tracking:

1) Voltage rating.

2) Insulation Level.

3) Creepage Distance.

4) Withstand Voltage, Wet and Dry.

5) Storage and handling instructions.

6) UV rating.

7) Rated breaking load.

g. Warning signs and attachment:

1) Dimensions.

2) Material.

3) Attachment method.

h. Brackets:

1) Dimensions.

2) Materials.

i. Cantilever Pipe:

1) Dimensions.

2) Materials.

2. Submit other products supplied by Contractor but not specified.

3. Shop Drawings:

a. General Requirements:

1) Show details of components including load ratings, dimensions, weights and installation instructions.

2) Each shop drawing must have a bill of materials listing components with part or catalog number, descriptive text, quantity

required and unit of measure. Products to be purchased must be identified by the Contractor and quantified in the Bill of Materials. The Contractor must make allowances for wastage and breakages.

3) Components shown in Contract Drawings are generic. Provide standard assemblies and components that meet the calculated dimensional and loading requirements for approval.

4) Both assembly and component shop drawings must bear the seal of a qualified professional engineer registered in the State of Washington.

b. Assembly Shop Drawings:

1) Down Guy Anchor Plates.

2) Support Assemblies, Drop Pipes, and Drop Vertical Supports.

3) Eyebolts and Anchor Bolts.

4) Cantilevers.

5) Headspans.

6) Cross spans.

7) Span Wire and Portal Registrations.

8) Pull offs.

9) Tunnel Supports.

10) Section Insulators.

11) Feeder Connections.

12) Balance Weights.

13) Fixed Anchors.

14) Y-Terminations.

15) Constant-Tension Spring Terminations.

16) Knuckles.

17) Contact Bridges.

18) Jumpers.

19) In-Span Insulators.

20) Splices.

21) Midpoint Anchors.

22) Bridles.

23) Downguys and Headguys.

24) Hangers.

25) Brackets, Pole Bands and Pole Slings.

26) Anchor Brackets.

27) OCS Monitoring System.

28) Warning Signs and attachment method.

c. Components, Fittings, and Hardware Shop Drawings:

1) Provide a drawing for each individual component, fitting, and hardware item, and for each small assembly of components where assembly is typically supplied as one unit by OCS parts manufacturer.

2) Drawings must be organized in catalog format, bound and covered, in 8.5 by 11 (letter) size paper. The format must include:

a) Drawing index in alphabetical or numerical order.

b) Assembly to component matrix.

c) Component to assembly matrix.

d) Components grouped and tabbed by like items, (e.g. wire, turnbuckles, fittings, clamps).

e) One component per page.

d. Submit shop drawings for the fabrication and erection of assemblies of metalwork not completely substantiated by the manufacturer's data sheets. Include plan elevations at not less than 1 inch to 1 foot scale and include details of sections and connections at not less than 3 inch to 1 foot scale.

e. Drawings for temporary anchorages, guying, and electrical isolation for information prior to installation.

f. Record Documents: Full set of OCS Layout Drawings and structure cross section drawings, to show as built dimensions and details.

g. Shop Drawings must include at minimum:

1) Title block.

2) Description of component, including materials composing various parts.

3) Dimensions in English units of both metal and insulating parts.

4) Mechanical properties, including working and ultimate strengths.

5) Installation torque values.

6) Electrical properties, if used for electrical insulation.

7) Ultraviolet properties, if non-metallic material.

8) Minimum two views of the component.

9) Scale of drawing.

10) Applicable standards and references.

11) Suppliers catalog number.

12) Original equipment manufacturer's name and part number.

h. OCS site specific Structure Erection Diagrams (SED):

1) Submit SED of portals, headspans, cross spans, cantilevers, tunnel supports, constant-tension spring terminations. Fixed-anchor terminations, and down guys.

2) SED must be to scale and depict accurate dimensions and components used at each location.

3) SED drawings must include the following technical information at a minimum:

a) Wire tensions for headspans and cross spans.

b) Hanger or bridle lengths.

c) Pipe lengths.

d) Fitting setout

e) Portal and/or Pole types.

f) Offset of MW and CW support from centerline of track.

g) Stagger of contact wire

h) Height and length of support in reference to track centerline.

i) Dimensions to civil structures.

j) Anchoring method and dimensions.

k) Bracket heights

i. Cantilever tube dimension drawings.

j. Drawings for temporary anchorages, guying, and electrical isolation for information prior to installation.

k. Constant-Tension Spring Terminations:

1) Unit sizes

2) Type

3) Weight

4) Material specifications

5) Tension range

6) Temperature range

7) Rated breaking load

8) UV rating

9) Maintenance, storage and handling instructions

10) Installation procedures

11) Mounting hardware detail

12) Manufacturer's data and usage procedures and recommended special tools or equipment used to install

4. Samples:

a. One initial sample and up to a maximum of five samples of each listed components as requested by the Resident Engineer:

1) Brackets and hinges.

2) Tunnel supports.

3) Termination components.

4) Conductor clamps, including contact wire clamps.

5) Insulators.

6) Section insulators.

7) Insulated cable.

8) Castings.

9) Fittings.

10) Surge arresters.

11) OCS monitoring system components.

12) Warning Signs.

13) Other items upon request by the Resident Engineer.

5. Certificates of Compliance:

a. Insulators (including section insulators):

1) Steel analysis.

2) Hot-dip galvanizing.

3) Adhesive materials.

4) Insulator materials.

5) In-service record of proposed insulators.

6) Certified quality control procedures used in the manufacturing process.

6. Schedules:

a. Wire Schedules: List contact and messenger wire runs and include the following information:

1) Begin stationing.

2) End stationing.

3) Wire run length.

4) Reel numbers.

5) Length of wire on reel.

7. Procedures:

a. Procedures for each stage of OCS installation.

b. Procedure for pre-stressing contact wire.

c. Installation procedures for section insulators including procedures for hanger adjustment and hogging of section insulator.

d. Anchoring and installation methods for tunnel supports and tunnel anchor brackets.

e. Jumper length tables for prefabrication and installation.

f. Installation procedures and adjustment procedures where applicable for the following:

1) Insulators.

2) Brackets and Hinges.

3) Balance Weight Assemblies.

4) Constant-tension spring-termination assemblies.

5) OCS monitoring system.

g. List of construction work plans.

h. Construction work plan for each stage of OCS installation.

i. Construction work plan for tie in to existing Link system.

j. Construction work plan for work near roadways.

8. Conductor Erection Spreadsheet:

a. Submit Conductor Erection Spreadsheet template.

b. Include wire type, wire-run number and length, from-structure and to-structure, from-stationing and to-stationing, track, reel number, reel length, equivalent span, tension, date, time, conductor temperature, ambient temperature, constant-tension spring termination or balance weight set-point, dynomometer number, turnbuckle position.

c. Submit one version of the Conductor Erection Spreadsheet within 5 days after pretensioning with over-tension values and durations.

d. Submit updated version of the Conductor Erection Spreadsheet within 5 days after final termination of each conductor.

9. Qualifications Statements:

a. Personnel Qualifications: Submit qualifications and proof of experience for OCS Installation Supervisor and OCS Installation Crew Foremen for approval by the Resident Engineer prior to mobilization of installation personnel.

b. Welder Certifications and Qualifications: Submit welder certifications and qualifications as required by AWS D1.1.

10. Test and Evaluation Reports:

a. Factory Design and Production Tests: Submit certified testing reports from factory design tests and factory production tests specified in Section 34 23 69 - Overhead Contact System Testing.

1.04 QUALITY ASSURANCE

A. Manufacturer Qualifications:

1. Original equipment manufacturer (OEM) of OCS components must be regularly engaged in the manufacture of such components.

2. OEM must have at least 5 years of experience in successfully providing OCS products.

3. OEM must certify that products are suitable for the application for which they are proposed for the work.

B. General Qualifications:

1. Licensing and Certification Requirements:

a. All work specified in this must be performed by workers skilled and experienced in the installation of OCS systems.

b. Welding must be done by qualified, certified, welders who make only those welds for which they have been qualified in accordance with AWS D1.1, or other AWS approved qualifying procedures. Records of welder qualification tests must be made available for review upon request from the Resident Engineer.

2. OCS Installation Supervisor Qualifications:

a. An OCS Installation Supervisor must be appointed to supervise the complete OCS installation, field testing, and commissioning of the OCS equipment provided under this Contract.

b. The OCS Installation Supervisor must have a minimum of 10 years experience as a superintendent or general foreman in charge of OCS installations.

c. The OCS Installation Supervisor must not be the same person designated to be the Traction Power Installation Supervisor.

d. The OCS Installation Supervisor must be trained and qualified for installation by the OCS equipment manufacturer.

e. The OCS Installation Supervisor must be trained and qualified for installation by the constant-tension spring termination assembly manufacturer.

3. OCS Installation Crew Foreman Qualifications: OCS foreman must be qualified by experience and training to perform the specified work, and must be outside linemen who are employees of a Washington licensed electrical Contractor. The foreman must have at least 10 years of experience in the installation of OCS and demonstrated experience as a foreman of OCS installations or similar overhead line work.

4. OCS Installer Qualifications: OCS installers must be qualified by experience and training to perform the specified work, and must be outside linemen who are employees of a Washington licensed electrical Contractor. A Journeyman Lineman must have completed a State of Washington or federally approved Outside Line Construction and Maintenance apprenticeship program of 6000 hours of on-the-job training.

5. Personnel Performing Nondestructive Testing: American Society for Nondestructive Testing Certified NDT. Only personnel certified for NDT Level I and working under a NDT Level II person or persons certified for NDT Level II may perform nondestructive testing.

6. OCS Maintenance Personnel Training for Constant Tension Spring Terminations:

a. Contractor must provide an on-site field and office/shop training course to the ST Systems Maintenance Staff on the proper installation and maintenance practices of any constant-tension spring terminations used with a certified representative from the original equipment manufacturer. This training is required to be a combination on hands-on training and classroom education of relevant informational material.

b. Contractor must provide a training video and all manufacturer's recommended maintenance manuals and practices for constant-tension spring terminations to be used in an in-house training course for new maintenance personnel as a well as a refresher course.

C. Substitutions: If other types of materials are proposed, Contractor must, along with product description, include relevant standards and information on that material in the submittal. Substitution Procedures must be as required by the Contract.

1.05 DELIVERY, STORAGE AND HANDLING

A. Deliver materials and equipment to job site in unbroken packages, reels, or other forms of containers. Package insulators to prevent damage during transport and installation.

B. Wire and Cable: Ship wire, wire rope, and cable on suitable reels. Each reel must have a strong, weatherproof tag securely fastened to it giving physical and mechanical properties

as well as material type designation, Standard designation, and name and mark of manufacturer.

PART 2 - PRODUCTS

2.01 GENERAL MATERIAL REQUIREMENTS

A. Wire and Cable:

1. Stainless Steel Wire and Wire Rope:

a. Stainless steel wire and wire rope must be used for the following applications:

b. Dead-ends, headspan and cross span wires.

c. Pull-off assemblies.

d. Bridle wires.

e. Cantilever top ties.

f. Head guys and down guys.

g. OCS assemblies.

h. Galvanized wire and wire rope must not be used.

2. Contact Wire:

a. Solid grooved hard drawn copper, conforming to or exceeding requirements of ASTM B47.

b. Size: 350 kcmil.

c. Wire Reels:

1) Wire must be wound on reels, with wire vertical axis normal to barrel of the reel.

2) Wire must be wound evenly, tightly and with no kinks.

d. Diameter of the reel spindle must be large enough to prevent wire twist when running wire off of the reel.

3. Messenger Wire:

a. Hard drawn copper, ASTM Standard B8 and B1, class AA, bare.

b. Size: 19-strand 500 kcmil.

c. Wire Reels:

1) Wire must be wound evenly, tightly, and with no kinks.

d. Diameter of the reel spindle must be large enough to prevent wire twist when running wire off of the reel.

4. OCS Jumper Wire:

   a. In Span Jumpers: 350 kcmil stranded, annealed copper cable, ASTM B3 and B173, Class G or H, bare.

   b. Potential Equalizing Jumpers: 350 kcmil stranded, annealed copper cable; ASTM B3 and B173, Class G or H, bare.

   c. Full Current Jumpers: 350 kcmil stranded annealed copper cable; ASTM B3 and B173 Class G or H, bare.

5. Insulated Feeder Jumpers:

   Feeder cable at each location must be installed as shown on Issued for Construction Drawings. Insulated feeder cable requirements are specified in Section 34 21 28 - Traction Power DC Insulated Conductors and Cables.

6. Surge Arrestor Ground Wire:

   Surge arrestor ground wires at each location must be as shown on Issued for Construction Drawings. Insulated cable requirements are specified in Section 34 21 28 - Traction Power DC Insulated Conductors and Cables.

B. Steel:

1. Structural Steel Shapes and Plates: ASTM A36, ASTM A6, ASTM A572.

2. Steel Plate for Cold Forming: ASTM A283 Grade C and ASTM A6.

3. Hot-Rolled Steel Bars (including Bar-sized Shapes): ASTM A575 (Merchant Quality) or ASTM A576 (Special Quality), quality and grade as selected by fabricator as best suited for its use, and ASTM A29.

4. Cold-Finished Steel Bars: ASTM A108, grade as selected by fabricator as best suited for its use, and ASTM A29.

5. Steel Pipe: ASTM A53, Type E, F or S at fabricator's option, Grade A, black finish unless indicated in the Contract Documents as galvanized, or ASTM A500, or ASTM A1085.

6. Hot-Formed Rectangular Steel Tubing: ASTM A501, butt-welded, cold-finished and stress relieved, or ASTM A1085.

7. Gray Iron Castings: ASTM A48, Class 30B.

8. Malleable Iron Castings: ASTM A47, grade as selected by the fabricator as best suited for its use subject to approval by the Resident Engineer.

9. Steel Sheet for Cold-Forming: ASTM A1011, hot-rolled sheet steel of commercial quality, pickled and oiled and free of defects which would impair the work.

10. Stainless Steel Sheet Steel: ASTM A240.

11. Material for Galvanizing:

    a. Geometrically suitable for galvanizing as indicated in ASTM A384 and A385.

b. Steel materials suitable for galvanizing include structural shapes, pipe, sheet, fabrications and assemblies.

c. Chemically suitable for galvanizing.

d. Zinc for Galvanizing: Conform to ASTM B6 as indicated in ASTM A123.

12. Galvanizing Repair: Galvalloy by Metalloy Products Co., Hardhat 2185 by Rust-oleum, or ZRC by ZRC Chemical Products, or approved equal by the EOR.

C. OCS Fittings and Hardware:

1. OCS fittings and hardware must include the following items, which combined with other major items, complete the Overhead Contact System.

a. Clevis fittings.

b. Clamps.

c. Nuts, bolts, lock washers and cotter pins.

d. Terminations.

e. Cross contact assembly.

f. Dead ends.

g. Turnbuckles.

h. Wire splices and connectors.

i. Knuckle assemblies.

j. Pole bands and brackets.

k. Links and eyebolts.

l. Hanger assemblies.

m. Thimbles and wire sleeves.

n. Miscellaneous hardware items.

2. Required Characteristics:

a. Reusable: Select fittings and hardware used for the various OCS assemblies that can be reused after removal.

b. Weather Resistant: Fittings and hardware must not rust under climatic conditions experienced in the specific project location of western Washington State.

c. Easy Interface: Fittings and hardware must be designed to allow an easy interface with other components of OCS system.

d. Dimensional Standard: Components must be designed such that all fastenings and adjustments are accomplished with tools of one dimensional standard.

e. Fittings and hardware must be designed and installed in a manner which will provide a homogenous OCS hardware and assembly arrangement.

D. Fasteners and Anchorage Materials:

1. Refer to the Contract for concrete anchor requirements details.

2. Items indicated below are for minimum general conditions:

a. Bolts: ASTM A325 Grade A.

b. Nuts: ASTM A563.

c. Machine Screws: FS FF-S-92, stainless steel- or zinc-plated steel.

d. Lag Bolts: FS FF-B-561, type and grade as required

e. Washers: Carbon steel; plain, round complying with FS FF-W-92; locking, helical spring complying with FS FF-W-84.

2.02 ASSEMBLIES

A. Down Guy Anchor Plates:

1. Must be manufactured from ASTM A572 Grade 50.

2. Must be hot dipped galvanized.

B. Support Assemblies, Drop Pipes, and Drop Vertical Supports:

1. Design the support assemblies, drop pipes, and drop vertical assemblies to match the structure it is attached to.

2. Must be hot dipped galvanized.

C. Eyebolts and Anchor Bolts:

1. Refer to Contract for concrete anchor requirements details.

D. Cantilevers:

1. The type of cantilever to be installed at each location must be according to the layout plans.

2. Double insulation must be provided.

E. Headspans:

1. Provide two or more stainless steel span wires.

2. Provide double insulation between energized conductors and grounded structures as well as between catenary sections fed from different sources.

3. Provide turnbuckles that have a minimum of 6 inches of adjustment capability in each direction after installation.

F. Cross spans:

1. Provide a single stainless steel wire with double insulation. Provide cross spans and span guys on single contact wire segments and design for single and multi-track arrangements.

2. Cross span and span guy wires must be easily adjustable with turnbuckles to facilitate installation, adjustment and future maintenance and must have at least 6 inches of adjustment in each direction, after installation.

3. Single contact wire systems suspended from cross spans must use a bridle to support contact wire on either side of the suspension point.

4. Design cross spans and span guys for site specific loading conditions.

5. Provide stainless steel wire for cross spans.

G. Span Wire and Portal Registrations:

1. Must provide the required insulation levels to ensure the entire span or portal assembly is double insulated between the energized catenary and any grounded structure.

H. Pull Offs:

1. Provide wire pull-offs suitable for single and multiple track operations.

2. Provide pull-off assemblies to hold the OCS system in its correct alignment on curves.

3. Design and determine tensions and attachment heights of the pull offs.

4. Provide stainless steel wire for assemblies.

5. Design pull offs to accommodate loads at each location within specified temperature range as shown on Issued for Construction Drawings.

I. Tunnel Supports:

1. Must be designed to provide adequate clearance to other live fittings, pantographs, the dynamic vehicle envelope, and all other discipline's hardware in the tunnel.

J. Section Insulators:

1. Provide section insulators that provide smooth passage of vehicle pantograph with minimum current interruption by pantographs at running speeds up to 55 mph.

2. Bridging type section insulators must permit continuous current collection during passage of vehicle pantograph by using overlapping conductive runners as shown on Issued for Construction Drawings.

3. Non-bridging type section insulators must insure that adjacent sections of Overhead Contact System must remain electrically isolated from each other during each passage of a vehicle pantograph.

4. Section insulators must meet or exceed the following design requirements:

a. Design must be suitable for use by new pantograph carbons and by carbons with 1 inch of wear.

b. Design must ensure that electrical separation between adjacent contact sections is maintained at all times, electrically isolating one section from the other.

c. The section insulator must be designed to remain stable (dynamically and structurally) for train operations under sustained crosswinds of 55 miles per hour.

d. The section insulator must be designed to withstand crosswinds of up to 70 mph without failure, including permanent deformation.

e. Design must ensure that moving pantograph is continuously in contact with section insulator.

f. Pantographs drawing current while traversing the section insulator must not cause excessive arcing or damage to the section insulator or pantograph.

g. The design must allow for torsional forces resulting from the passage of pantographs at 20 mph combined with lateral wind loads.

h. Contact wire skids or runners must be copper or copper alloy and must provide a smooth transition from one section to another.

i. The section insulator must be fitted with arcing horns. The arcing horns must be configured to disperse an arc away from any assembly, wire or structure that may be damaged by the arc. The arcing horns must be easily replaceable.

j. The design of the section insulator must satisfy the required factors of safety listed in Section 34 23 01 - Overhead Contact System General Requirements.

K. Feeder Connections:

1. Connections to conductors must be of copper or bronze.

2. Jumper Clamps: Two bolts per clamp, or two single bolt clamps.

L. Balance Weights:

1. Must automatically regulate tension of wires.

2. Must operate freely within specified temperature range as shown on Issed for Construction Drawings.

3. The catenary system balance weight anchor assembly must operate at a nominal pulley ratio of 1:3.

4. In the event of a loss of catenary the balance weight must be equipped with a stopping mechanism that holds the weight stack from dropping all the way to the ground and damaging the foundation of the pole.

5. Bearings in the pulley(s) must be permanently sealed to prevent the ingress of moisture or other contaminants, or the loss of lubricant. Grease nipples must be provided to permit field replenishment of lubricant during maintenance.

6. The tension wheel must be cast bronze or aluminum.

7. Tolerance on weight of the complete balance weight stack must be within 3% of the required weight, but not less than the required weight.

8. All external ferrous parts must be stainless steel or hot-dip galvanized in accordance with ASTM.

9. Each tensioning device must bear the manufacturer's name or trademark and year of manufacture clearly and permanently.

M. Fixed Anchors:

1. Provide strain type termination assemblies of a straight-line design or of other design of aesthetically pleasing appearance.

2. Automatic terminations must be as shown on Issued for Construction drawings.

3. Provide cone or wedge type designs. Include turnbuckles with a minimum of 6 inches of adjustment capability in each direction after installation where required. Slip strength of the assembly must meet 100 percent of the breaking strength of the terminating conductor.

N. Y-Terminations:

1. Provide y-termination assemblies to terminate the catenary at the end of the alignment between multiple poles.

2. Design and determine the tensions and attachment heights of the y-terminations.

3. Design y-terminations to accommodate loads at each location within specified temperature range as shown on Issued for Construction Drawings.

O. Constant-Tension Spring Terminations:

1. Must automatically regulate the tension of conductors.

2. Constant-tension spring terminations must be rated for the specified application shown in the Contract Drawings.

3. Must be designed so that it will become locked in case of tension relief from the conductors.

4. All components must withstand environmental conditions and must be protected against corrosion for the specified service life of the system.

5. Location of weep holes must be adequate for proper drainage based on mounting orientation.

6. Devices must meet required safety factors for hardware and withstand forces in excess of the wires to which they are attached.

7. The vertical movement of the constant-tension spring termination throughout the temperature range must not have a negative effect on the OCS. Contractor must provide alterative orientations or hardware arrangements to ensure sag/hog at the first support is managed

P. Knuckles:

1. Must allow for differential along track movement between the catenaries.

Q. Contact Bridges:

1. Provide contact bridges for crossing of contact wires in crossovers and other areas where in running contact wires cross each other as shown on Issued for Construction layout drawings.

2. Double clamp contact bridges at each end.

3. Contact bridge rod material must be a shop straightened piece of contact wire.

R. Jumpers:

1. Connections to conductors must be of copper or bronze.

2. Jumper Clamps: Two bolts per clamp, or two single bolt clamps.

S. In-Span Insulators:

1. Runnable type insulators must be used where vertical separation between in-running and out-of-running contact wires is less than 3 inches.

2. Must be designed to accommodate the loads within the specified temperature range as shown on Issued for Construction Drawings.

T. Splices:

1. Messenger wire splices must be crimp style and designed to accommodate the loads within the specified temperature range as shown on Issued for Construction Drawings.

2. Contact wire splices must be a bolted style and designed to accommodate the loads within the specified temperature range as shown on Issued for Construction Drawings.

U. Midpoint Anchors:

1. Insulation in the midpoint anchors must be installed as shown on Issued for Construction Drawings.

2. Design and determine tensions and attachment heights of midpoint anchors.

3. Provide stainless steel wire for assemblies.

4. Design to accommodate full tension of the wire being secured. Under a broken wire scenario, the midpoint anchor must restrain the CW or MW from movement.

V. Bridles:

1. Provide wire bridles suitable for single and multiple track operations.

2. Provide bridle assemblies to hold the OCS system in its correct alignment on curves.

3. Design and determine tensions and attachment heights of overhead bridles.

4. Suitable bull-rings may be used in bridle systems to achieve correct tension distribution and accommodate the angles required. If bull-rings are not used, the fittings utilized must not cause kinking or detrimental stresses in the bridle wire.

5. Provide stainless steel wire for assemblies.

6. Design pull offs to accommodate loads at each location within specified temperature range as shown on Issued for Construction Drawings.

W. Downguys and Headguys:

1. Provide a turnbuckle for adjustment

2. must be made of stainless steel wire

3. Design downguys and headguys to accommodate loads at each location within specified temperature range as shown on Issued for Construction Drawings.

X. Hangers:

1. Hangers with bolted-type messenger and contact wire clips.

2. Typical Hanger: Minimum hanger wire diameter of 1/8 inch, stainless steel with a loop at top to pass over messenger saddle.

3. Hanger Insulation: Install insulation in typical hanger. Insulation must be rated to the requirements of Article 2.03 A.2, in this specification. Messenger saddle must be insulated and must retain hanger loop securely irrespective of rotational disposition of saddle.

4. Thimbles must be insulated with UV stabilized material that resists degradation.

5. Hangers must be allocated by hanger sets that will include all hangers for a span of a specific length.

6. Determine all hanger lengths for Simple Catenary System.

Y. Brackets, Pole Bands and Pole Slings:

1. Brackets must be clearly distinguished to be for support attachments, or other light loads.

2. All brackets must utilize hinges and pins to promote free movement of the attached OCS assembly.

3. All brackets must be hot dipped galvanized.

4. Pole bands for cantilevers on tubular poles may utilize stainless steel banding.

5. Pole slings must be made from stainless steel wire rope.

6. Manufacture steelwork for support assembly to obtain conductor design heights.

7. All bracket shop drawings must show both maximum working load and breaking loads.

Z. Anchor Brackets:

1. Anchor brackets must be clearly distinguished to be for anchor loads or for support attachments.

2. Anchor brackets comprised of framing channel must be stainless steel.

3. All manufactured steel anchor brackets must be hot dipped galvanized.

4. All anchor bracket shop drawings must show both maximum working load and breaking loads.

5. Anchor brackets must provide facilities to attach a back guy opposing the termination.

AA. Warning Signs:

1. Manufacture Warning signs, pole I.D. numbers, and information markers and materials for outdoor use. Demonstrate that no appreciable discoloration, cracking, blistering or dimensional change will occur for a period of not less than 10 years.

2. Identification signs must be fabricated of Grade 302 stainless steel and mounted as indicated.

2.03 COMPONENTS

A. Insulators:

1. Design:

a. Prepare detailed designs for each of the required insulators shown on Contract Drawings.

b. Designs must be based on performance requirements, working loads and basic dimensions and design must be subject to review by the Resident Engineer.

c. OCS equipment must be double insulated. Provide a minimum of two levels of electrical insulation between contact wire and a grounded structure.

d. Provide a minimum of 5-inch air gap between energized parts and a grounded structure.

2. Insulators Ratings:

a.	Nominal System Voltage	1500 Vdc.
b.	Maximum System Voltage	2000 Vdc.
c.	Insulation Level	4.2 kV ac rms.
d.	Creepage Distance	1.88 inch (min).
e.	60 Hz Withstand Voltage, Dry	35 kV.
f.	60 Hz Withstand Voltage, Wet	18 kV.

3. Use: Insulators must be suitable for various assemblies including cantilevers, cross spans, headspans and for use as strain insulators.

4. Metal Parts: Malleable iron, or forged steel; galvanized prior to assembly in accordance with ASTM A153, or stainless steel.

5. Environment: Insulators must be capable of withstanding service in an environment which includes exposure to:

a. Ultraviolet radiation.

b. Moisture.

c. Surface discharges.

d. Ozone.

e. Temperature extremes.

f. Engine exhaust fumes.

g. Urban contaminants such as industrial pollutants.

6. Porcelain Insulators:

a. Manufacture from best commercial-grade wet-process porcelain in accordance with ASTM D116.

b. Glaze entire porcelain surface of insulator that will be exposed after assembly in Number 70 light gray color as specified in ANSI Z55.1.

c. Insulator Surface: Free of imperfections.

d. Cause for Rejection:

1) Imperfections in glaze repaired by recoating and re-firing

2) Imperfections in glaze repaired by retouching with paint.

7. Synthetic Insulators:

a. Acceptable Material: Molded ethylene propylene copolymer with hydrated alumina filler.

b. Ultraviolet Protection: Integrated within molded casting material and not as an exterior coating applied to the surface.

c. Stress due to temperature variation and cyclical mechanical extension/contraction in any part of insulator under load and normal handling must not lead to deterioration.

d. Chemical interactions must not cause degradation of materials.

8. Strain and Suspension Insulators:

a. Mechanical strength must exceed ultimate strength of conductor, wire or cross span guy to which it is attached.

b. Insulators must be furnished complete with integral hardware suitable for connection to supports or contact hardware.

c. Fiberglass-reinforced epoxy solid rod type.

d. Rod fibers must run longitudinally through the rod length.

e. End fitting attachment methods: Compression sleeve, wedge or adhesive. If adhesive is used, adhesive must encapsulate rod in end-fitting cavity and must form a compressive wedge upon loading.

f. End fittings attached to an insulator's fiberglass rod must ensure exact alignment with rod and assemblies connected to insulator in order to avoid torsional stress when insulator is installed.

9. Composite Type: Molded ethylene propylene copolymer jacket or weather sheds formed over a fiberglass-reinforced epoxy core. Interface between rod and weather shed must, for life of the insulator, remain void free and dry without experiencing moisture ingress damage.

10. Each insulator must bear the manufacturer's name or trademark and year of manufacture, clearly and permanently imprinted, without affecting appearance or function of insulator.

2.04 DISCONNECT SWITCHES

A. Refer to Section 34 23 27 - Overhead Contact System Pole-Mounted Disconnect Switches.

2.05 SURGE ARRESTERS

A. Refer to Section 34 21 16.22 - TES - DC Surge Arresters.

2.06 FABRICATED STEEL

A. All fabrication and erection of structural steel must be performed in accordance with latest edition of AISC Manual of Steel Construction as identified in the reference section.

B. For the fabrication of metalwork which will be exposed to view, use only materials which are smooth and free of surface blemishes including pitting, seam marks, roller and grinding marks or welds. Remove marks by grinding, prior to cleaning, treating and application of finishes, including zinc coatings.

C. Use materials of the size and thickness indicated in the Contract Documents, or if not indicated, of the required sizes and thickness to produce strength and durability in the finished product consistent with the design. Work to the dimensions indicated in the Contract Documents or accepted on shop drawings, using proven details of fabrication and support. Use the type of materials indicated in the Contract Documents.

D. Form exposed work true to line and level with accurate angles and surfaces and straight sharp edges. Ease exposed edges to a radius of approximately 1/32 - inch unless otherwise indicated in the Contract Documents. Form bent-metal corners to the smallest radius possible without causing grain separation or otherwise impairing the Work.

E. Verify dimensions by accurate field measurement before fabrication whenever work adjoins other Work that precedes it in construction. Do not delay job progress; allow for trimming and fitting of metalwork whenever the taking of field measurements before fabrication might delay the Work. On shop drawings, note which dimensions have been verified by field measurement.

F. Weld corners and seams continuously and in accordance with the recommendations of AWS D1.1. Grind exposed welds smooth and flush to match and blend with adjoining surfaces.

G. Form exposed connections with hairline joints which are flush and smooth, using concealed fasteners whenever possible. Use exposed fasteners of the type indicated in the Contract Documents, and if not indicated, use stainless steel Phillips flat-head (countersunk) screws or bolts.

H. Pre-drill bolt and screw holes as indicated in the Contract Documents and as required for attachment of metalwork and for the attachment of adjacent materials.

I. Cut, reinforce, drill and tap metalwork as required to receive finish hardware and similar items of work.

J. Use hot-rolled steel bar for work fabricated from bar stock, unless work is indicated in the Contract Documents or to be fabricated from cold-finished or cold-rolled stock.

K. Preassemble work at shop to the greatest extent possible to minimize field splicing assembly of units at the Worksite. Disassemble units to the extent necessary to comply with shipping limitations. Mark all units clearly for assembly and proper installation.

L. Where indicated as galvanized, complete the shop fabrication prior to application of the coating. Remove mill scale and rust, clean and pickle the units as required for coating. Apply hot-dip zinc coating of two ounces per square foot in accordance with ASTM A123.

M. Castings:

1. Strength and selection of grade to satisfy loading requirements.

2. All castings to be clean and free of pitting and fissure impurities.

3. Clean and/or grind irregularities before galvanizing.

N. Metal Plates:

1. Fabricate metal plates in accordance with ASTM A36, ASTM A6, and ASTM A572. Catenary ground plates to be fabricated as indicated in the Contract Documents.

2.07 FINISHES

A. Galvanizing:

1. Steel members, fabrication and assemblies to be galvanized after fabrication:

a. Method: Hot-dip process in accordance with ASTM A123.

b. Weight of zinc coating to conform to requirements indicated under ASTM A123, Weight of Coating, unless otherwise directed by the Resident Engineer.

2. Safeguard against steel embrittlement in conformance with ASTM A143.

3. Safeguard against warpage or distortion of steel members must conform to ASTM A384. Notify the Resident Engineer of potential warpage problems which may require modification in design before proceeding with steel fabrications.

4. Finish and uniformity of zinc coating and adherence of coating to conform to ASTM A153.

5. Apply passivating treatment or light oiling to prevent humid storage stain to galvanizing materials subject to extended periods of storage in open exterior locations. Treatment, solution and process to be subject to the Resident Engineer's approval.

6. Do not treat freshly galvanized or passivated surfaces with oils, grease, or chemicals which might interfere with adhesions of subsequent paint primers and coatings.

7. Visually inspect galvanized materials, fabrications and assemblies for conformity with applicable requirements of AHDGA, Inspection Manual for Hot-Dip Galvanized Products. Submit inspection reports to the Resident Engineer.

8. Galvanizing to be performed by a company belonging to the American Galvanizers Association.

PART 3 - EXECUTION

3.01 INSTALLATION - GENERAL REQUIREMENTS

A. The following describes the work required for the installation of the wiring and fittings of the complete OCS system.

B. Work must also include design verification, stringing, tensioning, supporting and registering the conductors, jumpers, feeders, surge arrestors and other ancillary equipment and hardware, including contact bridges and other components, as required to provide a complete and fully operational OCS.

C. Contractor must be responsible for coordinating the OCS installation. Contractor must also submit, for review and approval by the Resident Engineer, drawings for temporary anchorages, guying and electrical isolations.

D. The manufacturer’s recommended installation practice must be followed. Information in these specifications must be incorporated and accounted for by the manufacturer’s recommended installation practices. All installation must be in accordance with the requirements in these Specifications and State and local regulations:

1. Verify along track stationing and structure offsets of pole foundations, concrete inserts, and concrete embedded framing channels prior to commencing Work. Notify the Resident Engineer within 2 days of finding any discrepancies.

2. New or existing components must not be drilled, cut, bent or reamed without prior approval of the Resident Engineer.

E. Fasteners must include bolts, nuts, locknuts, washers, pins, turnbuckles, machine screws and other items that may be used to attach items together:

1. Fasteners must be installed in accordance with the manufacturer's recommendations.

2. Bolts must be of sufficient length to allow two full threads to extend beyond the nuts and locknuts; however, the end of the bolt must never extend more than 1.5 inches beyond the nut or locknut.

3. Threads of bolts, nuts, and machine screws must be lightly lubricated prior to assembly, and must be torqued using a calibrated torque wrench in accordance with the manufacturer recommendations.

4. Fittings, fasteners, or any other attachments that do not fit, are cracked, sustain galvanizing damage during installation, or are found to be defective in any way must be rejected.

F. Turnbuckles, where used, must be installed in a manner which will provide 6 inch adjustments in each direction for future maintenance. Final installation must provide adjustment in both directions for future maintenance.

G. At each stage of work, contact wire must be handled with specific care to avoid bending, kinking, twisting, or other forms of damage. Damaged contact wire must be replaced with new contact wire by the Contractor. Kinked contact wire must be straightened by the Contractor.

H. Contractor is responsible for proper fit of OCS pole bases and downguy anchor plates to foundation anchor bolts.

I. Anchor securely as indicated in the Contract Documents or as required for the intended use.

J. Install insulating devices or butyl tapes in between dissimilar metals.

K. Installation Tolerances:

1. The installed OCS must conform to the dimensional requirements shown on the Contract Drawings within the following tolerances:

a. Contact wire height in tunnels: - 0 inch, +1/2 inch.

b. Contact wire height in open route: - 0 inch, + 1 inch.

c. Contact wire height in stations: - 0 inch, +1 inch.

d. Contact wire stagger at registration: +/- 1/2 inch.

e. System height: 1 inch.

f. Hanger location: 3 inches.

g. Contact Wire Sag (Mid Span Height): 1/2 inch.

h. Messenger to contact wire lateral displacement at support: 1 inch.

i. Pole base elevation: 1 inch.

j. Pole rake (after loading): 1 inch (at top).

k. Wire tension: 3 percent.

3.02 OCS CONDUCTOR STRINGING

A. Overhead conductors must be installed in accordance with the Contractor's Construction Work Plan (CWP), as approved by the Resident Engineer.

B. Allowance must be made for conductor creep:

1. In order to reduce creep, the Contractor must pre-stress the contact wires prior to final installation. The procedure for pre-stressing the contact wire must be submitted to the Resident Engineer for approval. CWP must describe the proposed method including:

a. The pre-stress tension for the contact wire before being reduced to normal tension.

b. The duration the conductor must remain at the pre-stressed tension as defined in the contractor’s construction work plan.

c. The Contractor's check of the adequacy of the catenary structures to ensure that they can safely carry any proposed loading in excess of the design values.

C. Conductor Erection Spreadsheet:

1. Develop a Conductor Erection Spreadsheet using Temperature/Tension Charts in Contract Drawings.

2. Prior to setting conductor tension, measure actual conductor temperature using contact thermometer.

3. Enter conductor temperature and span data on the Conductor Erection Spreadsheet and use to ensure conformity to actual wire data before starting contact wire final stringing.

4. Update Conductor Erection Spreadsheet for each section of wire.

D. Conductors:

1. Attach to anchor and string out, holding conductors in its approximate lateral and vertical position in relation to the track centerline.

2. Prevent kinking by using temporary rollers at supports and ST and EOR approved pulling and clamping devices.

3. Pre-stress conductors after stringing.

4. After pre-stressing conductors, reduce to installation tension appropriate for the conductor temperature and attach to cantilever insulators or steady arms, removing twists in contact wire by working from one anchor to the other.

E. After final tensioning has been completed, the headspans, cross spans, cantilevers and pull-offs must be checked and the conductor heights, staggers, heel settings and along track position adjusted as required in order to obtain the values given in Contract layout drawings.

3.03 ASSEMBLY INSTALLATION

1. Down Guy Anchor Plates:

a. Install in a similar fashion as pole baseplates, in accordance with specification Section 34 23 13 - Overhead Contact System Metal Poles.

2. Support Assemblies, Drop Pipes, and Drop Vertical Supports:

a. Install in accordance with Contract Drawings and manufacturer's recommendations.

b. must be plumb, within 5 degrees.

3. Fasteners, Eyebolts and Anchor Bolts:

a. Fasteners must include bolts, nuts, locknuts, washers, pins, turnbuckles, machine screws and other items which may be used to attach items together.

1) Fasteners must be in English units unless otherwise approved by the Resident Engineer.

2) Fasteners must be installed in accordance with the manufacturer's recommendations.

3) Field connection must be bolted unless otherwise noted in Contract Documents.

b. Bolts:

1) Bolt holes: Minimum size 1/16 inch larger than bolt diameter, unless otherwise noted in Contract Documents.

2) Bolt length:

a) Bolts must be of sufficient length to allow two full threads to extend beyond the nuts and locknuts

b) End of bolt must never extend more than 1.5 inches beyond nut or locknut.

3) Bolt and Nut Installation:

a) Lubricate lightly threads of bolts, nuts, and machine screws prior to installation.

b) Torque bolts using a calibrated torque wrench in accordance with manufacturer’s recommendation.

4) Defective fittings must not be used:

a) Fasteners that do not fit.

b) Cracked fasteners.

c) Fasteners with galvanizing damaged during installation.

d) Fasteners found to be defective in any other way.

c. Provide anchor bolts where indicated on Contract Drawings.

d. Fittings must not use epoxy inserts as a method of attachment.

e. Anchor Bolts:

1) Install as required by the Contract. .

4. Cantilevers:

a. Assembly of cantilevers:

1) Suitable fixture to allow pre-assembly of the cantilevers, to specific dimensions, must be developed.

2) Use the fixture together with wire heights, staggers given in the layout plans and the actual pole to track centerline site dimension, at contact wire level to manufacture the cantilever for each location.

3) Contractor must prepare diagrams or charts indicating the actual cantilever tube lengths and diameters for each cantilever installed throughout the project.

4) The documents, in addition to the tube lengths, must also indicate the cantilever location, track and OCS registered and supported.

b. Erecting Cantilevers:

1) Contractor must erect the cantilevers on each pole at the heights necessary to obtain the designed OCS heights.

2) For stability during conductor stringing, the Contractor must temporarily restrain the cantilever in the along track direction to prevent collapse.

3) Conductors must not be clipped in to the arm until after pre-tensioning is completed.

c. Cantilever Fittings:

1) Cotter pins and nuts on each cantilever must be located on the side of the structure facing normal direction of traffic.

2) In addition, the assemblies fitted with these components must be oriented, whenever possible, in a manner which will hold the components together by gravity and radial load should the pins or nuts become detached during service conditions.

3) Must be installed in the proper direction as depicted on the ST approved shop drawing.

d. Components employing a hinge or swivel must be greased with ST approved grease before assembly of the rubbing surfaces and cleaned of excess grease.

e. After installation of the cantilevers and stringing of the conductors, adjustments must be made to the stagger, heel setting, contact wire heights and alignment as necessary. All cantilevers must be held perpendicular to the track for a wire temperature of 60 degrees F, and the wire must be tensioned to the design tension derived from the Erection Tension Charts in the Contract Drawings. Contractor may submit alternative method to the Resident Engineer for approval.

5. Head Spans:

a. Cross spans, headspans, and bridle assemblies must be manufactured in accordance with the OCS layout drawings.

b. Assemble cross spans, headspans, and bridles after each installation location has been surveyed and the following necessary information and dimensions measured along the axis of the span have been checked:

1) Face of station wall to face of wall.

2) Design centerline of track to face of station wall.

3) Design centerline of track to centerline of track.

4) Elevation of the foundations in relationship to the tracks.

5) Track superelevations and direction.

c. Provide cross span and headspan insulation in addition to inter-track insulation that may be required.

d. Design cross spans to clear pantograph dynamic envelope shown on Contract Drawings.

e. The loading on each assembly must be checked to ensure that each assembly is acceptable under each loading condition, must not sag and must not infringe on the pantograph clearance envelope.

6. Cross spans:

a. See Head Spans Above.

7. Span Wire and Portal Registrations:

a. Install in accordance with Contract Drawings and manufacturer's recommendations.

8. Pull offs:

a. Pull-off assemblies must be manufactured in accordance with the ST approved Contractor's OCS layout drawings.

b. Actual site measurements for each pull off must be obtained prior to pull-off assembly installation on the poles.

c. After conductor stringing, pull-offs must be adjusted to obtain the correct conductor heights, staggers and heel settings.

d. The loading on pull off assemblies must be checked to ensure that each assembly is acceptable under all loading conditions, must not sag and must not infringe on the pantograph clearance envelope.

9. Tunnel Supports:

a. At each location where a tunnel support or bridge attachment must be installed, verify all field measurements prior to installation

b. After installation of tunnel support or bridge attachment the contractor mustverify that all required clearances are met.

c. Adjust tunnel arms to obtain conductor heights and staggers as shown on Contractor's layout plans after assembly installation.

1) Adjust the contact support arm to ensure that the uplift, under normal pantograph pressure, does not exceed the value used in the pantograph clearance envelope.

2) Leave sufficient adjustment of the assembly available to allow for future maintenance requirements.

3) Carefully check each location to ensure that the electrical clearances between live equipment and the tunnel or live equipment and the pantograph envelope are not infringed under any climatic conditions.

10. Section Insulators:

    a. Cut section insulators into tension length only after OCS is at final tension and adjustments have been made and final checking completed.

    b. Section insulator types and locations mustl be as shown on Issued for Construction layout drawings and must be installed in accordance with the manufacturer's recommendations.

    c. The section insulator must be adjusted to provide a smooth passage for the pantograph without causing rocking or excessive arcing.

    d. The section insulator must be free to move along track without twisting or becoming misaligned.

    e. Electrical connectors and clamps must be prepared and protected externally and internally in accordance with the manufacturer's recommendations.

    f. Extreme care must be taken during installation of the section insulator to ensure that the conductors are not damaged. Damaged contact wire or section insulator must be replaced at the Contractor's expense.

11. Feeder Connections:

    a. Connect dc feeder cables where shown on Contractor’s OCS layout drawings and install as indicated on Contract Drawings.

    b. Install, secure, and shape the feeder cables to avoid conflicts with pantograph.

    c. Connect feeder jumpers to supports, cross spans and headspans by means of insulated cable straps.

    d. Clean, wire brush, and lubricate conductor with manufacturer-recommended conductive grease before installing connector clamps to contact wire.

    e. Verify that when tightened to manufacturer’s recommended torque value no distortion occurs to the feeder wire, messenger wire, or contact wire.

12. Balance Weights:

    a. Install in accordance with Contract Drawings and manufacturer’s recommendations.

    b. Yoke plate must be plumb, within 5 degrees.

13. Fixed Anchors:

    a. Install in accordance with Contract Drawings and manufacturer’s recommendations.

14. Y-Terminations:

    a. Install in accordance with Contract Drawings and manufacturer’s recommendations.

15. Constant-Tension Spring Terminations:

    a. Install in accordance with Issued for Construction Drawings and manufacturer's recommendations.

    b. Torque values must be set according to manufacturer's instructions with a calibrated torque wrench.

    c. Turnbuckle positions must be set to allow for wire adjustment to account for permanent wire stretch over the lifespan of the wire.

16. Knuckles:

    a. Install in accordance with Issued for Construction Drawings and manufacturer's recommendations.

17. Contact Bridges:

    a. Contact bridges must use shop straightened contact wire and must be installed at turnout locations shown on Contractor's layout drawings.

    b. The contact bridges must allow free movement of the contact wires over the operating temperature range.

    c. Adjust upper contact wire to float through the contact bridge assembly under normal conditions with no pantograph uplift.

18. Jumpers:

    a. Jumpers and feeder cables must be erected where shown on the OCS layout drawings and must be installed as indicated.

    b. Calculate the required lengths of the jumpers, based on actual field measurements and the jumpers must be installed to avoid conflicts with the pantograph, adjacent cantilevers and contact wire bridges.

    c. Install connection clamps in accordance with manufacturer's recommendations.

    d. Clean, wire brush, and lubricate conductor with manufacturer-recommended conductive grease before installing connector clamps.

    e. Minimum wire projection through connection clamp: 1/2 inch.

    f. Tie wire-ends.

    g. The connector bolts must be torqued to the manufacturer's recommendations using a calibrated torque wrench.

19. In-Span Insulators:

    a. Insulators must be cleaned before installation.

    b. Only clean rags free from abrasive material must be used for cleaning insulators.

    c. Wire brushes must not be used for cleaning parts of an insulator including the metal fittings.

d. In each completed line section, insulator assembliesmust be clean, bright and free from nicks, chips or other marks. Porcelain insulators having broken or cracked sheds or porcelain coating must be rejected and replaced with new insulators.

e. Where runnable type in-span contact wire insulators are used the transition between the runnable insulator and the contact wires must be smooth and arc-free during operation.

20. Splices:

a. Conductor splicing is necessary at the locations shown on the contract drawings.

b. No other contact and messenger wire splices are permitted without prior approval of the Sound Transit.

c. Contact wire ends must be cut straight to allow for flush mating in the contact wire splice. There must be no gaps between running surfaces of the contact wire. After installation of contact wire splice, the running surface of the contact wire must be filed smooth to provide a smooth, arc-free transition between the spliced contact wires.

21. Midpoint Anchors:

a. Install in accordance with Contract Drawings and manufacturer's recommendations.

22. Bridles:

a. See Head Spans above.

23. Downguys and Headguys:

a. Pole attachments may be erected and adjusted as required during the pole erection process.

b. Installation must be based on the ST approved OCS layout plans and the Contractor's subsequent designs of down guys.

24. Hangers:

a. Install in accordance with Contract Drawings and manufacturer's recommendations.

b. Messenger wire clips must be straight up and down after final installation.

c. Contact wire clips must be straight up and down after final installation.

d. Hanger wire must be straight up and down after final installation.

25. Brackets, Pole Bands and Pole Slings:

a. Install in accordance with Contract Drawings and manufacturer's recommendations.

26. Anchor Brackets:

    a. Install in accordance with Contract Drawings and manufacturer's recommendations.

27. OCS Monitoring System:

    a. The Contractor must run power and communications cables between the OCS Monitoring System, the communications interface cabinet and the communications cases. Power and communications cables must be separated if installed in the same raceway.

    b. Install in accordance with Contract Drawings and manufacturer's recommendations.

28. Warning Signs and attachment method:

    a. Pole Identification Sign:

        1) Must be installed as shown on Issued for Construction Drawings.

    b. Live Wire Warning Sign:

        1) Must be installed on poles adjacent to overhead bridges

        2) Must be installed on both sides of the pole facing the track

        3) Must be installed at 15 feet – 00 inches above top of rail.

    c. Warning Sign for Station Platform:

        1) Must be facing both tracks on each pole inside the station limits.

        2) Must be installed 5 feet – 00 inches above top of the rail.

    d. Pole ID Label:

        1) Must be installed as shown on Issued for Construction Drawings.

    e. Warning Sign, End of Electrification:

        1) Must be installed on the pole at the end of the alignment facing oncoming vehicles.

    f. Warning Sign for Grade Crossing:

        1) Must be installed facing both tracks on poles adjacent to grade crossings.

    g. Identification signs must be applied after painting of the mounting surface.

    h. Ensure that surfaces where signs are attached are free of ice, dirt, or foreign objects.

    i. Install other signs as shown on Issued for Construction Documents in type and locations as indicated.

29. Miscellaneous:

a. Install the underground feeder cables from the disconnect switches to the substations, as indicated, and feeder cables and jumpers from the disconnect switches to the OCS as depicted in the Contract Drawings

3.04 GROUNDING

A. Refer to the Contract requirements for grounding.

B. On each pole without a surge arrester, a 4/0 pole ground wire must be exothermically welded to the top of the existing foundation ground rod or existing exposed ground tail.

C. Theft deterrent construction of wire must be used for all exposed grounding applications. The conductor must utilize corrision resistant steel stranding to make cutting with hand tools difficult and result in the cable being magnetic. Theft deterrent cable must be electrically equivalent to the copper size listed and must be rated for compression cable lug and exothermic weld connections.

D. On each pole requiring a surge arrester that is installed on a drilled – cast in place foundation drive a ground rod as required by the Contract in accordance with and connect the ground side of the arrester to the ground rod with a 2.4 kv rated flexible 4/0 conductor as shown on Issued for Construction Drawings.

E. The final connection of the 4/0 ground wire to each OCS pole must be made with a crimped lug bolted to the stud provided by the pole manufacturer inside the pole.

F. Where exothermic welds are to be made to a galvanized surface, galvanizing must be removed using a grinding wheel to expose a clean surface.

G. After welding, repair the galvanized coating on the steel surface as required in this specification.

H. Exothermic welding cartridges and molds must be for the type of weld shown on the Contract Drawings and be performed in accordance with the manufacturer's recommendations. Worn and damaged molds must not be used. Where directed by the Resident Engineer, welds and molds must be replaced.

3.05 FIELD QUALITY CONTROL

A. Inspections and Tests:

1. Inspection, tests and samples to conform with listed ASTM Specifications and Standards.

2. Inspection rights and privileges, procedures and acceptance or rejection of galvanized steel materials to conform to ASTM A123.

3. Inspection and tests submitted to the Resident Engineer to include the following:

a. Visual examination of samples and finished products.

b. Tests to determine weight or mass of zinc coating per square foot of steel surface.

c. Tests to determine distribution and uniformity of zinc coating.

d. Test to determine fissures and voids in castings. Submit minimum of one of each type casting for dissecting to the Resident Engineer with each new

casting lot. Results of testing are cause for rejecting casting and/or lot. Decision of the Resident Engineer is final.

4. Tests to determine thread fittings of units, washers to bolts.

B. Shop Welding Inspection and Testing:

1. Visual Inspection: AWS D1.1. Visually inspect 100 percent of welds on both permanent and temporary Work.

2. Ultrasonic Testing: AWS D1.1. Test complete joint penetration groove welds as follows:

a. 10 percent with thickness equal to or less than 3/4 inch.

b. 50 percent with thickness greater than 3/4 inch and equal to or less than 1-1/2 inches.

c. 100 percent for thickness greater than 1-1/2 inches.

3. Magnetic Particle Inspection: AWS D1.1. Inspect complete and partial joint penetration groove welds and fillet welds as follows:

a. 20 percent of complete joint penetration groove welds of tee and corner joints.

b. 10 percent of partial joint penetration groove welds and fillet welds.

4. Liquid Penetrant Inspection: AWS D1.1. Liquid penetrant inspection may be used for detecting discontinuities that are open to the surface.

5. Radiographic Testing: AWS D1.1 as requested by the Resident Engineer.

C. Shop Bolting Inspection: Visually inspect 100 percent of shop bolted connections.

D. Shop Inspection and Testing by the Resident Engineer:

1. Allow the Resident Engineer access to perform independent verification testing and inspection.

E. Welds and bolted connections are subject to inspections and tests by the Resident Engineer. The Resident Engineer will select inspect welds at random.

3.06 REPAIR

A. Report damage to the Resident Engineer and provide a reason for damage to the equipment:

1. Provide a proposed repair procedure or remove and replace damaged components.

2. No repairs of insulators must be allowed, replace damaged insulators prior to turn over of system.

3. Damaged parts that have been replaced must be removed from the site.

4. Make repairs to the OCS only as approved by the Resident Engineer.

B. Contact Wire Repair:

1. Vertical and Lateral Kinks:

   a. Remove kinks using hydraulic actuated crimping tool, roller, or other method/tool approved by the Resident Engineer.

2. Correct twists in the contact wire.

3. The Resident Engineer will determine whether contact wire repair is satisfactory.

4. Replace contact wire that cannot be repaired to the satisfaction of the Resident Engineer.

C. Galvanizing Repair:

1. Damage to the galvanizing of pipes, drop tubes, brackets and steady arms must be repaired by the brush application of a specified suitable zinc-rich, cold galvanizing repair paint, ZRC Cold Galvanizing Compound, or an approved equal by the EOR.

2. Spray application is not permitted.

3. Surface preparation and application of the galvanizing repair must be in accordance with the repair material manufacturer's recommendations.

4. Other components with damaged or defective galvanizing must not be installed and must be removed from the construction site.

5. Work associated with galvanizing repair will be at Contractor's expense.

END OF SECTION

SECTION 34 23 27

OVERHEAD CONTACT SYSTEM POLE-MOUNTED DISCONNECT SWITCHES

PART 1 - GENERAL

1.01 SUMMARY

A. Section includes:

1. Requirements for OCS pole-mounted, manual, no load break DC disconnect and DC bypass switches.

1.02 REFERENCES

A. This Section incorporates by reference the latest revisions of the following documents:

1. .ASTM International (ASTM):

a. ASTM B187/B187M - Standard Specification for Copper, Bus Bar, Rod, and Shapes and General Purpose Rod, Bar, and Shapes.

2. Institute of Electrical and Electronics Engineers (IEEE):

a. IEEE C37.41 - IEEE Standard for Design Tests and Specifications for High-Voltage (> 1000 V) Fuses and Accessories

b. IEEE C37.30.1 - IEEE Standard Requirements for AC High-Voltage Air Switches Rated Above 1000V.

3. National Electrical Manufacturers Association (NEMA):

a. NEMA 250 - Enclosures for Electrical Equipment (1,000 Volts Maximum).

b. NEMA ICS 1 - Industrial Control and Systems: General Requirements.

c. NEMA ICS 2 - Industrial Control and Systems Controllers, Contactors and Overload Relays Rated 600 Volts.

1.03 SUBMITTALS

A. Submit:

1. Product Data: Complete manufacturer's descriptions, catalog data, and information including materials and model numbers.

2. Shop Drawings: Manufacturer's general and detail arrangement drawings for components comprising switch assembly.

a. Show all dimensions including mounting and operating handle.

b. Parts list, illustrations and diagram for components.

c. Interlock data.

3. Operation and Maintenance Data:

a. Description of the switch, its components and interlock.

4. Manufacturers' operating and maintenance instructions, parts list, illustrations and diagram for components. Testing: Submit test procedures and test reports in accordance with Section 34 23 69 - Overhead Contact System Testing.

PART 2 - PRODUCTS

2.01 DC DISCONNECTING SWITCHES

A. Description: The DC disconnecting switches must be single-pole single-throw, or single-pole double-throw air break switch type with manual operator mechanism for operating at track level.

1. Design must comply with the applicable requirements given in IEEE C37.41, IEEE C37.30.1, ASTM B187/B187M, NEMA ICS 1, and NEMA ICS 2.

2. Ratings:

a. Voltage: 1500 Vdc.

b. Insulation Level: Dry 1 minute power frequency 5.7kV rms (energized parts to ground and gap between positive and negative parts).

c. Continuous Current Ratings: As noted on Contract Drawings. Rating to be applied without the switch contact temperature rise exceeding 50 degrees C above a maximum ambient temperature of 40 degrees C.

d. Momentary Peak Current Withstand: Not less than 90 kA.

e. Short-Time Current Rating: Not less than 70 kA, average, for 0.25 second.

B. Switch Insulation Structure: Materials used for the switch assembly insulation structure must be noncombustible, nonhygroscopic, and tracking resistant. The mechanical strength of the insulation structure must match the stresses imposed by the rated momentary current.

C. Switch Contacts:

1. Moving and stationary contact surfaces must be silver-plated copper. All other current-carrying parts must be of high-conductivity copper or copper alloy. Contacts must be self-aligning, wear compensating, and with initial wiping action.

2. Hinge and jaw contacts must be bolted-pressure type with non-ferrous or stainless steel self-clamping mechanism, or other approved high-pressure type contact arrangement.

D. Pole-Mounted Manual-Operated Disconnecting Switch Assembly:

1. Disconnect switches must be single or twin, two-position, single-throw, non-load-break, non-grounding (except where indicated otherwise), non-fusible air switches with arcing horns. Basis of Design: MAC Products, Inc. D-16452 or approved equal.

a. Disconnect switches must be capable of breaking load currents under emergency conditions.

b. Switches must be suitable for mounting on tapered-tubular, or wide-flange poles.

2. Disconnect switches must be equipped with a pole-mounted operating tube, links and a handle for operating at track level, insulated from the switch.

3. Operating mechanism:

a. Operating mechanism must operate easily, without free movement.

b. Provide operating handle with heavy-duty lugs to accept one padlock, provided by Contractor, in the fully open or closed switch positions. Resident Engineer to provide padlock keying requirements.

c. The manual operating mechanism of the pole mounted switches must not intrude into the vehicle envelope.

4. Provide corrosion resistant nameplates permanently secured to enclosure to show OPEN and CLOSED positions of switch contacts.

5. Disconnect switch blades and contact surfaces must be silver-coated copper or copper alloy.

6. Provide for SCADA and LCMS indication of the operating handle position.

E. Interlocking device: Provide keyed interlock systems were shown on Contract documents to ensure that a pre-determined sequence of operation is followed to operate switches. Removal of a key will make the interlocked device non-operable mechanically and electrically. The same key must enable operating the next interlock in the sequence. The interlock components must be manufactured from electropolished 316 Stainless.

F. Cable Termination: Provide line and load side disconnecting switch terminals with silver-plated copper bus complying with ASTM B187/B187M to accommodate the number and size of DC power copper cables, entering from below or from above, as indicated.

G. Provide switch terminals with the proper size and quantity of NEMA terminal lugs.

H. Perform tests in accordance with Section 34 23 69 - Overhead Contact System Testing.

PART 3 - EXECUTION

3.01 INSTALLATION

A. Install disconnect switches at locations shown on Contract Drawings.

B. Install switches in accordance with approved manufacturer's instructions. Provide mounting hardware as required.

C. Coordinate installation with design of disconnect switch supporting hardware, feeder wire installation, and routing, and ensure designs are fully integrated with the installed attachments.

D. Attach operating mechanism of pole mounted switches and pole mounted junction box to poles and position so that handles do not intrude into the track clearance envelope.

1. In general, operating handle must move away from or parallel to track.

2. Install switch such that a person operating the switch will not be in danger from passing vehicles.

3. If doubt exists about which way to face a disconnect switch, obtain clarification from Resident Engineer.

E. Install operating handle at a height that allows switch to be operated easily by a person standing on the ground.

F. Provide cable clamps on line and load side of switches to prevent stress on connectors and switch jaws.

3.02 FIELD QUALITY CONTROL

A. Perform tests in accordance with Section 34 23 69 - Overhead Contact System Testing.

3.03 ADJUSTING

A. Adjust switches after installation to provide proper mating of the blades and easy alignment and operation.

END OF SECTION

SECTION 34 23 69

OVERHEAD CONTACT SYSTEM TESTING

PART 1 - GENERAL

1.01 SUMMARY

A. Section includes:

1. Requirements for conducting the tests to verify compliance with Contract performance, reliability and maintainability requirements, including.

a. Tests described in this Section must be performed as indicated Tests must be performed on production components without modification or special preparation.

b. The tests specified herein are considered to be an absolute minimum. The Contractor must be responsible for assuring that each design and performance requirement of this Specification is assigned to a specific test effort. The Contractor must submit a Test Plan as specified. The Contractor and its subcontractors may perform additional testing, as they deem necessary.

c. Material test requirements may also appear in other Sections. Other test requirements may appear in other Sections. The Contractor must integrate all of these tests into the Test Plan.

d. After the OCS has been installed and ready for operation, Field Installation Tests and Field System Tests must be performed to verify physical and electrical integrity of the system and to verify quality of workmanship.

e. Following completion of field testing, Systems Integrated Tests must be performed to demonstrate clearances and commutation without arcing.

f. Testing equipment and personnel must be provided by Contractor unless stated otherwise in these Technical Specifications.

g. Contractor is responsible for performing all tests with qualified personnel. Constant-tension spring terminations must be tested by a technician certified in the system standards.

1.02 REFERENCES

A. This Section incorporates by reference the latest revisions of the following documents:

1. American National Standards Institute (ANSI):

a. ANSI/NEMA C29 - Test Methods for Electrical Power Insulators.

2. International Electrical Testing Association (NETA):

3. ASTM International (ASTM):

a. ASTM B47 – Standard Specification for Copper Trolley Wire.

b. ASTM A938 – Standard Test Method for Torsion Testing of Wire.

4. Institute of Electronic Engineers (IEEE).

5. European Standard (EN):

a. CENELEC EN 50119 - Railway applications - Fixed installations - Electric traction overhead contact lines.

1.03 SUBMITTALS

A. Submit:

1. Test Plan:

a. Submit a comprehensive test plan and schedule. Provide monthly updates.

2. Test Procedures:

a. Each test listed in this specification requires a test procedure to be submitted for approval.

b. Submit before test is scheduled to be performed.

c. Submit for each test to be performed under the appropriate Technical Section of these Specifications, not under this Section.

3. Test Results:

a. Submit for each test to be performed under the appropriate Technical Section of these Specifications, not under this Section.

4. Test Reports:

a. Submit for each test performed under the appropriate Technical Section of these Specifications, not under this Section.

b. Factory Design Test Reports:

a) Existing test reports.

b) New test reports.

c. Factory Production Test Reports:

a) Existing test reports.

b) New test reports.

d. OCS Field Acceptance Test Reports.

e. System Integration Test Reports.

5. Verification OCS is installed to specifications prior to field acceptance tests, signed by OCS Supervisor and Project Manager.

1.04 QUALITY ASSURANCE

A. Witnessing of Tests:

1. The Resident Engineer will, at their option, witness all tests.

2. Testing Notification: At least 30 days prior to each test upon the approval of test procedure, notify the Resident Engineer in writing of the date, time, and location the test will be performed.

3. If the Resident Engineer elects not to witness a test or tests, test reports must nevertheless be submitted to Sound Transit for review and approval.

4. Witnessing of test by Resident Engineer must not relieve Contractor from its responsibility to produce test report in accordance with Contract Documents.

B. Performance of Testing:

1. OCS system and its components must be tested to verify compliance with Contract performance, reliability, and maintainability requirements.

2. Tests described in this Section must be performed as indicated unless specifically waived by the Resident Engineer. Tests must be performed on production components without modification or special preparation.

3. After the OCS has been installed and is to be made ready for operation, field installation and system testing must be performed to verify physical and electrical integrity of the system and to verify quality of workmanship.

4. Factory design or production testing of individual components must be performed by component manufacturer at the plant of manufacture or at a testing facility as approved by the Resident Engineer.

5. Field testing of insulated power cables rated 2 kV and higher must be performed by a NETA certified technician working for an independent testing company under direct supervision of manufacturer of the substation equipment and hired by manufacturer of substation equipment:

a. NETA technician must have at least 5 years of experience in construction acceptance testing of similar equipment.

b. Testing company must be a NETA member. Evidence of qualification must be submitted.

c. After Resident Engineer approval, testing company must not be discharged or otherwise replaced without written approval of Sound Transit.

6. Following completion of field installation and system testing, LRV tests must be performed to demonstrate clearances and commutation without arcing.

C. Test Classifications:

1. Factory Design Tests (Level 1 tests):

a. Must be conducted by or under supervision of the equipment manufacturer.

b. Must demonstrate compliance with specified design requirements.

c. Must be performed on production components, assemblies, subsystems and substations and must be performed on the highest level of assembly that will allow demonstration of design compliance.

d. Limited to the number of units needed to demonstrate design compliance, typically one or two.

2. Factory Production Tests (Level 1 tests):

a. Must be conducted by or under the supervision of the equipment manufacturer.

b. Must demonstrate that the units to be delivered operate within specified limits and are in compliance with design requirements and industry standards.

c. Test requirements may vary from an inspection and functional demonstration for a simple component to a full system functional demonstration of an assembly.

d. Perform at OCS manufacturer's facility prior to shipment of OCS equipment to the field.

e. Perform at ambient conditions unless a specific environmental or operating limit is necessary to demonstrate acceptable operation.

3. Field Installation Tests (Level 1 tests): Demonstrate that installed OCS over each track section is installed properly. Tests include:

a. Acceptance Measurements.

b. Mechanical Tests.

c. Clearance Tests.

4. Field System Tests (Level 2 tests): Demonstrate that installed OCS over each track section is ready for LRV testing functionally and revenue service cosmetically. Tests include:

a. Electrical Test.

b. OCS Energization Test.

5. Systems Integrated Tests (Level 3 tests):

a. Perform LRV tests with a Sound Transit LRV equipped for testing by Contractor as described below.

b. Demonstrate clearances to pantograph and LRV body.

c. Demonstrate operation at maximum permissible speed without loss of contact, arcing, or physical interference with a pantograph by the OCS.

d. Demonstrate other parameters the Resident Engineer considers important for efficient operation.

PART 2 - PRODUCTS

2.01 MATERIALS

A. Supply tools and equipment for performance of tests with exception of LRVs and LRV operators which Sound Transit will furnish for the integrated testing.

2.02 SOURCE QUALITY CONTROL

A. Factory Design Tests:

1. Component Design Tests: Perform on each component specified in this Section and submit to Sound Transit for approval.

   a. Perform tests on first production units in accordance with these Specifications.

   b. If manufacturer of equipment has already performed design tests, existing test reports may be submitted to the Resident Engineer for approval.

   c. Existing test reports will not be required to meet format requirements specified in this Section.

   d. Existing test reports must include relevant information.

2. OCS Insulators: Perform the following design tests as described in ANSI C29 for one insulator of each type and rating supplied:

   a. Power Frequency Withstand.

   b. Impulse Withstand.

   c. Thermal Capacity.

   d. Mechanical Strength.

   e. Resistance.

3. OCS Section Insulators: Perform the following design tests for one section insulator of each type supplied.

   a. Resistance to ultraviolet radiation and electrical tracking of insulating material.

   b. Mechanical strength.

      1) The contact wire unit must be tension-proof tested to applicable contact wire maximum tension plus design factors of safety.

   c. Electrical tests:

      1) Dry flashover tests.

      2) Wet flashover tests.

      3) Low frequency dry withstand test.

      4) Low frequency wet withstand test.

      5) Impulse withstand test.

   d. Submit manufacturer in-service performance history of proposed section insulator.

4. Poles: Contractor must demonstrate acceptable deflection values of each type of pole procured under this Contract to the Resident Engineer:

   a. The demonstration must be in the form of a factory design test, performed at the place of the manufacturer.

   b. The testing must be non-destructive and at a place and time agreed by the Resident Engineer.

   c. Parameters to be tested as described in IEEE 1630.

   d. The Contractor must submit to the Resident Engineer, in writing, a test procedure for approval, prior to testing any poles.

   e. The test procedure must include method of application of loads, recording devices, calibration of devices and other information deemed pertinent by the Resident Engineer.

   f. The test must be conducted on a rigid foundation that resists translation and rotation in each axis.

5. Constant-Tension Spring Terminations: Perform on each unique combination of compensation length and rated tension and submit to Sound Transit for approval:

   a. Load Break / Mechanical Strength Tests.

B. Factory Production Tests - Components: Perform on each component specified in this Section and submit to Sound Transit for approval:

1. Fittings, Hardware and Cantilever Tubes: Perform following production tests in accordance with ASTM standards:

   a. Chemical analysis tests on each lot. A lot must consist of castings produced by one furnace melt.

   b. Sample galvanizing tests upon completion of fabrication.

   c. Visual and dimensional tests upon completion of fabrication.

   d. Tests to determine thread fittings of units, washers to bolts.

2. Stainless Steel Wire and Wire Rope:

   a. Test stainless steel wire and wire rope used as support wires and pull-offs in accordance with ASTM A368, ASTM A492 and ASTM A555.

3. Section Insulators:

   a. Perform following tests in accordance with applicable Standards:

      1) Dielectric proof testing for system voltage, minimum 4.5kV

   b. The Contractor must provide data to show that the insulator material is resistant to ultra-violet radiation and electrical tracking.

   c. The contact wire unit must be tension-proof tested to applicable contact wire maximum tension plus design factors of safety.

4. Insulators: Perform following tests:

   a. Visual and Dimensional Tests:

      1) Entire surface must be smooth and free from defects.

      2) If adhesives are used, inspect insulator to see that fillet of adhesive provides a complete seal between coating and end fitting.

      3) Verify that both end fittings are in line after being assembled on rod.

      4) Verify that insulator matches approved shop drawings and Specifications.

   b. Dielectric Proof Test: Perform in accordance with ANSI C29.1 at system voltage, a minimum of 4.5kV.

   c. Mechanical Strength Test: Test insulators at room temperature for 10 seconds to 120 percent of designed tensile, compressive and bending load. Failure must constitute rejection. Test in accordance with ANSI C29.1.

5. Overhead Contact System Conductors:

   a. Perform quality control tests on each reel of wire prior to shipment to site in accordance with applicable standards:

      1) Submit a certified copy of test report for each reel.

      2) Pack a copy of test report with each reel.

   b. Additional Contact Wire Tests:

      1) Test in accordance with ASTM B47.

      2) Twist Test: Test in accordance with ASTM A938 for round wire, except that six twists must be required. Reject contact wire not meeting twist test.

6. OCS pole mounted, manual, no load break dc disconnect and dc bypass switches:

   a. A mechanical operation test must consist of the following:

      1) Fully Open disconnect.

      2) Fully Closed disconnect:

         a) Double throw switches must be subject to all tests using each closed position.

      3) Verify there are no signs of binding, galling, uneven wear or other physical tolerance issues.

      4) Verify blade alignment evenly mates on either side of jaw terminal.

      5) All mechanical linkages for manual operating handle assemblies must move freely and not hinder operation of disconnect.

6) Disconnect must be cycled no less than 10 times.

b. A Dielectric Withstand Test must be conducted to verify the rated voltage of the switch. Tests must consist of applying high potential to test points listed below for a duration no less than 1 minute. Voltage applied voltage level must be no less than twice rated DC voltage plus 1000V. Satisfactory testing will indicate no leakage breakdown current for the duration of the test. Dielectric Withstand Testing must consist of the following test for each switch:

1) With switch “closed”, across switch and operator shaft.

2) With switch “closed”, across switch and base mounting bolts or other metal exposed to exterior of enclosure.

3) With switch “open”, across ‘jaw’ and ‘hinge’ sides. If multiple switch modules operate as a single device (example: two pole), test each module separately.

c. Electric Resistance of Current Path:

1) The function of this test is to demonstrate that there is a minimum resistance to current flow across the conducting parts of the disconnect switch.

2) With the switch “closed”, apply test probes to the ends of ‘jaw’ and ‘hinge” contacts. The resistance must meet or exceed design test reading for the same or similar type of switch.

7. Poles:

a. Testing must be in accordance with Section 34 23 13 - Overhead Contact System Steel Poles.

8. Constant-tension spring terminations.

a. Submit a certified test report for each unit provided to the contract including spares.

1) Demonstrate that the system is calibrated to maintain constant tension over the specified temperature range and environmental conditions for each model to be used.

2) Demonstrate that each model to be used is corrosion resistant.

b. Pack a copy of test report with each unit.

PART 3 - EXECUTION

3.01 MECHANICAL TESTS

A. Upon completion of each OCS line section installation, verify physical integrity of the complete system.

B. Visual Inspection: From ground level, verify the following:

1. OCS components are correctly installed.

2. Contact wire poles are vertical.

3. Tunnel supports and cantilevers are correctly positioned and have correct along track offset.

4. Steady arms are correctly positioned.

5. Hangers are plumb and within design position.

6. Feeder disconnect switch operating mechanisms operate freely and correctly and switch-blade position corresponds to handle position.

7. Wire runs are tensioned to within specified tolerance, if tensioned by means of a constant-tension spring termination.

8. Integrated position-gauges of the constant-tension spring terminations are in the proper position indicated in the manufacture's temperature chart for that wire run length, tension, and wire temperature.

9. Turnbuckles at the constant-tension spring terminations are set to the correct position to allow for wire adjustment to account for permanent wire stretch over the 30 year design life of the wire runs.

10. Midpoint anchor tie wires are taught and balanced. Along track movement of midpoint assembly is 0 inches.

C. Hands on inspection: From contact wire level check for the following and remedy any unsatisfactory conditions detected:

1. Fit and tightness of components.

2. Split pins and locknuts are secure and in proper location.

3. Contact wire is free of kinks, twists, nicks or damage.

4. Stranded wires are free of damage to strands.

5. Steady arm heel settings and fittings are correct.

6. Jumpers are of the correct type, have adequate travel capability, are properly fitted and are well formed to avoid fatigue failure.

7. Hinge fittings have freedom to move under load.

8. Clearance and insulation between adjacent or crossing contact wires meet specification requirements.

9. No interference with passage of pantographs, including spots where pantographs could tangle with wires or suspension assemblies.

D. From the Ground: Contractor must make the following checks:

1. Check that disconnect switch operating handles function correctly and name plates are correctly positioned.

2. Check that the disconnect switches operate easily and that the blades open and close smoothly without sticking.

E. Clearance Tests:

1. Electrical and Mechanical Clearance:

a. Use a rail mounted height and stagger gauge having the appropriate pantograph clearance envelope.

b. Electrical:

1) Measure the electrical clearance from the vehicle pantograph and energized parts of the OCS to non-energized or grounded components or structures.

c. Mechanical:

1) Measure the mechanical clearances from the pantograph to OCS support components such as the heels of steady arms and drop brackets.

2) Measure the mechanical clearances from the pantograph and OCS to fixed structures.

3) Make corrections for temperature, for fixed termination catenary and for uplift of the conductors.

4) Clearances must be equal to or exceed minimum values as specified.

5) Adjust portions found to have insufficient clearance to provide the required clearance.

2. Vehicle Mechanical Clearances to OCS Supports (excluding Pantograph):

a. Perform vehicle clearance test using a rail mounted clearance gauge.

b. Base clearances on the LRV clearance diagram and clearance tables in the Sound Transit Design Criteria Manual appropriate to the section of track being checked and allowing for track curvature, superelevation and track tolerances.

c. Resident Engineer will provide specific clearance measurements appropriate to section of track being measured. Equipment must be clear of the clearance gauge by a minimum of 3 inches.

d. The clearance from face of any OCS structure to track centerline must be measured at each structure and compared to the vehicle dynamic envelope dimension for the track curvature and superelevation, at that location.

e. Each part of the OCS structure including pole, switch operating mechanism, cables and cable cleats, etc., which is lower than the LRV roof line must be clear of vehicle envelope by a minimum of 6 inches to allow for pole rake, track tolerances and mechanical running clearance.

3. OCS pole mounted, manual, no load break dc disconnect and dc bypass switches:

a. A mechanical operation test must consist of the following:

1) Fully Open disconnect.

2) Fully Closed disconnect.

3) Verify there are no signs of binding, galling, uneven wear or other physical tolerance issues.

4) Verify blade alignment evenly makes on either side of jaw terminal.

5) All mechanical linkages for manual operating handle assemblies must move freely and not hinder operation of disconnect.

6) Each disconnect must be cycled no less than 10 times.

3.02 ACCEPTANCE MEASUREMENTS

A. Prior to conducting field installation tests, verify that OCS equipment is installed according to these Specifications and is in operable condition, and verify physical integrity and quality of workmanship of system installation.

B. Perform only on a completed line section after acceptance of Mechanical Tests A, B, C, D, and E by Resident Engineer.

C. Measure the following in the presence of the Resident Engineer using equipment suitable for obtaining correct measurements:

1. Contact Wire Height: Distance from contact wire to a line defined by top of both rails at point of measurement (inclined reference point).

2. Messenger wire height.

3. Stagger:

a. Distance from contact wire to super-elevated centerline of track measured at support location.

b. Measure stagger to nearest 1/2 inch.

c. Record as L (left) or R (right) when viewed in direction of increasing stationing.

4. Cross Level (Superelevation):

a. Difference between elevations of two rails measured at the structure location.

b. Measure using level and tape measure.

5. Midspan Offset: Same as stagger except taken at midspan.

6. Midspan Contact Wire Height: Height of contact wire at midspan.

7. Midspan Cross Level: Measure at midspan.

8. In-Running Contact Wire Height: Height of in-running contact wire at overlaps and turnouts.

9. Out-of-Running Contact Wire Height: Height of out-of-running contact wire at overlaps and turnouts.

D. Compute the following Using Measurements Taken:

1. Sag:

a. Compute halfway between structures.

b. Average of contact wire height for previous and next point of attachment minus midspan contact wire height.

2. Gradient (Rate of Change of Contact Wire Height):

a. Compute between structures.

b. Compute as difference between contact wire height at 2 adjacent supports divided by distance between supports.

E. Submit and obtain approval for an OCS Acceptance Measurements test data form before tests are scheduled, containing the following information at a minimum:

1. Date: Provide space to enter date measurements were taken.

2. Wire Run Number: Designation shown on Contract drawings.

3. Track: Designation shown on Contract drawings.

4. Equipment Style: The style of catenary being measured.

5. Drawing Number: OCS layout Contract drawing.

6. Names: Contractor's representatives and Sound Transit representative.

7. Page Number: "Page X of XX" where XX is the total number of pages for a wire run.

8. OCS Type: Type of OCS being measured.

9. Measuring Equipment: Description of equipment used.

10. Conductor Temperature: At time of wire measurements in degrees F:

a. This measurement must be monitored by the use of a dial-type thermometer inserted into a hole bored lengthwise into a 10 foot length of contact wire.

b. The thermometer contact wire assembly must be held under the same ambient conditions as those experienced by the installed OCS.

11. Air Temperature: At time of wire measurements in area of measurements in degrees F.

12. Support structure number.

13. Support Structure Stationing: As shown on Contract drawings.

14. Structure Set Out (Pole Face to Rail Distance): Measured distance from the pole to abutment face to track centerline, taken with tape measure.

15. Foundation Height: Measured height from top of foundation to top of near rail, positive for above rail, negative for below rail.

16. Cross Level (Superelevation):

a. Difference between elevations of the 2 rails measured at the structure location.

b. Record as L (left) or R (right) for the direction the track is tilting, or side of track with the low rail, when viewed in the direction of increasing stationing.

17. Stagger:

    a. Distance from the contact wire to the super-elevated centerline of the track measured at the support location. This measurement must be taken using a catenary position measurement device.

    b. Stagger must be recorded as L (left) or R (right) when viewed in the direction of increasing stationing. Record stagger to nearest 1/2 inch.

18. Contact Wire Height: Distance from the contact wire to a line defined by the top of both rails at the point of measurement (the inclined reference point).

19. Midspan Offset:

    a. Same as “Stagger” above, except taken at midspan.

    b. Same sign convention applies.

20. Midspan CW Height: Same as “CW Height” above, except measured at midspan.

21. Midspan Cross Level:

    a. Same as “Cross Level” above, except measured at midspan.

    b. Measurement must be taken using level and tape measure.

22. Sag: The computed average of “CW Height” for the previous and next structure minus midspan contact wire height between the structures.

23. Gradient:

    a. Rate of change of contact wire height.

    b. Computed as the difference between contact wire height at 2 adjacent supports divided by the distance between the supports.

24. Span Length: Along track distance between two OCS supports calculated from as built insert or foundation stationing.

25. In-Running Contact Wire Height: Height of in-running contact wire at overlaps and turnouts.

26. Out-of-Running Contact Wire Height: Height of out-of-running contact wire at overlaps and turnouts.

27. Constant-Tension Spring Terminations:

    a. Termination height of each system component.

    b. Integrated gauge positions.

    c. Turnbuckle positions.

    d. Tension-verification readings via dynamometer of approved equal.

28. Spaces to enter required measurements and computed values.

29. Remarks, as necessary.

F. Design Compliance:

1. Resident Engineer will use acceptance measurements to determine compliance with design and will inform Contractor of necessary corrections to be performed.

2. Contractor must execute corrections.

3. After execution of corrections, re-measure and record affected data and submit results to the Resident Engineer.

4. Acceptance measurements will not be considered complete until corrections are made and approved by the Resident Engineer.

3.03 ELECTRICAL TESTS

A. General:

1. Test procedures for Continuity, Loop Resistance, and Hi-Pot tests must include diagrams showing which OCS sections will be tested, where grounds will be placed, where jumpers will be placed, and test equipment locations.

B. Continuity and Loop Resistance Test:

1. General:

a. The continuity and loop resistance tests serve the following purposes:

1) Verify that the electrical circuits are continuous from the TPSS out to the OCS and back through the rail to the TPSS.

2) Confirm that the feeder cables are landed correctly in the TPSS and on the correct OCS section prior to Dielectric testing.

3) Establishes the baseline loop resistance for future comparisons to determine if loop resistance is degrading.

2. Cross bond bolt connections used for negative returns and signal track circuits shall be inspected and approved by the RE prior to performing continuity and loop resistance testing.

3. Following mechanical test and acceptance measurements and with the OCS section de-energized, make a series of loop resistance and continuity tests to prove the continuity of each section of OCS and track in the area.

4. Each OCS test section must be formed by shorting the OCS to the track with jumpers at one end of the test section (see Figure 3.1, below). In double track sections, test the individual OCS-track sections separately.

5. Provide a 12 V battery, current measuring shunt, voltmeter, ammeter, and switch and measure voltage and current.

6. Take three measurements for each test section and record the results. Average the results of the three measurements. Measurements must be stable for 3 seconds in order to record.

7. A passing test must constitute a nominal loop resistance not exceeding 0.1 ohm per mile of single track OCS construction. Investigate and correct the cause of higher loop resistance values.

Figure 3.1

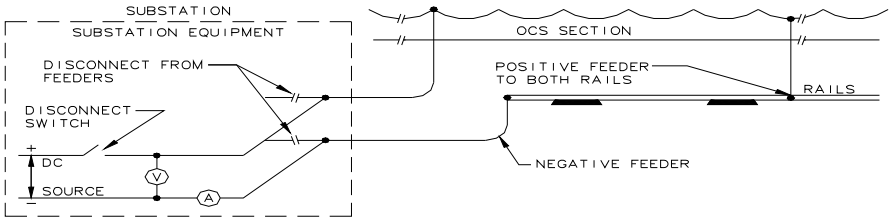

CONNECTION FOR THE DC LOOP RESISTANCE TEST
(CONTINUITY TEST)

C. Dielectric Test:

1. Following successful loop resistance and continuity test and with the OCS section de-energized and with any surge arrestors disconnected, the Contractor must connect a 1000 V megger between the OCS and the rail at one end of each test section as shown in Figure 3.2, below.

2. The resistance in each test must be recorded on a table.

3. A resistance value of greater than five M ohms is required to be obtained before continuing with the tests described in the Hi-Pot Insulation Testing Section.

4. The Contractor must replace the 1000 V megger with a dc hi-pot test set and test for leakage current as described in the Hi-Pot Insulation Testing Section.

D. Hi-Pot Insulation Testing:

1. General:

a. Hi-pot testing through closed disconnect switches is prohibited.

b. Lightning arresters must be disconnected during the hi-pot test.

c. Perform a dc hi-pot test on discrete sections of OCS 1 to 2 miles in length. The hi-pot tests serve the following purposes:

1) Checks components such as insulators and feeders for leakage.

2) Verifies the electrical withstand of section insulators and disconnect switches.

3) Provides a baseline for periodic checks of insulation level of OCS sections, by comparing voltage and leakage current with previously measured values.

4) A nominal dc hi-pot voltage of 4.5 kV must be used for the test. Hi-pot tests must be carried out on the OCS sections as soon as possible after the dielectric and continuity tests have been completed, in order to ensure that all of the section being tested is electrically continuous and is subjected to the test voltage.

Leakage currents between zero and 5 mA may be expected for section lengths of one to two miles.

2. Safety Precautions:

   a. The hi-pot test requires application of high voltage to the OCS. Proper regard must be paid to safety.

   b. Clearly identify test zones.

   c. Personnel not directly associated with the tests must be kept clear of the tracks.

   d. Ground OCS sections adjacent to the section under test.

   e. Hi-pot testing through closed disconnect switches is prohibited.

   f. Lightning arresters must be disconnected during the hi-pot test.

3. Test Parameters:

   a. Test Equipment: DC hi-pot unit.

   b. Test Voltage: 4500 V.

   c. Maximum Leakage Current: 5 mA per mile at 4500 V.

4. Test Procedure:

   a. Apply DC voltage to the OCS section in 500 V steps up to 4500 V.

   b. At each 500 V step, allow 1 minute to pass to stabilize the level of leakage current.

   c. Hold the test voltage of 4500 V for 60 seconds.

   d. Record the leakage current at each value on a test data sheet.

   e. Record weather conditions and temperature.

   f. Investigate the cause of leakage currents in excess of 5 mA per mile, or unstable current readings.

FIGURE 3.2

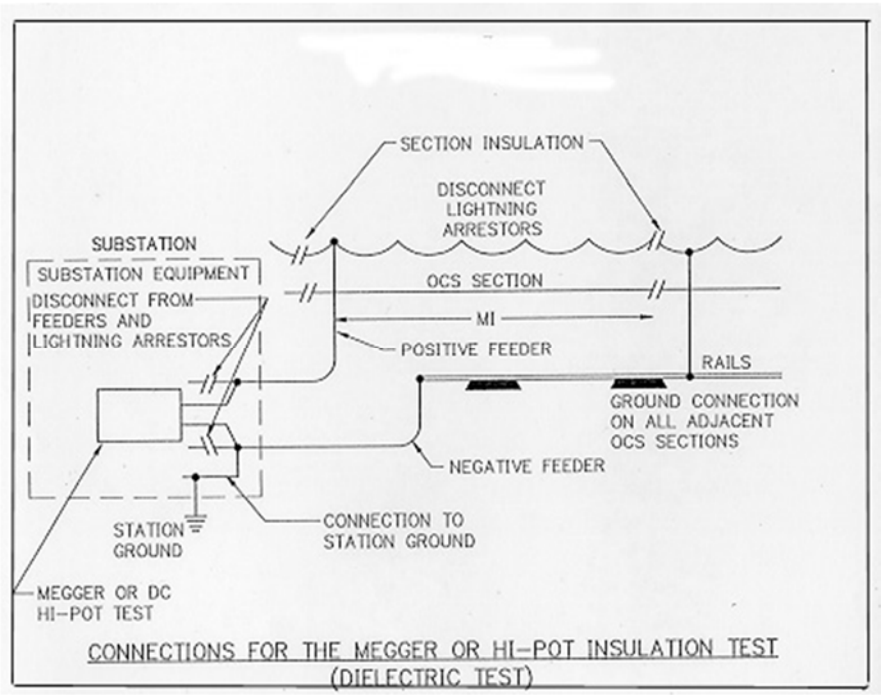

E. Ground Resistance Measurements for Surge Arrestors:

1. General: Each contractor must be responsible for testing grounding facilities that they installed. Prior to acceptance, the ground resistance of the ground connections for the surge arrestors must be measured and recorded in accordance with the test procedure. Grounds for surge arrestors with a ground resistance measurement greater than 5 ohms must be supplemented by adding ground rods until a grounding resistance of 5 ohms or less is achieved.

2. Procedure:

   a. Connect the megger as shown in Figure 3.3. Note that the lead from P1C1 should be as short as possible and that the electrodes and the ground rod must be in a straight line. It is not essential for the electrodes to be parallel to the track, but this configuration may be the most convenient.

   b. Position the electrodes at distances as shown in Figure 3.3 test position 1, i.e. with x = 66 feet y = 105 feet. To ensure acceptance values of resistance, the ratio of distance (x/y) must be approximately 62 percent. Insert current and potential electrodes into the earth to about 6 to 10 inches. For very dry soil pour water around the current electrode. Measure and record the resistance.

FIGURE 3.3

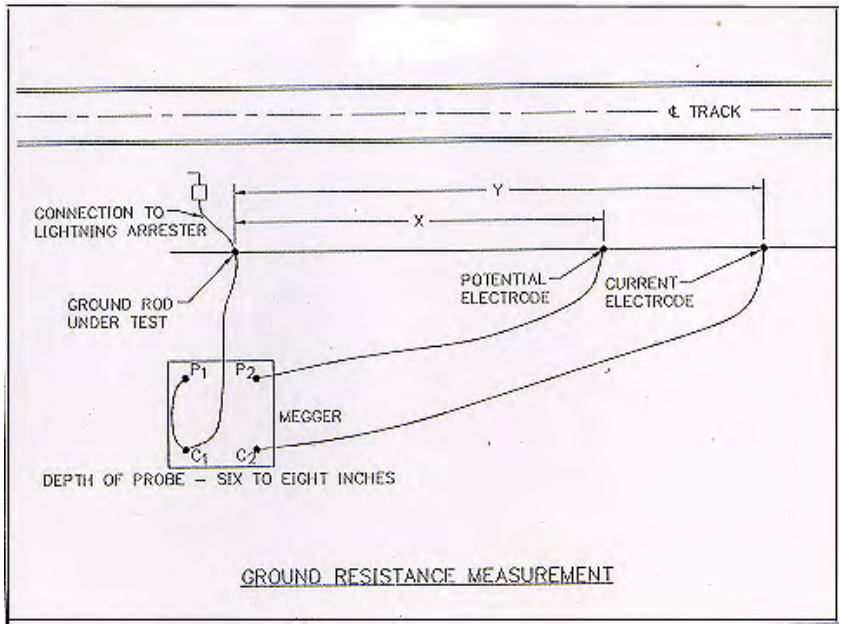

c. Keeping the x dimension the same as in step b, reposition the current electrode to y + 6 feet. Measure and record the resistance.

d. Compare the resistance values obtained in steps 2 and 3. If the readings obtained are within 5 percent of each other, no further measurements are required and the average value should be used as the actual resistance. If the readings differ by more than five percent, increase x by 10 feet and make y equal to (x + 10) /0.62 approximately. Repeat steps two, three and four as necessary.

e. Repeat this procedure for each surge arrester location for which a ground resistance measurement is required.

f. A measured ground resistance value of 5 ohm or less is considered acceptable.

3.04 OCS ENERGIZATION TEST

A. In conjunction with the traction power substation testing energize each electrical section of the OCS under the direction of Resident Engineer.

B. Test each section to determine proper functioning of each disconnection device including switches and circuit breakers.

C. Test each section to verify separation of sections by section insulators or overlaps.

3.05 SYSTEM INTEGRATED TESTS

A. Upon completion of the Acceptance Measurements, Mechanical Tests, Clearance Tests, and Electrical Tests, initiate a low speed de-energized LRV test run to confirm acceptable pantograph performance.

B. Perform a visual inspection of the pantograph interface to the wire in conjunction with the Resident Engineer.

1. Demonstrate that pantograph passing electrical clearances are adequate, that there is no physical interference with pantograph movement, and that pantograph security is sufficient.

2. During this test, Contractor must have available plant, equipment, and labor able to perform minor modifications to the OCS equipment.

3. Contractor must supply pantograph clearance cart with the appropriate pantograph clearance envelope for testing.

C. Video Test:

1. Camera Mount: Mount camera securely such that the video image is stable under testing conditions. Focus video image on the working range of the pantograph carbon. Make markings on the edge of the carbon strip to visually denote staggers of 0 inches, 6 inches, 9 inches, and 12 inches.

2. CCTV Camera: Lightweight, metal body, digital, color, 120 V power, wide angle lens.

3. Video Recorder: Digital, color.

4. Cabling: Video and power cable sufficient to connect pantograph mounted camera to video recorder inside LRV.

5. Perform tests to verify the following:

a. No visible contact losses between the vehicle pantograph head and the contact wire.

b. Acceptable wire tracking up to the maximum permissible speeds under normal operating conditions.

c. Pantograph passing electrical clearances are adequate.

d. No physical interference with pantograph movement.

e. Specified pantograph security.

f. No arcing as pantograph transverses OCS.

END OF SECTION

SECTION 34 23 79

OVERHEAD CONTACT SYSTEM CAPITAL SPARE PARTS AND MAINTENANCE EQUIPMENT

PART 1 - GENERAL

1.01 SUMMARY

A. Section includes:

1. Requirements for the quantity and type of spare parts for Overhead Contact System.

1.02 SUBMITTALS

A. Submit

1. List of required spare parts.
2. List of required special tools and test equipment.
3. List of additional recommended spare parts.

1.03 DELIVERY, STORAGE AND HANDLING

A. Delivery of Spare Parts:

1. Furnish Resident Engineer notice of delivery, a minimum of three Days before delivery.
2. Do not ship spare parts until authorized by Resident Engineer.
3. Spare parts to be delivered to a location designated by Sound Transit.
4. Package and label spare parts in moisture-proof containers suitable for shipment and storage. Attach copies of shipping list in the package and to the exterior of the package.
5. Unload the spare parts in a manner that will prevent damage to the packages and the contents. Sound Transit will open the packages and inspect spare parts for damage. Damaged parts will be returned to the Contractor to be replaced with undamaged parts and materials, at no additional expense to Sound Transit.
6. Cable must be delivered on reels constructed of metal or of equivalent durable material (wood reels are not acceptable).

PART 2 - PRODUCTS

2.01 REPLACEMENT PARTS

A. Capital Spare Parts: Include required spare parts and parts ordered by Sound Transit.

1. Supply a spare parts list with Sound Transit part designation and manufacturer's part number.
2. Provide a fixed unit price that is valid for one year after delivery for each part on the required spare parts to be furnished under the Contract.
3. Beyond one year, part costs are to be escalated in accordance with mutually agreed upon indices.

B. Spare Parts for Warranty Repairs:

1. The required spare parts or the spare parts ordered by Sound Transit for support of operations are not to be used by the Contractor for warranty repairs and/or warranty parts replacements.

2. Sound Transit will not be responsible for receiving or storing any parts for warranty support.

3. At the end of the warranty period, Sound Transit may consider a negotiated price for purchase of parts stocked by the Contractor for warranty support.

C. Availability of Replacement Parts:

1. Guarantee parts availability for a period of 10 years from Contract award date.

2. Provide the detailed manufacturing drawings to Sound Transit at the end of the 10-year period or when the availability of parts ceases if within 10 years of the Contract award date.

D. Special Tools and Test Equipment:

1. Provide special tools and test equipment.

2. Special tools include but are not limited to fixtures, equipment, gages, hand tools, power tools, motors, or other tools and equipment necessary to troubleshoot, maintain, repair, overhaul, assemble and disassemble the overhead contact system (OCS) that are not commonly available from commercial tool suppliers.

2.02 REQUIRED SPARE PARTS

A. Provide Required Spare Parts as listed. This list must be reviewed by ST prior to purchase to allow type and quantity changes for equivalent value of materials.

1. Provide 1 of each OCS pole type and size included on the project.

2. Provide 2 of each assembly type supplied on the Project.

3. Conductors:

a. 5000 linear feet contact wire.

b. 5000 linear feet messenger wire.

c. 200 linear feet jumper cable.

2.03 RECOMMENDED SPARE PARTS

A. Furnish a list including description, part number, quantity and unit price of contractor or manufacturer recommended spare parts. Sound Transit may or may not exercise purchase of the recommended Spare Parts.

1. Provide a fixed unit price that is valid for one year after delivery for each part on the required and recommended spare parts list above and beyond the required spare parts list to be furnished under the Contract.

2. Beyond one year, part costs are to be escalated in accordance with mutually agreed upon indices.

PART 3 - EXECUTION (NOT USED)

END OF SECTION

SECTION 34 25 00

TPSS CAPITAL SPARE PARTS AND MAINTENANCE EQUIPMENT

PART 1 - GENERAL

1.01 SUMMARY

A. Section includes:

1. Requirements for the following:

a. The quantity and type of spare parts to be provided by Contractor.

b. Spare parts and maintenance equipment.

1.02 REFERENCES

A. Definitions

1. Set: The quantity of the stated part that is provided as part of one substation.

2. Assembly: A unit consisting of components or parts that have been fitted together to form a self-contained device or fixture.

1.03 SUBMITTALS

A. Submit:

1. List of mandatory spare parts.

2. List of mandatory special tools, test and maintenance equipment for each TPSS.

3. List of additional recommended spare parts, special tools, and test and maintenance equipment. Recommended special tools, test and maintenance equipment that can be shared by substations must be listed separately.

4. Provide part numbers for each part, including a detailed breakdown of each spare part assembly and set.

1.04 DELIVERY, STORAGE AND HANDLING

A. Delivery of Spare Parts:

1. Furnish Resident Engineer notice of delivery, a minimum of three days before delivery.

2. Do not ship spare parts until authorized by Resident Engineer.

3. Spare parts to be delivered to a location designated by Sound Transit.

4. Package and label spare parts in moisture-proof containers suitable for shipment and storage. Attach copies of shipping list in the package and to the exterior of the package.

5. Unload the spare parts in a manner that will prevent damage to the packages and the contents. Sound Transit will open the packages and inspect spare parts for damage. Damaged parts will be returned to the Contractor to be replaced with undamaged parts and materials, at no additional expense to Sound Transit.

6. Cable must be delivered on reels constructed of metal or of equivalent durable material (wood reels are not acceptable).

PART 2 - PRODUCTS

2.01 REPLACEMENT PARTS

A. Mandatory Capital Spare Parts:

1. Provide a fixed unit price that is valid for one year after delivery for each part on the required and recommended spare parts list and beyond the required spare parts list to be furnished under the Contract.

2. Beyond one year, part costs are to be escalated in accordance with mutually agreed upon indices.

B. Spare Parts for Warranty Repairs:

1. The capital spare parts or the spare parts ordered by Sound Transit for support of operations are not to be used by the Contractor for warranty repairs and warranty parts replacements. Sound Transit will not be responsible for receiving or storing any parts for warranty support.

2. At the end of the warranty period, Sound Transit may consider a negotiated price for purchase of parts stocked by the Contractor for warranty support.

C. Availability of Replacement Parts:

1. Guarantee parts availability for a period of 10 years from Contract Award.

2. Furnish the detail manufacturing drawings to Sound Transit at the end of the 10 year period or when the availability of parts ceases after that date.

2.02 MANDATORY SPECIAL TOOLS, TEST AND MAINTENANCE EQUIPMENT

A. Special tools include but are not limited to fixtures, equipment, gages, hand tools, power tools, motors, or other tools and equipment necessary to troubleshoot, maintain, repair, overhaul, assemble and disassemble the TPSS that are not commonly available from commercial tool suppliers.

B. Provide one set of mandatory special tools, test and maintenance equipment for each TPSS and section tie breakers to perform corrective and preventative maintenance operations. Tools must consist of those required to disassemble, adjust, and reassemble components. For all maintenance functions, standard tools, wrenches, etc. commercially available are not required.

C. Specified Special Tools:

1. Refer to each technical specification section for detailed information.

2.03 MANDATORY SPARE PARTS

A. Table in Part 3 lists mandatory spare parts.

B. For example, if the part is “LEDs for Dc Switchgear,” and 1 substation has 2 red LEDs, 2 green LEDs, and 1 white LED for Dc Switchgear, regardless the types and quantity of Dc Switchgear, then 4 sets consists of 8 red LEDs, 8 green LEDs, and 4 white LEDs.

C. The mandatory spare parts list must be reviewed by ST prior to purchase to allow quantity changes or substitute for recommended spare parts within equivalent value of materials.

2.04 RECOMMENDED SPARE PARTS

A. Furnish list, description; breakdown part number and list, recommended quantity and unit price of spare parts, special tools, test and maintenance equipment recommended in submittal. Sound Transit may or may not exercise purchase of any or all of the recommended items.

2.05 SCHEDULES

A. Mandatory Spare Parts:

Item	Description	Quantity
1	Rectifier Diodes	15
2	15 kV/26kV Draw out Circuit Breaker member compete with all hardware and devices including truck, if TPSS breaker is a different manufacturer than ac substation breakers	1
3	12.5 kV/26kV Revenue Class PT and CT’s	3 sets each
4	Rectifier Diode Protection Fuses	15
5	ANSI CIRCUIT 31 Interphase Transformer	1
6	Dc 6000 Amp Main Positive Circuit Breaker Element with Truck and Accessories	1
7	Main Contacts for 6000 Amp Dc Circuit Breaker	1 assembly
8	Secondary Contacts for 6000 Amp Dc Circuit Breaker	1 assembly
9	6000 Amp Negative Disconnect Switch	1 assembly
10	Diode Temperature Monitors	7 assemblies
11	33 Switches (Micro Switches)	20 assemblies
12	12.5 kV/26.kV Traction Power Transformer and temperature monitor *	1 assembly*
13	Auxiliary Transformer 12.5 kV/26kV	1
14	Dc 4000 Amp Feeder Circuit Breaker Element Complete with Truck and Accessories	5
15	Main Contacts for 4000 Amp Dc Circuit Breaker	15 assemblies
16	Secondary Contacts for 4000 Amp Dc Circuit Breaker	15 assemblies
17	1500 Vdc Protective Relays – of each type	2
18	1500 Vdc Switchgear Control and Auxiliary Relays – of each type	2
19	Rail Voltage Monitoring and Grounding System	1 set
20	1500V Dc Circuit Breaker Charging Motors	4

Item	Description	Quantity
21	1500V Dc Circuit Breaker Solenoids – set	4
22	1500V Dc Circuit Breaker Springs – set	4
23	LEDs for Dc Switchgear	4 sets
24	Ac and Dc LV Circuits' Fuses for Dc Switchgear	40
25	Dc Transducer – 4000 Amp.	4 sets
26	Dc 4000 Amp Disconnect Switch Assembly	1 each type
27	Battery Charger	1 set each type
28	Battery Cells	4
29	Local Centralized Monitoring System IC and HMI	1 set
30	Dc Transducer – 6000 AMP	1
31	Substation wide LV Ac and Dc Contactors (including control	2 sets
32	1500 Vdc Indicating Meters	1 set
33	Electro-Mechanical Interlocks – each type	1 set
34	Load Measuring Resistors	30
35	Load Measuring Contactor	5

*** No spare is required if the installed assembly is electrically and physically interchangeable with existing ST system.**

PART 3 - EXECUTION (NOT USED)

END OF SECTION

SECTION 34 42 01

SIGNAL SYSTEM DESIGN

PART 1 - GENERAL

1.01 SUMMARY

A. Section includes:

1. Requirements for the following:

a. Design Signal System in conformity with Contract Documents.

b. Manufacture Signal System in conformity with Contract Documents.

c. Install, adjust, test, and maintain Signal System as provided in Contract Documents.

d. Provide spare parts, special tools, and test equipment.

e. Furnish documentation and drawings necessary to support operation, maintenance, and repair of Signal System.

f. Provide technical support required to verify proper operation of Signal System.

g. Train Sound Transit personnel in operation and maintenance of Signal System and provide training aids and materials for future use as specified.

h. Provide technical support and replacement parts during the warranty period.

i. Design, install and test a safe and reliable Signal System, independent of other requirements of these Specifications and Issued for Construction (IFC) Drawings. Contractor will provide a Safety Certificate for the Signal System upon completion of all testing, validation, and verification activities. The Safety Certificate will state that the Signal System is safe for revenue service operation.

j. Modify existing Sound Transit Link Light Rail Signal System as specified. See Section 34 42 32 - Existing Signal System Modifications for details.

1.02 REFERENCES

A. This Section incorporates by reference the latest revisions of the following documents:

1. American Railway Engineering and Maintenance-of-Way Association (AREMA):

a. Communications and Signal Manual of Recommended Practices.

2. Sound Transit Design Technology Manual:

a. Section 12 – Record Drawings

1.03 SUBMITTALS

A. Location Book of Plans and SVP equivalent circuits: as required in the Contract Documents on interlocking requirements.

B. Shop Drawings:

1. Generally:

a. Show views, layouts, and interfaces to fully describe system and installation.

b. Where applicable, identify standards such as AREMA Communication and Signals Manual of Recommended Practices which are met.

c. Provide fully dimensioned plan, elevation, and cross-section views for layouts, mechanical equipment, and hardware as necessary to show information.

C. Wayside Drawings:

1. Product Drawings: Show dimensions and internal mechanical and electrical details of particular pieces of equipment or assemblies. Include title of particular piece or type of equipment shown.

2. Installation Drawings:

a. Drawings on which detailed information is shown for mechanical installation of signal equipment such as signal rooms, signal layouts, switch machine layouts, TWC equipment, track circuit equipment, and their interfaces with associated equipment and structures.

b. Identify any dimensions to be determined in the field, identify hardware (including part numbers), and provide installation procedures necessary to perform installation.

c. Provide details on special installations not suitable for typical installation.

d. Identify interfacing Work to be performed by Contractor.

e. Single line Drawing of entire signal system

3. Printed Circuit Board Drawings: Drawings showing complete physical printed circuit board layout at actual size, component listing, and circuit schematic.

4. Material Lists: Drawings showing accurate and complete material lists for assemblies, subassemblies, and components.

D. Single Line Diagram

1. Including: Track Circuit names, Mileposts, Radius and Elevation, and Curve data.

E. Drawings submitted must follow Design Technology Manual standards.

1.04 QUALITY ASSURANCE

A. Qualifications:

1. Manufacturer Qualifications: Manufacturer of wire and cable and the wire and cable itself must have proven service histories as required by Section 34 42 08 External Signal Cable.

B. Preconstruction Testing:

1. Circuit Check:

a. Perform a circuit check of circuit drawings for each signal room signed by circuit designer and circuit checker.

b. Circuit checker must be independent of circuit design effort.

c. Perform a functional and safety check of signal processor programming by a qualified person, other than the designer. Signal processor programming check must utilize a simulator capable of simulating all LCP requests and indications, TWC request, outputs to signals or numerical signs. track circuit inputs and switch machine inputs and outputs.

PART 2 - PRODUCTS

2.01 PERFORMANCE REQUIREMENTS

A. Performance / Design Criteria:

1. Provide signal equipment used in similar railroad or rail transit service. Use this history to prepare a suitable design for this application.

2. Provide components, subassemblies, and assemblies that are new and of a design with a history of at least 2 years of successful revenue service operation.

3. The following signal equipment must have a history of at least 5 years on at least three different railroad or rail transit properties in North America unless otherwise approved by Sound Transit:

a. Vital relays.

b. Vital processors.

c. Non-vital processors.

d. Switch machines

e. Impedance bonds.

f. Track circuits.

g. Frequency converters.

h. Batteries.

i. Battery chargers.

j. Power supplies.

k. Ground Detectors.

l. UPS.

B. System Requirements:

1. In this Section, the terms "restrictive" and "permissive" are used in connection with binary outputs of two position components or subsystems and denote such alternatives as:

a. Stop or proceed.

b. A lower speed or a high speed.

c. Deceleration or acceleration.

d. Brakes applied or brakes released.

e. Actuation of alarm or no actuation of the alarm.

2. Design Signal System such that no subsystem malfunction or component failure causes an unsafe condition. Design Signal System to ensure a restrictive, rather than a permissive, condition will result from component or system failures.

3. Design system safety apparatus such that single independent component or subsystem failure results in a safe condition.

4. Design Signal System such that broken wires, dirty or high resistance contacts, a relay failing to respond when energized, a loss of power supply energy, or combinations of these failures do not result in unsafe conditions.

5. Design Signal System to impose a restriction and/or actuate an alarm whenever a device fails to assume its most restrictive position when conditions require that it should.

6. Consider dependent failures (those failures which in turn always cause others) a single failure. Design Signal System such that dependent failures do not cause an unsafe condition.

7. Design Signal System and select components with LRV safety as the primary consideration. Utilize only components that have predictable failure modes and have been used on similar transit properties.

8. Verify safe design in accordance with the System Safety Program Plan as required by Section 01 46 00 - Safety and Security Hazard Management – Design Build.

9. Verify reliable design in accordance with the System Reliability Program as required by Section 34 42 95 - Signals Reliability Program.

10. Design wayside signals not to display a more permissive aspect from that intended because of a burnt-out LED or broken wire. A dark signal indicates the most restrictive signal aspect.

11. Signals must be installed in accordance with AREMA MP 2.1.1 Recommended Guidelines for the Application of Fixed Signals. Contractor will provide a signal sighting report to verify sighting distances to signals to ensure adequate braking distances when approaching signals. The signal sighting report must l take into consideration all civil, structural, mechanical, and other potential obstructions to ensure adequate sighting of all signals.

12. Do not mix non-vital and vital contacts in safety circuits except when non-vital contacts are located at the head end of positive, negative, or both feeds to relay coils.

C. Life Cycle Requirements:

1. Provide a Signal System with an expected service life of 30 years at the specified level of service.

2. Achieve this useful life through the use of off-the-shelf proven hardware.

3. Design each major component, subassembly, and assembly of Signal System to have functional and physical interchangeability of replacement spare parts.

D. LRV Operations

1. Vehicle operations will be performed by operators from a selected lead cab.

2. The Train Operator (TO) may regulate to speeds below Automatic Train Protection (ATP) maximum or initiate braking at any time.

3. Provide LRV Signal layouts in accordance with Section 34 42 17 - LRV Signal Layouts, at interlockings and vent zones to govern movement.

E. Operating Modes:

1. ATP Mode:

a. Provide ATP Mode system operation with cab signals.

b. The TO will regulate below ATP speed limit.

c. If the TO does not comply with an ATP speed limit, the carborne ATP will automatically apply service brakes and the TO will need to acknowledge by moving the LRV's speed brake control lever to brake position.

d. In an event of service brake failure, brake assurance logic will apply emergency brakes.

2. Street Running Mode:

a. Street Running Mode area is designated on IFC Drawings.

b. Carborne ATP package will enforce a 25 or 35 mph overspeed limit in this mode, as designated on the IFC Drawings. Street running code will be provided by track circuit in street running zone.

c. LRV operator will regulate to posted speed within this limit.

d. In this mode, LRV movements are governed by LRV signals.

e. If no speed code exists, the operator has the capability to select 35mph Street Running Mode from a pushbutton on his lead cab console.

f. This mode is used as the backup mode to proceed with LCC authorization through a failed track circuit or a signal at stop.

3. By-Pass Mode will allow the TO to by-pass Carborne ATP equipment in event of an ATP package failure.

4. Reverse Running:

a. Provide Bi-Directional Operation with following moves.

b. Provide turn back capability at emergency crossovers, and temporary terminals with full signal protection.

c. At designated locations, Train to Wayside Communications (TWC) must be made available to request turnback operations.

d. Control input to Reverse Running moves must be from LCC or local control panel (LCP).

F. Circuit Requirements

1. Circuit Design: In accordance with AREMA Communications and Signal Manual, Part 16, Vital Circuit and Software Design, and Contract Documents.

2. Design Signal System based on closed circuit principles. Redundancy is not an acceptable method of achieving design safety.

3. Design equipment containing circuitry affecting safety to include mechanical and/or electrical keying to prevent improper insertion or interchange.

4. Keep safety circuits free of grounds that result in a flow of current equal to, or in excess of, 75 percent of release value of safety devices in the circuit.

5. Design wiring of circuits and grounds so that equipment removal does not create a hazard.

6. Vital Circuits:

a. Provide positive-energy, single-break type vital interlocking circuits in signal equipment housings.

b. Design circuits not confined to one room to be double-wire and double-break, except signal lighting circuits.

c. Construct vital circuits using vital relays, vital relay timers, and vital solid-state components.

d. Provide vital timer for loss of shunt for all track circuits.

G. Traffic Locking:

1. Design traffic direction locking between interlockings for each track as a vital signal processor function.

2. Design traffic circuits to maintain last locked direction until a valid request reverses direction. Use vital magnetic stick relays so that traffic circuit direction is preserved even in the event of a power loss or signal processor malfunction.

3. Lock traffic when any of the following conditions exist:

a. A track circuit between opposing signals is occupied.

b. A route is requested into traffic section.

c. The opposing route is locked into traffic section.

d. Approach or time locking are in effect for routes into traffic block.

4. In event of power loss, traffic circuits must be capable of being reset from LCC, LCP, and/or TWC route request.

5. Configure traffic locking circuits to permit following moves in either direction.

6. Establish traffic locking before permitting moves from a home signal into locked section of track.

7. Design protection against premature release of traffic locking. Prevent release of traffic locking until a 5 second time has elapsed after a track reversal request.

8. Measure this time interval by means of a vital timer.

H. Time Locking:

1. Time locking must lock the switches within a route governed by a cleared wayside signal. The logic must be designed to prevent the clearing of wayside signals for opposing or conflicting routes when a cleared signal is set to stop for a predetermined length of time based on approach speed.

2. Released by a drop of the 5 second Loss of Shunt timer of the two track circuits indicating occupancy of the previously established route (two track release).

I. Approach Locking:

1. Design such that locking is only in effect when LRV is in approach to the signal.

2. Released by two track circuits indicating occupancy of the previously established route (two track release).

J. Route Locking:

1. Route locking must l lock switches within a route after LRV has accepted the wayside signal governing entrance to the route and prevent clearing of opposing or conflicting signals within the interlocking.

2. Route locking must remain in effect until LRV has cleared the interlocking or satisfied sectional release.

K. Detector Locking:

1. Lock switches when track over switch is occupied or if there is occupancy of an interlocking track circuit which indicates that clearance for an alternate route is not available.

2. Provide a vital timer for 5-second loss of shunt protection within the interlocking.

L. Switch Control:

1. Design normal and reverse auxiliary switch control for each switch machine.

2. If solid state controls for switch machines are proposed, equipment must l have demonstrated successful installations with identical voltage and switch machines in North America. Voltage phase configuration must also be taken into account.

3. Design switch overload circuit such that if overcurrent is detected, it will de-energize power to the machine until switch call is removed and called to the opposite position. Overload function must be individual for each switch machine.

4. Selection of switch machines and design of control circuits must assure that during a hand throw operation power is removed from the machine.

5. Lock switches by approach or time locking, route locking, and detector locking.

6. Switch Locking: Released only when approach locking, time locking, route locking and detector locking are released.

7. To limit peak power draw, design such that only two switch machines throw at once. This includes switch machines for movable point frogs.

M. Signal Clearing:

1. Provide vital signal clear logic for each signal.

2. Include the following function requirements, in addition to those requirements in Route and Aspects Charts:

a. Approach locking for the home signal is in effect.

b. Approach locking for opposing signals is unlocked.

c. Switches within route correspond with their calls and are mechanically and electrically locked.

d. No conflicting routes are being processed.

e. Appropriate interlocking track circuits are unoccupied.

f. All tracks required in the Route and Aspect Charts are unoccupied.

g. Traffic is established in the proper direction.

h. No residual time is left on approach locking timer.

i. Route locking is in effect.

j. Track or signal blocking within the route are not in effect.

3. Logic must permit LRVs in first track circuit outside interlocking to turn back into unoccupied traffic zone with full signal protection if the terminal station is beyond the interlocking the zone maybe extended beyond one track circuit into the station platform track circuit. .

4. Vent Zone Signals:

a. Normally clear in direction of traffic if vent zone is unoccupied.

b. Keep at stop if LCC or LCP has applied a signal block.

c. If a vent zone signal has been put to stop by a signal block applied by LCC or at the LCP safe braking to the signal must be maintained.

d. Provide speed commands to a vent zone signal at stop if safe braking to train ahead is available. Only applies if the vent zone is at stop because of train occupancy and not a signal block.

e. See IFC Drawings for individual signal requirements.

f. Vent Zone controlled signals can be put to stop for fire events.

N. Signal Lighting: Provide vital signal lighting circuits for each signal. Provide a vital relay as the final energy output to control the signal. Provide a back check of this relay to the signal processor as a confirmation that the signal is at stop.

O. Speed Command Enable:

1. Design ATP system to verify Safe Braking Distance (SBD) and traffic direction (except at locations designated on Contract Drawing Control Lines) prior to enabling a speed command transmission.

2. Design Function to Perform as Follows:

a. Verify conditions necessary to provide a speed command greater than zero prior to energizing speed command carrier frequency to the track.

b. Conditions to be confirmed are as shown in the control lines and include, at a minimum, track circuits unoccupied, signal clear, switch position, and traffic in either direction.

c. Energize speed command carrier frequency only when an LRV occupies track circuit designated by the control line in jointless areas.

d. At insulated joints energize carrier frequency (pre-turn-on) with occupancy of the previous track circuit.

e. Design speed command loops to sequentially begin transmitting one track circuit in advance of LRV. Sequentially de-energize speed command loops when the front of LRV occupies next track circuit.

f. Verify interlocking conditions such as route locking, switch correspondence, and switch locking in addition to SBD and traffic alignment.

g. Coordinate elements of the system design, such as pre-shunt, logic timing, and cab signal enable, to provide a smooth cab signal transition throughout the complete alignment without momentary periods of no code.

P. Speed Command Selection:

1. Base selection of a speed command on fail-safe design principles. Relay or solid-state device malfunctions or change in value must result in a more restrictive speed command.

2. Design system to produce speed commands as shown on approved control line drawings, including look-back and interlocking conditions in selection circuits.

a. Lookback: The LRV will travel at a reduced speed, as specified by the control line IFC drawings until its tail end has fully cleared the end of a speed-restricted zone.

3. Speed command selections must be limited by settings on speed command restriction panel in the signal room.

4. Non-interlocking track circuits must have a two second loss of shunt timer/ loss of shunt repeater that is to be used in the speed command selection circuits and signal clearing.

Q. Fleeting:

1. Automatically re-clears signal to the same route as previous LRV, as soon as signal clearing requirements are met.

2. Cancel of signal or route must cancel fleeting of the signal.

3. Cancel of fleeting must not automatically cancel signal.

R. Signal Blocking: Puts signal to stop until block is cancelled by LCC or LCP.

S. Switch Blocking: Prevents switch from being thrown until block is cancelled by LCC or LCP.

T. Track Blocking: Prevents entry into track block, defined between adjacent wayside signals, until block is cancelled by LCC or LCP. This condition applies equally to both ends of a track block and must be transmitted to adjacent interlocking processors.

2.02 OWNER-FURNISHED PRODUCTS / SYSTEMS

A. Link Control Center (LCC):

1. Sound Transit has a control center with displays, control consoles, computer systems, and communications (including radio communication throughout the system).

2. LCC is continuously staffed.

3. Rail SCADA system is used to display and control systems including the Signal System.

4. Light Rail Vehicle (LRV) locations and movements are tracked via LRV ID throughout the main line, including Street Running areas.

PART 3 - EXECUTION (NOT USED)

END OF SECTION

SECTION 34 42 02

SIGNALS BLOCK DESIGN

PART 1 - GENERAL

1.01 SUMMARY

A. Section includes:

1. Requirements for Signals Block design verification and train models and characteristics.

1.02 REFERENCES

A. This Section incorporates by reference the latest revisions of the following documents:

1. Sound Transit Design Technology Manual:

a. Section 12 – Record Drawings

1.03 SUBMITTALS

A. Written explanation and detailed flowcharts of block design simulation programs to be used to meet requirements of this Section.

B. Block Design Calculations:

a. Safe Braking Distance Calculations.

b. Runtime Performance Calculations.

c. Headway Calculations.

d. Approach Locking Time Calculations

e. Time Locking Time Calculations.

f. Grade Crossing Warning Times (if applicable).

C. Control Line As-Built Verification

a. Update shop drawing Control Lines and Safe Braking Distance (SBD) calculations.

b. Documentation Letter that lists all changes to the Control Lines, safe braking calculations, and all discrepancies found during the field survey.

c. Submit scanned copy of Control Line field red-lined drawings.

d. Drawings submitted must follow Design Technology Manual standards.

PART 2 - PRODUCTS

2.01 PERFORMANCE REQUIREMENTS/BLOCK DESIGN VERIFICATION

A. Control line diagrams within Contract Drawings show block layout based upon characteristics described in this Section.

B. If Contractor requires that any of these track circuit boundaries be moved for safety or operational reasons, Contractor must propose change as part of design process.

C. Verify number and placement of insulated joints as a part of block design verification report.

D. Sound Transit will review and approve any proposed change.

E. Block Design Calculations:

1. Verify block design via simulation, showing that track circuit boundaries and speed commands to be transmitted maintain safe braking distance for both Normal and Reverse Running.

2. Verify, as part of the simulation, that block layout allows Light Rail Vehicle (LRV) to meet civil restraints including, but not limited to, curves and switch speeds.

3. Include moves in both normal and reverse directions, as well as moves through both normal and reverse switches.

F. Track Speed Reductions:

1. Block design shall define speed reduction zones and approaches with block boundaries.

2. Block design shall provide more restrictive speeds as needed for the following:

a. Turnouts: Block design shall provide code change points to reduce vehicle speed on the approach to a more restrictive turnout. Block design shall enforce look-back speed reduction to prevent speed command upgrades until the rear axle of the vehicle is clear of the turnout.

b. Look-back circuits: Block design shall enforce look-back speed reduction for crossover moves, station platform areas and speed restricted curves to prevent speed command upgrades until the rear axle of the vehicle is clear of the track block governing the area.

c. Crossings: Block design shall provide restrictions in the vehicle speed commands on both tracks within the approaches to a grade crossing which has been deactivated by the manual override raise pushbutton. The cab speed for the track, with the “occupied approach” enabled raise pushbutton function, shall have reduced cab speed commands on track circuits within the approach, graduated to deliver a zero (0) mph speed command in the track circuit(s) at the crossing. The adjacent track’s cab speed shall have reduced cab speed commands on track circuits within the approach to the grade crossing, graduated to deliver a ten (10) mph MAS in the track circuit(s) at the crossing where the gate override function has been enabled.

G. Braking Calculations to Curves:

1. Normal LRV Model must be used in the braking calculations to curves.

2. Braking calculations must be to the spiral to curve point of the curve.

3. Safe braking distances (SBD) to the spiral to curve point must not result in more than 4.5 inches of unbalanced superelevation.

4. If the normal braking model results in more than 4.5 inches of unbalance the safe braking distance to the curve must be used.

5. Normal LRV model must not be used on turnout braking calculations.

H. Safe Braking Verification Calculations:

1. Provide a report documenting that safe braking distances (SBD) from each block boundary for each maximum allowable speed (MAS) speed limit and lower speed limits are met.

2. Provide control line drawings similar to those in the Contract Drawings.

3. Provide the highest possible Automatic Train Protection (ATP) speed for both directions in each block while meeting headway requirements.

4. Provide calculations performed by Contractor that provide SBD for each ATP speed limit command (at or below MAS even if not given) at each block boundary.

5. Show that block design provides the best normal and reverse intermediate speed limits that SBD and vent zone requirements permit for each block.

6. SBD calculations must consider track and civil design characteristics, as well as LRV performance characteristics.

7. Identify in the report any stopping distance overruns or speed restriction violations using criteria specified herein.

8. Contractor and Sound Transit will work together to resolve any issues so that, ultimately, both parties agree that there are no violations and the design matches Sound Transit operating requirements.

I. Runtime Performance Calculations:

1. Calculate runtime performance trains operating in both normal and reverse direction of traffic, using the Normal LRV Model.

2. Calculate, and include in report, runtimes for normal and reverse direction with four car trains.

3. Trains must proceed in response to ATP speed limit signals and specified station dwell times.

4. Assume that necessary signals will be cleared prior to any speed command effect.

5. Provide printouts of speed and runtime significant intermediate points between stations, such as block boundaries, points of switch, vent zone limits, and speed restriction boundaries.

J. Headway Calculations:

1. Provide computerized simulation runs used to evaluate block design concurrently with block design.

2. Show that block boundaries in Contractor’s design support headways required.

3. Include effects of vent zone restrictions in these calculations such that only one train is allowed in the vent zone and the train approaching an occupied vent zone has reduced speed commands to assure stopping at the entrance signal.

4. Calculate headway using two nominal trains operating with the same speed profile used for calculating runtime.

5. Identify headway at each block boundary and specifically identify the most restrictive headway location between each station.

6. Verify that normal direction headways on both tracks, using LRV models described in this Section.

7. If Contractor's analysis finds that these block boundaries do not provide for required headways, suggest changes that will make the required improvements.

8. Although there are no specific goals for reverse traffic headway, calculate and report headway for both normal and reverse direction operations.

K. Approach Locking Time Calculations:

1. Calculate approach locking time used to hold the approach stick relay (ASR) for each home signal at each interlocking.

L. Time Locking Time Calculations:

1. Examine the most distant control line that is affected by each home signal.

2. Assuming that LRV is approaching the signal at MAS, calculate amount of time LRV will take from when it first enters that control line (depicted as dashed line in Contract Drawings) until front of LRV reaches signal.

M. Control Line As-Built Verification

1. Utilize Civil track As-builts to verify the length of each track circuit and locations of all insulated joints.

2. Contractor's Application Engineer must verify the accuracy the Control Lines and Safe Braking Distance (SBD) calculations submittal based on the As-built track drawing.

3. Contractor's Application Engineer must submit updated set of the shop drawing Control Lines and Safe Braking Distance calculations for Sound Transit to review.

4. The contractor's Application Engineer must also submit a letter to Sound Transit alongside the new shop drawing Control Line and Safe Brake Distance Calculations with a list of the change or noting "no changes" if there are none.

5. The Control Line As-Built Verification submittal must be approved Code 1 or Code 2 by Sound Transit prior to the start of 400 Series SIT testing. Any control lines modified by the Application Engineer during this process must be verified during SIT #403.

2.02 NORMAL LRV MODEL

A. Vehicle Braking Characteristics:

1. Calculate nominal model braking distances using the formula:

$BD = (V_{es} * RT_{nom} * 1.467) + ((V_{es}^2 - V_f^2) * (0.7333/(0.22G + BR_{nom})))$ Where:

a. BD: Braking distance required, in approach to spiral-to-curve point, of a curve (in feet).

b. V_{es}: Speed of LRV as it enters the block and is assumed to be cab speed. (in miles per hour)

c. RT_{nom}: Sum of nominal reaction times from time LRV passes a cab signal change point until brakes are applied and is assumed to be 3.5 seconds. During this time, assume LRV travels at previous cab speed with no acceleration or deceleration taking place.

d. V_f: Civil speed limit of curve LRV is approaching. (in miles per hour)

e. 1.467 and 0.7333 are calculated numbers that include conversion from miles/hour to feet/second.

f. G: Grade (rise/run in percent) over which braking will occur. (positive for uphill, negative for downhill)

g. 0.22 is correction factor used to adjust braking distance for effects of grade.

h. BR_{nom}: De-rated brake rate, assumed to be 2.1 mphps.

2. Vehicle Characteristics (For Headway Calculations):

a. Maximum Level Acceleration: 3 mphps.

b. Maximum Brake Rate: 3 mphps.

c. Service Brake Rate: 3 mphps.

d. Station Brake Rate: 2.2 mphps.

e. Brake Delay: 2.5 mphps.

f. Vehicle Length: 95 feet.

g. Nominal Vehicle Weight: 139,000 lb.

h. Axles: 6.

i. Inertia (ratio): 0.055.

j. Jerk Limit: 2.5 mphps.

k. Performance Levels:

1) 10 MPH Cab Code: 10 mph.

2) 20 MPH Cab Code: 20 mph.

3) 25 MPH Street Running Code: 25 mph.

4) 30 MPH Cab Code: 30 mph.

5) 35 MPH Cab and Street Running Codes: 35 mph.

6) 40 MPH Cab Code: 40 mph.

7) 45 MPH Cab Code: 45 mph.

8) 55 MPH Cab Code: 55 mph.

l. Davis Equations:

1) C1: 1.3 lbs/ton.

2) C2: 116 lbs/axle.

3) C3: 0.045 lbs/ton/mph.

4) C4: 0.0024.

5) Aero Drag Coefficient: 0.00034.

6) Frontal Area: 105 ft^2.

m. Station Dwell: 20 seconds.

2.03 SAFETY LRV MODEL

A. Calculate Safety Model Braking Distances Using the Formula:

$$SBD = (V_{os} * RT_{max} * 1.467) + ((V_{os}^2 - V_f^2) * (0.7333/(0.22G + BR_{eff}))) * 1.35 + (2 * 7')$$

Where:

1. SBD is safe braking distance in feet.

2. V_{os}: Speed of LRV (in mph) as it enters the block, assumed to be cab command speed plus 4 mph overspeed.

3. RT_{max}: Sum of worst-case reaction times from time LRV passes a cab signal command change point until brakes are applied. This time consists of:

a. 2.0 second to lose existing and decode new cab command.

b. 0.5 second to detect lower speed.

c. 0.35 second of propulsion build down time.

d. 0.3 second of LRV propulsion system change time.

e. 0.65 second of brake build-up time.

f. RT_{max} is therefore a total of 3.8 seconds. During this time, it must be assumed that no acceleration or deceleration takes place and LRV proceeds into new block at previous V_{os}.

4. 1.467 and 0.7333 calculated numbers that include conversion from miles/hour to feet/second.

5. V_f: Final speed of LRV in miles per hour, when calculating SBD, this number will always be zero.

6. G: Grade (rise/run in percent) over which braking will occur. (positive for uphill, negative for downhill)

7. 0.22 is correction factor used to adjust braking distance for effects of grade.

8. BReff: De-rated brake rate, 1.95 mphps.

9. 1.35 is the addition of a 35 percent safety factor. Apply only to braking portion of SBD calculation.

10. Two multiplied by 7 feet accounts for overhang of vehicles and is assumed to be 7 feet at the end of each vehicle.

2.04 COMMON CHARACTERISTICS

A. Parameters are Common to Both Braking Models.

B. There are Ten Speed Code Commands:

1. 55 mph.

2. 45 mph.

3. 40 mph.

4. 35 mph.

5. 30 mph.

6. 20 mph.

7. 10 mph.

8. 0 mph – no code

9. Street Running – 25mph.

10. Street Running – 35mph.

C. Perform Calculations on Four LRV Consists:

1. One car train, weight = 110,000 pounds.

2. One car train, weight = 158,500 pounds.

3. Four car train, weight of each car = 110,000 pounds.

4. Four car train, weight of each car = 158,500 pounds.

D. Car Length: 95 feet long.

E. Car Overhang: 7 feet at each end.

F. Track circuit length: 72 feet minimum due to LRV trucks spacing.

G. Stations Dwell Time: 20 seconds.

H. Design Headway: 120 seconds (90 seconds in merged areas).

I. Acceleration: In accordance with Figure 1, below.

J. Jerk Limit: 2.5 mph/sec^2.

FIGURE 1 ACCELERATION RATE

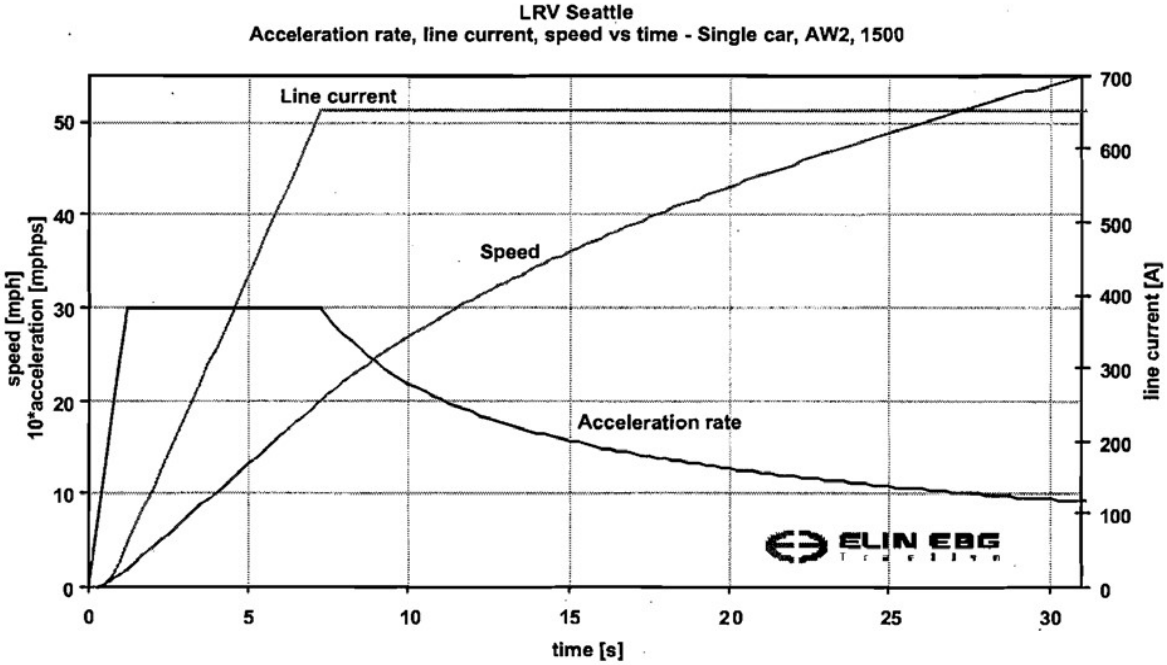

➢ Single AW2 car - acceleration rate, line current and speed vs. time @1500V

2.05 SPEED LIMITS

A. MAS: Highest ATP speed limit that can be transmitted in a block for purpose of enforcing civil speed limits.

B. Ensure that nominal LRV is down to stated civil speed limit before head end of LRV reaches spiral to circular portion of curve.

C. Arrange circuits such that look backs (tail end clearing) are provided whenever LRV is leaving a curve or crossover/turnout move. Design such that entire LRV is clear of curve or switch before cab signal is upgraded to a speed greater than that allowed by civil restriction.

D. In addition to safety, the block design must provide the best runtime possible within the restraints specified herein. The exception to this is that it is not necessary to give a higher speed command if that command can only be given for 5 seconds or less before returning to a lower command.

2.06 ADDITIONAL REQUIREMENTS

A. Crossbonds:

1. Provide crossbonds at a maximum distance of 2500 feet apart.

2. Spacing between cross bonds shall not be spaced less than 2 times the length of the longest AF track circuit within the block.

3. Installation of cross bond shall not interfere with proper operation of track circuits.

PART 3 - EXECUTION (NOT USED)

END OF SECTION

SECTION 34 42 03

INTERLOCKING REQUIREMENTS

PART 1 - GENERAL

1.01 SUMMARY

A. Section includes:

1. Requirements for interlocking operation.

1.02 REFERENCES

A. Definitions

1. Normal Conditions – All track circuits unoccupied, all switches and traffic alignment normal, no blocks applied, and signals at stop except vent signals.

1.03 SUBMITTALS

A. Submit application programming including vital and non-vital programming in accordance with Section 34 42 59 - Signal Vital Processor. All identifying nomenclature and abbreviations is to be consistent with that of existing Sound Transit nomenclature and abbreviations. Listing of existing nomenclature and abbreviations will be provided upon request from Contractor.

B. Book of Plans:

1. Provide a plan book for each signal room.

1. Submit Book of Plans at the following levels for each signal room location:

a. As-designed.

b. As-shipped.

c. As-built.

2. Bind drawings for each signal room together as a book of plans.

3. Provide drawing types in the order listed below:

a. Cover Sheet: Drawing showing name of location and other pertinent contractual items.

b. Index Sheet: Index listing each drawing and sheet number in the plan book. For small locations, this may be combined with the cover sheet. Separate Alphanumeric Index sheets if more than 100 drawings in the plan book.

c. Symbol Drawings: Provide, in each set of plans, symbol sheets showing symbols and nomenclature with explanations as applied to this Contract. Utilize circuit symbols consistent with Sound Transit existing Pine St signal drawings.

d. Track Plans: Provide double line horizontal drawings showing track configuration including stationing and designations of items such as Train to Wayside Communication (TWC) loops, signal equipment rooms, signal houses, cases, switch machines, signals, track circuits, track circuit frequencies and bonding, station platforms, and insulated joints that are pertinent to the area for that signal location. Plans should extend up to the hand-off track circuits between the current and adjacent house control limits.

e. Interlocking Layout and Installation Drawings: Submit an installation layout of track circuit equipment for each interlocking. Show impedance bonds, insulated joints, negative return connections, traction power bonding schematic, location of single-rail track circuits, loops (including transpositions), junction boxes, and cable routing as part of each layout.

f. Control Line Plans: Drawings showing control lines for track circuits controlled from the signal room.

g. Cable Plans: Drawings which indicate point-to-point cable runs and identify cable make-ups and conductor wire size. Include cables, wire, and equipment to which cables run that are pertinent to the area for that signal location. Include drawings that document the location to location fiber optical cable utilized by the signal system.

h. Circuit Drawings:

1) Show various types of control, operating, and indication circuits required.

2) List title and unit number of particular function(s) performed by circuits illustrated.

3) Show complete circuit when it leaves the room, including termination points and locations.

4) Draw circuits to show actual wiring of circuit, not as schematics.

5) Use a uniform method such as angled lines to indicate actual locations of double wired terminations if it is not desirable to show both wires terminating on the same point.

i. Energy Distribution Drawings: Show both ac and dc energy distribution systems or subsystems including wire sizes. Show grounding on a separate drawing, or on energy distribution drawing.

j. Arrangement Plans: Show arrangement of equipment, facilities, or components in a room, rack, or module. Detail arrangement of drawings to show contact and terminal.

k. Route and Aspect Chart

l. SCADA interface chart.

C. Cable Installation Plans:

1. Conduit Riser Plans: Plans showing diagram of conduits used by signal cables listed in cable plans.

2. Cable Installation Plans: Plans as specified in Common Work Results for Systems Conductors and Cable to include but not limited to, wayside duct bank, bungalow to wayside devices, and duct bank and pull box details.

3. Cable pull drawings identifying which cables are in which conduit, the fill, and each MH or pull box on path.

D. Equivalent Circuits:

1. Translate application logic, both vital and non-vital, into standard Signal System drop line symbols for relays, and contacts. Show contacts in Normal Condition.

2. Include any timing characteristics associated with software relays.

3. For each location, including all existing locations modified, update the logic equation books including variable nomenclature description, equations, equation variable index, identification where each variable is used, timer settings (min, max, default, current value), serial interfaces to other locations.

4. Show complete circuit on a single sheet to the maximum extent possible. Circuits that are incomplete on one sheet must provide a reference to sheet circuit is continued on.

5. Must provide PDF of equivalent circuits for as-designed, as-shipped, and as-built levels.

6. Must provide two hard-copies of equivalent circuits printed on 8.5 inch by 11 inch paper in binder at the as-built level.

E. Factory and Field Test Procedures and Reports.

PART 2 - PRODUCTS

2.01 INTERLOCKING MODES

A. Interlocking Modes: Mutually exclusive so that each interlocking is in one, and only one, mode at any one time. Only initiate requests, except dispatch command, from location of mode in control.

B. See the Contract Drawings for control and indication functions relating to these modes.

C. Automatic Mode:

1. In automatic mode the interlocking is controlled through use of Train to Wayside Communications (TWC) system and/or track occupancy.

2. Each interlocking with approach clear routing must normally operate in Automatic Mode.

3. Interlockings without approach clear routing will normally operate in fleeting mode.

4. It must not be possible to request a signal, through use of TWC, unless there is a train in the track circuit corresponding to TWC loop.

5. Lowest priority mode.

6. Routes cannot be requested via LCC or LCP while interlocking is in auto mode.

D. Central Mode:

1. In central mode the interlocking is controlled from Link Control Center (LCC) via Train Control System (TCS).

2. Second highest priority mode. Control can be assumed if in Auto mode, but must require release by Local Control Panel (LCP) if in Local mode.

3. Routes cannot be requested via TWC or LCP while interlocking is in central mode.

E. Local Mode:

1. In local mode the interlocking is controlled via the LCP in the signal equipment room for the corresponding interlocking.

2. Highest Priority Mode. Local Panel Control can be assumed if in Auto mode, but must be requested from and acknowledged by LCC if in Central Control mode.

3. Emergency Local Control command must bypass request to LCC for acknowledgement and place LCP in Local mode immediately.

4. Routes cannot be requested by TWC or LCC while interlocking is in local mode.

2.02 ROUTE REQUESTS

A. Normal signal aspects to be displayed at each interlocking signal are shown on Contract Drawings.

B. Routes through interlockings must be capable of being requested in the three different operational modes, with the exception that reverse routes cannot be requested by the use of TWC.

C. A change from one mode to another must not affect status of any previously requested route.

D. A signal that was requested in one mode must remain requested and capable of being cancelled in any mode in control.

E. TCS Interface:

1. Provide signal processors with a serial data interface to TCS equipment as shown on Contract Drawings JCS701. TCS must only interface with the signal processor (normal or standby) which is in control.

2. Details of data interface are included in Contract Drawings and as specified in Specification Section 34 42 65 - Central Control Interface.

F. Route Initiation:

1. Base route request logic from TCS and LCP on an entrance – exit format, unless otherwise noted in Contract Drawings.

2. Selection of an entrance must cause signal processor logic to check conditions to determine which routes (exits) are feasible at that time.

3. Transmit allowable exits to TCS and display on LCP.

4. Through routing must be included at all pocket track interlockings and other designated interlockings.

5. Selection of exit must cause non-vital logic to complete request and transfer traffic circuit request, switch call, and signal clearing requests into vital logic.

6. Route must not be available until track circuit beyond exit signal is unoccupied.

7. Automatic:

   a. Automatic and TWC route requests must verify that conditions to complete route are compatible before initiating action to vital logic.

   b. Automatic route requests must initiate in advance approach track (i.e. track circuit before approach locking block boundary) identified on Route and Aspect Charts.

   c. In the event automatic route is not available at that time, allow Light Rail Vehicle (LRV) to continue to close on signal and initiate route when available.

   d. Some automatic requests are approach cleared with only one automatic exit available.

   e. Normal direction traffic only. Not available for reverse running traffic.

8. Fleeting:

   a. All signals must be capable of being fleeted.

   b. Fleeting must automatically re-clear signal to same route as previous train as soon as conditions identified in the Route and Aspect Chart permit.

   c. Some approach cleared signals, identified in the Route and Aspect Chart, will not retain the fleeting call in Auto Mode. If there is not a train within the advanced approach zone the signal will auto cancel.

9. Interlocking must be equipped with signal block function for all signals that prevents route initiation from that signal regardless of source (LCC, LCP, auto, or TWC) until block is removed.

10. Interlocking must be equipped with track block function that prevents route initiation, regardless of source, into that track block between interlockings. Track block applied at one interlocking, must also be applied to the same block at the applicable adjacent interlocking.

2.03 INTERLOCKING OPERATION

A. The following is a description of control methods and specific operational requirements for each interlocking. These requirements are a supplement to the general requirements identified above and those described in the Contract Drawings.

   1. Must provide detector, approach, indication, and route locking at each interlocking.

   2. Must provide traffic locking between interlockings. The traffic circuit must use magnetic stick relays to maintain the traffic direction in the event of loss of power to the signal processor. The magnetic stick relays used for this application can be either vital or non-vital, as long as the final circuitry is vital.

   3. Detector locking at interlockings must not be released until 5 seconds after track relays have closed their front contacts.

   4. Permit simultaneous non-interfering movements.

5. Must provide sectional release of interlocking switches and signals to speed operations, to the maximum extent possible while preserving safety.

6. Must provide signal overrun detection for each signal.

    a. The logic must not alarm overruns for parallel or non-conflicting routes or interlocking track circuit occupancies that occur without a train on the first approach track circuit before the signal.

    b. Overrun detection must put any interlocking speed commands, except parallel non-conflicting routes, to zero.

7. Provide enough location power to allow all switch machines necessary for any route to throw simultaneously.

B. Terminals:

1. Design interlocking to operate in accordance with requirements of the Route and Aspect Charts in the Contract Drawings.

2. Route Initiation: Via TCS controls and dispatch commands, LCP, approach clearing terminal modes, or TWC requests.

3. Provide approach cleared automatic routing for northbound normal direction approach to terminal station interlocking based on terminal mode. Automatic routing is not permitted into occupied platform track circuits.

4. Design TWC system capable of requesting dispatch movement from either track and to cancel and call routes at signals.

5. TCS must be capable of initiating LRV dispatch function.

6. LCP Interface: Capable of selecting terminal mode and controlling dispatch movements from the platform.

7. TCS Interface: Controls identical to those available from the LCP, LCC requests can be generated either automatically, based on a schedule, or manually.

8. Terminal Modes:

    a. Mode 1 – Automatic route selection to either track, diverging route being preferred route.

    b. Mode 2 – Automatic route selection to diverging track into terminal station.

    c. Mode 3 – Automatic route selection to normal track into terminal station.

    d. Manual – No automatic routing. Route requests will need to come from either Train Operator via TWC or from LCC via TCS.

PART 3 - EXECUTION (NOT USED)

END OF SECTION

SECTION 34 42 04

YARD – INTERLOCKING REQUIREMENTS

PART 1 - GENERAL

1.01 SUMMARY

A. Section includes:

1. Requirements for the following:

a. Yard interlocking operation.

b. Design and installation of Yard applications of the following:

1) Track Circuits

2) Train-to-Wayside Communications

3) Numerical Signs

4) Local Control Panel

1.02 REFERENCES

A. This Section incorporates by reference the latest revisions of the following documents:

1. American Railway Engineering and Maintenance-of-Way Association (AREMA).

2. C&S Part 8 – Communications and Signal Manual, Track Circuits.

3. C&S Part 11 – Communications and Signal Manual, Circuit Protection.

4. C&S Pat 14.2 – Communications and Signal Manual, Electrical Devices.

B. Definitions:

1. LCP: Local Control Panel.

2. SVP: Signal Vital Processor.

3. SMC: Signal Maintenance Computer.

1.03 SUBMITTALS

A. Submit application programming including vital and non-vital programming in accordance with Section 34 42 59 - Signal Vital Processor. All identifying nomenclature and abbreviations is to be consistent with that of existing Sound Transit nomenclature and abbreviations. Listing of existing nomenclature and abbreviations will be provided upon request from Contractor.

B. Book of Plans:

1. Provide a Plan Book for each signal room.

2. Submit Book of Plans at the following levels for each signal room location:

a. As-designed.

b. As-shipped.

c. As-built.

3. Bind drawings for each signal room together as a book of plans.

4. Provide drawing types in the order listed below:

a. Cover Sheet: Drawing showing name of location and other pertinent contractual items.

b. Index Sheet: Index listing each drawing and sheet number in the plan book. For small locations, this may be combined with the cover sheet. Separate Alphanumeric Index sheets if more than 100 drawings in the plan book.

c. Symbol Drawings: Provide, in each set of plans, symbol sheets showing symbols and nomenclature with explanations as applied to this Contract. Utilize circuit symbols consistent with Sound Transit existing Pine St signal drawings.

d. Track Plans: Provide double line horizontal drawings showing track configuration including stationing and designations of items such as Train to Wayside Communication (TWC) loops, signal equipment rooms, signal houses, cases, switch machines, signals, track circuits, track circuit frequencies and bonding, station platforms, and insulated joints that are pertinent to the area for that signal location. Plans should extend up to the hand-off track circuits between the current and adjacent house control limits.

e. Interlocking Layout and Installation Drawings: Submit an installation layout of track circuit equipment for each interlocking. Show impedance bonds, insulated joints, negative return connections, traction power bonding schematic, location of single-rail track circuits, loops (including transpositions), junction boxes, and cable routing as part of each layout.

f. Cable Plans: Drawings which indicate point-to-point cable runs and identify cable make-ups and conductor wire size. Include cables, wire, and equipment to which cables run that are pertinent to the area for that signal location. Include drawings that document the location to location fiber optical cable utilized by the signal system.

g. Circuit Drawings:

1) Show various types of control, operating, and indication circuits required.

2) List title and unit number of particular function(s) performed by circuits illustrated.

3) Show complete circuit when it leaves the room, including termination points and locations.

4) Draw circuits to show actual wiring of circuit, not as schematics.

5) Use a uniform method such as angled lines to indicate actual locations of double wired terminations if it is not desirable to show both wires terminating on the same point.

h. Energy Distribution Drawings: Show both ac and dc energy distribution systems or subsystems including wire sizes. Show grounding on a separate drawing, or on energy distribution drawing.

i. Arrangement Plans: Show arrangement of equipment, facilities, or components in a room, rack, or module. Detail arrangement of drawings to show contact and terminal.

j. Route and Aspect Chart.

k. SCADA interface chart.

C. Cable Installation Plans

1. Conduit Riser Plans: Plans showing diagram of conduits used by signal cables listed in cable plans.

2. Cable Installation Plans: Plans as specified in Common Work Results for Systems Conductors and Cable to include but not limited to, wayside duct bank, bungalow to wayside devices, and duct bank and pull box details.

3. Cable pull drawings identifying which cables are in which conduit, the fill, and each MH or pull box on path.

D. Equivalent Circuits:

1. Translate application logic, both vital and non-vital, into standard Signal System drop line symbols for relays, and contacts. Show contacts in Normal Condition.

2. Include any timing characteristics associated with software relays.

3. For each location, including all existing locations modified, update the logic equation books including variable nomenclature description, equations, equation variable index, identification where each variable is used, timer settings (min, max, default, current value), serial interfaces to other locations.

4. Show complete circuit on a single sheet to the maximum extent possible. Circuits that are incomplete on one sheet must provide a reference to sheet circuit is continued on.

5. Must provide PDF of equivalent circuits for as-designed, as-shipped, and as-built levels.

6. Must provide two hard-copies of equivalent circuits printed on 8.5 inch by 11 inch paper in binder at the as-built level.

E. Track Circuits:

1. Product Data: Description and catalog of proposed track circuits to be furnished including:

2. Proven equipment history.

3. Circuit drawing and description identifying that performance requirements have been met.

4. Parts list.

5. Component drawings and data.

6. Track Circuit Calculations.

7. Track Circuit Installation Drawings: Identify materials and methods to be used for installation. Submit at least 180 Days prior to installation. Submit product data, such as catalog cuts and installation procedures, as required to fully describe each element of installation.

F. Numerical Signs:

1. Shop Drawings:

a. Must provide complete drawings including mounting and wiring details, PC board details, LED details, microcontroller details, surge protection details and bill of materials.

2. Product Data:

a. Description and/or catalog cut of proposed equipment to be furnished.

b. Key-numbered parts list and complete material ordering reference numbers.

3. Samples:

4. Source Quality Control:

a. Factory Inspection Procedure.

b. Factory Inspection Report.

5. Must provide all software and hardware necessary to reprogram and rebuild numerical sign in the case of a total replacement.

G. Train-To-Wayside Communication (TWC):

1. Product Data:

a. Description and/or catalog cut, including proven equipment history of the following:

1) TWC interrogators.

2) Interrogator lead cable.

3) Loop converter.

2. Shop Drawings:

a. Each TWC Interrogator, showing functions performed by interrogator and model numbers and location of every electronic rack, electronic circuit card, and power supply.

b. Detailed, scaled mechanical layout drawings suitable for manufacturing including parts and material list for loop antennas.

c. Show as-installed and tested configuration of each TWC Interrogator including TWC output masking.

3. TWC Loops: Detailed, scaled mechanical layout drawings suitable for manufacturing including parts and material list for loop antennas. TWC installation adjustment procedures.

4. Interrogator Masking:

a. Site specific masking for each location at the:

1) As-shipped level.

2) As-built level.

b. All software required to adjust the interrogator masking.

5. Operation and Maintenance Manuals:

1) Show functions performed by interrogator.

2) Show model numbers and location of every electronic rack, electronic circuit card, and power supply.

3) Show as-installed location and size of each TWC loop.

4) Provide a description of TWC system and a description of each printed circuit card and electronic module complete with part numbers, theory of operation, and test requirements.

H. Local Control Panel:

1. Submit color PDF layout of each yard local control panel. For any feature or function not readily apparent from the PDF, provide a written attachment describing the feature and what color changes occur in the operating scenario. Incorporate Sound Transit's comments and submit with final design.

2. Product data for Signal Maintenance Computer, portable Maintenance Computer and testing equipment.

3. Catalog cut of proposed hardware and software to be used for Signal Maintenance Computer and portable Maintenance Computer. Submit manuals for applications stored on each computer. Provide any software licenses required for operation.

PART 2 - PRODUCTS

2.01 PERFORMANCE REQUIREMENTS - INTERLOCKING MODES:

A. Interlocking Modes: Mutually exclusive so that each hemisphere interlocking is in either AUTO which means TWC route request, or Local Control Panel mode at any one time. Only initiate requests from mode in control.

1. Automatic Mode:

a. Control: Route request only through use of the TWC system.

2. Local Mode:

a. Control: Via LCP in each hemisphere equipment room for corresponding interlocking(s).

b. Highest priority mode. Local panel control can be assumed at the panel if in Auto mode. It only reutrns to Auto Mode by selection at the Local Control Panel. Selection of Local Auto puts the entire hemisphere into that mode.

c. Canceling Requests:

1) Requests must be able to be canceled via the TWC and LCP.

2) Must provide a 25 second timer, adjustable from 10 to 60 seconds, that cancels requests after the timer runs.

3. A change from one mode to another must not affect status of any previously aligned route.

4. Route Initiation:

a. Although AUTO mode route initiation is based on CALL with selected destination, base route request logic from LCP on an entrance – exit format.

b. Selection of exit must cause non-vital logic to complete request and transfer traffic circuit request, switch call, and signal clearing requests into vital logic.

B. Interlocking Operation:

1. The following is a description of control methods and specific operational requirements for each interlocking. These requirements are a supplement to the general requirements described in the Contract Drawings or other specification sections.

2. The Control of the yard is divided into two independent hemispheres where TWC or local control panels may call routes independent of each other except where traffic circuit alignment prohibits calling into a yard runaround track from opposite directions.

3. Route requests that can not be completed must not be stored.

4. Provide detector, indication, and route locking at each interlocking. Provide route locking logic for each track circuit. For track circuits that have a destination number like turnback tracks 00, utilize route locking to prevent opposing routes within the same hemisphere.

5. Provide time locking of 10 seconds adjustable from 5 seconds to 30 seconds. Time locking must hold the route locking and switch locks for the length of the timer after a signal goes to stop for any reason other than a train passing a clear signal.

6. Provide traffic locking between interlockings to the other hemisphere. Do not provide traffic circuit for storage tracks or shop tracks. It must be possible to simultaneously clear opposing routes into the opposite end of these destination tracks.

7. Provide traffic circuit interface between the yard signal bungalows and the mainline bungalow to prevent simultaneous opposing routes from yard and mainline to the same yard track. Provide mainline signal bungalow with indications of yard track circuit, route lock, and switch status in the yard lead area thru the first yard interlocking. Since the signal processors for yard and mainline may not be compatible, if necessary the interface must be over copper conductors with relays at no additional cost to Sound Transit. If mainline contractor and yard Contractor

can coordinate fiber signal processor to signal processor communication, then this is the preferred method.

8. Detector locking at interlockings must not be released until 5 seconds after track relays have closed their front contacts.

9. Permit simultaneous non-interfering movements.

10. Provide sectional release of interlocking switches and signals to speed operations, to the maximum extent possible while preserving safety.

11. Switch throw control must include a vital timer that if the points are not able to attain their called position within the programmed time, then they must time out and remove power. It will be necessary to recall the switch back to its original position before attempting the initial call again. The vital timer must be adjustable from 3 to 5 seconds.

C. Track Circuits:

1. Failsafe Design Requirement: Use fail-safe design principles in design of track circuit components. Failure of component or maladjustment of track circuit shall not cause an unsafe condition.

2. A shunt of 0.2 ohm between rails of a track circuit shall cause that track circuit to indicate LRV occupancy.

3. Design track circuits compatible with traction power negative return. Track circuit operation shall not be affected by traction power return current ibalances.

4. Restoration of power after a power failure must automatically restore track circuits to normal operation.

5. Reset of de-energized track circuits shall not be based on adjacent track circuit occupancy.

6. No center-fed track circuits allowed.

7. Although PSO track circuits are preferred, if power frequncy track circuits are used they must be designed such that no components are shared except for primary of transformer. When crossing an IJ to the adjacent track circuit the polarity of the 100 Hz energy shall be the opposite phase.

8. Design system with capability to allow shunting sensitivity adjustment in conjunction.

9. Functional Temperature Range: Minus 40 degrees F to plus 160 degrees F.

10. Track Circuit Configuration:

    a. Single-rail in special trackwork and yard. Track circuits are not required in storage track or shop tracks.

11. Standard: AREMA Communications and Signals Manual, Parts 8.1.1, 8.1.20, 8.1.33, 8.1.34, and 8.4.1.

12. Design single-rail track circuit connections (track feeds and track relays) with fuses:

    a. Fuse on Relay End: 10A.

b. Fuse on Transformer End: 20A for PF and 10A for AF.

13. Lightning Protection: In accordance with AREMA Communications and Signals Manual, Part 11.3.1.

14. Adjustable Resistors: In accordance with AREMA Communications and Signals Manual, Part 14.2.15.

15. Transformers for Power Frequency Track Circuits:

    a. Transformer Power Frequency: 100 Hz.

    b. Standard: In accordance with AREMA Communications and Signal Manual, Part 4.2.10.

    c. Primary Winding: 120 V with a 13 percent tap to compensate for reduced voltage.

    d. Design number and voltage of secondary windings compatible with application needs.

    e. Design voltage taps that provide for suitable track circuit adjustment.

    f. Mounting: Suitable for rack mounting.

    g. Include balancing impedance or blocking transformer for each single-rail track circuit, to minimize effects of dc propulsion current on track circuit.

16. Relays for Power Frequency Track Circuits:

    a. Type: Vital two-element, phase-selective, plug-in, vane relays suitable for operation on 100 Hz track cicuits.

    b. Local Element Voltage: 120 V nominal.

17. Solid State Track Circuits:

    a. An alternative to use PSO or AFTAC in a single rail configuration with IJ boundary is allowable. When transferring to the next track circuit across an IJ the adjacent rack circuit shall be a different frequency.

18. Track Circuit Calculations:

    a. Calculate settings for each track circuit, including feed voltages, transformer tap settings, and resistor settings.

    b. Prepare forms with these calculations and for recording these adjustments in the field.

    c. Assume a power line voltage regulation of plus or minus 10 percent.

19. EMI Mitigation:

    a. Track circuits will be exposed to several sources of electromagnetic interference including, but not limited to, LRVs themselves which will use ac propulsion equipment.

    b. Design system, as installed, to function pproperly in this environment.

c. Design protection to prevent unsafe conditions and damage to equipment under fault and surge conditions.

D. Numerical Signs:

1. Numerical Signs use two alpha/numeric characters 12 inches tall and amber in color.

2. Designed so that failure of individual LEDs or arrays of LEDs must not cause an alpha character to be displayed such that it could be interpreted as one of the other three characters.

3. Sign Position:

a. Signs are to be observable from all TWC loops capable of making requests for that sign. Multiple tracks may observe the same sign such as those exiting storage tracks or shop tracks.

b. Signs must be mounted at height of 7 feet above top of rails and must be viewable from position of operator in the cab of the LRV stopped at any corresponding TWC loop for that sign.

4. For signs with more than one TWC loop source capable of requesting a route the LRV operators are responsible for coordinating the timing of their requests.

5. Each Yard numerical sign must have the following states:

a. Horizontal Amber Bar – This is the normal condition and means stop.

b. Flashing Horizontal Amber Bar – This means stop and that signal logic for that “interlocking” will not process or remember any additional TWC destination requests. This would be displayed at all numerical signs of that interlocking except the one (or more) facing the TWC loop that has input a valid reqest. All numerical signs of that interlocking shall also display a flashing amber bar whenever the lockout condition is due to the interlocking track circuit(s) being occupied. The exception to this is that a numerical sign facing TWC loops that have a possible non-conflicting route shall display the non-flashing horizontal bar. If one of these loops attempts to call a conflicting route, then the flashing horizontal bar shall begin only if the destination request is conflicting.

c. Route Numerical Symbol – This is displayed on the numerical sign facing the requesting TWC loop when a valid TWC request is being processed. The number shall continue to flash until the route is cleared or until the route request cancels via maximum time allocated or route to clear expires. When the switches are aligned to the correct position and route is cleared the number changes from flashing to solid number which is only displayed on the numerical sign(s) facing the requesting TWC loop.

d. Flashing “NA” - If a TWC loop attempts to call a destination not available from that loop, then the facing numerical sign shall display a “NA” for 3 seconds.

E. TWC:

1. Design Requirements:

a. Design system such that current in each wayside TWC loop generates a Radio Frequency Signal detected by car-carried TWC transponder located at each end of each LRV.

b. Upon receipt of wayside TWC interrogation signal, car-carried transponder shall transmit a 19-bit data message back to wayside loop.

c. Design wayside TWC equipment to function with carborne TWC equipment currently in use on Sound Transit system.

2. Interfacing Existing Carborne Equipment:

a. Manufacturer/Product: TWC System: Phillips VETAG compatible by Hanning & Kahl, Irwin Industries, or approved equal.

b. LRVs are equipped with TWC transponders at both ends on center line of carbody, approximately 5 feet from end of coupler.

c. TWC system uses a wayside interrogator to excite a wayside loop antenna with approximately 0.1 A, at frequencies between 90kHz and 100kHz.

d. Transmission from car-carried transponder is between 90kHz and 100 kHz.

e. The wayside TWC system must offer reliable capture of LRV car ID data that is consistent with ST existing equipment. This must be validated by SIT SCADA tests utilizing 4-car consists.

3. Interrogators:

a. Check received data messages for presence of proper start and stop codes. Validate data messages only after two identical successive data messages have been received. After validation, generate a strobe signal to enable transfer of data to an output buffer.

b. Trains traveling at track speed (the posted speed limit for yard is 8 mph) shall be able to transmit four complete data messages per antenna lobe, even in the event that other transponders are over other loops controlled by the same interrogator. Assume zero speed for loops within the platform.

c. Wayside control equipment shall query a transponder, and successfully receive and decode data messages from that transponder. Loop antenna shall activate and receive data messages from transponders within range. Transmit 19-bit output plus loop identifier bits to TCS equipment in the signal room.

d. Interrogator shall provide automatic tuning of wayside loops without the use of passive tuning devices at the loop.

e. Interface circuitry, raceway, and cabling shal meet functional requirements. Electronic circuitry, except power supplies shall be on removable printed-circuit cards. No more than four loops may be controlled from a single interrogator.

f. Lifespan: Design for a 30-year life in wet and dry applications.

g. Maintenance Connection: RS232 serial data or ethernet.

h. Loop to Interrogator Distance: 1,200 feet maximum with minimum #12AWG shielded cable as data cable and 2,130 feet maximum with 75ohm coaxial cable.

i. Loop Antenna Receive Frequency: 90kHz to 100 kHz.

j. Transmission Speed: 2kbits/s minimum.

k. Circuit Cards:

1) Design data from output buffer to be transmitted to application circuit cards or serial interface.

2) Design circuit cards with relay contact closure(s) to enable route request Signal Vital Processor (SVP) logic to act upon messages transmitted from the train.

3) Contacts: Rated 0-24 Vdc at 2.0 A.

4) Application Outputs: In accordance with Construction Drawings and described herein.

l. Expandability:

1) TWC equipment must also be capable of being expanded to include additional outputs.

2) Each interrogator rack must contain sufficient backplane wiring, power supply capacity, and spare printed-circuit board socket capacity to allow for the following outputs in addition to outputs required for the present system:

a) Buffered parallel output suitable for direct connection to a microcomputer driven electronic passenger information display on the wayside.

b) Buffered relay output to call additional routes.

3) In the event that a 19-inch interrogator rack controls more than one loop antenna, that interrogator rack shall contain sufficient capacity to provide additional outpus, described above, for each loop.

m. Leads: Provide leads continuous from interrogator terminal strip to loop converter located at the TWC loop. Construct in accordance with manufacturer's recommendations. Include amplifiers, loop converter and junction boxes. Minimum 12 AWG shielded stranded copper conductor for TWC data cable and 14 AWG twisted pair for loop converter power.

4. Pre-Fabricated TWC Loops:

a. Fabricate loops in accordance with approved detailed mechanical layout drawing. Loop shall be six foot six inches long and twenty-eight inches wide. Assembly shall be made of fiberglass with 12 AWG wire in figure 8 configuration. Wire leads from loop shall be in recess in bottom of assembly such that they may be spliced and extended with twisted pair wiring to nearby JB with loop converter.

b. Construction shall include features as follows:

1) Quarter inch crown along longitudinal axis.

2) Aggressive non-skid texture on top of loop assembly.

3) A finish of sky cap gray gelcoat or approved equal, minimum thickness 0.02 inches.

5. TWC Data Requirements:

a. Design wayside TWC equipment to receive and process a 19-bit data message from carborne transponders.

b. Design wayside interrogators to process the following information from LRVs via wayside loop antennas:

1) Active Cab:

a) Train Number (00-99) – 7 bits.

b) Destination Number (00-99) – 7 bits.

c) Stationary Pre-empt / Activation button in cab – 1 bit.

d) Cancel (Route) button in cab – 1 bit.

e) Switch Call (Left or Right) button in cab – 2 bits.

f) Active Cab (on for active cab) – 1 bit.

2) Intermediate (rear-end, inactive) Cabs (for multiple-unit consists only):

a) Car Number (000-999) – 10 bits.

b) Active Cab (off for intermediate cab) – 1 bit.

c) End-of-train (off for intermediate cab) – 1 bit.

d) Spare – 7 bits.

3) Trailing (rear-end, end-of-train, inactive) cab:

a) Car Number (000-999) – 10 bits.

b) Active Cab (off for trailing cab) – 1 bit.

c) End-of-train (on for trailing cab) – 1 bit.

d) Spare – 7 bits.

TABLE 1

Data Code Format (Truth Table)

Train/Wayside Communication System

	Transponder Data Bits - Lead Cab																		
	1	2	3	4	5	6	7	8	9	10	11	12	13	14	15	16	17	18	19
Binary Weight		1	2	4	8	16	32	64			1	2	4	8	16	32			64
Lead Cab	L	D	D	D	D	D	D	D	P	C	T	T	T	T	T	T	S	S	T
Logic Level Right	1	X	X	X	X	X	X	X			X	X	X	X	X	X		1	X
Left																	1		
Pre-empt ("Call")									1										
Cancel										1									

	Transponder Data Bits - Non-Lead Cab																		
	1	2	3	4	5	6	7	8	9	10	11	12	13	14	15	16	17	18	19
Binary Weight		1	2	4	8	16	32	64	AA	BB	CC								
Non-Lead Cab	NL	C	C	C	C	C	C	C	C	C	C	SP	SP	SP	SP	SP	SP	SP	RC
Logic Level Inter-mediate Cab	0	X	X	X	X	X	X	X	X	X	X	X	X	X	X	X	X	X	
Rear End-of-Train																			0 1

LEGEND

AA	=	Binary 128	CAN	=	Cancel
BB	=	Binary 256	D	=	Destination Number (0 through 99) See Table 2 for list of destination codes.
CC	=	Binary 512	S	=	Track Switch Control (Left or Right)
C	=	Car Number (0 through 999)	SP	=	Spare
RC	=	Rear Cab (Signal from Tail Lamps)	T	=	Train Number (00 through 99)
LC	=	Lead Cab (Front End)	X	=	High or Low Logic Level (Left LSB, Right MSB)
NL	=	Non-Lead Cab (Intermediate Cab or Trailing Cab)	1	=	High Logic Level
P	=	Pre-empt or "CALL"	0	=	Low Logic Level

6. Loop Converter

a. Loop converter tuning device.

1) Tune TWC loop automatically or at interrogator with manual selection.

2) Loop converter shall not require passive component tuning at TWC loop.

7. TWC Destination Codes

Sound Transit – TWC Destination Codes – These destinations reflect existing yard and mainline. The Final List of TWC Destination Codes must be confirmed with Sound Transit prior to masking interrogators:

CODE	DESTINATION
00	Turnback Area
01	Storage Track 1
02	Storage Track 2
03	Storage Track 3
04	Storage Track 4
05	Storage Track 5
06	Storage Track 6
07	Storage Track 7
08	Storage Track 8
09	Storage Track 9
10	Storage Track 10
11	Storage Track 11
12	Storage Track 12
13	Storage Track 13
14	Run-Around Track East Side
15	YC Holding Track East Side
16	YA – YC Connection Track
17	YC Holding Track East Side (normal approach)
18	Approach Track to Destination 15
19	Spare
20	Run-Around Track West Side
21	Shop Track 1
22	Shop Track 2
23	Shop Track 3
24	Shop Track 4
25	Shop Track 5

26	Shop Track 6
27	Shop Track 7
28	Shop Track 8
29	Yard Operations, Car Wash; Mainline, WLS SB Platform TB
30	YA Track
31	YC Track
32	Pine Stree Interlocking
33	Royal Brougham Pocket
34	University of Washington Terminal
35	Northgate Terminal
36	Northgate Pocket
37	Lynwood Terminal
38-39	Spare

F. Local Control Panel:

1. Design LCPs capable of requesting/controlling wayside signal equipment. Design software package and test procedures to provide required LCP functionality.

2. Any signal device that can be controlled via Train to Wayside Communications (TWC) request or Train Control System (TCS) shall be able to be controlled by the LCP.

3. Design LCP to use same graphics, icons, and functions as existing Sound Transit Yard LCP screens. Ensure symbols are not too crowded to be seen and text fonts are readable.

4. Software:

   a. Approved Application: Panel LCP software shall not involve license cost to Sound Transit.

   b. Operating System: Microsoft Windows; current version at time of installation.

5. Panel Indications:

   a. Indication Icons: Icons shall be circles unless representing field equipment, field equipment icons shall display the equipment number.

   b. Track Circuits:

      1) Panel design is based on track layout of the hemisphere. Switch position indication is a continuous line in the direction the switch is aligned and a gap in the alternative direction.

      2) Color: Red if occupied, white if unoccupied.

3) Show indications for track circuits that are in the hemisphere or are a track circuit for runaround track between the hemispheres.

c. Switches:

1) Each switch shall have indications (square with an inscribed N or R, with a round indicator above) along the bottom of the panel. Green – normal, yellow – reverse, a switch machine symbol below the colored indicators (‘white’ for unlocked – ‘red’ for locked).

d. Numerical Signs: The numerical sign indicators shall be 2 digit displays shown in the panel track structure. The panel shall faithfully match the display of the field signs with respect to display content and flashing or solid.

e. TWC indication: Indicate the location of each TWC loop, a green rectangle with the destination inscribed, which shall illuminate when selected as an entrance for local control NX route or if that is the TWC loop which is inputting a destination request.

f. Traffic:

1) Indicate current direction of traffic between panel location and adjacent locations.

2) Traffic icons: arrows for each track with traffic circuit.

3) Direction of traffic: Green arrow if traffic can be reversed, red if traffic is locked.

4) Opposite to Direction of Traffic: Dark arrow.

5) Default Display: both direction traffic arrows colored.

g. Operations Mode:

1) Modes: Local, automatic.

2) Mode Icons: One for each mode, default color gray, active mode displays red.

h. Communications Status:

1) Communications Link: Gray if normal, red if there is a fault on any of the processor serial ports.

2) Modem Health: Icon for each adjacent location, Grey if normal, red if there is a loss of communication to the adjacent SVP.

3) DC Power Off: One icon at top of panel, red if a DC power supply at the location contains a fault.

4) Ground Fault: One icon at top of panel, red if fault, gray if normal.

5) Mode Indication: One red round indication labeled AUTO and one red round indication LOCAL. The mode in control will illuminate.

i. Provide indication of switch snowmelter subsystem status. Indication that temperature is low enough to trigger snowmelter, indication that moisture

is present, indication of which snowmelters in that hemisphere are energized at the present time.

6. Panel Controls:

a. Control Icons: Icons shall be square or rectangular, inscribed with letters.

1) Operations:

a) Design each control to have an associated icon.

b) Select icons by pointing and clicking mouse.

c) Automatically ignore pending controls from LCP if Local Control mode has not been established.

b. Master Cancel:

1) Normal display is gray inscribed with “Master Cancel Off”.

2) Click icon to activate. Activated icon displays red inscribed with “Master Cancel On”.

3) Activation of Master Cancel enables pointer to select control function to be cancelled.

c. Switch Request:

1) Two icons for each switch which double as switch indications, one to call switch normal, one to call switch reverse.

2) Design switch request icon corresponding to last position requested to remain lit.

d. Local Request: Momentary icon, requests Local Control of interlocking/yard control, default color is gray, display when activated.

e. Local Off: Momentary icon, cancels Local Control of interlocking/yard control, default color is gray, display green when clicked.

f. Entrance/Exit Procedure:

1) Select an entrance by clicking a TWC icon.

2) Select desired exit by clicking a TWC icon associated with an available exit destination.

3) Track circuit structure switch indications shall show the switches being thrown once exit has been selected.

4) Entrance selected clears in 15 seconds if no exit is selected.

7. Source Quality Control:

a. Factory Design Test:

1) Use one interlocking/yard control LCP as test panel.

2) Design a comprehensive test of LCP functions.

3) Exercise routes, auxiliary switch controls and indications, alarms, health status indications, and display and control of TWC and LCP routing functions, numerical signs, adjacent location inerfaces, and snowmelter subsystem interfaces.

8. Signal Maintenance Computer (SMC):

a. Provide a computer system capable of interfacing to and troubleshooting TWC equipment, event recorders, NVP, a laptop computer, and SVP system at each signal equipment room.

b. Ensure it shall not be possible to alter either vital or non-vital application logic using SMC.

c. Functions to be handled by this computer include but are not limited to:

1) Local Control Panel.

2) SVP Diagnostic Tool: Normally associated with SVP systems (both vital and non-vital), provides access to diagnostic, status, and troubleshooting information.

d. Design layout to supply SMC and peripherals with forced-air ventilation.

e. SMC and Peripherals: Hardened for industrial environment, rack mounted, provide SMC complete with:

1) Optical mouse, sealed industrial keyboard, and keyboard drawer.

2) Keyboard drawer: Room to house keyboard, space for mouse use.

3) Flat-panel display with minimum viewing are of 19-inches measured diagnolly.

4) Optical Drive: DVD/CD-ROM writer.

5) Storage: 250G hard drive.

6) RAM: Minimum 4G

7) 10/100 Ethernet port.

8) Two unused USB Ports.

9) One unused RS-232 serial port.

10) Operating system and Microsoft Office application software.

f. Provide permanent connections between SMC and systems it is designed to interface with. Use of AB switches or other hardware devices to perform required interfaces is allowed.

g. Provide latest and fastest version industry-standard, commercially-available CPU that has been available for a minimum of four months through multiple resellers or distributors and has been in use for general production by two of the top five computer manufacturers.

PART 3 - EXECUTION

3.01 ERECTION/ INSTALLATION/ APPLICATION/ CONSTRUCTION

A. Track Circuits:

1. Adjust track circuits in accordance with approved calculations, and record readings on approved form.

2. Install track relays in approved signal locations.

3. Cable Connections must be Cembre bolted rail connections.

4. Power frequency track circuit cable size: No. 6 AWG minimum size twisted pair wire.

5. Route cable in conduit for PF track circuit.

6. For PSO/AFTAC No. 14 AWG minimum size twisted pair from bungalow to JB and No. 6 AWG from JB to rail connection. Provide couplers and mount per the manufacturer's manual.

7. Provide fuses with minimum rating of 10 amps in series with wires connecting to the rails for track circuits.

8. Provide insulated copper, #14 AWG (minimum), for track circuit wires and cables in signal equipment rooms.

9. Use twisted pairs for track circuit wires.

10. Dress wire neatly and firmly. When passing beneath a rail protect the cable with hose or other device.

11. Run wires and cable that attach to rails along the side of ties.

12. Fasten wires and cables that attach to rails using rail clips.

B. TWC:

1. Interrogator:

a. Mount interrogator equipment in racks in signal equipment rooms. Provide inputs to non-vital portion of SVP.

2. TWC Loop Installation:

a. Provide as shown in design drawings. Provide cabling, loop converter, and junction boxes necessary to accomplish the required functions.

b. Install between the rails from 0 to 1.5 inches below top of rail. Connect to TWC interrogator by interrogator lead and loop converter.

C. LCP:

1. Mount SMC monitor and keyboard drawer at height to permit seated operator comfortably use mouse, sealed keyboard, and view monitor.

2. Mount computer in a rack at end of a row of racks to facilitate ease of use by personnel. Mount as close as possible to fold up plan desk.

D. Numerical Signs:

1. Install numerical signs as indicated on approved design drawings.

2. Install conduits to connect numerical sign to conduit stub-ups via the pole base junction box.

3. Run cable inside pole to numerical sign.

4. Provide foundation, anchor bolts in direct fixation, mount to SC ductbank, or mount to anchor bolts as indicated for the specific numerical sign location in the drawings.

5. Install split-base junction box opening away from the direction of normal LRV traffic.

6. Ground numerical sign with green insulation #6wire.

7. Furnish and install ground rods at ballasted numerical sign locations.

8. Provide pigtails to bond numerical sign to grounding system at direct fixation locations.

9. Make ground connection four inches above grade to facilitate maintenance inspection.

10. Ground resistance must be 15 Ohms max.

END OF SECTION

SECTION 34 42 07

PRE-CAST CONCRETE FOUNDATION

PART 1 - GENERAL

1.01 SUMMARY

A. Section includes:

1. Requirement for the following:

a. To furnish and install pre-cast concrete foundation, complete with galvanized anchor bolts, washers, and nuts for signal equipment and wayside enclosures as shown on the Contract Drawings.

b. Size foundations to exceed the structural loading calculations for the installation.

1.02 REFERENCES

A. This section incorporates by reference the latest revisions of the following documents:

1. American Railway Engineering and Maintenance-of-Way (AREMA):

a. AREMA Communications & Signals Manual (AREMA C&S Manual):

1) Part 14.4 Recommended Foundations.

2) Part 14.6.20 Recommended Design Criteria for Bolts, Nuts and Threads.

3) Part 14.6.21 Recommended Design Criteria for Plain and Spring Lock Washers.

4) Part 15.1.4 Recommended Developmental Criteria for Various Types of Steel.

5) Part 15.3.1.C Galvanized Hot-Dipped Coating Criteria.

2. Washington State Department of Transportation (WSDOT).

a. WSDOT Standard Specifications for Road, Bridge, and Municipal Construction (WSDOT Standard Specifications)submittals

1.03 SUBMITTALS

A. Shop Drawings: Include:

1. Physical dimensions.

2. Bolt spacing

3. Reinforcing Steel.

4. Size and detail of galvanized bolts, nuts, and washers.

B. Structural loading calculations, signed and sealed by a Licensed Washington State Structural Engineer.

C. Installation drawings for foundations.

D. As-built drawings for foundations.

E. Test Reports:

1. Test reports for compressive strength tests of concrete samples conducted by the Structural Testing Laboratory, before shipping.

F. Qualifications Testing Laboratory:

1. Submit qualifications demonstrating minimum five years' experience testing compressive strength of concrete.

G. Records:

1. Provide a copy of fabricator's records showing date and conditions of fabrication of each pre-cast unit, including the following:

a. Type of fabricator's building or enclosure.

b. Form material used.

c. Curing procedures, (steam or water).

d. Temperature ranges.

e. Air entrainment content.

f. Water-cement ratio.

g. Method of finishing units.

1.04 QUALITY ASSURANCE

A. Concrete for pre-cast foundations shall be in accordance with AREMA, Part 14.4.

B. Galvanizing shall conform to the AREMA Signal Manual, Part 15.3.1.

1.05 DELIVER, STORAGE, AND HANDLING

A. Protect material from damage throughout delivery, storage, and handling.

B. Equipment damaged in transit of by mishandling or improper storage shall be replaced by the Contractor at no additional cost to Sound Transit.

PART 2 - PRODUCTS

2.01 MATERIALS

A. Pre-cast Concrete Foundations:

1. Concrete of average compressive strength of 5000 PSI.

2. Manufactured in accordance with the applicable drawing Section of the AREMA, Part 14.4 Pre-cast Concrete Foundation and the bungalow manufacturer's recommendations.

3. Pre-cast concrete foundations shall be steel reinforced. Reinforcing steel shall be placed not less than one inch from any outside surface.

B. Bolts, Nuts and Hardware:

1. Bolts, nuts, and washers shall be galvanized.

2. Manufactured in accordance with AREMA, Part 14.6.20 for Bolts, Nuts and Threads.

3. Plain washers shall be in accordance with AREMA, Part 14.6.21 for Plain and Spring Lock Washers.

4. Steel shall be in accordance with AREMA, Part 15.1.4, Section 1 for Various Types of Steel.

C. Like material of crushed stone, gravel, or other suitable course granular material shall be used as back fill for cribbing as removed to install foundations, in accordance with Washington State Department of Transportation (WSDOT) Standard Specification Section 9-03.9 Aggregates for Ballast and Crushed Surfacing.

2.02 FINISHES

A. Treat and rub surface of foundation exposed to view if it does not present a uniformly clean surface of even texture and appearance, subject to approval by Sound Transit.

2.03 SOURCE QUALITY CONTROL

A. Test representative specimens of concrete poured during fabrication of pre-cast units for compressive strength of concrete by approved Structural Testing Laboratory.

B. Pre-cast fabricator shall keep a permanent record of date and conditions of casting of each unit.

PART 3 - EXECUTION

3.01 PREPARATION

A. Prior to placing pre-cast foundations, the excavations and installations of crushed stone base shall be placed and compacted to 95 percent of original density.

3.02 INSTALLATION

A. When placing foundations, exercise care to ensure that anchor bolts are not bent, or threads damaged. Protect all anchor bolt threads, washers and nuts by applying friction tape, or other approved method satisfactory to Sound Transit, until such time as the unit to be supported is installed.

B. If bolts are damaged or bent, replace foundation at no additional cost to Sound Transit.

C. If the surfaces of all foundation exposed to view do not present a uniformly clean surface of even texture and appearance, treat, and rub the surfaces to obtain a satisfactory finish, subject to approval by Sound Transit.

D. After back filling foundations, ensure that the foundation is plumb and level. Top of final grade shall be eight inches below top of foundation. Foundation height shall consider signal height requirements for operator sighting and visibility.

E. Foundation must include provisions for conduit stub-ups and ground conductors that provide 4 inches of ground clearance for connections.

F. Ensure the apparatus footprint is coordinated and the foundation is sized appropriately.

G. Foundations shall be coordinated with other civil works (e.g... walkways or curbs) and positioned to avoid conflicts.

END OF SECTION

SECTION 34 42 08

EXTERNAL SIGNAL CABLE

PART 1 - GENERAL

1.01 SUMMARY

A. Section includes:

1. Requirements for external cable manufacture, testing, and installation.

1.02 REFERENCES

A. This Section incorporates by reference the latest revisions of the following documents:

1. American Railway Engineering and Maintenance-of-Way Association Signal & Communications Manual of Recommended Practices (AREMA):

a. Part 10 – Wire and Cable.

b. Part 13 – Mechanical.

c. Part 14 – Electrical Devices, Foundations, and Hardware.

2. American Society for Testing and Materials International (ASTM):

a. ASTM B3 - Specification for Soft or Annealed Copper Wire.

b. ASTM B8 - Standard Specification for Concentric-Lay-Stranded Copper Conductors, Hard, Medium-Hard, or Soft.

c. ASTM D570 - Standard Test Method for Water Absorption of Plastics.

3. Insulated Cable Engineers Association (ICEA):

a. ICEA S-95-658 - Power Cables Rated 2000 Volt or Less for the Distribution of Electrical Energy.

b. ICEA T-33-655 Low Smoke, Halogen-Free Polymeric Jackets.

4. Institute of Electrical and Electronic Engineers (IEEE):

a. IEEE 1202 - Standard for Flame Testing of Cables for Use in Cable Tray in Industrial and Commercial Occupancies.

5. National Electrical Contractors Association (NECA):

a. NECA 1 - Standard Practice of Good Workmanship in Electrical Construction

6. National Fire Protection Association (NFPA):

a. NFPA 70 - National Electrical Code (NEC).

b. NFPA 130 - Standard for Fixed Guideway Transit and Passenger Rail Systems.

7. Underwriter's Laboratories (UL):

a. UL 224 - Standard Test Method for Water Absorption of Plastics.

1.03 SUBMITTALS

A. Product Data: Manufacture product datasheets and complete technical data for the cable and ancillary devices proposed to furnish demonstrating compliance with requirements off these Specifications for each proposed cable type.

B. Cable Manufacturer Documents including qualification data.

C. Cable Installation Plans and Cable Pulling Report: In accordance with requirements of NEC and per manufacturer's recommendations.

D. Testing Documents: Provide certified test reports for factory testing of signal cables.

E. Quality Assurance Program.

F. Source Quality Control: Submit results of Factory Design Tests and Factory Production Tests.

G. Voltage Drop Calculations

H. As-built drawings showing actual installation and routing of conduits, junction boxes, bonding and cables.

1.04 QUALITY ASSURANCE

A. Manufacturer Qualifications:

1. Manufacturer must supply evidence of a minimum of 15 years reliable experience in supplying vital circuit signal cables of type specified on at least five Class I railroads or transit properties with a minimum of 2,000,000 cable feet installed.

2. A letter from each proposed wire and cable manufacturer, on manufacturer's letterhead, certifying that proposed manufacturer has a copy of the Contract Section 34 42 08 - External Signal Cable and proposed manufacturer will fully comply with requirements of these Specifications.

3. Quality Assurance Program: Demonstrate compliance with Quality Assurance Program that ensures a thoroughly tested cable with long service life. Focus will be on formal assurance that cable failure cannot be attributed to actions or lack of actions by the manufacturer.

B. Wires and cables must meet or surpass tests and requirements specified in AREMA, Part 10.3.

1.05 DELIVERY, STORAGE AND HANDLING

A. Delivery and Acceptance Requirements:

1. Shipping:

a. Provide cable closely and tightly wound in a uniform manner, in each layer, on reels. Wind each length of cable on a separate reel.

b. Manufacturer is responsible for change in shape of cable occurring in normal transit which results in an increase in maximum diameter beyond that specified.

c. External protective wrapping on reels must be secured by at least two steel bands to ensure damage free shipment.

B. Reels:

1. Diameter: Minimum 12 times cable diameter.

2. Arbor Hole: Admit a spindle 2-1/2 inches in diameter without binding.

3. Maximum Width: 48 inches.

4. Mark reel with weather resistant tags, identifying the amount of wire per continuous length and the number of lengths. The following information must be included on the tags:

a. Purchaser's Specification number.

b. Specification sheet number, if applicable.

c. Wire size and stranding.

d. Date of manufacture.

e. Name of manufacturer.

f. Cable description, if applicable.

C. Cable Ends:

1. If inner end of cable projects through flange of reel, protect inner end with suitable cover of metal, having rounded ends and sides, and securely fastened in place to protect cable end.

2. Secure both ends of cable on reel to prevent their becoming loose in transit or handling of reel. Secure inner end of cable but ensure it is accessible and protected from injury.

3. Protect both ends of each length of cable with wrappings of rubber and plastic tape, or an effective boot taped or sealed into place. Seal cable against entrance of moisture after passing factory tests.

4. Do not use friction tape, other than an external mechanical protection over an adequate rubber and/or plastic tape.

5. Provide cable end protection adequate to protect cable in shipment and prolonged external storage in the weather:

a. Markings: Paint an arrow on one head of each reel, greater than 38 inches, pointing opposite direction from outer end of cable with words "Roll This Way". Provide letters not less than 3/4-inch height and an arrow not less than 6 inches in length and 1/2 inch in width.

D. Handling Requirements: In accordance with AREMA Part 10.4.1.

E. Storage: Store wire and cable in secure and dry storage facility, in accordance with National Electrical Contractors Association (NECA) 1.

PART 2 - PRODUCTS

2.01 PERFORMANCE REQUIREMENTS

A. Provide cable required for Signal System wiring, external to signal rooms and factory wired mechanisms.

B. Size conductors and cable makeup for application of Contractor's final design. Increases in required conductor size must be in accordance with National Electrical Code. Size conductors to allow no more than a five percent voltage drop between power source and load, under maximum calculated load conditions. Use larger conductors if required to meet equipment manufacturer's application requirements.

C. No point-to-point redundancy of wires for increased current capacity is allowed. Cables for equipment in tunnel right of way must be run in their respective bores.

D. Power Feeder cables to signal houses or cases or any cable carrying higher than 120 volts must be run in separate conduit from any signal equipment cables.

2.02 MANUFACTURED PRODUCTS

A. Cable:

1. General:

a. Environment: Minus 40 to 90 degrees C.

b. Rated life: 40 years minimum.

2. Individual Conductors:

a. Material: Soft annealed copper conforming to ASTM B3.

b. Resistance: Conforming to ICEA S-95-658.

c. Stranding: Class B conforming to ASTM B8.

d. Conductors: Free of longitudinal or lateral nicks and scratches, uniform in gauge.

3. Insulation:

a. Material: Vulcanized ethylene-propylene rubber (EPR) compound, in accordance with AREMA Part 10.3.19, homogeneous in character, tough, elastic, tight fitting, and applied concentrically about conductor.

b. For Tunnel applications the cable must meet requirements of NFPA130 (Fixed Guideway Transit and Passenger Rail Systems) part 12.2 for flame spread and smoke release. The manufacturer must select insulation materials as necessary to meet these requirements. Voltage Rating: 600 V.

c. Insulating Compound: Clean and free stripping, leaving conductor upon stripping, unimpaired, and ready for termination.

d. Thickness: Minimum thickness in accordance with Table 10316-1, AREMA Part 10.3.16.

e. Identification: Numbers (both number and work number, i.e. "1 - one") in accordance with ICEA, Method 4; duplicated on opposite sides of each conductor at intervals of not more than 6 inches.

f. Manufacturer must formulate and compound conductor insulating materials in their own plant. Conductor insulating materials and cable outer coverings must also be applied, assembled, and tested in their own plant(s).

4. Wire and Cable Jacket:

a. Physical Characteristics: black, low-density, extruded over insulation, in accordance with ICEA S-95-658.

b. Non-tunnel applications, only: high-molecular weight polyethylene (PE) compound, in accordance with AREMA Part 10.3.21.

c. Tunnel applications: cross-linked polyolefin (XLPO), low smoke zero halogen (LSZH), in accordance with AREMA Part 10.3.13. This cable type may also be used for non-tunnel applications.

d. Thickness: Minimum thickness in accordance with Table 10316-4 in AREMA Part 10.3.16.

5. Multi-Conductor Cables:

a. Assembly: Comply with requirements of ICEA S-95-658 and AREMA Part 10.3.16, Recommended Design Criteria for Signal Cable, Non-Armored.

b. Fillers: comply with AREMA Part 10.3.16, Recommended Design Criteria for Signal Cable, Non-Armored.

c. Track Circuit Cable: Twisted Pair Lay Ratio: 12 times circumscribed diameter of cable pair.

B. Signal System Cable Types:

1. Audio Frequency Track Circuits: Twisted pair No. 14 (minimum) AWG conductors.

2. Power Frequency Track Circuit House Connections: Twisted pair No. 6 (minimum) AWG conductors (from signal room to trackside junction box).

3. Power Frequency Track Circuit Rail Connection Cable: Two No. 6 (minimum) AWG conductors (from trackside junction box to rail).

4. Switch-and-Lock Movements:

a. Power: Three, No. 6 (minimum) AWG conductors, for long cable runs up size the cable to ensure proper operation and performance of the switch machine installed.

b. Control: Twelve, No. 14 (minimum) AWG conductors.

5. TWC Interrogator Cable: Two, Twisted pairs No. 12 AWG (minimum) shielded.

6. Power Feeders: For signal houses, switch heater cases, and TWC case power furnish cables meeting or exceeding wire size as required by the NEC. Allow a 5

percent maximum voltage drop. Minimum power feeder size must be Two, No. 6 (minimum) AWG with a ground.

7. LRV Signals:

   a. Three-Aspect: Seven conductor, No. 14 (minimum) AWG.

   b. Two-Aspect: Five conductor, No. 14 (minimum) AWG.

   c. Multi-Aspect Alpha-Numeric: Minimum of two more than the working wires required by the signal, No 14 (minimum) AWG.

8. Rail Temperature Sensor: Five conductor, No. 14 AWG from the control cabinet to the rail temperature sensor junction box.

9. Vital Link from Signal House to Crossing House, Yard Signal House, or remote Signal House/ Case: 12 or 19 conductor, No. 14 AWG if a vital serial link is not practical.

10. Gate 12 volt power to motor: Three conductor No. 6 (minimum) AWG. Power calculations should demonstrate the adequacy of the conductor size.

11. Crossing Flashers: Seven conductor No. 9 (minimum) AWG.

12. Gate Control: Seven conductor No. 14 (minimum) AWG, for both bell driver and indications of gate position.

13. Speed Command Loops:

    a. Single conductor, No. 8 AWG.

    b. Class C (19 strand):

    c. 60 mils of heat and moisture resistant, ethylene propylene rubber (EPR) insulation.

    d. 80 mils of heat, moisture, and UV resistant, polyurethane (PUR) jacket.

14. Traction power return and power bonding cables: 250 kcmil 646 stranding and 500 kcmil 1225 stranding.

15. Switch heating element power and control cables: size, jacket, and insulation in accordance with specification section on low-voltage conductors and cables.

16. Use single conductor No. 14 wire for interconnecting signal junction boxes with other miscellaneous equipment.

17. Spare Audio Frequency Track Circuit Cables: Provide and test a spare audio frequency track circuit cable (two conductors) to north and south of each signal room for each track. Install each spare track cable to far-end, of farthest track circuit controlled from signal room for each track. Terminate cable in junction box at that location.

2.03 COMPONENTS

A. Identification:

1. Single Conductor Cable: Print manufacturer, year of manufacture, voltage rating, and wire size on surface of jacket; maximum interval 24 inches.

2. Multi-Conductor Cable: Moisture resistant marker tape under jacket and on the surface of outer jacket parallel to longitudinal axis of cable; print manufacturer, year of manufacture, voltage rating, number of conductors, and wire size; maximum interval 30 inches.

3. Wire Tags:

a. Approved Manufacturers: Brady HEATEX™ labels or approved equal.

b. Material: Polyolefin heat shrinkable tubing.

c. Standards: UL224 and ASTM D570.

d. Print: Cable origin, function, and destination.

4. Cable Tags:

a. Non-fading, plastic, printed cable tags with holes for attachment to cable with nylon cable ties.

b. Product: Almetek Industries E-Z Tags with plastic slide in holder or approved equal. Size 2 inch by 3/4 - inch.

c. Print: Cable destination and number of conductors in cable as described in Contract Drawings.

2.04 INSTALLATION MATERIALS AND EQUIPMENT

A. Cable Pulling Lubricant: Selection of cable pulling lubricant must be based on type of cable and ambient conditions. Product must be non-petroleum based that will not damage cable sheathing or insulation or cause corrosion to metal boxes or hardware of the raceway or signal system:

1. Product must be approved by the cable manufacturer.

2. Product must meet the requirements of IEEE 1210.

3. For non-low smoke cable provide lubricant selected based on the ambient temperature. For normal ambient temperature lubricate with Polywater J; or WJ; or approved equal.

4. Where a lower temperature causes a need for a lower coefficient of friction utilize Aqua-Gel or Aqua-Gel CW; or approved equal.

B. Where low smoke cable is used, such as in a tunnel, use a Low Smoke Cable Pulling Lubricant product specifically formulated to work with that material such as Polywater LZ; or approved equal.

C. Concrete Tie, Rail Cable, and Wire Clips: Stainless steel.

D. Terminals: Stranded wire, compression-type, insulated wire terminals, in accordance with AREMA Part 14.1.1 and the following solderless insulated crimp terminals:

1. Terminals must have insulation support designed in such as the Tyco AMP PIDG series with catalogue numbers identified for a one-quarter in stud. For terminating on another size stud the Contractor must select an alternative part number of the same type.

2. For terminating insulated wires AWG 12 – 10 – AMP part number 35273.

3. For terminating insulated wires AWG 14 – 16 – AMP part number 320563

4. For terminating insulated wires AWG 22 – 16 – AMP part number 320571

E. Crimp Tools:

1. Type: Ratchet, does not release unless wire terminal has been compressed to proper thickness.

2. Calibration: At manufacturer's specified intervals, use gauges provided by crimp tool manufacturer.

2.05 SOURCE QUALITY CONTROL

A. Factory Design Tests:

1. Wire and cable manufacturers must meet the following qualification requirements for synthetic rubber insulation, in order to be approved for use on these signal circuits. Insulation failure must not occur during these tests. Supply full documentation on tests and test results.

a. Voltage Aging Test (Dry): Test sample in free air with a minimum of 10 feet between terminals, continuously energize insulated conductor, without coverings over insulation, in accordance with one of the following stresses to voltage age the sample shown below in Table A.

b. Voltage Aging Test (Wet): Immerse test sample in at least 10 feet of water at room temperature, ground shield, continuously energize insulated conductor, without coverings over insulation, in accordance with one of the conditions shown below in Table B.

c. Step-Voltage Test: Apply test voltages of 60 Hz ac increased in 10 kV steps for 5 minutes at each step to voltage-aged sample until breakdown occurs. Breakdown must be at a test voltage level greater than 350 volts/mil.

d. Thermal Aging Test: Test sample in a circulating-air oven using 80-mil-thick slabs. Elongation must not be less than 50 percent after a minimum aging time of 25 hours at 135 degrees C and 100 hours at 121 degrees C.

e. Insulation Test: In accordance with ICEA S-95-658.

f. Jacket Test: In accordance with ICEA T-33-655.

Table A

60 Hz AC VOLTAGE PER MIL OF INSULATION	TIME - YEARS
225	2
180	3
135	5

Table B

DC VOLTAGE PER MIL OF INSULATION	TIME - YEARS
325	2
280	3
240	4
200	6

B. Factory Production Tests:

1. Samples:

   a. Production testing in accordance with ICEA S-95-658.

2. Test Reports: List test results, date tests were performed, and signature of person who conducted tests.

3. Insulation:

   a. Physical and Electrical Characteristic Tests: In accordance with AREMA Part 10.3.19.

   b. Polyethylene Jacket: In accordance with AREMA Part 10.3.21.

   c. Impedance Bond Cable Test: In accordance with AREMA Part 10.3.19 and American Association of Railroads (AAR) Specification 581.3.

4. Perform Dry, Ac Voltage (Wet Tank), and Insulation Resistance Conductor tests on every individual length of insulated conductor, prior to application of outer jacket or braid and prior to cabling or twisting.

5. Perform Ac Voltage, Insulation Resistance Cable, and Dc Resistance final tests on every conductor in every individual length of finished cable, while on shipping reel.

6. Ac Voltage, Dc Voltage, Dc Spark Test: In accordance with NEMA HP 100.

7. Insulation Resistance Conductor Testing: In accordance with AREMA Part 10.3.16 or ICEA S-95-658.

8. Insulation Resistance Cable Test: In accordance with AREMA Part 10.3.19. Perform after ac voltage test.

9. Dc Resistance Test: In accordance with ICEA S-95-658.

10. Test every individual length of completed shielded cable for shield continuity.

PART 3 - EXECUTION

3.01 INSTALLATION

A. Cable installation must be in accordance with NEC and manufacturer's recommendations.

B. All signal cable runs must be continuous, without splices between cable terminating locations. No splices will be allowed in vital or non-vital signal cables.

C. Access Point Wiring: Cables must be labeled or tagged at each access point where cable is pulled through.

3.02 TERMINATIONS

A. Termination Technique: Use tools and techniques recommended by terminal manufacturer.

B. Terminate cables on AAR terminals with maximum two wires on one AAR terminal binding post. Provide strain relief where needed. Provide sufficient slack in cable conductors at terminating posts to enable three re-terminations of conductors without re-servicing or re-dressing cable. Provide sufficient slack for shock and vibration induced movements, equipment shifting, alignment, cover removal, and component replacement, removal, and inspection.

C. Remove outer sheath of multi-conductor cable such that insulation is not nicked at point of cable entrance. Apply two layers of plastic electrical tape to end of cable sheath or covering to prevent accumulations of moisture or foreign matter.

D. Spares: Terminate spare conductors at entrance rack end and on terminal strips at junction boxes. Properly insulate spare conductors at rails to prevent an unintended connection. Complete connections with double nuts torqued to rated value of nut.

E. Use a single washer on top of terminal for compression-type insulated terminal connections to terminal blocks. Wire terminals require two washers for one terminal, three washers for two terminals.

F. Junction Box Wiring: Terminate external wires and cables at multiple post terminal blocks in accordance with AREMA Part 14.1.6 with wire terminals on one post and link connector type in accordance with AREMA, Figure 14115-1 to complete circuit.

END OF SECTION

SECTION 34 42 11

POWER SWITCH AND LOCK MOVEMENT LAYOUTS

PART 1 - GENERAL

1.01 SUMMARY

A. Section includes:

1. Requirements for the following:

a. Power switch mechanism design, factory testing, and installation.

b. Switch-and-lock movement layout design and installation.

c. Switch heater design and installation.

1.02 REFERENCES

A. This Section incorporates by reference the latest revisions of the following documents:

1. American Railway Engineering and Maintenance-of-Way Association Signal & Communications Manual of Recommended Practices (AREMA):

a. Part 1, General.

b. Part 12, Switches.

1.03 SUBMITTALS

A. Shop Drawings:

1. Drawings for top line assembly of power switch-and-lock movement layouts together with a bill of materials for both point switches and, if applicable movable point frog switches.

2. Installation drawing showing gauge plate extensions and mounting details of power switch-and-lock movement layouts, including connections to track switch points. Coordinate with track design to identify spacing of plinths, interface scope between track and signals, method of assuring electrical isolation from rail to machine and ground and isolation from switch machine to any ground.

3. Installation drawings for the switch snow melting equipment. Include heater type, location, and mounting details as part of drawing submittal.

4. Circuit and installation drawing for switch snow melting equipment control cabinets and schematic of the complete subsystem.

Contract Drawings must identify for each interlocking whether that one needs the complete snow melter equipment, including cabinet, heating elements and sensors, or if that interlocking only requires snow melting infrastructure to enable easy future installation of a snow melter subsystem.

B. Product Data:

1. Description and catalog cut of proposed power switch-machine with sufficient information to identify dimensions and including proven equipment history in North America.

2. Graphite lubricant proposed for use on switch tie plates.

3. Description and catalog cuts of switch heater and controls.

PART 2 - PRODUCTS

2.01 PERFORMANCE REQUIREMENTS

A. Design Requirements:

1. Size Wiring from signal room to switch machine to prevent voltage at machine motor terminals from dropping below 90 percent of voltage (nominal 110 Vac or 110 Vdc) inside signal room, when switch is throwing against an obstruction and a properly adjusted clutch is slipping.

2. Insulate switch layouts to maintain, over life of installation, a minimum of 1,000 ohms resistance between two running rails and also a minimum of 1,000 ohms resistance between running rail and ground and between switch machine and ground .

3. Switch Machines must have method to manually cutout power to the motor at the switch machine.

4. Motor Voltage Range: 110 - 120 VDC or 110-120 VAC.

5. Provide 15 W internal heaters in contact compartment and motor compartments.

B. Switch Heater:

1. Provide rod type heating elements for both the normal and reverse points:

a. 240 Volt with a single ended electrical connection design.

b. 150 watts per foot.

c. Stainless steel construction with a flat side that must be held against the rail by stainless steel clips to maximize thermal transfer to the rail.

2. Crib heating elements, rated for 1,000 W, for the detector, throw, and lock rods.

3. Point heating elements for both the normal and reverse points.

4. Heater Control Cabinet: Provide for each identified interlocking:

a. Steel construction with a NEMA 4 rating.

b. Internal LED lighting.

c. Equipped with internal heater to prevent condensation.

d. Pad lockable door handle

e. Manual ON/OFF/AUTO control switch per location.

5. Provide solid state logic to perform the control function identified herein:

   a. Provide ambient temperature and moisture sensors to control the heating elements, to prevent the energizing of the heating elements when the ambient temperature setting (adjustable) is above freezing or there is no precipitation. Indicate the temperature status and moisture status on the LCP separately.

   b. Separate on/off control for each turnout.

   c. Logic to stagger the start of the heating elements at a location to only one turnout of inrush current.

   d. Logic, rail temperature sensors, and wiring to turn off the elements of a turnout individually when the rail temperature is above trigger point (adjustable) and back on when the rail temperature drops back down. It is permissible, but not essential, that high and low rail temperature are independently adjustable but there must be a minimum of 15 degrees Fahrenheit between the high and low points.

   e. Provide an indication on the signal house Local Control Panel (LCP) and to the LCC SCADA interface to indicate ON if any turnout's heating elements are energized.

   f. Provide a LCP control to manually turn on the heating elements. When the LCP control OR the cabinet MANUAL ON/OFF/AUTO switch request ON it must override the ambient temperature or moisture sensing inputs but must not override the rail temperature sensing feature.

2.02 MATERIALS

A. Power Switch-and-Lock Movement layouts:

1. Switch Machine.

2. Gage plate extensions.

3. Manual Operation: Selector and Hand Throw Levers or Hand crank.

4. Standard: AREMA Communications and Signal Manual, Parts 12.2.1 and 12.2.5.

5. Rods and Hardware:

   a. Offsets: To be provided at time of manufacture.

   b. Front Rods: Swivel type, insulated, adjustable.

   c. Lock Rods: double adjustable type and all hardware.

   d. Detector Rods: Double adjustable type and all hardware.

   e. Throw rods and all hardware. Provide basket connector to track work unless the Contract Documents specifically identify the basket as supplied by others.

   f. Provide a minimum of 8-inch threaded area on each rod to accommodate wide latitude in operating adjustments.

6. All other hardware and adjustments to provide a working switch-and-lock movement.

7. Provide a suitable NEMA 4X junction box suitable for direct fixation installations. For ballasted installations provide the switch machine pedestal mounted JB per the machine manufacturer's recommendations.

8. Junction Boxes with AREMA terminals (JB): In accordance with Section 26 05 33 -Raceway, Boxes, Hangers and Supports for Electrical Systems.

9. Junction Box Wiring: Insulated flex wire, No. 14 AWG, 19 strand, minimum.

10. Lubrication: Graphite or Molybdenum Disulfide (MoS2)

11. Provide all manufacturer recommended lubricants and other consumables.

12. Paint: Black.

B. Conduit from hand hole or junction box of Signals Communications duct bank provided by Civil Contractor.

C. Switch Heater:

1. Control cabinet must be a 12 inch by 12 inch by 6 inch deep stainless steel NEMA 4X Junction box with a hinged lid.

2. Control device junction box must be a 12 inch by 12 inch by 6 inch deep stainless steel NEMA 4X junction box with hinged lid.

3. Heating element power distribution must use minimum 2 inch Galvanized Rigid Steel (GRS) conduit.

4. Rail temperature sensor cabling must be in 1-1/4 inch GRS conduit.

2.03 MANUFACTURED PRODUCTS

A. Model: Ansaldo, Style M-23E or M-3E; Alstom, Model GM4000A; or approved equal.

B. Identification Letter-Numbers and Switch Point Position Letters: 3 inches high minimum, made of malleable cast metal, painted white or embossed or engraved on a metal plate.

PART 3 - EXECUTION

3.01 ERECTION/ INSTALLATION/ APPLICATION/ CONSTRUCTION

A. Power Switch-and-Lock Movement layouts must for each interlocked track switch and movable point frog at mainline locations must be installed as shown on Contract Drawings:

1. Mount and adjust complete power switch-and-lock movement layout:

a. In direct fixation locations two concrete pads must be cast in place for mounting each switch machine.

b. Ballast locations:

1) Switch headblock ties (T1 and T2) must be at right angles to the straight stock rail, in accordance with the approved installation drawing.

2) condition the switch points to move without binding.

3) Install the tie straps, as indicated on the Contract Drawings and in accordance with the approved installation drawing.

4) Concrete switch ties must not be modified in the field. If modification is essential at ballasted locations, remove existing, furnish, and install new concrete ties with the correct dap or mounting hardware.

2. Verify that track switch layout is in accordance with dimensions indicated on Contract Drawings and as shown on approved installation drawings, prior to commencement of installation Work.

3. Terminate wiring for heaters on mechanism terminal board.

4. Provide an internal wiring diagram protected by a plastic laminate and fasten it to underside of contact compartment cover.

5. Number wire terminal binding posts using stencils or other approved devices.

6. Rods and Hardware: A properly installed switch machine must have a minimum of 1.5 inches of adjustment left for each direction.

7. Lubrication:

a. Lubricate switch tie plates at lubricating points.

b. Ensure that machined surfaces susceptible to rusting, both external and internal, and threaded portions of switch rods and nuts are thoroughly coated with NO-OX-IDE grease that must resist weather and rusting for at least 60 months.

c. Periodically renew protective coating in accordance with Contractor's Maintenance Plan, until such time as Sound Transit assumes responsibility for maintenance of equipment.

B. Cables:

1. Dress underground cables terminating in switch junction box as specified in Section 34 42 08 - External Signal Cable.

2. Fan, tag, and terminate individual conductors. Tag nomenclature must match function names and terminations per the signal control housing circuit plans.

3. Provide junction box wiring between switch junction box and power switch-and-lock movement.

4. Install cables in an appropriate length of approved conduit.

C. Identification:

1. Provide number plates, affixed with rivets, for switch-and-lock movements.

2. Letter switch machines with a number and "A", "B", "C", etc. as indicated on Contract Drawings. Securely fasten with rivets identification letter centered on mechanism cover.

3. Provide, for each layout, letters "N" and "R" and mounting hardware for the type of tie or plinth for purpose of identifying position of switch points.

4. Place "N" on normally closed point sides as shown on Contract Drawings.

5. Drill four holes in concrete plinths or ties to receive fasteners suitable for securing letters.

D. Security:

1. Ensure padlocks can be installed in the following locations:

a. A signal padlock to restrict entry to inside of power switch-and-lock movement.

b. A signal padlock to restrict entry to inside of motor compartment.

c. A signal padlock to restrict entry to inside of contact compartment.

d. A signal padlock to restrict entry to inside of hand crank selector lever, where applicable.

e. Switch padlocks to secure selector lever and hand crank lever.

2. Padlocks:

a. Must be keyed alike.

b. Must be bi-lock type.

c. Must use bi-lock key.

E. Provide Switch Heater Elements and Control Cabinets at the locations as shown on the Contract Drawings.

1. Switch Heater Infrastructure:

a. One Control Cabinet per interlocking.

b. Control Cabinet foundation.

1) Provide Control Cabinet foundations in ballasted track.

2) Provide Control Cabinets foundations in DF track.

3) Must install a control device junction box, for housing the rail temperature sensor, at each switch machine.

F. Paint equipment described in this Section in accordance with instructions in AREMA, Part 1.5.10.

END OF SECTION

SECTION 34 42 13

YARD – TRAILABLE SWITCH OPERATING LAYOUTS

PART 1 - GENERAL

1.01 SUMMARY

A. Section includes:

1. Requirements for the design, furnishing, installation, documentation and testing of trailable switch operating layouts for guarded-point switches. The guarded point housing is located in the “diverging” side of each turnout in the yard whenever possible.

1.02 REFERENCES

A. This Section incorporates by reference the latest revisions of the following documents:

1. AREMA Communications and Signal Manual:

a. 1.5.101

b. 2.1.1

c. 12.2.1

2. FRA:

a. Rule 236.342

1.03 SUBMITTALS

A. Shop Drawings:

1. A complete, dimensioned installation layout drawing for each basic type of single switch and crossover layout must be provided. These drawings must show the exact locations and mounting of all major field components of the switch operating layouts, to include, but not limited to: the switch machine and switch circuit controller and their associated operating rods; tie straps (where required), and; all required and/or necessary junction boxes and interconnecting hose or conduit.

2. Detailed circuit and wiring plans for each type of individual switch layout and crossover layout to be installed in the yard. These plans must include complete control, operation and indication circuits, logic equations and wiring details, to include the special correspondence restoration feature, and must be configured and drawn in the manner specified herein.

3. Installation drawings for the switch snow melting equipment. Include heater type, location, and mounting details as part of drawing submittal.

B. Product Data:

1. Performance data and mechanical and electrical drawings including a bill of material for the switch operating mechanisms which are proposed must be provided.

C. Test Reports and Procedures:

1. A factory test procedure for the approved switch operating mechanisms.

2. Factory test reports of the switch operating mechanisms. These reports must be provided prior to shipment of the mechanisms.

3. A field test procedure in accordance with YTP procedures.

1.04 QUALITY ASSURANCE

A. Switch mechanisms must conform to the recommendations of Part 12.2.1 of the AREMA signal manual, where the recommendations of the AREMA signal manual do not conflict with the requirements specified in this section.

B. Each switch operating mechanism must be factory tested before shipment to the job site. This factory testing must be conducted in accordance with an approved factory test procedure.

C. Each switch operating mechanism and layout must be inspected before and after it has been installed and any deficiencies noted must be corrected at no cost to Sound Transit.

1.05 DELIVERY, STORAGE, AND HANDLING

A. Switch layouts must be properly lubricated during storage.

B. A coating of NO-OX-ID “E” grease, or approved equivalent, must be applied to all unpainted ferrous surfaces before shipping the switch layout equipment from the point of manufacture.

PART 2 - PRODUCTS

2.01 PERFORMANCE REQUIREMENTS

A. Switch Operating Mechanism:

1. The switch operating mechanism must be electrically powered by a 110 volt, direct current motor having the following characteristics:

a. Maximum operating current: 25 Amp.

b. Maximum running current: 5 Amp.

c. Maximum inrush current: 25 Amp.

2. The switch machine motor shall be capable of repeated successful operation, without damage, at voltages between 90 and 130 VDC. The switch machine will be factory tested at voltage higher than 103 VDC to ensure that there is no damage to any components.

3. The switch operating mechanism mustmust be capable of operating the switch points through a full stroke on 80 percent of the nominal voltage within 1.5 seconds.

4. The switch operating mechanism must provide a closing force of at least 1000 punds on the point rails in both their normal and reverse positions.

5. The switch operating mechanism must be trailable by means of slippage of the device used to drive the throw bar, and must not be damaged by trailing moves at speeds up to 15 mph.

6. The switch operating mechanism must operate the switch points fully to the trailed position, with proper force applied to the point rails, in the event a train trails through the switch being controlled.

7. The switch operating mechanism must be convertible to provide either right-hand or left-hand installation or operation.

8. The switch operating mechanism must be adaptable for use with a switch circuit controller.

9. The switch operating mechanism must be equipped with internal heaters of at least 12 watts capacity at the nominal operating voltage.

10. The switch operating mechanisms provided must be suitable for operating No. 5, No. 6 and No. 8 guarded-point switches.

11. The switch operating mechanism must be suitably equipped, or adjustable by means of its throw rod, to provide a switch point throw of 3.5 to 5.25 inches.

12. The height of the switch machine must not exceed 9.75 inches.

13. Each switch machine must be provided with a hand-crank mechanism for operating the switch by hand. The machine must be so designed and constructed that opening the crank mechanism cover or inserting the crank into the hand-crank mechanism must automatically open one or emore contacts in the operating circuit of the machine, thus preventing its energization of the motor. The hand-crank mechanism must be easily operable by a person of average strength and desterity.

14. The switch operating mechanism must be so constructed and circuited that, after its switch has been trailed, it can be brought back into correspondence electrically with the LCP.

15. Threaded parts of the switch operating layouts which require periodic adjustments or maintenance, such as throw rods, detection rods, and mounting bolts, must conform to American standards. American standards must also apply to threaded conduit outlets.

16. All switch operating layouts must have all similar parts interchangeable insofar as possible and practical.

17. Switch Circuit Controller:

    a. The switch circuit controller may be separate piece of equipment equipped with four front and four back dependent contacts to check the position of the switch points. It must be operated by a separate, insulated detector rod attached to a point lug mounted on the switch point nearest to the switch machine and circuit controller housing, whether that switch point is normally open or normally closed.

    b. Switch machines must have method to manually cutout power to the motor at the switch machine.

c. Switch circuit controllers must be in accordance with the recommendations of Part 12.1.1 of the AREMA signal manual. The switch circuit controller, socket, lug, and all necessary lag screws, bolts, nuts and other fastenings must be considered to be part of the switch operating layout.

18. Rods:

a. The switch throw rod and the switch circuit controller rod must both be of the insulated type. Both of these rods must be considered to be part of the switch operating layout.

b. The threaded area supplied on each rod must extend one inch farther in both directions than required for the initial adjustment in order to provide the maximum range of adjustment possible with the approved layout.

c. Any offsets required in switch throw rods or circuit controller rods must be made to the rods during manufacture.

19. All switch operating mechanisms must have a vital timer incorporated within the switch operating circuits. The vital timer must remove energy from the NWR and RWR logic if the detector contacts are opened for more than the time normally required for the switch to move from one position to another due to, for example, an obstruction being encountered. The vital timer must operate in no less than three seconds and no more than five seconds after the point detector contacts open.

20. Switch operating layout equipment must be designed for the use of standard Sound Transit padlocks as follows:

a. A padlock to restrict entry into the switch operating mechanism.

b. A padlock to restrict entry into the switch circuit controller.

c. A padlock to restrict unauthorized use of the hand-crank mechanism.

21. Identification Hardware:

a. Each switch mechanism must bear a number corresponding to the number of the graphical screen equivalent thereof controlling the operation of the turnout. Where two switches are part of a crossover and operated by one auxiliary lever, the number of the switch must be supplemented by the letter “A” or “B” centered directly below the switch number. The letters and numerals must be cast metal or, either embossed or engraved on a plate and fastened to the cover of the mechanism. The letters and numbers must be finished white.

b. Wire and cable termination posts for the switch mechanisms and circuit controllers must be numbered with stencils or other approved devices.

c. Two cast metal letters, “N” and “R” at least three inches high and painted white, must be furnished to denote the normal and reverse positions of the switch points for each switch layout. Each letter must have at least two holes drilled and counter-sunk to receive two and one-half inch, No. 12 brass, flathead wood screws or other appropriate mounting hardware.

B. Switch Heater:

1. Provide rod type heating elements for both the normal and reverse points:

a. 240 Volt with a single ended electrical connection design.

b. 100 watts per foot.

c. Stainless steel construction with a flat side that must be held against the rail by stainless steel clips to maximize thermal transfer to the rail.

2. Crib heating elements, rated for 1,000 W, for the detector, throw, and lock rods.

3. Point heating elements for both the normal and reverse points.

4. Heater Control Cabinet: Provide for each identified interlocking:

a. Steel construction with a NEMA 4 rating.

b. Internal LED lighting.

c. Equipped with internal heater to prevent condensation.

d. Pad lockable door handle

e. Manual ON/OFF/AUTO control switch per location.

5. Provide solid state logic to perform the control function identified herein:

a. Provide ambient temperature and moisture sensors in each yard hemisphere to control the heating elements. Low ambient temperature plus moisture (or moisture bypass) shall energize the heaters throughout that yard hemisphere for a minimum adjustable time of 0 to 3 hours. The sensors must prevent the energizing of the heating elements when the ambient temperature setting (adjustable) is above freezing or there is no precipitation. Indicate the temperature status and moisture status on the LCP separately.

b. Separate on/off control for each turnout at the heater cabinet that overrides the requirement for ambient or LCP status to energize the heater.

c. Logic to stagger the start of the heating elements at a location to only two turnouts of inrush current per cabinet.

d. Logic, temperature sensors, and wiring to turn on the elements of a hemisphere when the ambient temperature is below trigger point (adjustable) plus moisture sensor (or LCP bypass) is present. This will turn on heaters for an adjustable time of 0 to 3 hours. If the ambient conditions still exist at the ened of that time then heater energization must continue. It is permissible, but not essential, that high and low rail ambient temperature are independently adjustable but there must be a minimum of 15 degrees Fahrenheit between the high and low points.

e. Provide an indication on the signal house Local Control Panel (LCP) and to the LCC SCADA interface to indicate ON if any turnout's heating elements are energized.

f. Provide a LCP momentary control to manually turn on the heating elements. When the LCP control request ON it must override the moisture sensing inputs but must not override the ambient temperature sensing feature. When this LCP control is activated the moisture sensing bypass shall keep the heaters activated for an adjustable time of 0 to 3 hours.

2.02 MANUFACTURED PRODUCTS

A. Switch operating mechanisms must be Model 6, DWG. No. 52500-004-18 switch machines as manufactured by ALSTOM Signaling Inc., or SYM-10, as manufactured by Safetran Systems Inc. or approved equal.

B. Each switch operating layout must include, but not limited to, the following:

1. Switch operating mechanism and housing (switch machine) complete with motor, drive mechanism, hand-crank mechanism, internal heating elements and internal wiring diagram.

2. Hand crank.

3. Throw rod (complete with basket mechanism and shim plates).

4. Switch circuit controller.

5. Point detector lug and circuit controller rod of appropriate type and size.

6. Identification hardware.

7. Tie straps (where applicable).

8. All necessary rods, shims, screws, bolts, nuts, washers, pins, grease fittings, cotter keys, adjusting brackets, plates, and miscellaneous hardware to mount the switch mechanism and the switch circuit controller and connect them to the points in the approved manner as specified herein.

9. All the necessary wire, junction boxes and electrical fittings required to connect the switch mechanism and the switch circuit controller electrically to the Yard Control Point for the specified control, operation and indication purposes.

C. Junction Boxes:

1. Each track switch operating layout must include all junction boxes needed for terminating the interconnecting wires and cable from the train control room and/or other switches.

2. Cast iron pedestal-mounted junction boxes must be provided for switch layouts in ballasted track.

D. Electrical Fittings:

1. All necessary connectors, terminal blocks and other electrical fittings required for the switch control, operation and indication wiring as part of each track switch operating layout must be provided.

2.03 FINISHES

A. All equipment described in this section must be painted in accordance with the recommendations in applicable paragraphs of Part 1.5.10 of the AREMA Signal Manual. The finish color must be ANSI 61, unless otherwise specified.

PART 3 - EXECUTION

3.01 INSTALLATION

A. Trailable Switch Operating Layouts:

1. Switch operating layouts must be installed and wired as per drawings prepared by the Contractor.

2. All switch control, operation and indication wiring for each switch and/or crossover as indicated on detailed circuit drawings must be provided. The switch circuit drawings and switch layout drawings must be in conformance with the approved switch operating mechanism provided and must include all features specified herein.

3. Internal wires, as specified in Section 34 42 55 - Internal Signal Cable, must terminate in the switch junction box and also in the switch mechanism in a neat workman like manner. These wires must also be properly tagged and terminated. The wires between the switch junction box and the switch mechanism, or switch circuit controller, must be installed in an appropriate length of flexible hose. The hose must be fastened to the switch junction box, switch circuit controller, and switch mechanism with stainless steel hose clamps.

4. Where the switch circuit controller cover opens into the dynamic outline of the transit cars, a means for the quick and easy removal of the cover for maintenance purposes must be provided.

5. Switch layouts must be properly lubricated and maintained after installation.

6. Each switch mechanism must be supplied with an easily readable internal wiring diagram of a plastic laminated or plastic encased type which must seal out moisture and prevent internal condensation. The wiring diagram must be fastened to the underside of the mechanism cover.

B. Provide Switch Heater Elements and Control Cabinets at the locations as shown on the Contract Drawings. At all other interlocking locations furnish only infrastructure (including power available at a connection point, designated space for the cabinet, and any conduits that must be embedded) so Sound Transit can install Elements, cable connections, and Control Cabinets at future time without rework :

1. Switch Heater Infrastructure:

a. One Control Cabinet for up to eight turnouts, organized to minimize cable runs.

b. Control Cabinet foundation:

1) Provide Control Cabinet foundations in ballasted track.

2) Provide Control Cabinets foundations in DF track.

c. Must install a control device junction box, for housing the rail temperature sensor, at each switch machine.

3.02 ADJUSTMENT

A. The final adjustment must be made by the contractor at the time of the functional test. These adjustments must be made in conformance with FRA Rule 236.342 and the recommendations of Part 12.1.1 of the AREMA Signal Manual.

B. Switch points must be adjusted to fully tuck against the stock rail at the completion of each throw. The No. 1 and No. 2 switch rods must be adjusted to achieve the required adjustment of throw.

C. The initial switch adjustments must result in a switch point throw of 3.75 (+0.25/-0.25) inches fo guarded point switches. The rods, switch mechanism, and point detector must

be adjusted in such a manner that the appropriate point detector contacts must indicate switch closure when a switch point is within 1/8 - inch of its stock rail and no point detector contacts must be closed when both switch points are 1/4 - inch or more from their respective stock rails, with the specified obstruction measurement sbeing made 6 inches back from the switch points.

D. The final adjustment must result in the adjusting nuts, or coupler, being centered on the threads within a tolerance of plus or minus 30 percent of the thread length, and the point opening (throw) being 5.0 inches for non-guarded point switches. This final adjustment must result in a tight point tuck against the stock rail in each switch position.

E. It is the Contractor's responsibility to replace any improper or defective Contractor-furnished parts of the layout at no additional cost, in order to achieve the specified adjustments and test results.

F. The Contractor is responsible for any breakage to the switch layout, including but not limited to broken gear teeth.

END OF SECTION

SECTION 34 42 17

LRV SIGNAL LAYOUTS

PART 1 - GENERAL

1.01 SUMMARY

A. Section includes:

1. Requirements for the procurement and installation of LED-style bar and bumping post signal layouts

1.02 REFERENCES

A. This Section incorporates by reference the latest revisions of the following documents:

1. American Railway Engineering and Maintenance-of-Way Association Communications & Signal Manual of Recommended Practices (AREMA):

a. Part 7 – Signals.

b. Part 14 – Signs

1.03 SUBMITTALS

A. Shop Drawings:

1. Must provide complete drawings for each type of layout proposed; including mounting and wiring details, PC board details, LED details, and bill of materials.

B. Product Data:

1. Description and/or catalog cut of proposed signals to be furnished including proven equipment history.

2. Key-numbered parts list and complete material ordering reference numbers for each type of layout.

C. Source Quality Control:

1. Factory Inspection Procedure.

2. Factory Inspection Report.

PART 2 - PRODUCTS

2.01 PERFORMANCE REQUIREMENTS

A. Input Voltage: 80 to 135 Vac, with 100 percent rated illumination.

B. Current Draw: Maximum 0.050 A at 115 V.

C. LED Viewing Angle: 15 degrees.

D. Operating Temperature Range: Minus 40 to plus 85 degrees C.

E. Ensure LEDs are continuously illuminated.

F. Circuit LEDs in series strings of three and then connect strings in parallel.

G. Ensure failure of a single LED results in a maximum loss of 8 percent of light output.

H. Mount LEDs on black FR-4 double-sided circuit board to ensure no phantom indications occur.

I. Alphanumeric Signals:

1. Must be provided for locations where combination of vertical and slanted bar signals cannot provide adequate indications of each possible route. Such as when traversing through two or more facing point switches in a route.

2. Must indicate which route is lined for the train.

3. Designed for a viewing range of 1000 feet.

4. 5 inches in height by 3.5 inches in width.

5. Capable of displaying route information from route and aspect chart.

6. Designed so that failure of individual LEDs or arrays of LEDs must not cause an alpha character to be displayed such that it could be interpreted as one of the other three characters

2.02 MANUFACTURER

A. Rail Development Group, Hanning & Kahl, or approved equal.

2.03 MATERIALS

A. Light Units: Factory wired signal units with LED lamps:

1. LEDs:

a. Vertical Bars, Slanted Bars, and Alphanumeric: Type InGaN, white in color, with chromaticity coordinates X=.31, Y=.32.

b. Horizontal Bar: Type AlGaInP, amber in color, with chromaticity coordinates X=.57, Y=.41.

c. Bumping Post Signal: Type InGaN, red in color, with chromaticity coordinates X=.72, Y=.28.

2. Bumping Post Signals: 4-inch minimum diameter.

B. Signal Housings:

1. Signal housing must be NEMA 4X for intrusion of moisture and water.

2. Front lens plate must be clear, ¼ inch-thick UV stabilized polycarbonate.

3. Rear cover plate must be Cast aluminum

4. Body must be rugged cast or extruded aluminum.

5. Fasteners must be stainless steel.

2.04 ACCESSORIES

A. Wire (for interconnecting signal junction boxes and LED compartments and other miscellaneous equipment): Minimum single conductor No. 14 stranded wire.

B. Flex Conduit: Liquid-tight flex conduit specified in Section 26 05 33 - Raceway, Boxes, Hangers and Supports for Electrical Systems.

C. Shims: Stainless Steel shims.

D. Signal Number Plates:

1. Characters and Numbers: 2 inches high, round type, white reflectorized on black background.

2. Must meet AREMA Communications and Signals Manual, Part 14.6.1.

3. Nomenclature:

a. Three digit Alpha/Numeric character as shown in the table below.

b. Number and single digit Alpha directional indicator as shown on drawings.

Location	**Three Digit Alpha/Numeric**

2.05 FINISHES

A. Signal Painting:

1. Must have rust-preventive primer coat.

2. Must not use water based paints.

3. Must paint inside of lamp compartment to manufacturer's standard.

4. Must apply one finish coat of paint at point of assembly prior to shipment.

5. Colors/Gloss:

a. Exterior of lamp compartment housing must be semi-gloss black.

b. Signal housings must be semi-gloss black.

c. Mast and Base Casting must not be painted unless required in other contract documents.

2.06 SOURCE QUALITY CONTROL

A. Tests and Inspections:

1. Factory Inspection Procedure.

2. Factory Inspection Report.

PART 3 - EXECUTION

3.01 INSTALLATION

A. Install LED-style Bar and Bumping Post-Signal layouts at locations shown on Contract Drawings:

1. Install layouts in accordance with approved installation drawings.

2. Provide signals with two or three units, as shown on Contract Drawings.

3. Provide a DIN rail mounted circuit breaker in feed to each lighting circuit.

B. Signal Alignment:

1. Align and adjust signals to provide maximum visibility to satisfaction of Resident Engineer.

2. Use stainless steel shims to make signal poles vertical.

3. Ensure that final signal configuration is distinctive when viewed from where an operator would be seated on a train:

a. A height of 7 feet above top of rails.

b. With a minimum sight distance of 600 feet or at maximum line-of-sight in curved track.

c. The TWC Loop Location(s).

C. Install Signal Number Plates for each signal.

1. Place signal number plate under lowest signal unit in layout and fasten by four brass screws.

D. Interconnect signal junction boxes and LED compartments and other miscellaneous equipment with single conductor stranded wire.

E. All wires and cables must be identified with approved wire tags as specified in Section 34 42 55 - Internal Signal Cable, Article 2.03 Identification, Para C Wire Tags and D Cable Tags, and Article 3.01 – Installation.

F. After installation and prior to Contract completion and acceptance, field-apply a final coat of paint of same quality and texture as manufacturer's finish coat to exterior of each layout.

G. SIGNAL MOUNTING

1. Pole Mounting:

a. Install conduits to connect signal head to conduit stub-ups via the pole base junction box.

b. Run cable inside pole to signal head.

c. Provide signal foundations, install anchor bolts in direct fixation, mount to SC ductbank, or mount to ST furnished anchor bolts as indicated for the specific signal location in the contract drawings.

d. Install split-base junction box opening away from the direction of normal LRV traffic.

2. Wall Mounting:

a. Install a wall-mounted junction box in vicinity of wall mounted signals.

b. Install anchor bolts sufficiently sized for signal being mounted.

c. Install conduits to connect junction box to signal head and conduit stub-ups provided by others.

d. Install liquid-tight flex conduit in accordance with Section 26 05 33 - Raceway, Boxes, Hangers and Supports for Electrical Systems, for final connection into signal housing.

e. Provide adjustable mounting brackets.

H. SIGNAL GROUNDING

1. Ground wayside LRV signals with green insulation 4/0 wire indicated.

2. At tunnel or elevated signal location provide pigtails to bond the signals to the grounding system with exothermic welds or compression connections.

3. Furnish and install ground rods at ballasted signal locations indicated in the installation drawings.

4. Ground Resistance: Maximum 15 Ohms.

5. Make a ground rod connection four inches above grade to facilitate maintenance inspection.

END OF SECTION

SECTION 34 42 18

AUDIO FREQUENCY TRACK CIRCUITS

PART 1 - GENERAL

1.01 SUMMARY

A. Section includes:

1. Requirements for the design, procurement, and installation of audio frequency track circuits (AFTC).

1.02 REFERENCES

A. This Section incorporates by reference the latest revisions of the following documents:

1. American Railway Engineering and Maintenance-of-Way Association (AREMA):

a. C&S Part 8 - Communications and Signal Manual, Track Circuits

1.03 SUBMITTALS

A. Product Data: Description and/or catalog cut of proposed audio frequency track circuit to be furnished including proven equipment history.

B. Preliminary Design of Track Circuit:

1. Include track detection frequencies, speed command frequency tolerance, modulation rates and tolerances, description of operation, preliminary block diagrams, power output, shunting sensitivity, methods to provide speed commands in a typical interlocking, and to detect insulated joint failure.

2. Include data on associated equipment that Contractor proposes to use such as loop drivers, couplers, or modules for direct speed command injection into single-rail track circuits.

3. Provide data on resistance to EMI. Approval of EMC Control Plan submittal must be a prerequisite for approval of this submittal.

C. Track circuit calculations in accordance with Section 34 42 19 - Power Frequency Track Circuits.

D. Impedance Bond Installation Drawing:

1. Submit typical impedance bond installation layouts, minimum 180 Days prior to installation.

2. Include a typical impedance bond installation for each type of track fixation area.

3. Provide details of methods for installation of an impedance bond insulated joints, negative traction power return locations, and crossbonds.

4. Provide shop drawings showing details of protective ramps (covers).

5. Provide installation drawings on audio track circuit connections not involving impedance bonds such as terminating receiver location or direct injection speed command connections, including cable routing.

E. Speed Command Loops: Submit installation drawings of speed command loop installations, at least 180 Days prior to installation. Include hardware details, flexible conduit, wire size, routing at frogs and switch point areas, cross-section of installation, and data on components.

F. Field test and inspection procedures and reports.

G. Safety Related Application Condition (SRAC) Certification.

1. The contractor must provide confirmation from the contractor's application engineer that all SRACs from the manufacturer of SVP and track circuits have been met. The application engineer must provide a certification letter and evidence documenting that the component applications and programming meet the OEM's SRACS for the SVP and track circuits, and that the configuration of the inputs and outputs that drive the processor and the system meet the same OEM's SRACS.

2. The SRAC documentation must include a table with the following columns:

a. Identification number for each SRAC.

b. Brief description of the SRAC.

c. Statement on how the design fulfills the criteria within each SRAC.

3. Include with the SRAC documentation the OEM's application requirements for all equipment used for the SVP and track circuits.

PART 2 - PRODUCTS

2.01 PERFORMANCE REQUIREMENTS

A. Design and provide equipment necessary to complete a functioning audio frequency track circuit train detection and cab signaling system.

B. Provide wayside AF track circuits compatible with existing LRV cab decoding. Sound Transit must arrange a test track in the Yard or other location where Contractor can demonstrate compatibility to Sound Transit.

C. Design and provide additional bonding cables for traction power or additional coupling equipment.

D. Main Line Track: Design and provide jointless, audio frequency track circuits as shown on the approved block design. Provide back-to-back impedance bonds where insulated joints are shown on design drawings.

E. Special Trackwork: Provide audio frequency track circuits as shown on the approved interlocking design. Provide cab signals through alternative means such as direct injection or cab loops when power frequency track circuits and overrun protection require.

F. Loss of Shunt Timers:

1. Provide all track circuits within an interlocking, bound by entrance and exit signals, with a 5 second loss of shunt timer to hold the route stick and detector locking.

2. Provide all mainline track circuits between interlockings with a 2 second loss of shunt timer for use in vital functions such as route locking, grade crossing calls, cab signal speed logic, and others.

3. Provide a 5 second loss of shunt timer for use in traffic direction locking.

G. Design Requirements:

1. Standards: In accordance with AREMA Communication and Signal Manual Sections 8.2 and 8.3.

2. Fail-Safe Design Requirement: design AFTC to incorporate fail-safe design principles. Ensure no single point failure of electronic components or maladjustments of user settings causes an unsafe condition.

3. Design track circuits compatible with traction power negative return. Track circuit operation must not be affected by traction power return current imbalances.

4. Design track circuits not to be affected by LRV propulsion, traction systems or other parts of signal system.

5. Automatically restore track circuits to normal operation upon restoration of power after a power failure.

6. Design system to implement slow pick-up track repeater relays or their logic equivalents for track circuits.

7. Do not use track relay contacts in circuits affecting safety; use track repeater relay contacts in those cases.

8. Temperature Range: minus 40 degrees F to plus 160 degrees F.

H. Modular Design:

1. Each combination of track circuit modules must stand alone, except for power supply(s) and logic.

2. Modular Replacement: design track circuits using a modular concept. Design track circuits to be maintainable by concepts of replacement and interchangeability in the field at lowest level replacement unit (PC board and relay). Design electronic shop subassemblies to be repairable at component level.

3. LED Indicators: For ease of maintenance, design circuitry to incorporate LED indicators. Indications include, but are not limited to receiver level detector output, code rate output, each amplifier output, and track relay status.

4. Design PCBs with test jacks at track circuit adjustment and normal field maintenance points.

5. Amplifiers breaking into spurious oscillations must not result in an unsafe condition.

2.02 INDIVIDUAL MODULE REQUIREMENTS

A. Components: Individual carrier frequency oscillators, power amplifiers, line-coupling unit, receiver, and relay driver. Do not use carrier oscillators for more than one track circuit.

B. Dual Frequency: Design audio frequency track circuits to apply two modulated signals to the rails using:

1. One frequency for train detection and broken rail detection.

2. A separate 2340 Hz signal for train speed commands.

C. Transmitter:

1. Design output amplifier of track transmitter such that voltage levels of 2340 Hz cab signal and track frequency can be adjusted independently.

2. Power Amplifier: No variable level adjustment, amplifies carrier's power level as necessary to feed track circuit.

3. Transmitter Level Adjustment Acceptable Techniques:

a. Jumper connections on power amplifier plugboard external to printed circuit board on which power amplifier is located. Or

b. Adjust taps on a fixed resistor external to printed circuit boards on which transmitter electronics are located.

4. Transmitter Rail Current Output: 0.25 amp minimum with a 0.2-ohm shunt placed at entering end of track circuit.

D. Receiver Filter:

1. Type: Bandpass filter tuned to carrier frequency of track circuit.

2. Train Detection Carrier Frequency.

a. No more than 3 dB down at plus or minus 2.5 percent.

b. Minimum 20dB down at plus or minus 8 percent.

3. Minimum 60dB down for other train detection frequencies, their harmonic frequencies, and their beat frequencies.

4. Shorting or opening of element or component within the filter must either:

a. Not change pass band, non-ringing, and attenuation characteristics of filter.

b. Attenuate output of filter so that associated track relay must drop or remain down.

5. Adjustable Elements: None.

E. Receiver Amplifier: Adjustable tuning control, receiver sensitivity may be varied to enable setting of track circuit pre-shunt distance.

F. Design receiver section components to prevent an unsafe condition in the event of component failure.

G. Relay Driver: Energizes track relay when a carrier signal is being received, prevents relay from picking up due to self-oscillations of an electronic circuit, includes no adjustments.

H. Direct output from track module to signal vital processor (SVP) may be used in place of a track relay.

I. Audio Frequency Track Circuit Track Relay: DC biased neutral relay.

J. Relay Drop Away Time: Maximum 1.0 second from time of track shunt until back contacts make.

K. Line Coupling Unit: Matches output of power amplifier to line circuit going to impedance bond, permits both transmission to bond and reception from an adjacent track circuit bond, no adjustable elements.

L. Line Circuit Cable: Twisted pair cable, as required by approved design.

2.03 TRAIN DETECTION

A. Design system to detect trains using audio frequency track circuits using train detection frequencies.

B. Track Circuit Receiver: Declares non-occupied condition (energized) only when a carrier signal is being received that is modulated on-off at same rate as track transmitter for that circuit with correct duty cycle and of proper power level.

C. Track circuit receiver must not permit energized condition until at least three complete valid code periods have been detected.

D. Except in areas covered by single-rail track circuits, design of AFTC track circuit must provide broken rail protection.

E. Train Detection Frequencies:

1. Characteristic: Modulated at a constant code rate(s), distinct from speed command code rates.

2. Amount: Minimum of eight discrete frequencies, minimum of four applied to a specific track.

3. Multiple Track Territory: Use a unique grouping of four frequencies for each track.

4. Minimum Separation: Use three frequencies before repeating initial frequency.

5. Provide maximum physical separation between track circuits using the same frequencies.

6. Select track circuit detection frequencies and modulation rates that avoid EMI problems.

7. Overrun Protection: In the event that a train overruns a stop signal, it must not receive a permissive cab code that was intended for another train. Arrange track circuits and cab loops to ensure overrun protection and detection.

F. Shunting Requirements:

1. Shunt Resistance: 0.2 ohm must indicate train occupancy.

2. Defective insulated joints must indicate train occupancy.

3. Document post shunt. RE approval is required to confirm design headway and operation is not impacted by post shunt greater than 35 feet.

4. Ensure track circuits detect a train approaching a block boundary when front most axel is between 9 feet and 35 feet before block boundary at those locations where block boundary is not defined by insulated joints.

2.04 SPEED COMMANDS

A. Design cab signal module to apply a modulated code rates when vital logic external to the module determines that minimum safety requirements for transmitting a speed command are satisfied.

B. Design system to transmit cab codes to trains running in either normal or reverse direction. Design system such that cab signal is applied to the rail a maximum of one track circuit in advance of approaching train.

C. Design system to pre-energize cab codes in loops prior to the arrival of a train when the section of track that the loop is transmitting cab codes within is preceded by insulated joints.

D. Cab Signal Carrier Frequency: 2340 Hz plus or minus 11 Hz.

E. Signal Strength: Design cab signal strength to provide reliable operation when a 0.20 ohm shunt is applied anywhere in the track circuit. Generate calculations based on approved block design. Nominal cab rate at entering end must be 250 milliamps.

F. Modulation Rates: Design cab signal module to provide modulated code rates as shown in Table 1.

G. Duty Cycle Tolerance: +/-1 percent:

1. (VP): at the vital processor driving the cab frequency generator.

2. (IB): measured in the rails, induced by the Impedance Bond.

TABLE 1

Speed Command	Frequency (Hz)	Period (ms)	Duty Cycle (VP)	Duty Cycle (IB)	Tolerance (ms)
Street Running – 25mph	4.17	240	50 percent	35-65 percent	plus or minus 1
Street Running – 35mph	6.25	160	50 percent	35-65 percent	plus or minus 1
0 MPH	No Code				
10 MPH	6.94	144	50 percent	35-65 percent	plus or minus 1
20 MPH	7.81	128	50 percent	35-65 percent	plus or minus 1
30 MPH	8.93	112	50 percent	35-65 percent	plus or minus 1
35 MPH	10.42	96	50 percent	35-65 percent	plus or minus 1
40 MPH	12.5	80	50 percent	35-65 percent	plus or minus 1
45 MPH	15.63	64	50 percent	35-65 percent	plus or minus 1
55 MPH	20.83	48	50 percent	35-65 percent	plus or minus 1

H. Code Rate Selection:

1. Design code rate selection logic using either vital relay or solid-state logic to select correct modulation rate in accordance with approved control line design.

2. Failures of equipment, within logic or associated track circuit modules, must cause system to revert to either a safer modulation rate or to transmit no speed code.

3. Design system to allow temporary adjustment to speed command lower than maximum allowed by its governing control line via a speed command selection panel.

4. Ensure speed commands shown on Contractor's control line design drawings are maximum that can be selected.

2.05 SPEED COMMAND LOOPS

A. Wire loops of #8 AWG, minimum wire size clipped to the rail, rail fasteners, or adjacent ties as provides the best signal to the LRV receiver coils.

B. Transmitters:

1. Speed command transmitter and transformer: Capable of providing signal strength of greater than 600 milliamps minimum in a wire loop. Initial setting must be 600 milliamps for all cab loops.

2. Provide ability to perform adjustments in module and transformer.

2.06 INTERLOCKING TRACK CIRCUITS

A. Track circuits within interlockings are either single or double rail, as shown on Contract Drawings.

B. Provide both straight and crossover portions of interlocking with train detection and bi-directional speed commands.

C. Interlocking track circuit design must satisfy the following requirements:

1. Rail connections of track circuit equipment as well as bonding, loops, balance rails, and by-pass cables must provide for the smallest possible dead areas where carborne coils cannot receive speed commands.

2. Speed commands supplied by a bond, or loop for a specific route, must not be detectable in track circuits outside the interlocking or on a parallel route.

3. Design layout to provide maximum possible broken rail protection consistent with other requirements.

4. If a train passes a signal displaying a stop aspect, no cab signal must be present in circuit track immediately beyond signal.

D. Insulated Joint Failure Detection: Shorting of an insulated joint must cause one or more track circuits, defined by the joint, to indicate occupancy. Insulated joint failure detection must not be diminished by special trackwork bonding, negative return connections, or crossbonding.

E. Traction Power Return: Design interlocking and equipment to permit traction power to return through interlocking area and provide at least one negative return rail throughout the interlocking. Ensure current imbalances caused by trains do not disrupt system operation.

F. Insulated Joint Location: Insulated joints location must be coordinated with Track and installed per contract drawings.

2.07 IMPEDANCE BONDS – AUDIO FREQUENCY TRACK CIRCUITS

A. Standards: In accordance with AREMA Communication and Signal Manual Sections 8.4.5, 8.4.6, 8.4.8, and 8.4.9.

B. Design impedance bond installations to perform the following functions:

1. Couple train detection and speed limit signals to running rails.

2. Receive train detection signals from running rails.

3. Carry propulsion return current from running rails to track crossbonding connections, cables, or substation return, via center tap connections.

4. Carry propulsion return current around insulated joints in running rails, via center-tap connections.

5. Provide connections to allow for cross bonding as shown on Contract Drawings.

C. Electrical Characteristics.

1. Design impedance bond track winding, and associated cabling and connections, to carry a minimum of 2,000 A per rail continuously.

2. Traction Current Imbalance: Operates with minimum 12 percent.

3. Ripple Current Imbalance: Operates with minimum 30 percent.

4. Dc Resistance Between Track Winding Terminal Lugs: Maximum 2.5x10-5 ohm.

D. Cable Connections.

1. Track Winding Lug: Accept two 250 kcmil cables.

2. Track Connection Cable: 250 kcmil insulated, stranded copper cable, 30 feet maximum length.

3. Side lead cables to be of equal length plus or minus one foot.

E. Center Tap.

1. Center Tap Lug: Accept up to four 500 kcmil cables.

2. Capable of terminating cross-bonding cables, a neutral cable to another impedance bond on same track at insulated joints, and terminating dc negative returns.

3. Sufficient size to accommodate terminations required, and for maximum current that may be encountered.

F. Size impedance bonds, tuning units, and protective ramps to facilitate mounting between running rails.

G. Protective Ramps: Provide 1/4 - inch steel plate, designed to protect bond and tuning unit from physical damage for all impedance bonds mounted between the rails.

2.08 TRACK CIRCUIT CALCULATIONS

A. Prepare calculations for adjusting each track circuit including, but not limited to, power and sensitivity settings, and cab signal strength similar to those provided for power frequency track circuits.

B. Forms with these calculations and for recording these adjustments in the field must be prepared by Contractor and submitted to Sound Transit for approval.

C. Calculations must include operating margins to accommodate EMI.

D. Track circuits must be adjusted in accordance with appropriate calculations and readings recorded on the appropriate form.

E. Track circuit calculations must assume a power line voltage regulation of plus or minus 10 percent.

F. Calculations must assume a normal ballast resistance variation of between 5 Ohms per 1,000 feet (1.5 Ohm/1,000 feet in paved track) and an infinite ballast resistance.

G. Use these calculations to check locations of cross bonds.

2.09 AUDIO FREQUENCY OVERLAY TRACK CIRCUITS

A. Overlay track circuits must be designed to work with 100 Hz Power Frequency Track Circuits and with dc Tractive Electrification.

B. Provide modulated audio frequency overlay track circuits with at least one vital output capable of driving a signal relay.

C. Provide overlay track circuits that do not require additional insulated joints to operate.

D. Provide all required tuned coupling units to create low impedance for the track circuit frequency and high impedance for all other frequencies at or near the track connection.

E. Connect the overlay track circuit directly to the rails with a minimum of No. 6 AWG super flex cable with an approved bolted connection.

F. Rotate the frequency and modulation so that no overlay track circuit adversely affects any other overlay track circuit.

PART 3 - EXECUTION

3.01 INSTALLATION

A. Rack Mounting:

1. Mount track modules on 19-inch racks with sufficient spacing to permit easy removal and adequate cooling, without forced air cooling.

2. Ground chassis of each track module to rack with a separate wire.

B. Impedance Bonds:

1. Provide one line circuit cable to each impedance bond. Provide a tuning unit with each track circuit bond location.

2. Location:

a. Provide at locations shown on Contract Drawings.

b. Mount impedance bonds between the rails wherever possible.

c. Provide protective ramps (covers) to be installed on top of bonds.

d. Do not install impedance bonds where they interfere with cleaning of drains or the use of crosswalks.

e. Where adjustment of impedance bond location would create or increase a speed command dead space, notify Sound Transit.

f. If impedance bonds cannot be located between the rails, they may be installed on the wayside upon approval of Sound Transit.

3. Mounting:

a. Mount impedance bond and its associated protective cover a minimum of 1/2 - inch below top of rail. Mount impedance bond a minimum of 1/2 - inch above invert.

b. Anchor bolts:

1) Must be made by HILTI Corporation or approved equal.

2) Must be stainless steel.

3) Must be heavy duty expansion anchor or epoxy type.

4) Must be 3/8 - inch minimum diameter, length must meet seismic requirements.

4. Impedance bond rail connections:

a. Provide one center tap terminal lug on each impedance bond.

b. Provide two track connection terminal lugs on each impedance bond.

c. Provide two track connection cables from impedance bond to each rail.

d. All impedance bond hardware must match manufacturer's torque specifications.

e. Connections the track must be Cembre, ERICO, or similar bolted connection. See section 34 42 30 - Signals Rail Bonding for detail on how to make connections to the rail.

5. Provide watertight connectors for external connections to tuning unit and connections to impedance bond.

6. Tuning Unit:

a. Tune units must match output of amplifiers to line circuit to compensate for cable lengths.

b. Locate tuning unit at bond or with track circuit module.

c. Tune unit for high impedance for cab signal and track frequencies transmitted or received from this bond. Reduce rail-to-rail impedance for other frequencies sufficient to ensure system safety.

d. Rail-to-rail high impedance requirement does not apply for track circuit boundaries defined by equipment other than bonds, such as B points (high definition loops), or special tuning required in accordance with Contractor's approved interlocking layout. Design system to provide an equivalent level of safety at these locations.

3.02 SPEED COMMAND LOOPS

A. Install and fasten wire loops so that wire is not damaged by fastener and is able to produce a proper signal for carborne cab signal units.

B. Transpositions: Make transpositions of loop from one rail to the other as necessary to keep a signal from being induced in the rail. Provide documentation and calculations supporting transposition requirements.

C. Routing: Fasten loop wire to rail with rail clips or clamp conduit to invert or plinths. Provide non-metallic supports over gaps or drains, where necessary, such that tripping hazard and potential damage to cable is reduced or eliminated.

3.03 AUDIO FREQUENCY OVERLAY TRACK CIRCUITS

A. Location:

1. Provide at the locations shown on the Contract Drawings.

2. Install tuned coupler units in the impedance bond cover enclosures, track boxes, hand holes, or provide OCS pole mounted enclosures.

3. Provide overlay track circuit modules in the closest signal or crossing house to the overlay track circuit connection point.

END OF SECTION

SECTION 34 42 19

POWER FREQUENCY TRACK CIRCUITS

PART 1 – GENERAL

1.01 SUMMARY

A. Section includes:

1. Requirements for the design, procurement, installation, and testing of power frequency track circuits.

1.02 REFERENCES

A. This Section incorporates by reference the latest revisions of the following documents:

1. American Railway Engineering and Maintenance-of-Way Association Communications & Signal Manual of recommended Practices (AREMA):

a. Part 8 - Track Circuits.

b. Part 11 - Circuit Protection.

c. Part 14.2 - Electrical Devices.

2. National Electrical Manufacturers Association (NEMA):

a. NEMA ST20 - Dry Type Transformers for General Applications.

3. Sound Transit Design Technology Manual:

a. Section 12 – Record Drawings

1.03 SUBMITTALS

A. Product Data: Description and catalog cut of proposed track circuits including transformer to be furnished including:

1. Proven equipment history of 5 years successful service in North America.

2. Circuit drawing and description identifying that performance requirements have been met.

3. Parts list.

4. Component drawings and data.

B. Track Circuit Calculations.

C. Power Frequency Track Circuit Installation Drawings: Identify materials and methods to be used for installation. Submit product data, such as catalog cuts and installation procedures, as required to fully describe each element of installation.

D. Safety Related Application Condition (SRAC) Certification:

1. The Contractor must provide confirmation from the contractor's application engineer that all SRACs from the manufacturer of track circuits have been met. The application engineer must provide a certification letter and evidence documenting that the component applications and programming meet the OEM's SRACs for track circuits, and that the configuration of the inputs and outputs that drive the processor and the system meet the same OEM's SRACs.

2. The SRAC documentation must include a table with the following columns:

a. Identification number for each SRAC.

b. Brief description of the SRAC.

c. Statement on how the design fulfills the criteria within each SRAC.

3. Include with the SRAC documentation the OEM's application requirements for all equipment used for the SVP and track circuits.

E. Drawings submitted must follow Design Technology Manual standards.

PART 2 - PRODUCTS

2.01 PERFORMANCE REQUIREMENT

A. Design Requirements:

1. Failsafe Design Requirement: Use fail-safe design principles in design of track circuit components. Failure of component or maladjustment of track circuit must not cause an unsafe condition.

2. A shunt of 0.2 ohm between rails at any location within a track circuit must cause that track circuit to indicate LRV occupancy.

3. Design track circuits and track circuit arrangement to be compatible with traction power negative return. Track circuit operation must not to be affected by traction power return current imbalances.

4. Restoration of power after a power failure must automatically restore track circuits to normal operation.

5. Reset of de-energized track circuits must not be based on adjacent track circuit occupancy.

6. No center-fed power frequency track circuits allowed.

7. Design power frequency track circuits such that no components are shared except for primary of transformer.

8. Design system with adjustable resistors to allow shunting sensitivity adjustment in conjunction with transformer taps.

9. Functional Temperature Range: Minus 40 degrees F to plus 160 degrees F.

10. Track Circuit Configuration:

a. Single-rail in special trackwork.

b. Double-rail if required by the Contract Documents.

11. Standard: AREMA Communication and Signals Manual, Parts 8.1.1, 8.1.20, 8.1.33, 8.1.34, and 8.4.1.

12. Track Circuit Frequency: 100 Hz.

B. Transformers:

1. Transformer Power Frequency: 100 Hz.

2. Standard: In accordance with AREMA Communication and Signals Manual, Part 14.2.10.

3. Audible Noise: NEMA ST20.

4. Feeder Voltage Range: 100V to 125V.

5. Load Rating: 150 percent of maximum calculated load.

6. Primary Winding: 120 V with a 13 percent tap to compensate for reduced voltage.

7. Design number and voltage of secondary windings compatible with application needs.

8. Design voltage taps that provide for suitable track circuit adjustment.

9. Mounting: Suitable for rack mounting.

10. Include balancing impedance or blocking transformer for each single-rail track circuit, to minimize effects of DC propulsion current on track circuit.

2.02 ELECTRICAL CONNECTIONS

A. Fuses:

1. Design single-rail track circuit connections (track feeds and track relays) with protective fuses:

a. Fuse on Relay End: 10 A.

b. Fuse on Transformer End: 20 A.

2. Design double-rail track circuit connections (track feeds and track relays) with fuses:

a. Fuse on Relay End: 6A.

b. Fuse on Transformer End: 20A.

B. Lightning Protection: In accordance with AREMA Communications and Signals Manual, Part 11.3.1.

C. Adjustable Resistors: In accordance with AREMA Communication and Signals Manual, Part 14.2.15.

D. Transformer Electrical Characteristics:

1. Voltage Output: 1V to 15V, in 1V increments.

2. Primary excitation: 120V, 100Hz

3. Volt-Ampere Rating: Sufficient to handle operating load.

4. Susceptibility: Not susceptible to DC saturation by propulsion currents.

2.03 IMPEDANCE BONDS – POWER FREQUENCY TRACK CIRCUITS

A. Impedance bonds must be installed where required and must comply with AREMA Communication and Signals, Part 8.4.5. Impedance bonds must meet the following requirements:

1. Bonds must be rated at 1000 amps DC (minimum) per rail for two hours; rated at 2,000 amps DC, per rail, for one minute (nominal 1,000 amp rating).

2. Rail connections must be stranded copper, two 250 kcmil insulated cables and arranged for independent Cembre or similar bolting to rail of each cable. Two cables per rail on each side of each insulated joint must be installed. The cable insulation must not be within 12 inches of rail welds. Connections must be centered within +/- 1/2 - inch of the neutral axis of the rail.

3. Center-tap connections from each TES substation to the impedance bond must be capable of accepting four 500 kcmil cable lugs with bolted connections. Quantities of 500 kcmil cables installed connecting to the center tap must be as specified for audio frequency impedance bonds. Impedance bond connections to the rail must be capable of accepting two 500 kcmil cable lugs with bolted connections at each end of the bond.

4. Bond windings and magnetic circuit must be encapsulated to be watertight and covered on all four sides by a wrap-around cover. Covers must be malleable iron.

5. Bonds must be supplied, complete with cooling medium, ready for installation.

6. Cooling medium must be in compliance with AREMA Communication and Signals Manual, Part 8.4.6.

7. Impedance bonds must be designed for use with 100 Hz track circuit frequencies. Tuned bonds must not be used.

8. In areas where concrete cross ties are used and an impedance bond is required, mount bonds to concrete ties, using brackets and metal straps such that no drilling of ties is required, or mount outside the rails adjacent to the track.

2.04 RELAYS

A. Type: Vital two-element, phase-selective, plug-in, vane relays suitable for operation on 100 Hz track circuits.

B. Local Element Voltage: 120 V nominal.

C. See Section 34 42 58 - Relays, for additional requirements.

2.05 TRACK CIRCUIT CALCULATIONS.

A. Calculate settings for each track circuit, including feed voltages, transformer tap settings, and resistor settings demonstrating that the 0.2 ohm shunting requirement is satisfied. .

B. Prepare forms with these calculations and for recording these adjustments in the field.

C. Assume a power line voltage regulation of plus or minus 10 percent.

D. Provide equivalent calculations for audio frequency type track circuits.

2.06 EMI MITIGATION

A. Track circuits will be exposed to several sources of electromagnetic interference including, but not limited to, rectified traction power voltage and LRVs themselves which will use AC propulsion equipment.

B. Design system, as installed, to function properly in this environment.

C. Design protection to prevent unsafe conditions and damage to equipment under fault and surge conditions.

PART 3 - EXECUTION

3.01 INSTALLATION

A. Provide power frequency track circuits at special trackwork and street running areas on mainline as shown on IFC Drawings.

B. Install transformers as shown on approved installations drawings.

C. Rack mount the track transformers.

D. Adjust track circuits in accordance with approved calculations, and record readings on approved form.

E. Install impedance bonds in accordance with approved installation drawings.

F. Cable Connections: Connect cabling to the rail with Cembre, ERICO, or similar bolted rail connections or directly to the impedance bond.

G. Cable Size: No. 6 AWG minimum size twisted pair wire. Route cable in conduit.

H. Wire from signal housing and from rail must terminate at a field junction box in the vicinity of the rail connection which must permit rail isolation.

I. Wiring:

1. Provide fuses with a minimum rating as identified in Article 2.01 of this Section in series with wires connecting to the rails for power frequency track circuits.

2. Provide insulated copper, #14 AWG (minimum), for wires and cables in signal equipment rooms.

3. Use twisted pairs for track circuit wires on power frequency track circuits.

4. Dress wire neatly and firmly, attach to plinths, and keep clear of plinth and rail attachment devices when passing beneath a rail.

5. Run wires and cables that attach to rails along the side of plinths just below top surface. Provide rigid or flexible conduit or hose protection clamped to the concrete back to the track connection junction box.

6. For ballast installations track connection cables must be installed in the ballast, and must be installed in conduit to a minimum depth of 1 inch below bottom of tie.

7. Fasten wires and cables that attach to the rails to web of rail using rail clips before coming off rail to plinth or ballast.

END OF SECTION

SECTION 34 42 20

TRAIN-TO-WAYSIDE COMMUNICATIONS SYSTEMS

PART 1 - GENERAL

1.01 SUMMARY

A. Section includes:

1. Requirement for the design and installation of the Train-to-Wayside Communications (TWC) System.

1.02 REFERENCES

A. This Section incorporates by reference the latest revisions of the following documents:

1. Sound Transit Design Technology Manual:

a. Section 12 – Record Drawings

1.03 SUBMITTALS

A. Product Data:

1. Description and/or catalog cut, including proven equipment history of the following:

a. TWC interrogators.

b. Interrogator lead cable.

c. Modified loop converter with filter.

B. Shop Drawings:

1. Each TWC interrogator, showing functions performed by interrogator and model numbers and location of every electronic rack, electronic circuit card, and power supply.

2. Detailed, scaled mechanical layout drawings suitable for manufacturing including parts and material list for loop antennas.

3. TWC installation adjustment procedures.

4. Drawings submitted must follow Design Technology Manual standards.

C. TWC Loops: Detailed, scaled mechanical layout drawings suitable for manufacturing including parts and material list for loop antennas. TWC installation adjustment procedures.

D. Interrogator Masking:

1. Site specific masking for each location at the:

a. As-shipped level.

b. As-built level.

2. All software required to adjust the interrogator masking.

E. Operation and Maintenance Manuals:

1. Show as-installed and tested configuration of each TWC interrogator including TWC output masking as part of the design, as-shipped, and as-built book of plans for each location.

2. Provide copies of any software associated with the interrogator that is used in programming or maintenance.

3. Show model numbers and location of every electronic rack, electronic circuit card, and power supply.

4. Show as-installed location and size of each TWC loop.

5. Provide a description of TWC system and a description of each printed circuit card and electronic module complete with part numbers, theory of operation, and test requirements.

PART 2 - PRODUCTS

2.01 PERFORMANCE REQUIREMENTS

A. Design Requirements:

1. Basic functional requirements for TWC system involves calling routes at interlockings, cancel established routes, establish routes to enter and exit the Yard and activate and/or deactivate near side at-grade crossings. Train operator must not be able to call a route into reverse running traffic direction.

2. Design a Train Control System (TCS) interface in accordance with Section 34 42 65 - Central Control Interface.

3. Design system such that current in each wayside TWC loop generates a Radio Frequency Signal detected by car-carried TWC transponder located at each end of each LRV.

4. Upon receipt of wayside TWC interrogation signal, car-carried transponder must transmit a 19-bit data message back to wayside loop.

5. Information transmitted shall be interfaced to the local microprocessor for functions as described herein.

6. Design wayside TWC equipment to function with carborne TWC equipment currently in use on Sound Transit system.

7. List of TWC Destination Codes must be confirmed with Sound Transit prior to masking interrogators.

8. TWC carborne to wayside data (including car ID) must be captured and reported to SCADA at an accuracy greater than or equal to that of the existing system).

2.02 MATERIALS

A. PRE-FABRICATED TWC LOOPS

1. Fabricate loops in accordance with approved detailed mechanical layout drawing. Additional loop antenna design criteria shown in detail on Issued for Construction (IFC) Drawings.

2. Anchor Bolts: Size and install in accordance with manufacturer's guidelines.

3. Mount TWC loops using anchor bolts or all-thread such that height may be adjusted up to one inch below top of rail and that pre-fabricated loop would provide a steady platform with a 250 pound load placed on it.

B. Embedded TWC loops:

1. One continuous length of wire out and back from loop converter.

2. Loop sealant: Sika Repair SHA, Sika Top 122 Plus, or approved equal.

3. Provide saw cut loops at all locations shown in the IFC Drawings.

2.03 INTERFACING EXISTING CARBORNE EQUIPMENT

A. Manufacturer/Product: TWC System: Phillips VETAG type by Hanning and Kahl, Irwin Industries, or approved equal.

B. LRVs are equipped with TWC transponders at both ends on center line of car body, approximately 5 feet from end of coupler.

C. TWC system uses a wayside interrogator to excite a wayside loop antenna with approximately 0.1 A, at frequencies between 90 kHz and 100 kHz.

D. Transmission from car-carried transponder is between 90 kHz and 100 kHz.

2.04 INTERROGATORS

A. Check received data messages for presence of proper start and stop codes. Validate data messages only after two identical successive data messages have been received. After validation, generate a strobe signal to enable transfer of data to an output buffer.

B. Trains traveling at track speed (the posted speed limit) must be able to transmit four complete data messages per antenna lobe, even in the event that other transponders are over other loops controlled by the same interrogator. Assume zero speed for loops within the platform.

C. Wayside control equipment must query a transponder, and successfully receive and decode data messages from that transponder. Loop antenna must activate and receive data messages from transponders within range. Transmit 19-bit output plus loop identifier bits to TCS equipment in the signal room.

D. Interrogator must provide automatic tuning of wayside loops without the use of passive tuning devices at the loop.

E. Interface circuitry, raceway, and cabling must meet functional requirements. Electronic circuitry, except power supplies must be on removable printed-circuit cards. No more than four loops may be controlled from a single interrogator.

F. Lifespan: Design for a 30-year life in wet and dry applications.

G. TCS Connection: RS232 serial data. In yard system TCS connection must provide raw serial message from LRV to LCC through RS232 serial or ethernet connections.

H. Loop to Interrogator Distance: Provide leads continuous from interrogator terminal strip to loop converter or filter located at the TWC loop. Construct in accordance with manufacturer's recommendations. Include amplifiers, loop converter and junction boxes. Minimum 12 AWG stranded copper conductor.

I. Loop Antenna Receive Frequency: 90 kHz to 100 kHz.

J. Transmission Speed: 2 kbits/s minimum.

K. Circuit Cards:

1. Design data from output buffer to be transmitted to application circuit cards.

2. Design circuit cards with relay contact closure(s) to enable route request Signal Vital Processor (SVP) logic to act upon messages transmitted from the train.

3. Contacts: Rated 0-24 Vdc at 2.0 A.

4. Application Outputs: In accordance with IFC Drawings and described herein.

L. Expandability:

1. TWC equipment must be capable of being expanded to include additional outputs.

2. Each interrogator rack must contain sufficient backplane wiring, power supply capacity, and spare printed-circuit board socket capacity to allow for the following outputs in addition to outputs required for the present system:

a. Buffered parallel output suitable for direct connection to a microcomputer driven electronic passenger information display on the wayside.

b. Buffered relay output to call additional routes.

3. In the event that a 19-inch interrogator rack controls more than one loop antenna, that interrogator rack must contain sufficient capacity to provide additional outputs, described above, for each loop.

2.05 TWC DATA REQUIREMENTS

A. Design wayside TWC equipment to receive and process a 19-bit data message from carborne transponders.

B. Design wayside interrogators to process the following information from LRVs via wayside loop antennas:

1. Active Cab:

a. Train Number (00-99) -- 7 bits.

b. Destination Number (00-99) -- 7 bits.

c. Stationary Pre-empt / CALL button in cab -- 1 bit.

d. Cancel (Route) button in cab -- 1 bit.

e. Switch Call (Left or Right) button in cab -- 2 bits.

f. Active Cab (on for active cab) -- 1 bit.

2. Intermediate (rear-end, inactive) Cabs (for multiple-unit consists only):

a. Car Number (000-999) -- 10 bits.

b. Active Cab (off for intermediate cab) -- 1 bit.

c. End-of-train (off for intermediate cab) -- 1 bit.

d. Spare -- 7 bits.

3. Trailing (rear-end, end-of-train, inactive) cab:

a. Car Number (000-999) -- 10 bits.

b. Active Cab (off for trailing cab) -- 1 bit.

c. End-of-train (on for trailing cab) -- 1 bit.

d. Spare -- 7 bits.

2.06 LOOP CONVERTER

A. Loop converter tuning device.

1. Tune TWC loop automatically or at interrogator with manual selection.

2. Loop converter must not require passive component tuning at TWC loop.

3. Must be modified to include manufacturer's filter component.

4. Loop converter configuration must offer reliable capture of LRV car ID data that is consistent with ST existing equipment. This must be validated by SIT SCADA tests utilizing 4-car consists.

TABLE 1

Data Code Format (Truth Table)

Train/Wayside Communication System

	Transponder Data Bits - Lead Cab																		
	1	2	3	4	5	6	7	8	9	10	11	12	13	14	15	16	17	18	19
Binary Weight		1	2	4	8	16	32	64			1	2	4	8	16	32			64
Lead Cab	LC	D	D	D	D	D	D	D	P	CAN	T	T	T	T	T	T	S	S	T
Logic Level **Right** **Left** **Pre-empt ("Call")** **Cancel**	1	X	X	X	X	X	X	X	1	1	X	X	X	X	X	X	1	1	X

	Transponder Data Bits - Non-Lead Cab																		
	1	2	3	4	5	6	7	8	9	10	11	12	13	14	15	16	17	18	19
Binary Weight		1	2	4	8	16	32	64	AA	BB	CC								
Non-Lead Cab	NL	C	C	C	C	C	C	C	C	C	C	SP	SP	SP	SP	SP	SP	SP	RC
Logic Level Inter-mediate Cab Rear End-of-Train	0	X	X	X	X	X	X	X	X	X	X	X	X	X	X	X	X	X	0 1

LEGEND

AA	=	Binary 128		CAN	=	Cancel
BB	=	Binary 256		D	=	Destination Number (0 through 99) See Table 2 for list of destination codes.
CC	=	Binary 512		S	=	Track Switch Control (Left or Right)
C	=	Car Number (0 through 999)		SP	=	Spare
RC	=	Rear Cab (Signal from Tail Lamps)		T	=	Train Number (00 through 99)
LC	=	Lead Cab (Front End)		X	=	High or Low Logic Level (Left LSB, Right MSB)
NL	=	Non-Lead Cab (Intermediate Cab or Trailing Cab)		1	=	High Logic Level
P	=	Pre-empt or "CALL"		0	=	Low Logic Level

2.07 TWC DESTINATION CODES

TABLE 2

Sound Transit - TWC Destination Codes (to be confirmed prior to final design)

CODE	DESTINATION
00	Turnback Area
01	Storage Track 1
02	Storage Track 2
03	Storage Track 3
04	Storage Track 4
05	Storage Track 5
06	Storage Track 6
07	Storage Track 7
08	Storage Track 8
09	Storage Track 9
10	Storage Track 10
11	Storage Track 11
12	Storage Track 12
13	Storage Track 13
14	Run-Around Track East Side
15	YC Holding Track East Side
16	YA –YC Connection Track
17	YC Holding Track East Side (normal approach)
18	Approach Track to Destination 15
19	Spare
20	Run-Around Track West Side
21	Shop Track 1
22	Shop Track 2
23	Shop Track 3
24	Shop Track 4
25	Shop Track 5
26	Shop Track 6
27	Shop Track 7
28	Shop Track 8
29	Yard Operations, Car Wash; Mainline, WLS SB Platform Turnback
30	YA Track
31	YC Track
32	Pine Street Interlocking
33	Royal Brougham Pocket
34	University of Washington Terminal
35	Northgate Terminal
36	Northgate Pocket
37	Lynwood Terminal
38-39	Spare
40	Rainier Pocket

41	Kirkland NB Tail Track
42	Kirkland SB Tail Track
43	Overlake Terminal
44	Maple Leaf High Rail
45	IDS Pocket
46-63	Spare
64	Airport Pocket
65	Federal Way Transit Center
66	Federal Way Siding
67-95	Spare
96	Henderson Pocket Track
97-99	Spare

PART 3 - EXECUTION

3.01 INTERROGATOR

A. Mount interrogator equipment in racks in signal equipment rooms. Provide inputs to non-vital portion of SVP.

3.02 TWC LOOP INSTALLATION

A. Provide as shown on IFC Drawings. Provide cabling, loop converter, and junction boxes necessary to accomplish the required functions.

B. Install between the rails from 0 to 1.5 inches below top of rail. Connect to TWC interrogator by interrogator lead and loop converter.

END OF SECTION

SECTION 34 42 30

SIGNALS RAIL BONDING

PART 1 - GENERAL

1.01 SUMMARY

A. Section includes:

1. Requirements for the procurement and installation of bonding of main line and special trackwork rails for traction negative return and signal track circuits, cross bonding, and rail connections at locations shown on Issued for Construction Drawings.

1.02 SUBMITTALS

A. Product Data: Description and catalog cut of proposed components and hardware items to be furnished including proven equipment history including the following:

1. Proposed bonds for each size cable to be used identifying part number, wire size, stranding, and terminations.

2. Proposed drill motors and cutting head.

3. Proposed bushings.

4. Proposed process and tool to install bushings.

5. All lugs and other hardware.

B. Test and Evaluation Reports: Rail bonding testing documents.

1. Test Procedures and Test Results for each field test.

2. Certified Test Report for field testing.

PART 2 - PRODUCTS

2.01 MATERIALS

A. Cable:

1. Power Bond Cable: Two 250 kcmil cables, two 500 kcmil cables, extra flexible stranding designed for rail bonding.

2. Audio Frequency Overlay Track Circuit: #6 AWG cable to be used from coupler unit to rail.

B. Bushings, Cable Lugs and Other Hardware:

1. Bushings: Copper bushing capable of being extrude in the hole in the rail web such that the copper material flows into the wall or the hole, compensating for variations in the hole size and filling any voids and uneven surfaces.

2. Cable Lugs: Tin plated copper cable lugs capable of being compression clamped to all proposed cable sizes.

3. Hardware: All bolts, washers, lock nuts, and other hardware required to securely fasten the lug to the rail bushing.

C. Environmental Protection:

1. Corroding Preventive Compound: NO-OX-ID grease or approved equal. Resist weather and rusting for at least 60 months.

2.02 EQUIPMENT

A. Drill Motor, Cutting Heads, and Bushing Press:

1. Cembre, ERICO, or approved equal.

2. Drill Motor and Cutting Heads: Capable of cutting through the rail web without causing damage to the rail.

3. Bushing Press: Capable of extruding a copper bushing into the hole in the web of the rail.

PART 3 - EXECUTION

3.01 INSTALLATION

A. General:

1. Install bonding in accordance with approved procedures, installation drawings, and in accordance with manufacturer's recommendations.

2. Maintain running rail electrical isolation from ground.

B. Rail Connections:

1. Bolt bonds to rail and torque with a calibrated torque wrench per manufacturer’s requirements.

2. Test each bolted connection in accordance with manufacturer’s manual on installation.

3. Inspect all bolted connections for conformance to specifications and manufacturer’s installation manual.

4. Replace defective bolted connections.

5. Stagger at intervals of not less than 4 inches and not greater than 8 inches on centerline.

6. Center bolted connections to web of rail within plus or minus 1/4 inch of neutral axis.

7. Provide sufficient slack to accommodate rail movement due to expansion and contraction.

8. Prep the web of the rail in accordance with manufacturer’s installation procedure.

9. Replacement connections must be relocated, a minimum of 4 inches on centerline, from their original locations.

10. Apply corroding preventive compound to bolts, nuts, uninsulated cable, and other parts susceptible to rusting.

3.02 FIELD QUALITY CONTROL

A. Inspection hold point: Resident Engineer to inspect bolted connections for conformance to these Specifications including location, damage, and the manufacturer's installation manual prior to the loop resistance test specified in Section 34 23 69.

B. Replace bolted connections rejected by Resident Engineer for poor quality as not meeting manufacturer's installation manual and replace with a new bolted connection at Contractor's expense.

END OF SECTION

SECTION 34 42 32

EXISTING SIGNAL SYSTEM MODIFICATIONS

PART 1 - GENERAL

1.01 SUMMARY

A. Section includes:

1. Requirements for the design, procurement of equipment and material, installation, and testing of modifications to the existing signal equipment including the following:

a. Modifications to Signal Vital Processor (SVP) logic.

b. Traffic circuit modifications and of terminal mode operation.

c. Modifications or replacement to the Local Control Panel (LCP), Signal Maintenance Computer (SMC), and Event Recorder.

d. Modifications to the Train Control System (TCS) interface, existing track circuit speed codes, and signal system power.

e. Modifications to interface with new signal equipment for extension.

f. Modifications to existing As-Built Drawings and Software Documents.

g. Perform modifications to existing signal system houses and/or signal rooms as necessary to interface with new Signal House(s) for extension alignment.

1.02 SUBMITTALS

A. Submit:

1. Logic Modification Work Plan:

a. Explain Contractor's proposed methods to perform modifications to existing Signal System.

b. Design approach for maintaining software for existing operation, while testing final configuration. If this includes new SVP or LCP systems, then identify this and describe sharing or switchover of functions between new and existing SVP. Identify programming languages.

c. Describe how Contractor intends to perform design verification of SVP logic and LCP logic for final configuration of all systems controlled from existing control locations prior to installation in the field.

d. Description of Installation Concepts:

1) Include number of new racks, equipment to be added to existing racks, new loads added to existing 12V power supply, installation of new power supply (if required), and equipment staging plan.

e. Include proposed control scheme for configuration control swapping between final configuration mode testing and existing operation mode including logic changes, colored tag wiring, checklists, and abbreviated existing operational checks.

2. Wayside Modification Work Plan:

a. A detailed plan of the process the Contractor will use for removing, disposing, salvaging and adding new wayside equipment as required by the Contract Documents.

3. Design Submittals:

a. Circuit Design:

1) Submit a design and final review book of plans identifying new and modified circuits or details. Include a complete book of plans including those existing drawings having no modification.

b. Software Design:

1) Submit design and final versions of application software.

2) Include requirements for software submittals according to Section 34 42 59 - Signal Vital Processor.

3) Include a complete book of location software.

4) Identify changes to existing logic equations and new logic equations.

5) Identify any intermediate modifications to SVP software between existing and final configuration.

c. Submit method Contractor intends to modify LCP:

1) If it is a new LCP system, then symbols shall match current Sound Transit standards..

2) If modifying the existing LCP program, then symbols shall be identical with existing LCP.

3) For either method, submit a color screen shot or other form of drawing that shows final configuration of each LCP screen.

4) Identify user interface screen control icons.

4. Testing Documents:

a. General: Submit documents in accordance with Section 01 95 00 - System Integration Requirements.

b. Test Program Plan may be combined in overall plan per 34 42 98 - Signal System Testing.

c. Certified Test Reports for factory testing when applicable to the location.

d. Test Procedures and Test Results for each factory test including software simulation demonstrations.

e. Test Procedures and Test Results for each field test.

f. Certified Test Reports for field testing.

5. Special Procedures:

a. Construction Work Plan (CWP): Submit detailed CWPs 30 Days prior to performing any work and any modification to the existing signal system. For CWP requirements see Section 01 45 00.15 - Quality Management Design-Build .

b. Cutover Plan:

1) Submit a cutover plan for modifications to existing signal system.

2) Detail exact procedures and tasks to be completed at final cutover. Provide a schedule that meets time allocated by Sound Transit operations so that no service disruption occurs.

3) Estimate of support required by Sound Transit's Operations group including manpower, hours of work, and craft requirements. This is for Sound Transit staffing projections and does not guarantee Contractor's desired support levels will be supplied.

4) Develop procedures that detail how existing system is deleted and removed. Ensure no unused functions or equipment remains in signal room upon final acceptance after cutover completion.

B. Closeout Submittals:

1. Record Documents: Provide paper copies as well as CD copies of book of plans and cable pulling plans:

a. Record Drawings:

1) Submit final configuration signal book of plans as a complete integrated set of existing and new equipment, not just sheets that have changed.

2) Include an updated set of cable pull drawings of existing and new cable installation.

2. Software: As-built SVP application software. Provide software with descriptive literature as required within this Section and consistent with requirements for software submittals in accordance with Section 34 42 59 - Signal Vital Processor.

3. LCP: Provide all loadable software that can re-create the LCP and restore functions if a maintenance computer must be replaced.

1.03 QUALITY ASSURANCE

A. Ensure field installation and modification procedures used achieve workmanship quality equivalent to a factory installation.

B. Ensure installation process provides for configuration control of existing signal system drawings, software, vital logic configuration files, TWC masking, and documents.

C. Ensure design modifications, test plans, and cutover plans do not interfere with revenue service except as directed by Sound Transit.

PART 2 - PRODUCTS

2.01 OWNER-FURNISHED (OWNER-SUPPLIED) PRODUCTS

A. Existing Products: Sound Transit will furnish the following documentation for Contractor to design existing signal system modifications:

1. CD copy of signal system book of plans in AutoCAD format.

2. SVP application logic equations including a glossary of logic variable abbreviations.

3. Copy of LCP programming data.

2.02 SYSTEM GENERAL REQUIREMENTS

A. Design, furnish, and install additions and modifications to existing signal system and associated wayside signal equipment.

B. Preserve existing equipment and operations unless modifications are specified herein or on Contract Drawings.

C. Do not interfere with existing revenue service operation or maintenance until cutover of final configuration.

D. Existing signal system modifications include, but are not limited to, the following:

1. Provide new signal wayside and room equipment for extension alignment.

2. Eliminate existing Terminal logic.

3. Modify control line logic and speed restriction control.

4. Modify existing equipment to interface with new signal system equipment.

5. Provide final configuration indications and controls between Link Control Center (LCC) and existing signal control locations.

6. Modify or replace LCP to control and display status of both existing and final signal system configurations.

7. Modify event recorder subsystem to record new signal logic variables in addition to existing variables and delete variables no longer in the new final configuration.

E. Book of Plans Modifications:

1. Use identical device graphics, device nomenclature, and wire nomenclature as used in existing plans.

2. Design modifications using a continuation of existing rack layout numbers and MDF arrangement nomenclature.

F. Design wiring modifications to permit quick and reliable cutover from existing operation to final configuration.

2.03 APPLICATION LOGIC MODIFICATION OPTIONS

A. Work Plan shall designate and describe the design and clarify if new vital signal processors will be provided or if the existing will be modified.

B. Reprogram existing SVP:

1. Maintain existing configuration functionality until revenue cutover to final configuration, unless an interim configuration is approved by Sound Transit.

2. Final configuration program shall not have unused residual logic from existing terminal mode configuration or any intermediate configurations.

2.04 TRAFFIC CIRCUIT MODIFICATIONS

A. Provide traffic circuit logic between existing interlocking and next adjacent new interlocking.

B. Route requests into block between two interlockings must request, align, and lock the necessary direction.

C. Maintain traffic circuit direction after LRV proceeds through block. Use additional magnetic stick relays if needed to maintain traffic direction in event of power loss or signal processor re-start.

2.05 MODIFY EXISTING INTERLOCKING TERMINAL MODE OPERATION

A. Terminal Mode Approach Clearing Function:

1. There are three terminal modes plus a Manual Mode selection that control to which stub track a LRV will route when existing signal system is in Auto Mode. For final configuration, modify SVP logic associated with this function, TCS interfaces associated with this function, and LCP software associated with this function.

B. New modes as shown on the modified Route and Aspect Charts will include a through mode, continuing on to the extension alignment.

C. LRV Dispatch:

1. Modify SVP logic, TCS interface, LCP programming, and signal equipment wiring to delete dispatch function from final configuration.

D. Train to Wayside Communications (TWC) Route Requests:

1. The existing interlocking is equipped with TWC wayside loops, TWC equipment, and route request logic for terminal operation. Modify the existing logic per the modified Route and Aspect Charts.

2.06 LCP, SMC, AND EVENT RECORDER MODIFICATIONS

A. Existing SMC Connections:

1. Connections from the existing SMCs to existing SVP connect either through a 12 port serial “hub”,an RS232 splitter, or an ethernet switch.

2. For event log data and diagnostics, the SMC uses one port per SVP, connects through a serial hub with one port per SVP, or connects through an ethernet switch to an event recorder.

3. For LCP functions, the SMC connects through a serial hub to either normal or standby SVP via a transfer relay, or through an LCP network switch.

4. Connections from the existing SMC connect through a hub, through an ethernet switch and serial converter, or via an RS232 cable to TWC interrogator. Connection to be used for interrogator troubleshooting and maintenance.

5. Verify the existing configurations prior to starting design.

6. Expand, modify, or replace the system to achieve equivalent functionality for the final configuration.

B. Existing LCP Display and Control From SMC Includes:

1. Interlocking functions, switches, track circuits, LRV signals outside the interlocking, traffic circuit direction and traffic locked condition, terminal mode status, grade crossing status, communication status to adjacent signal location, and miscellaneous alarm displays.

2. Modify or replace the LCP for the final configuration, at all modified locations.

C. Existing maintenance functions for SVP:

1. SMC main screen contains a direct access to both normal and standby SVP, regardless of which unit is in control.

2. SMC displays real time status of events, provides control to capture event logs at any time, provides emulation controls to the application program, display program history, and performs functions associated with SVP maintenance except altering SVP programming.

3. These functions shall be maintained in the final configuration.

D. Existing SVP Event Recorder:

1. Existing event recorder application on SMC daily (at pre-assigned times) captures status changes of important application logic variables independently from both normal and standby SVP and stores these files in a hard drive directory capable of holding up a minimum of one year of events.

2. Existing recorded variables include track circuits, track circuit repeaters, speed command selection variables, timers, signals status, route request variables, switch calls, switch correspondence, switch lock, alarms, terminal mode and dispatch variables, signal/switch/track blocks, and grade crossing.

3. Modify processor logic and interface to update the recorder variables for the final configuration.

E. Existing SMC Maintenance Library:

1. SMC contains maintenance information for signal system.

2. SMC contains PDF files (searchable) of information listed below:

a. Copy of SVP application logic in drop line form.

b. Copy of signal location book of plans.

c. Copy of SVP system manuals.

d. Copy of switch machine manuals.

e. Copy of track circuit manuals.

f. Copy of maintainer input files concerning equipment adjustments, test records, or miscellaneous information maintainer wishes to enter.

3. Update the SMC Maintenance Library to include all the final configuration documentation.

2.07 TCS INTERFACE MODIFICATION

A. Existing SVP accepts controls and provides indications to TCS for use at LCC computer system in an 8-bit serial GENISYS data format.

B. A copy of existing Control and Indication Charts are included in Contract Drawings.

C. Maintain existing TCS interface configuration during revenue service hours.

D. Identify use of modified software prior to final configuration cutover in Field Test Plan with a detailed explanation of why it does not interfere with operations.

2.08 TRACK CIRCUIT SPEED CODE MODIFICATIONS

A. Existing Speed Code Modifications:

1. Extension and addition of new wayside signals require modifications in accordance with Contract Control Line Drawings to speed codes in existing track circuits. Refer to As-Built Control Lines for existing control line codes.

B. Slow Order Switch Panel Modifications:

1. Modify and add to existing rotary slow order switch panel to provide speed codes for new track circuits and higher speed codes for track circuits where required by new Control Lines. Bond Mylar or aluminum patches with compatible printing panel as part of final configuration.

2.09 SOURCE QUALITY CONTROL

A. Tests and Inspections:

1. Factory Production Tests:

a. Procedure may refer to submittals issued under Section 34 42 98 - Signals System Testing, for typical tests of new signal equipment and SVP logic.

2. Address testing specific to Existing Modifications such as how final configuration software and LCP final configuration software will be tested prior to field installation.

3. Verify test does not interfere with existing configuration operation or maintenance functions.

PART 3 - EXECUTION

3.01 FIELD QUALITY CONTROL

A. Field Installation Tests:

1. Procedure may refer to submittals issued under Section 34 42 98 - Signals System Testing, for typical tests of new signal equipment and SVP logic.

2. Address testing specific to Existing Modifications such as how final configuration software and LCP final configuration software will be tested prior to and after final cutover.

3. Ensure tests do not interfere with existing configuration operation or maintenance functions.

B. Existing Signal System:

1. Maintain the existing signal system per the submitted cutover plan until the signal system is tested and cutover to final configuration.

C. Site Specific Testing Requirements for modified existing locations:

1. Procedure may refer to submittals issued under Section 34 42 98 - Signals System Testing, for typical tests of new signal equipment and SVP logic. If the existing equipment is significantly different that is requires different testing, submit a modified test procedure for the existing equipment.

2. Factory Test:

a. All function of the application logic shall be tested on a simulation device specifically designed to test the logic of multiple locations simultaneously. Final and any intermittent stages shall be simulated.

b. Test the new LCP and updated Data Recorder (if applicable).

c. All new equipment shall receive factory testing that meets the minimum QA/QC standards for that equipment.

3. Field Testing:

a. Perform a complete test of all of the existing field equipment with the new application logic and new equipment installed. This test shall include but not be limited to:

1) Speed command functions.

2) Interlocking functions.

3) Traffic functions.

4) SCADA interface.

5) LCP operation.

6) Data recording.

b. Existing equipment and test procedures exempt from re-testing:

1) Track circuit set-up testing and pre/post shunt testing, unless any component of the track circuit was modified or replaced or an adjacent track circuit not separated by an insulated joint had a change in length, was modified, or a component replaced.

2) Cab signal strength testing, unless any component of the track circuit was modified or replaced or an adjacent track circuit not separated by an insulated joint had a change in length, was modified, or a component replaced.

3) Vital relay testing if the relay has not been removed from the rack or repurposed in the logic.

4) Signal lighting and alignment testing, if there have been no changes to the track or other wayside devices or structures between the signal and the required maximum sight distance from the signal.

5) Switch machine adjustment, overload, latch-out, or switch current, provided there are no modifications to the control or indication circuits.

6) Tag verification and cable testing, provided that nothing has been disturbed in the circuits or no additional cable has been over-pulled into a conduit used by the existing cable.

END OF SECTION

SECTION 34 42 35

SIGNAL POWER DISTRIBUTION SYSTEM

PART 1 - GENERAL

1.01 SUMMARY

A. Section includes:

1. Requirements for the following:

a. Description of power distribution systems for the 3 potential types of signal enclosures.

b. Design, procurement, installation, and testing requirements for Uninterruptible Power Supplies (UPS) and frequency converters.

1.02 REFERENCES

A. This Section incorporates by reference the latest revisions of the following documents:

1. American Railway Engineering and Maintenance-of-Way Association Communications & Signal Manual of Recommended Practices (AREMA):

a. Section 11 – Circuit Protection.

2. American Society for Testing and Materials ASTM International (ASTM):

a. ASTM A283/A283M - Standard Specification for Low and Intermediate Tensile Strength Carbon Steel Plates.

3. American National Standards Institute (ANSI):

a. ANSI C62.41.1 - Guide on the Surge Environment in Low-Voltages (1000V and less) AC Power Circuits.

b. ANSI Z358.1 - Emergency Eyewash and Shower Equipment.

4. Federal Communications Commission (FCC):

a. FCC 47 CFR Part 15 - Radio Frequency Devices.

5. International Code Council (ICC):

a. IBC - International Building Code.

6. National Fire Protection Association (NFPA):

a. NFPA 70 - National Electrical Code (NEC).

b. NFPA 2001 – Standard on Clean Agent Fire Extinguishing Systems.

7. National Electrical Manufacturer's Association (NEMA):

a. NEMA PB-1 – Panelboards.

b. NEMA PE-1 - Uninterruptible Power Systems (UPS)—Specification and Performance Verification.

8. Seattle Mechanical Code.

9. Underwriter's Laboratories (UL):

a. UL 1449 – Surge Protection Devices.

b. UL 1778 - Uninterruptible Power Systems.

10. Washington Industrial Health and Safety Act (WISHA).

1.03 SUBMITTALS

A. Product Data:

1. Description and catalog cuts of proposed components, UPS, batteries, frequency converters and hardware items to be furnished including proven equipment history.

2. Description and catalog cuts for AC power distribution material including, but not limited to, disconnects, panelboards, surge protection, breakers, fuses, and wiring for Sound Transit.

B. Certificates:

1. Certified Factory Test reports for UPS and frequency converters.

C. Design Submittals:

1. Power Calculations:

a. Submit with power system plans for each location.

b. AC and DC power calculations based on total peak and nominal load that will exist at each signal equipment location.

c. Nominal load is defined as load for normal operation at 4-minute headway.

d. Calculations must derive load by showing power consumption of each type of device in the room. Where signal housing has separate panels for non-battery backed loads and panel for battery backed loads calculations must show loads independently and must identify loads for each 120 volt leg.

e. Identify a nominal load for each UPS based on normal direction operations with 4-minute headway each direction.

f. Voltage drop calculations for 240 Vac single-phase power connection to source and AC power distribution wiring within signal room in accordance with criteria specified in Section 34 42 08 - External Signal Cable.

g. Calculations for switch heater system and all system logic necessary to ensure that the total load of the signal house, switch heater and all other loads, does not exceed the allowable load for each location as shown in the Contract documents.

D. UPS Calculations:

1. Calculations showing UPS electrical size can meet peak load.

2. Calculations showing UPS battery capacity.

E. Power System Plans:

1. Submit power system plans for each signal room.

2. Submit power system plans prior to obtaining Electrical Permits.

3. Provide single line drawings showing energy distribution to signal equipment.

4. Provide ratings of protective devices and transformers, including required cable and wire sizes.

5. Show layout of power equipment within signal room and signal house. Comply with NEC and all local code requirements, as interpreted by the Authority having jurisdiction.

1.04 QUALITY ASSURANCE

A. Provide power distribution materials and equipment furnished and installed to meet latest edition of National Electrical Code (NEC) and applicable state and local ordinances.

B. Calculations must be checked, stamped, and signed by a Washington State licensed Professional Engineer.

1.05 DELIVER, STORAGE AND HANDLING

A. Store grounding equipment inside a building prior to installation.

PART 2 - PRODUCTS

2.01 PERFORMANCE REQUIREMENTS

A. ST Signal House Types

1. ST utilizes 3 types of signal equipment houses (factory assembled mainline signal bungalows, civil contractor furnished station rooms, and factory assembled grade crossing control bungalows) as applicable to the location and each has unique power distribution requirements. Additional power system details are contained in Sections 34 42 38 – Wayside Enclosures.

a. Factory Assembled mainline signal bungalows (bungalows containing Track Circuits): The power feed is to a house load panel that directly feeds non-battery backed up loads and provides a feed to a UPS backed up load panel. There must be a transfer switch allowing plug connected emergency generator backup to the UPS. All equipment necessary to maintain normal signal control operation in event of a power loss must be fed from the UPS panel. Where required, the mainline house must also provide feeds (backup power not required) to switch heater enclosures and grade crossing housings.

b. Civil contractor furnished station rooms: These signal rooms have a single UPS fed panel that feeds all signal equipment. Lights, outlets, and other non-signal loads are part of the station power distribution system. There is no emergency generator backup connection for these rooms.

c. Factory assembled grade crossing control bungalows:

1) These housings are to be equipped with one power panel for all loads.

2) They are not to have a UPS or emergency generator connection.

3) Signal equipment is backed up by Ni-CAD batteries.

B. Incoming Power:

1. See the Issued for Construction (IFC) Drawings for the location voltage level of the power drop for each signal location. This will vary based on type of signal location as described below.

a. Mainline, and Highway Crossing House locations will be provided with either:	1) Power pedestal. 2) Breaker in an adjacent ST facility.
b. Signal Rooms in ST facilities:	1) A wall mounted disconnect. 2) Breaker in a power panel in the signal room

2. Provide all conduit and cabling from power drop to signal location.

3. Provide power distribution as shown on the standard drawing for each type of signal location.

4. Provide a step-down transformer at where required to reduce the power drop to the appropriate voltage level.

5. Provide an isolation transformer for all signal equipment.

C. Owner-furnished existing power products/systems:

1. Sound Transit (via civil contract requirements or the design of a prime design- build contractor) will provide a power connection point designated for each signal house location. For crossing housings this may be to sub-feed it from the nearest mainline signal house. The Signal IFC Drawings designate the power connection point location and the power and voltage being furnished. The Contractor must connect transform the voltage if necessary and distribute the power to his signal equipment.

2. For signal rooms that are part of stations, Sound Transit (via a civil contractor or the design of a prime design build contractor) will provide power in signal room via a disconnect switch mounted on wall as shown on IFC Drawings.

3. Provide transformer and design signal equipment ac power to be fed from secondary of an isolation transformer at locations shown on the IFC drawings.

2.02 SIGNAL POWER DISTRIBUTION EQUIPMENT

A. Panelboards and Circuit Breakers: Coordinate with Electrical System Designer.

B. Transformers: Coordinate with Electrical System Designer.

C. Surge Suppression: Type 1, in accordance with UL 1449.

D. 60Hz AC ground fault detector (Signal Room Only).

2.03 UNINTERRUPTIBLE POWER SUPPLY

A. Manufacturer: Eaton Powerware 9155 or approved equal.

B. Design UPS output to handle signal room peak load. Provide a minimum of 10 percent spare capacity for future expansion.

C. Provide UPS equipment from only one manufacturer.

D. Design UPS to power signal equipment including, but not limited to, signal processors, track circuits, cab signals, TWCs, switch machines, and wayside signals. UPS will also power non-signaling related track service utility equipment as shown on typical signal power distribution plan.

E. Standards and Codes: In accordance with UL 1778, ANSI C62.41.1, FCC part 15, Class A, NEMA PE-1, and NFPA-70.

F. Able to operate in environment of signal room. The product must have demonstrated 5 years of successful installation on a North American railroad or transit.

G. Environmental Range: 30 to 113 degrees F; relative humidity of 5 to 95 percent.

H. Output Regulation: Within plus or minus 2 percent over full range of battery voltage.

I. Voltage Output: Sinusoid 60 Hz output within plus or minus 0.5 percent with maximum 5 percent harmonic distortion over full range of input and battery voltage.

J. Input Voltage Range: Plus 10 percent to minus 15 percent.

K. Lagging Power Factor: 0.8 at full load.

L. Provide UPS capable of hot swapping of batteries.

M. Batteries:

N. Nickel-Cadmium or Valve Regulated Lead Acid (VRLA).

O. Battery Capacity: Sustain nominal UPS load plus 25 percent (for future expansion) for a period of 90 minutes.

P. Mount batteries in a complete UPS cabinet designed to house UPS and batteries, or in additional external battery cabinets as necessary.

Q. Design UPS and battery cabinets, including ventilation requirements, to meet requirements of the authority having jurisdiction.

R. Submit certification that UPS equipment and installation is designed to withstand seismic forces in accordance with International Building Code, Seismic Zone 3 requirements.

S. By-pass switch:

1. Type: Mechanical or solid state.

2. Manual Power Source Selection: Via a manual lever or via pushbutton control.

3. Power Interruption: Maximum 1/10 second.

4. Design switch to isolate UPS rectifier from inverter components.

5. Design switch to automatically failover to room AC power source in the event of UPS output failure.

6. Ensure AC power source is available even if there has been a short within UPS.

T. Alarms and Indications:

1. Design of UPS must include meters to indicate, at a minimum, output voltage and inverter current.

2. Design of UPS must include Ethernet connection to Signal Maintenance Computer and via a network to a remote location for display of diagnostic information.

3. Alarms:

a. UPS on Battery Alarm: Indicates rectifier current is zero and load is being drawn solely from battery.

b. Bypass Indication: Indicates UPS on bypass.

c. Summary Trouble Indication: Indicates when trouble alarm is present on UPS.

2.04 FREQUENCY CONVERTER

A. Input Voltage: 120 Vac, 60 Hz service (from UPS panel via a dedicated breaker).

B. Output Power: Single-phase, two wire, isolated output adjustable from 105 to 130 Vac at 100 Hz.

C. Size to continuously furnish a minimum of 125 percent field tested load.

D. Type: Solid state, AC power source, synthesized sine wave.

E. Load Power Factor: 0.8 lead or 0.7 lag at rated output.

F. Efficiency: 70 percent minimum.

G. Voltage Regulation: Plus or minus 1 percent with line fluctuations of plus or minus 10 percent from no load to full load.

H. Frequency Stability: 2 percent maximum.

I. Harmonic Distortion: 4 percent maximum at loads or inputs specified herein.

J. Meters, Panel: Voltmeter, ammeter, and frequency meter with 2 percent minimum accuracy.

K. Protection: Provide input and output circuit protection as indicated on IFC Drawings.

L. Frequency must be stable in stand-alone operation.

M. Design converter with capability of being kept in phase via a phase lock circuit to an external synchronization signal if future operation requires synchronization to an adjacent location.

N. Alarms:

1. Alarm Circuit Output: Via discrete contacts.

2. Connect alarm contacts to non-vital processor for indication to TCS and local control panel, as part of a summary power supply alarm.

3. Alarm Indications: Report as part of a summary power equipment failure alarm.

4. Alarm Indications Include:

a. Overvoltage/undervoltage on output.

b. Phase relation to sync greater than 10 degrees.

c. Loss of synchronization signal.

2.05 CONTRACTOR SUPPLIED GROUNDING

A. Driven ground rods: 5/8 inch x 8 feet – 0 inches.

B. Conductor for ground ring; 4/0 AWG insulated copper wire. .

C. Conductor for connection to corner of signal house: 2 AWG UV resistant green insulated stranded copper.

D. Conductor for mainline signal house test ground connection to rod independent of ground ring use 2 AWG UV resistant green insulated stranded copper.

E. Conductor for connection to service panel and ground fault detector test ground: 2 AWG bare stranded copper.

F. At tunnel signal rooms and other designated locations use the supplied grounding system to ground the signal equipment. Unless the Contract Documents specifically identify the grounding connection is furnished by ST, the Contractor must be responsible for providing the grounding.

2.06 PORTABLE EYEWASH STATION

A. Portable Eyewash Station: In conformance with ANSI Z358.1 and WISHA.

B. Design eyewash station to mount near any UPS or batteries. Product selection and mounting must be chosen for minimal interference with passage or maintenance activities.

PART 3 - EXECUTION

3.01 INSTALLATION

A. General:

1. Provide a signal power distribution system compatible with signal system.

2. Provide an UPS in all mainline signal houses or rooms that contain track circuits.

3. Provide a 100 Hz frequency converter as source for power frequency track circuits.

4. Provide power conditioning including, but not limited to, surge and noise suppression required on power feeds for rack mounted power supplies and located on power distribution racks.

5. Install in compliance with NFPA 70, Seattle Mechanical Code, Seismic Zone 3 requirements, and Building Code of Authority Having Jurisdiction.

6. Install equipment plumb and level.

7. Mount power equipment on racks when available and alternatively on signal room walls.

8. Provide unobstructed space around equipment for easy maintenance to greatest extent possible.

9. Mount power equipment not on racks using galvanized or stainless steel hardware and screws.

B. AC Power Distribution:

1. Incoming AC Components:

a. Extend conduit from power source disconnect switch to isolation transformer.

b. Provide a main panel board to protect complete room load at each signal room powered by UPS.

c. Provide surge protection for power entrance to room.

2. Separate AC wiring from signal data wiring as much as feasible to avoid potential EMI issues.

3. Provide protection of terminals carrying 50 Vac, or above, from casual contact during maintenance or operation.

4. Provide protection on AAR terminal block posts carrying 120 V used on entrance rack, or as distribution points in equipment racks.

C. Electrical Identification: Provide nameplates on panelboards, transformers, and electrical wiring in accordance with Section 26 05 03 - Electrical Identification and Section 34 42 55 – Internal Signal Cable.

D. Contractor Supplied Grounding:

1. Ground to earth resistance:15 ohms or less.

2. Connect at least 3 corners of all signal houses to grounding system.

3. Connect service panel and ground fault detector test ground with separate conductors.

E. Portable Eyewash Station:

1. Commission eyewash in accordance with governing regulations and manufacturer requirements.

2. Maintain eyewash in accordance with manufacturer's guidelines until Final Acceptance.

F. Reference: ANSI Z358.1 and WISHA.

3.02 SIGNAL ROOM AS PART OF STATION ENCLOSURE INTEGRITY

A. Civil contractor will provide a clean agent fire suppression system in signal rooms furnished in ST facilities. The furnished room will conform to the latest NFPA requirements for enclosure integrity.

B. Modifications to signal room including installation of power distribution equipment, internal cable in conduit, external cable through conduit to the entrance rack, and all other construction activities must preserve room seal in accordance with the latest version of

NFPA Annex C – Enclosure Integrity Procedure. All conduits must be sealed after cable installation and testing.

END OF SECTION

SECTION 34 42 38

WAYSIDE ENCLOSURES

PART 1 - GENERAL

1.01 SUMMARY

A. Section includes:

1. Requirements for furnishing and installing factory wired instrument houses and cases as described herein and as shown in the Contract Drawings.

1.02 REFERENCES

A. This Section incorporates by reference the latest revisions of the following documents:

1. American Railway Engineering and Maintenance-of-Way Association Communications & Signal Manual of Recommended Practices (AREMA):

    1. Part 14.4 – Foundations.

    2. Part 15 – Materials.

2. American Society for Testing and Materials ASTM International (ASTM):

    1. ASTM 84 - Standard Test Method for Surface Burning Characteristics of Building Materials.

3. National Fire Protection Association (NFPA):

    1. NFPA 70 - National Electric Code (NEC).

4. Washington State Labor and Industry Gold Seal Label Process and Requirements (L&I).

5. Washington State Building Code:

    1. Washington Administrative Code (WAC) – Chapter 50-51 WAC International Building Code.

6. Underwriter’s Laboratories (UL):

    1. UL 38 – Standard for Manual Signaling Boxes for Fire Alarm Systems.

    2. UL 521 – Standard for Heat Detectors for Fire Protective Signaling Systems.

    3. UL 1008 - Transfer Switch Equipment.

7. Sound Transit Design Technology Manual:

    1. Section 12 – Record Drawings

1.03 SUBMITTALS

A. Product Data:

1. A listing of each instrument house to be used on the job, along with its location and proposed size shall be submitted to Sound Transit within 90 days of Notice to Proceed (NTP).

2. Description and/or catalog cut of the proposed instrument houses including the proven equipment history.

3. Provide information of materials used to create the structure including electrical components, lighting, cable trays, insulation, and flooring.

B. Shop Drawings:

1. Drawings showing the proposed size, rack layout, and wall mounted equipment and the method of mounting the HVAC, emergency generator connection, local control panel, Signal Vital Processor (SVP), event recorders, communication interface equipment, plan rack and table, and construction of each instrument house.

2. Drawings showing the concrete foundations to be used and the ground grid to be installed.

3. Drawings of the pre-cast foundations the Contractor proposes to furnish and install. These drawings shall include, but not be limited to:

c. Physical dimensions.

d. Bolt spacing.

e. Reinforcing steel.

f. Size and detail of galvanized bolts, nuts, and washers.

4. Calculations for the type and quantity of foundations to be used for each installation. These calculations shall include, but not be limited to:

c. Seismic loading.

d. Wind loading.

e. Signed and sealed by a Certified Washington State Structural Engineer.

5. Drawings submitted must follow Design Technology Manual standards.

C. Design of the fire detection system, intrusion detection system, and the environmental control system including cut sheets and plans.

D. Certificates: Labor and Industries Approval:

1. The submittals shall be separate and prior to the structural portion of the L&I gold seal permit application for each location the Contractor makes directly to L&I. Sound Transit will review the submittal for specification conformance prior to the permit applications.

2. Provide the Sound Transit copies of the electrical L&I gold seal permit applications the Contractor makes directly to L&I. Sound Transit will not review this package for approval. Sound Transit shall instead review for approval the electrical design submitted in Section 34 42 35 - Signal Power Distribution System.

3. Test Requirements: Factory test procedure.

4. Special Procedures: Prepare building permit submittals for placing each housing on foundation. Provide the Resident Engineer copies of these permit applications. Sound Transit will not review these documents for approval.

E. Field Electrical Permits, Inspections, and Certification:

1. Submit a copy of all electrical permits prior to installation of signal equipment and signal houses.

2. After the signal house is installed on the foundation and connected to power, coordinate with the Authority Having Jurisdiction to schedule an electrical inspection, notify Sound Transit 24 hours prior to inspection.

3. Repeat this for each signal house location. Incorporate any changes required to meet applicable codes at no additional expense to Sound Transit.

4. Notify Sound Transit when field equipment is ready for the Sound Transit Self Certification Inspection.

PART 2 - PRODUCTS

2.01 MATERIALS

A. Construction: modular, minimum 0.100 inch aluminum or powder coated steel, dust tight, insulated. Line the top and sides of the houses with a fire resistant insulating material complying with the flame spread of 0-20 and a fire rating of seven in accordance with ASTM E84.

B. Provide approved 3/8 - inch high tensile strength, silicon-manganese bronze stud bolts as shown on the Contractor's approved house layout submittal drawings, for externally grounding the housing and providing independent test ground for ground detection system.

C. Doors:

1. Hinges: two minimum, separate castings, bronze or stainless steel hinge pins, pressure lubricating fittings, securely fastened to the housing and door. Lubricate hinges before the house is shipped.

2. Retaining device: two position to secure the door open at 90 and180 degrees. Prevent wear due to vibration when the door is closed and locked.

3. Mainline bungalows shall have two individual exit doors plus doors that access the entrance rack terminals.

2.02 INSTRUMENT HOUSES

A. Size: maximum 14 feet in width by 32 feet in length, houses less than 32 feet long shall be maximum 10 feet wide, 7 feet minimum interior headroom. Large enough to facilitate efficient maintenance, accommodate equipment required to implement the Contractor's design. See Contract Drawings for house layout requirements. If Contract Drawings indicate a size for a location, it shall be considered a maximum size unless special permission is obtained from the RE.

B. Spare capacity:

1. Mainline signal houses minimum 2 rack spaces.

2. Signal houses at terminals shall have 4 spare rack spaces.

C. Insulation value, entrance doors, and walkways:

1. Construct house to meet the requirements of the latest versions of Chapter 50-51 WAC as required by WA L&I and the local authority having jurisdiction.

D. Electrical Working Clearance:

1. Install all energized electrical power equipment with 30 inch working clearance per the NEC as enforced by the local authority having jurisdiction.

2. All electronic and other electrical equipment shall have minimum 30 inch working clearance.

E. Design doors to provide a dust proof and weatherproof seal.

F. Cover the entire floor with 1/2 inch rigid insulation and 3/4 inch fiberglass reinforced polyurethane composite fiberboard with anti-skid textured finish and rated at 24,000 volts AC dielectric strength.

G. Provide fluorescent or LED lighting above the aisles to provide illumination to both sides of the equipment racks, wall shelves, and the plan table area.

H. Environmental Controls:

1. Provide environmental controls including air conditioning unit and ventilation to maintain a temperature between 60 and 78 degrees F under normal operating condition heat loads as defined by four minute operating headways and a personnel load of at least four. Assume maximum exterior temperature to be 98 degrees F.

2. Air changes: minimum of 20 air changes per hour.

3. Air filtration: MERV 9 filters minimum.

4. Ensure air conditioner drains to the exterior of the house. Interlock thermostat controls such that heating and air conditioning cannot both be on.

5. Ensure all HVAC and other ventilation equipment meets the acoustic requirements of all applicable building codes and does not create and ambient noise level higher than 72 dBA in any public area.

I. Fire Detection System:

1. Thermal fire detector: Provide two thermal fire detectors with fixed temperature and rate-of-rise capabilities in accordance with UL 521.

2. Photoelectric Detector:

1. Provide two photoelectric detectors activated by products of combustion.

2. Sensitivity: Adjustable with minimum level required by UL, unaffected by rapid changes of humidity.

3. Detector base: Screw terminals, neon indicator, standard base to accommodate a thermal rate-of-rise detector without additional wiring.

3. Manual pull station: Single action, in accordance with UL 38, convenient and easily accessible, activates audible and visual indicating devices.

4. Send a fire alarm to fire alarm network (part of Building Management System) located in Link Control Center (LCC)

J. Intrusion Detection: Detect opening of a door, sound an audible warning and send alarm to Link Control Center (LCC). Provide keypad near front door to disable alarm an adjustable time prior to alarm sounding. Intrusion detection system shall be fed by a separate breaker and have enclosed battery backup.

K. Combined fire/intrusion detector with keypad, horn battery box, four wire photoelectric detector and thermal detector may be used.

L. Incoming Ac Components:

1. Extend conduit stub-up to the main panel board (or possible transformer before connection to the main panel board).

2. Main panel board: main disconnect 240 Vac circuit breaker, protects complete house load.

3. Vital panel board: Protects the signal loads powered by the UPS.

4. Provide surge protection for the power entrance to the house.

M. Transfer Switch:

1. Switch between normal utility source and standby generator external to house.

2. Size transfer switch for the bungalow load as required by the NEC.

3. Cabinet: National Electrical Manufactures Association (NEMA) 1.

4. Power input: 240/120 single-phase from main panel load. For 480 volt input locations, transfer switch shall be between the transformer 240 volt secondary and the main breaker panel.

5. Close-on rating: 10,000 amps when protected by current breakers.

6. Operation: Direct manual quick-make/quick-break handle outside the enclosure.

7. Type: Double-throw, inherently interlocked construction to absolutely prohibit connection of the two sources.

8. Standards: In accordance with UL 1008 and NEC.

N. Generator connection:

1. Compatible with existing signal houses.

2. Mounting: Integral to the wall of instrument house.

3. Ratings:

1. 100 amp.

2. 600 Vac/ 250 Vdc.

3. 50 – 400 Hz.

4. Description and Configuration:

1. Metallic – Cast Aluminum.

2. 3 Wire.

3. 4 pole.

4. Type 2, NEMA 4, spring loaded or screw type cap, keyed to prevent miss-polarization.

5. Manufacturer: Crouse Hines Arktite, or approved equal.

6. Ground conductor: Connect to instrument house main ground.

O. Panelboards and Circuit Breakers: Coordinate with Electrical System Designer.

P. Provide an external light near each entrance door and external power panel opening at above door height.

Q. Transformers: In accordance with Coordinate with Electrical System Designer.

R. Grounding Bus: Nickel plated hard drawn pure copper grounding bus, with a minimum dimension of eight inches by eight inches by 1/2 inch thick. Drill and tap a minimum of twelve 3/8 inch holes and install twelve 3/8 inch by 1/2 inch long hex head nickel plated bronze studs with one washer.

S. Internal Ground Wire: Insulated No. 6 AWG stranded internal ground wire with green insulation.

T. Ground Rods: Copper-clad steel ground rods of the non-rusting type, as manufactured by the Copperweld Corporation, or approved equal, at least eight feet in length and at least 5/8 inch in diameter. Exothermically weld ground rod connection to ground rod, Cadweld type GR or GT, or approved equal. Make a ground rod connection 4 inches above grade to facilitate maintenance inspection.

U. Each rack shall be electrically isolated from all other racks and the signal house or signal case. Equipment within each rack, requiring grounding, shall be connected to a ground stud at the top of the rack. Each rack ground stud shall, in turn, be connected to the house or case ground bus, as described below. The intent is to be able to completely isolate each rack electrically by removing the connection to the ground stud.

2.03 GRADE AND SPECIAL CROSSING HOUSES

A. Size: maximum 6 feet in width by 6 to 12 feet in length. Large enough to facilitate efficient maintenance, accommodate equipment required to implement the Contractor's design.

B. Spare capacity: minimum 25 percent more equipment and main terminal board space than initial design.

C. Insulation value, entrance doors, and walkways:

1. Construct house to meet the requirements of the latest versions of Chapter 50-51 WAC as required by WA L&I and the local authority having jurisdiction.

D. Electrical Working Clearance:

1. Install all energized electrical components with minimum working clearance of 30 inches. Maintain minimum working clearance between racks once all installed equipment and connections are in place.

E. Design doors to provide a dust proof and weatherproof seal.

F. Cover the entire floor with fiberglass reinforced polyurethane composite fiberboard with anti-skid textured finish and rated at 24,000 volts AC dielectric strength.

G. Provide fluorescent lighting above to provide illumination of the equipment.

H. Environmental Controls:

1. Provide ventilation to maintain the interior temperature below the maximum operating temperature of all the installed equipment, under normal operating conditions. Assume maximum exterior temperature to be 98 degrees F.

2. Air filtration: MERV 9 filters minimum.

I. Fire Detection System:

1. Thermal fire detector: Provide two thermal fire detectors with fixed temperature and rate-of-rise capabilities in accordance with UL 521.

2. Photoelectric Detector:

1. Provide two photoelectric detectors activated by products of combustion.

2. Sensitivity: Adjustable with minimum level required by UL, unaffected by rapid changes of humidity.

3. Detector base: screw terminals, neon indicator, standard base to accommodate a thermal rate-of-rise detector without additional wiring.

3. Manual pull station: single action, in accordance with UL 38, convenient and easily accessible, activates audible and visual indicating devices.

4. Send a fire alarm to Link Control Center (LCC) and to report on the Emergency Ventilation System.

J. Intrusion Detection: detect opening of a door, sound an audible warning and send alarm to Building Management System. Provide keypad near front door to disable alarm an adjustable time prior to alarm sounding. Intrusion detection system shall be fed by a separate breaker and have enclosed battery backup.

K. Combined fire/intrusion detector with keypad, horn battery box, four wire ionization detector and thermal detector may be used.

L. Incoming Ac Components:

1. Extend conduit stub-up to the panel board.

2. Main panel board: Main disconnect 240 Vac circuit breaker, protects complete house load.

3. Provide surge protection for the power entrance to the house.

M. Ground conductor: Connect to instrument house ground.

N. Panelboard and Circuit Breakers: Coordinate with Electrical System Designer.

O. Transformers: Coordinate with Electrical System Designer.

P. Grounding Bus: Nickel plated hard drawn pure copper grounding bus, with a minimum dimension of eight inches by eight inches by 1/2 inch thick. Drill and tap a minimum of twelve 3/8 inch holes and install twelve 3/8 inch by 1/2 inch long hex head nickel plated bronze studs with one washer.

Q. Internal Ground Wire: Insulated No. 6 AWG stranded internal ground wire with green insulation.

R. Ground Rods: Copper-clad steel ground rods of the non-rusting type, as manufactured by the Copperweld Corporation, or approved equal, at least eight feet in length and at least 5/8 inch in diameter. Exothermically weld ground rod connection to ground rod, Cadweld type GR or GT, or approved equal.

2.04 WAYSIDE CASES

A. Door Handle: Make provisions for locking with a standard padlock. The handle shall utilize a multi-point locking system.

B. Provide front and back door cabinet unless Contractor can demonstrate that all wire connections, all tags can be read, and indicators or test points can be maintained from the front. If no rear door is proposed, the Contractor shall also demonstrate that wiring modifications can be made from the front without dismounting equipment or disturbing wiring harnesses.

C. Door vents: Minimum of two per door, covered with fine mesh stainless steel, copper, or bronze screening. Hood the exterior to minimize the entrance of rain. Doors shall be gasketed.

D. Provide vent fan with control by an adjustable temperature thermostat.

E. Provide one duplex convenience outlet (min).

F. Provide a switched medium base lamp holder with a 120 volt, 60 watt equivalent LED lamp at each door.

G. Equipment Racks: Manufactured to fit the type of equipment furnished and the wayside case, include necessary supports for wire and equipment, provide minimum 20 percent spare capacity.

H. Terminations: see Section 34 42 55 - Internal Signal Cable.

I. Paint case interior white and in accordance with the manufacturer's recommendations.

J. Unless the case is specifically required to be fiberglass in the Documents, the case shall be made of either 12.5 inch aluminum alloy type 5052-H32, 14 gauge minimum 304 stainless steel, or steel powder coat covered to colors selected by ST.

PART 3 EXECUTION

3.01 INSTALLATION

A. Instrument Houses:

1. Install the instrument house in location shown on the Issued for Construction (IFC) Drawings. Mount each instrument house on pier foundations, existing pavement, or pad foundation as shown on Issued for Construction Drawings. Level and plumb each instrument house. Use foundations, hardware, and number of piers as necessary to meet seismic zone 3 requirements.

2. House Layout:

a. House layout shall take into account lighting, troubleshooting ease, human factors, and shall be approved by Resident Engineer before commencing installation.

b. Provide instrument racks, equipment, and necessary mounting and fastening materials. House shall be designed to install instrument racks electrically isolated from each other and the house except through the rack ground wire.

c. Provide a separate 19 inch rack to mount communications equipment. Equip rack with power and ground.

d. Furnish space for a wall mounted telephone near the local control computer.

e. Provide a desk chair for the operator's use while operating the SMC. Provide plan space in a shelf or with a plan rack near to the desk.

B. Wayside Cases:

1. Wayside cases installed at-grade shall have precast foundations or concrete pad as shown on the IFC Drawings.

2. Mount wayside case level and plumb. Wayside cases with trackside doors in the open position shall clear center line of the nearest running track by eight feet, six inches, unless otherwise approved by Sound Transit. In areas with restricted clearance, the trackside doors shall clear center line of track by minimum of seven feet.

3. Install pipes for underground cable entrances in the knockout holes provided in the bottom of each case. Secure the pipes to each case by locknuts and bushings. Cables shall enter wayside cases by entrance knockouts provided. Fasten wiring raceway by an approved fastening method. Seal cable entrance pipes with a sealing compound in conformance with AREMA Part 15.2.15 Functional Guidelines for Cold Application Sealing Compound.

4. Inspect the paint of each wayside case after installation and repair any damage in accordance with the paint manufacturer's instructions and as approved by Sound Transit.

C. Grounding:

1. Signal House:

a. Provide a ground grid using at least four ground rods. Three of the ground rods shall be connected by a 4/0 bare copper wire. All connections to the 4/0 copper wire shall be by thermite weld. One ground rod shall route directly to the signal house testing ground.

b. Provide a ground bus of pure hard drawn copper plate, eight inches square (minimum) and ½ inch thick, at the bottom of the entrance rack. Connect the ground bus to the ground grid with a minimum of two #2 AWG copper conductors.

2. Signal Case:

a. Ground signal cases with a minimum of two ground rods. Create a ground grid by connecting the two ground rods with a thermite weld, 4/0 bare copper wire.

b. Connect the grounding pigtail or ground grid to the $^{3}/_{8}$ inch stud bolt provided with each case.

c. Provide an appropriately sized solid copper ground bus within each case. Connect the ground bus to the ground stud with a minimum of two #6 AWG conductor.

d. Connect each instrument rack, entrance rack, and equipment item requiring grounding to the ground bus with minimum of one #6 AWG conductor.

e. Ground resistance shall not exceed 15 ohms.

f. Connect the ground grid to the 3/8-inch stud bolt provided with each case.

g. Provide an appropriately sized, solid-copper ground bus within each case. Connect the ground bus to the ground stud with a minimum of two #6 AWG conductor.

h. Connect each instrument rack, entrance rack, and equipment item requiring grounding, to the ground bus with a minimum of one #6 AWG conductor.

i. Ground resistance shall not exceed 15 ohms.

j. Connect each instrument rack, entrance rack, and equipment item requiring grounding, to the ground bus with a minimum of one #6 AWG conductor.

k. Ground resistance shall not exceed 15 ohms.

D. Precast Foundation:

1. Size and quantity of foundations shall be accordance with the seismic calculations for the size, weight, and location of each house or case.

2. Install in accordance with the bungalow manufacturer's recommendations and as specified in Section 34 42 07 - Pre-Cast Concrete Foundation.

END OF SECTION

SECTION 34 42 53

INSTRUMENT RACKS

PART 1 - GENERAL

1.01 SUMMARY

A. Section includes:

1. Requirements for the design, procurement, and installation of instrument racks and Main Terminal Board (MTB).

1.02 REFERENCES

A. This Section incorporates by reference the latest revisions of the following documents:

1. American Railway Engineering and Maintenance-of-Way Association Communications & Signal Manual of Recommended Practices AREMA):

a. Part 14 - Electrical Devices, Foundations, and Hardware.

2. International Code Council (ICC):

a. IBC - International Building Code.

3. Electronic Industries Association (EIA):

a. EIA-310 – Standard rack spacing.

4. Sound Transit Design Technology manual:

a. Section 12 – Record Drawings

1.03 SUBMITTALS

A. Shop Drawings:

1. Detailed arrangement plans of equipment on each rack prior to assembly of racks.

2. Room layout installation drawings showing equipment locations.

3. Drawings showing method of grounding.

4. Drawings showing proposed method of mounting signal maintenance computer, vital microprocessor, event recorders, communication interface equipment, and plan rack and table.

5. All drawings must follow Design Technology Manual standards.

B. Design Submittals: Calculations showing rack installation meets local and state seismic codes. Calculations shall be performed and sealed by a structural engineer registered in Washington.

C. Product Data: Powder coat or paint material and procedure.

D. Special Procedures:

1. Rack Name Tag Information Including: Type, appearance, size, and mounting method.

1.04 DELIVERY, STORAGE AND HANDLING

A. Delivery and Acceptance Requirements: Ship racks for signal rooms in individual crates, racks in pre-fab signal house are to be shipped installed in the house but shall be secured so that they are not damaged during shipping. Inspect all racks upon arrival for any damage in shipping.

B. Storage and Handling Requirements: Store racks for the signal rooms in their shipping crates, inside a building prior to installation, only remove them from the crates after they have been transported to the station signal room.

PART 2 - PRODUCTS

2.01 PERFORMANCE REQUIREMENTS

A. House/ room layout:

1. Final house/ room layout is at discretion of Contractor, but shall be uniform over all rooms. Modifications to equipment provided by others as shown on Issued for Construction (IFC) Drawings required by room layouts that deviate from IFC Drawings shall be at no cost to Sound Transit.

2. House/ room layout shall consider lighting, troubleshooting ease, human factors, and shall be approved by Resident Engineer before commencing installation.

3. House/ room has been designed to install instrument rack sections as shown on approved installation drawings.

4. Provide instrument racks, equipment, and necessary mounting and fastening materials.

5. See IFC Drawings for equipment relative locations, clearance requirements, spare racks, and other requirements.

2.02 INSTRUMENT RACKS

A. Frame: 14 gauge minimum cold rolled steel, open frame weldments to accommodate mounting of standard 19-inch panels, fire-retardant.

B. Height: 7 feet 6 inch maximum.

C. Grounding Posts and Grounding Jumpers: Bolted type to permit isolation of rack for testing by removal of ground wire connections.

D. Internal Ground Wire: No. 6 AWG stranded ground wire, green insulation.

E. Chassis Supports: 11 gauge minimum cold rolled steel, capable of being mounted directly to panel-mounting plugboard support bars for each row of relays and be of sufficient strength to support manufacturer’s equipment to be mounted thereon:

1. Hole spacing shall be per EIA-310.

F. Insulated Terminals: Conform to Part 14.1.5 of AREMA Communication and Signals Manual.

G. Finish: Powder coat or paint.

H. Wire Supports: Steel or material of non-flammable composition.

2.03 MAIN TERMINAL BOARD

A. Construction:

1. Width: Maximum 12 inches from wall.

2. Frame: 14 gauge minimum, cold rolled steel.

3. Material: Fire resistant or fire retardant plywood.

4. Paint: One coat universal alkyd primer and one finish coat of latex paint matching the manufacturer's standard for entrance racks:

a. Finish Color: Gray, ANSI-61.

B. Internal Ground Wire: No. 6 AWG stranded ground wire, green insulation.

C. Grounding Plates: 1/2-inch thick minimum, copper with nickel plating, corners free of sharp edges.

D. Fully equip main terminal boards with required number of terminal blocks, tags, rack and row identification, and accessories.

E. Terminal Mounting:

1. Arrange terminal blocks and spacing of terminals to permit each internal wire and its field wire interconnection to be separated on an individual basis, without removing either wire from its terminal.

2. Provide test link straps.

3. Spare Terminal Posts: 10 percent spare with a minimum of 25 for each rack.

F. Grounding Plates: Bolted type to permit removal of ground wire connection for testing.

2.04 FOLD-UP DESK

A. At pre-fabricated signal rooms only provide a plan desk.

B. Material: Steel, minimum 14 gauge.

C. Mounting: Wall mounted.

2.05 EQUIPMENT PROVIDED UNDER THIS CONTRACT SHALL MEET SEISMIC REQUIREMENTS SPECIFIED IN IBC.

PART 3 - EXECUTION

3.01 INSTALLATION

A. Instrument Racks:

1. When signal room is part of a station, parking garage or any other ST facility then paint signal room floor with electrically conductive epoxy to create a surface which is static dissipative before installing racks or equipment in signal rooms.

Apply a minimal thickness of 50 mils, or greater if recommended by the manufacturer, to the entire floor of each signal room.

2. Locate terminal, plug connector, resistors for energy buses, and power panel on upper portion of rack for connecting wires and cables.

3. Space insulated terminals as specified in Part 14.1.5 of AREMA Communication and Signals Manual.

4. Provide a typed or printed name tag on a front plate of each rack or cabinet.

5. Provide wire supports for interior wire raceway.

6. Provide chassis supports or guides for auxiliary support of heavy equipment, such as power supplies.

7. Powder coat or paint each instrument rack.

8. Provide a minimum of 15 percent spare terminals on each instrument rack.

B. Grounding:

1. Install instruments racks in such a manner as to be insulated from ground and from supporting frameworks or wire troughs.

2. Connect each grounding post or plate to main ground bus located on entrance rack with a #6 AWG green insulated conductor without any intermediate termination.

3. Provide grounding posts and ground jumpers with each rack to allow for easy individual disconnection of any rack from the grounding system.

4. Provide grounding plate(s) with each main terminal board section sized sufficiently for installed and spare cabling.

5. Electrically connect racks and main terminal board sections to each other only by internal ground cable.

C. Relay and Component Mounting:

1. Group rows of racks and instruments so that similar types of equipment or functions of a similar nature are adjacent to each other.

2. Mount relays or components below 6 feet 6 inches from floor of the room.

3. Mount relays or components above 10 inches from floor of the room.

4. Provide a minimum of 20 percent spare space on each instrument rack for additional equipment.

5. Provide two spare cable plug connectors for each rack with plug connectors.

D. Wiring:

1. Wire instrument racks in accordance with Section 34 42 55 - Internal Signal Cable.

2. Pre-wire instrument racks, insofar as possible, at place of manufacture.

3. Use same interconnecting cables in field installation that were used in factory test of instrument racks.

4. Provide vital inter-rack wiring direct from relay to relay.

5. Harness field-installed wire bundles within rack in a neat manner and tied with nylon tie wraps.

6. Provide insulated terminal cap nuts to terminals with 120 or higher volts.

E. Main Terminal Board:

1. Terminate incoming wires, including spare wires, on AREMA terminal binding posts in accordance with AREMA Signals and Communications Manual, Part 14.1.5.

2. Provide terminal board racks for terminating incoming wire and cable and making interconnections to internal wiring on instrument racks.

3. Install interconnecting cables, wiring, and connections and terminate incoming cables as shown on approved drawings.

4. Provide necessary fittings and fastenings materials.

5. Properly anchor to wall in accordance with seismic requirements.

6. Provide materials needed to assemble main terminal boards one to another to form complete sections.

7. Route wires from cable tray in Panduit or approved equal cable management system along board surface to terminal location.

8. Provide a terminal tag or cable tag for each terminal and terminating wire.

9. Provide gold nut connection for cables leaving the signal house.

F. Seismic Design and Bracing:

1. Support racks at top and bottom.

2. Provide suitable bracing and anchorage.

END OF SECTION

SECTION 34 42 55

INTERNAL SIGNAL CABLE

PART 1 - GENERAL

1.01 SUMMARY

A. Section includes:

1. Requirements for the design, procurement, installation, and testing of internal wire and cable.

1.02 REFERENCES

A. This Section incorporates by reference the latest revisions of the following documents:

1. American National Standards Institute (ANSI):

a. ANSI C1 - Specifications of General Requirements for a Quality Program.

2. American Railway Engineering and Maintenance-of-Way Association Communications & Signal Manual of Recommended Practices (AREMA):

a. Part 10 - Wire and Cable.

b. Part 14 - Electrical Devices, Foundations, and Hardware.

3. ASTM International (ASTM):

a. ASTM B3 - Specification for Soft or Annealed Copper Wire.

b. ASTM D570 - Standard Test Method for Water Absorption of Plastics.

c. ASTM D3032 – Standard Test Methods for Hookup Wire Installation.

4. Insulated Cable Engineers Association (ICEA):

a. ICEA S-95-658/ NEMA WC 70 – Non-shielded Power Cables Rated 2000 Volt or Less.

5. Military Specification (MIL):

a. MIL-W-22759/ SAE AS22759 - Wire, PTFE, ETFE Insulated, Copper or Copper Alloy Conductor.

6. Institute of Electrical & Electronic Engineers, Inc. (IEEE):

a. IEEE 383 - Standard for Qualifying Class 1E Electric Cables and Field Splices for Nuclear Power Generating Stations.

7. National Electrical Manufacturer's Association (NEMA):

a. NEMA HP 100 - High Temperature Instrumentation and Control Cables.

b. NEMA HP 100.2 - High Temperature Instrumentation and Control Cables Insulated and Jacketed with ETFE Fluoropolymers.

8. SAE International (SAE):

a. SAE AS22759/16 - Wire, Electrical, Fluoropolymer-Insulated, Extruded ETFE, Medium Weight, Tin-Coated Copper Conductor.

9. Underwriter's Laboratories (UL):

a. UL 224 - Extruded Insulated Tubing.

b. UL 1581- Electrical Wires, Cables, and Flexible Cords.

1.03 SUBMITTALS

A. Product Data: Manufacturer product datasheets and complete technical data for cable and ancillary devices.

B. Test Reports: Certified test reports for factory testing.

C. Manufacturer's Instructions:

1. Cable Manufacturer Documents including qualification data.

2. Cable Installation Plans.

3. Cable Pulling Report: In accordance with requirements of NEC and manufacturer's recommendations.

1.04 QUALITY ASSURANCE

A. Manufacturer Qualifications:

1. Manufacturer shall supply evidence of a minimum of 15 years reliable experience in supplying vital circuit signal cables of type specified on at least five Class I railroads or transit properties with a minimum of 2,000,000 cable feet installed.

2. A letter from each proposed wire and cable manufacturer, on manufacturer's letterhead, certifying that proposed manufacturer has a copy of the Contract Section 34 42 55 - Internal Signal Cable and proposed manufacturer will fully comply with requirements of these Specifications.

3. Quality Assurance Program: Demonstrate compliance with Quality Assurance Program that ensures a thoroughly tested cable with long service life. Focus will be on formal assurance that cable failure cannot be attributed to actions or lack of actions by the manufacturer. In accordance with SAE AS22759.

B. Wires and cables shall meet or surpass tests and requirements specified in AREMA Communication and Signal Manual, Part 10.3.

1.05 DELIVERY, STORAGE AND HANDLING

A. Delivery and Acceptance Requirements:

1. Shipping:

a. Provide cable closely and tightly wound in a uniform manner, in each layer, on reels. Wind each length of cable on a separate reel.

b. Manufacturer shall be responsible for change in shape of cable occurring in normal transit which results in an increase in maximum diameter beyond that specified.

c. External protective wrapping on reels shall be secured by at least two steel bands to ensure damage free shipment.

B. Reels:

1. Diameter: Minimum 12 times cable diameter.

2. Arbor Hole: Admit a spindle 2-1/2 inches in diameter without binding.

3. Maximum Width: 48 inches.

C. Cable Ends:

1. If inner end of cable projects through flange of reel, protect inner end with suitable cover of metal, having rounded ends and sides, and securely fastened in place to protect cable end.

2. Secure both ends of cable on reel to prevent their becoming loose in transit or handling of reel. Secure inner end of cable but ensure it is accessible and protected from injury.

3. Protect both ends of each length of cable with wrappings of rubber and plastic tape, or an effective boot taped or sealed into place. Seal cable against entrance of moisture after passing factory tests.

4. Do not use friction tape, other than an external mechanical protection over an adequate rubber and/or plastic tape.

5. Provide cable end protection adequate to protect cable in shipment and prolonged external storage in the weather:

a. Markings: Paint an arrow on one head of each reel, greater than 38 inches, pointing opposite direction from outer end of cable with words "Roll This Way". Provide letters not less than 3/4-inch height and an arrow not less than 6 inches in length and 1/2 inch in width.

D. Handling Requirements: In accordance with AREMA Part 10.4.1.

E. Storage: Store wire and cable in secure and dry storage facility, in accordance with National Electrical Contractors Association (NECA) 1.

PART 2 - PRODUCTS

2.01 STRANDED WIRE

A. Conductor: Stranded Soft Annealed Copper in accordance with ASTM B3.

B. Construction: In accordance with Table I of SAE AS22759/16.

C. Abrasion Resistance: In accordance with Table A - ABRASION RESISTANCE, below.

TABLE A
ABRASION RESISTANCE

Wire Size (AWG)	Min. Resistance (Inches of Tape)	Weight Support Bracket	Weight (Pounds)	Tension Load (Pounds)
22	26	A	1.0	1.0
20	26	A	1.0	1.0
18	27	A	1.0	1.0
16	28	A	1.0	2.0
14	19	B	3.0	2.0
12	29	B	3.0	2.0
10	36	B	3.0	3.0
8	35	B	3.0	3.0

D. Bend Testing: In accordance with Table II of SAE AS22759/16.

E. Insulation: Ethylene-Tetrafluoroethylene (ETFE) in accordance with NEMA HP 100 and NEMA HP 100.2.

F. Flame Spread Test: UL 1581.

G. Vertical Flame Test: IEEE 383.

2.02 MULTI-CONDUCTOR CABLE

A. Outer Jacket: Thermoplastic Rubber (TPR) rubber, in accordance with IEEE 383, stabilized for outdoor exposure.

B. Outer Sheath: Nominal thickness in accordance with ICEA S-95-658.

C. Barrier Tape: 0.005 inch thick; minimum 25 percent overlap.

D. Individual Conductors: Sized to meet 150 percent of load requirements, minimum 20 AWG, stranded.

E. Cables: Maximum 50 conductors, for use with non-vital plug connectors.

F. Multi-Conductor Cables: Minimum two spare conductors.

G. Assemble individual or twisted pairs, of insulated wires into a tight, cylindrical form. Assemble individual or twisted pairs helically and with adjacent layers wound in opposite directions.

H. Place finished cables in water at room temperature. After 48 hours immersion and while still immersed, test conductors for breakdown at a voltage of 2,500 V (rms) for five minutes.

2.03 IDENTIFICATION

A. Individual Conductors:

1. Marking Interval: Maximum 12 inches.

2. Identifying Markings: Permanent, easily readable and understandable.

3. Mark each individual conductor with the following information:

a. Manufacturer’s name.

b. Year in which wire is manufactured.

c. Size of conductor.

d. Type of insulation.

B. Multi-Conductor Cable:

1. Stranded wires used in multi-conductor cable: Numbered or color coded in addition to the basic four-part identification.

2. Marking Interval: Maximum 36 inches.

3. Mark cable outer sheath with the following information:

a. Manufacturer's name.

b. Year of cable manufacture.

c. Number and size of conductors.

d. Type of insulation in wires.

e. Type of outer sheath insulation.

f. Voltage rating.

C. Wire Tags:

1. Approved Manufacturers: Brady HEATEX™ labels or approved equal.

2. Material: Polyolefin heat shrinkable tubing.

3. Standards: UL224 and ASTM D570.

4. Print: Wire origin, function, and destination.

D. Cable Tags:

1. Approved Manufacturers: Brady HEATEX™ labels or approved equal.

2. Material: High Density, cross laminate Polyethylene.

3. Attachment: Attach to cable with cable ties, both ends.

4. Zero Halogen: In tunnel areas use zero halogen tags, that if burned, the waste products will only be H_2O and CO^2.

5. Print: Cable origin, function, and destination.

2.04 TERMINALS

A. Bus Connector Type: In accordance with AREMA Communications and Signal Manual, Part 14115-1 to complete the circuit.

B. Terminate inter-rack vital and non-vital wiring including spare conductors on approved terminal blocks or with approved connectors.

C. AAR Terminal Blocks: In accordance with Arema Communication and Signals Manual of Recommended Practices, Part 14.1.6.

D. Signal Terminal Binding Posts: In accordance with AREMA Communication and Signals Manual, Part 14.1.10.

E. Terminal Post Insulators:

1. Type: Fire-resistant.

F. Stranded wire, compression-type, insulated wire terminals: In accordance with AREMA Communications and Signal Manual Part 14.1.1.

1. For terminating No. 16 and No. 14 AWG Stranded Wires: AMP, Inc. “Ring Tongue Plasti-Bond”, similar to Catalog No. 320563, or approved equal.

2. For terminating Insulated Wires Nos. 12 – 10: AMP Catalog No. 35273, or approved equal.

3. For terminating Nos. 22 – 16 AWG solid or stranded on No. 8 studs: AMP Catalog No. 320571 or approved equal; AMP Catalog No. 320554, or approved equal.

4. For terminating No. 16 – 14 AWG solid or stranded on one-quarter inch studs: AMP Catalog No. 320563, or approved equal.

G. Compression-type insulated terminal connections: single washer on top of terminal; require two washers for one terminal, three washers for two terminals; complete with double nuts torqued to rated value of nut.

H. DIN rail type terminals shall be spring compression terminals as manufactured by Wago, Entrelec, or Weidmuller.

PART 3 - EXECUTION

3.01 INSTALLATION

A. Installation design and methods shall conform to:

1. Cable manufacturer’s pulling requirements.

2. Part 10.4.1 of AREMA Communications and Signal Manual.

3. NFPA 70 - NEC

4. NECA 1

B. Provide internal wire and cable for connections between equipment in signal rooms.

C. If energy is distributed to various points in a signal equipment room or junction box by wire loops, show details of loops and its various connections on circuit plans. Connect both ends of wire loops to the bus.

D. Internal wiring design shall contain no point-to-point redundancy of wires for increased current capacity.

E. Tie wiring and cabling dress in harness arrangements with a high strength approved dielectric wire tie designed not to invade wire insulation. Use of electrical tape is not permitted for securing wiring and cables. Trim and locate ties to eliminate hazard to personnel from sharp edges.

F. Provide nylon straps for bundling and cabling of conductors where two or more single conductors are exposed in internal rack bundles, cable trays, or whenever wires are to be bundled. Install straps on cables at intervals not exceeding two feet.

G. All signal cable runs shall be continuous, without splices between cable terminating locations. No splices will be allowed in vital or non-vital signal cables.

H. Cable Tray Installation:

1. Lay cables in place; do not pull cables. Provide a minimum amount of crossover between cables.

2. Equip cable trays with dividers to separate power, signal, and communications cable.

I. Terminations:

1. Observe minimum bend radius while training wires and cables into final position. Provide slack at terminals in an amount sufficient for two re-terminations.

2. Perform termination work under clean and dry conditions. Install wire terminals only with tools and techniques recommended by terminal manufacturer. Install no more than two wires on one AAR terminal binding post.

3. Provide a lug for terminating heavy wires or signal power wires.

4. Terminate track wires and cables on lightning arresters. Terminate inter-rack vital and non-vital wiring including spare conductors on AAR terminal blocks.

5. Edge connector cables from Signal Vital Processor (SVP) printed circuit boards, electronic modules, and inter-rack wiring to/from SVP may be terminated on spring compression terminals located at top of SVP rack.

6. Plug connectors may be used for inter-rack wiring in accordance with Section 34 42 57 - Plug Connectors.

J. Terminal Post Insulators:

1. Provide terminal posts located on terminal boards in junction boxes and signal rooms used to terminate circuits carrying 55 ac Volts or greater with a protective insulator.

2. Terminal Post Insulator: Individual for each terminal post.

K. Identification:

1. Tag wires and cables during termination process. Tag both ends of wires and terminal boards.

2. Each tag shall include three lines: Terminal location; circuit function nomenclature; terminal location on other end of wire.

END OF SECTION

SECTION 34 42 57

PLUG CONNECTORS

PART 1 - GENERAL

1.01 SUMMARY

A. Section includes:

1. Requirements for the procurement and installation of plug connectors.

1.02 REFERENCES

A. This Section incorporates by reference the latest revisions of the following documents:

1. Military Specification (MIL):

a. MIL-STD-202 - Test Method Standard for Electronic and Electrical Component Parts.

2. Sound Transit Design Technology Manual:

a. Section 12 – Record Drawings

1.03 SUBMITTALS

A. Product Data: Description and catalog cut of proposed plug connectors to be furnished including proven equipment history.

B. Shop Drawings: Complete drawings for each type of plug connector to be used prior to manufacture or procurement of plug connectors. Include complete parts lists and information required to order replacement parts.

C. Drawings submitted must follow Design Technology Manual standards.

PART 2 - PRODUCTS

2.01 PLUG CONNECTORS

A. Block Assembly:

1. Material: Two part molded plastic connector block.

2. Connector Assemblies: Mechanically locked and keyed for both connector block halves, with tolerance that allows connector to be connected and disconnected easily by hand.

3. Housing: Steel, aluminum, Circular Plastic Connectors (CPC).

B. Pin-and-Socket Contacts:

1. Contacts: Solderless, extractable pin-and-socket.

2. Number: Maximum of 50.

3. Material: Commercial bronze or brass, plated with gold over nickel under plate.

4. Retention Springs: Stainless steel.

5. Wire Sizes: Accept wire sizes 16 through 22, AWG.

6. Termination Resistance: In accordance with Method 307 of MIL-STD-202, at rated current specified for each wire size listed in Table A.

7. Spare Contacts: 20 percent spare.

8. Current Rating and Termination Resistance: In accordance with Table A.

TABLE A

Wire Size (AWG)	16	18	20	22
Minimum Current Rating (Amperes)	13	10	7.5	5
Maximum Termination Resistance (Milliohms)	1.7	2	2.7	4

PART 3 - EXECUTION

3.01 INSTALLATION/APPLICATION

A. Provide multiple position connector assemblies.

B. Provide a strain relief device for wiring after it leaves connector assembly.

C. Provide means to mechanically lock and key the connector assembly.

D. Provide 8 sets of tools used to apply plug connector contacts to wire and tools used to extract contacts from plug connector blocks of size and type recommended by manufacturer of plug connector assemblies. For each tool, furnish instructions for a complete plug connector assembly.

END OF SECTION

SECTION 34 42 58

RELAYS

PART 1 - GENERAL

1.01 SUMMARY

A. Section includes:

1. Requirements for the design, procurement, installation, and testing of vital relays and non-vital relays.

1.02 REFERENCES

A. This Section incorporates by reference the latest revisions of the following documents:

1. American Railway Engineering and Maintenance-of-Way Association Communications & Signal manual of Recommended Practices (AREMA)

a. Part 2 - Railway Signal Systems

b. Part 6 - Relays

1.03 SUBMITTALS

A. Product Data:

1. Description and catalog cut of proposed relays to be furnished including proven equipment history of 5 years successful service in North America.

2. Upon final verification, index relay form cards by serial number and submit them.

3. Mounting arrangements.

B. Calculations:

1. Calculations to determine timing characteristics (both slow pick and drop) for time element relays provided under this contract.

2. Calculations for software timing relays used as a part of a microprocessor system.

3. Perform calculations in accordance with AREMA Communication and Signals Manual, Part 2.4.20.

C. Testing Documents:

1. Source Quality Control:

a. Test Program Plan for factory testing.

b. Test Procedures and Test Results for each factory test for each vital relay, prior to shipment.

c. Certified Test Reports for factory testing.

2. Field Quality Control:

a. Test Program Plan for field testing.

b. Test Procedures and Test Results for each field test for each vital relay.

c. Certified test reports for field testing.

3. Record pickup and drop-away values for vital relays on AREMA relay cards (AREMA Communications and Signal Manual Form 641-1 or AREMA Communications and Signal Manual Form 645-1) and submit to Resident Engineer.Use one AREMA relay card for each vital relay. Use cards shipped with relay.

4. Manufacturer's manual describing installation.

5. Operation and maintenance manual for each vital and non-vital relay used on the job.

1.04 DELIVER, STORAGE, AND HANDLING

A. Ship vital relays separately from wired racks in which they are to be used.

B. Package vital relays individually, each in a sturdy corrugated cardboard box with rack or mounting position of relay printed on box.

C. Store relays in a protected area until tested and installed.

PART 2 - PRODUCTS

2.01 PERFORMANCE REQUIREMENTS

A. Contractor must use Signal Vital Processor (SVP) logic to minimize the need for relays.

B. Relay logic functions must include:

1. Signal lighting.

2. Traffic, use mag stick relay.

3. System transfer.

4. Approach signal flashing.

5. Line wire drivers and receptors.

6. AC Power Frequency Track Circuit.

7. Non-vital alarms.

8. Provide one normal and one reverse switch operating relay and a switch current overload relay for each switch and lock movement unless a vital solid state switch control module is used.

C. Vital relays must be used for vital functions, and may be used for non-vital functions.

D. Use slow acting relays for slow pickup or slow release functions.

E. Use quick acting relays for quick pickup or quick release functions.

F. Use vital timer relays for timer delay functions.

G. Spare Contacts

1. Single relays must have a minimum of one spare dependent front-back relay contact per relay, except for switch machine control relays.

2. Single repeater relays must have a minimum of one spare dependent front-back relay contact for either repeater relay or primary relay.

3. Multiple repeater relays must have a minimum of one spare dependent front-back relay contact for both final repeater relay and primary relay.

2.02 MATERIALS

A. Where relays are required for specific applications, they must meet the following requirements:

1. Quick Detachable plug-in type.

2. Identified with manufacturer's name, model number, contact identification and serial number, as applicable.

3. Interchangeable with relays of the same type used elsewhere.

4. Equipped with handrip or other method for easy removal of insertion into plug-boards.

5. Equipped with latching mechanism or other type of fastening arrangement to provide firm attachment in the plug-board.

6. Status of energized or de-energized for relays shall be easily viewed from the front.

2.03 MANUFACTURED PRODUCTS

A. Relays:

1. Relays must be uniform in design and contact assembly for each type of relay.

2. Relay enclosures must be dust-proof, and have provisions for ventilation and heat dissipation.

3. Relays must be made of non-combustible material.

4. Relays must be rack mounted.

5. Relays must be designed for nominal voltage of 12 Vdc.

6. Relays must have operable Voltage Range of 7 Vdc to 16.5 Vdc.

7. Relays must be operable on nominal voltage and must becapable of picking up and withstand continuous operation without damage when energized in operable voltage range.

8. Relays must have plug-in style bases that are keyed to prevent wrong type, style, contact configuration, or operating characteristics from being installed into wrong plug base.

9. Relays must comply with or exceed requirements of the following AREMA Communications and Signals Manual:

a. Part 6.1.20, Recommended Design Criteria for Time-Element Relay, Tractive-Armature Type.

b. Part 6.1.35, Recommended Design Criteria for Alternating-Current Induction Type Relay.

c. Part 6.1.40, Recommended Design Criteria for Flasher Relay, Shelf or Wall Mounting.

d. Part 6.2.1, Recommended Design Criteria for Tractive-Armature Direct Current Neutral Relay, Plug-In Type.

e. Part 6.3.5, Recommended Design Criteria for Detachable-Type Neutral Direct-Current Relay for Non-Vital Circuits.

B. Vital Relays:

1. Must permit energization and de-energization of relay for testing without disturbing relay or wiring.

2. Must have arc suppression built into relay or attached to base for vital coils.

3. Must have relay bases equipped with removable receptacle springs.

4. DC relays must be made by the same manufacturer.

5. General purpose vital relays must have six dependent front-back contacts.

6. Switch operating relays, unless a vital solid state switch driver module is used in place of relays,must:

a. Be identical.

b. Be biased neutral relays.

c. Have a minimum of four xtra heavy duty contacts with magnetic blowout feature to effectively interrupt high currents and minimize wear.

7. Timer Relays:

a. Vital Relay Timers must be solid-state or software.

b. Vital timer relays must be identical.

c. Must have a maximum of 1.0 second adjustment increment.

d. Must not be possible to adjust timing intervals when sealed.

e. Must not require the use of resistors, capacitors, or diodes in parallel or in series with relay’s coil mustas means to adjust the time.

8. Vital AC track Relays:

a. Must be made by same manufacturer.

b. Must be two element 100 Hz vane type.

c. Must have local winding voltage range of 100 to 135 Vac.

d. Must have control winding voltage range of 0.75 to 5 Vac, inclusive.

e. Must have a minimum of two dependent front-back contacts.

C. Non-Vital Relays (Normal Duty):

1. Must be plug-in type.

2. Must have transparent plastic covers.

3. Relay cabinet coversmust permit viewing of relay contacts without disassembly.

4. Relay indication must use LED, mounted as part of relay, connected across coil to indicate relay is energized.

5. Must be capable of carrying 1 A (minimum) continuously without contact resistance exceeding 5 ohms.

6. Front-back contacts must be capable of breaking a load consisting of three vital or non-vital relays connected in parallel, at least 10,000,000 times without contact resistance exceeding 5 ohms measured at 10 milliamps.

7. Must have four dependent front-back contacts.

8. Non-Vital Relays used for transferring serial data connections between redundant processors must have gold contacts.

2.04 RELAY BASES

A. Install in accordance with AREMA Communications and Signals, Part 6.2.2.

B. Individual conductors of case wire must be crimped to each receptacle spring.

C. Insert receptacle spring into rear of appropriate plug board.

D. Vital relays, when inserted into front of relay bases, must make direct contact with appropriate receptacle springs.

E. Wires must not be soldered directly to receptacle springs.

2.05 TAGGING

A. Relays Must Have Three Associated Tags:

1. One Tag showing relay name on card described above.

2. Name on front and back of base/plugboard.

3. Easily replaceable but must not come off during normal service.

2.06 SOURCE QUALITY CONTROL

A. Tests and Inspections:

1. Factory test vital relays in accordance with “shop” requirements of AREMA Communications and Signal Manual Part 6.4.1 (for DC relays) or Part 6.4.5 (for AC relays).

PART 3 - EXECUTION

3.01 INSTALLATION

A. Provide and test relays required by Contractor's design, both vital and non-vital.

B. Repeat manufacturer's approved factory test procedure as described in Section 34 42 98, Signal System Testing, in the field, prior to installing relays in their final positions in wired racks.

C. Verify that each relay serial number, location and relay name shown on cards corresponds to actual field conditions.

D. Plug non-vital relays into receptacles mounted on DIN rails in racks or cabinets.

END OF SECTION

SECTION 34 42 59

SIGNAL VITAL PROCESSOR

PART 1 - GENERAL

1.01 SUMMARY

A. Section includes:

1. Requirements for the design, procurement, installation, and testing of Signal Vital Processors, portable maintenance computer, and diagnostic and development tools.

1.02 REFERENCES

A. This Section incorporates by reference the latest revisions of the following documents:

1. American Railway Engineering and Maintenance-of-Way Association Communications & Signal Manual of Recommended Practices (AREMA):

a. Part 16 - Vital Circuit and Software Design.

1.03 SUBMITTALS

A. Product Data:

1. Description and catalog cut of proposed Signal Vital Processors (SVP) to be furnished including proven equipment history.

2. Complete technical data verifying that system proposed is in compliance with requirements of this Section.

3. Catalog cut and manual for Application Firmware Testing and Development Tool. Rejection of testing and development tool is a rejection of entire SVP system.

B. Proposed method of keying for circuit boards.

C. Relay Equivalent Circuits:

1. Convert application software, by automatic process, into relay equivalent circuits.

2. Depict application logic using standard drop line relay symbols such that an experienced signal person with no knowledge of ladder logic or Boolean algebra will be able to interpret programs.

3. Show circuits in normal position for drop line relay contacts up or down. Normal position is defined as signal system has no track occupancies, traffic circuits are in normal direction, interlocking signals are at stop, switches are in normal position, no speed restrictions are applied, no alarms, grade crossings not activated, and normal direction vent zone signals having proceed aspect.

4. Submit sample prior to writing of application programs.

5. Include logic including interface tables with design submittal for each location. In addition to interfaces to room wiring, interfaces include to Link Control Center

(LCC), other SVP in that location, SVP in adjacent locations, data I/O for LCP functions, data for recording, and data for track circuit speed command control.

D. Method of adjustment, bits per second (BPS), setting for non-vital communication ports.

E. Software Quality Assurance Plan.

F. Source Quality Control:

1. General: Section 34 42 98 – Signal System Testing identifies requirements for factory and field testing. Submit SVP testing documents under that Section.

G. Safety Related Application Condition (SRAC) Certification

1. The Contractor shall provide confirmation from the contractor's application engineer that all SRACs from the manufacturer of SVP and track circuits have been met. The application engineer shall provide a certification letter and evidence documenting that the component applications and programming meet the OEM's SRACs for the SVP and track circuits, and that the configuration of the inputs and outputs that drive the processor and the system meet the same OEM's SRACs.

2. The SRAC documentation shall include a table with the following columns:

a. Identification number for each SRAC.

b. Brief description of the SRAC.

c. Statement on how the design fulfills the criteria within each SRAC.

3. Include with the SRAC documentation the OEM's application requirements for all equipment used for the SVP and track circuits.

H. Closeout Submittals:

1. As-Built SVP Logic:

a. Application format:

1) Can be burned on to SVP memory chip or flash software into the SVP.

2) Can be modified using the application development tool.

b. Text Format:

1) Logic equations in alphabetical order.

2) Relay Equivalent Circuits.

3) All report assignments used for communications.

4) All I/O assignments,

5) Timer min/max /default settings.

6) Alphabetical index identifying page numbers for each equation.

c. Hard copy:

1) 3 ring binder.

d. Soft copies:

1) 3 copies

2) On CD or USB thumb drive

3) PDF text format and application format.

2. Record Documents: Include Relay Equivalent Circuits with as-built drawings for each location.

PART 2 - PRODUCTS

2.01 SVP SYSTEM DESIGN REQUIREMENTS

A. Manufacturers: Hitachi STS, Alstom.

B. Software Design Standard: AREMA Communication and Signals Manual, Part 16.

C. Provide same basic family of SVP for each location.

D. Design SVP system to control both vital and non-vital signal functions at interlockings, wayside signals, and locations requiring logic processing for Signal System.

E. Eliminate use of both vital and non-vital relays to maximum extent possible through use of SVPs; except where relays are designated in the typical circuits or specified for that function.

F. Base circuit design upon a single processor using closed loop principles for safety; however system design shall be a dual SVP units providing redundancy.

G. System shall incorporate continuous self-checking features to ensure both equipment and programs function correctly.

H. Vital output states of the microprocessor unit shall be verified a minimum of once every second to ensure correspondence between actual and requested values:

1. A vital circuit shall be used to de-energized affected output when such outputs fail to correspond to the required state.

I. Vital input states of the microprocessor unit shall be verified a minimum of once every second:

1. Continuous vital checks shall be included in processing of inputs to ensure the database has not been corrupted.

2. Checks shall be included to ensure the independence of inputs from one another.

3. Erasable portions of vital microprocessor memory shall have appropriate physical or electrical protection to prevent unauthorized or accidental charges.

J. Functions required for system integrity evaluation, error logging, hardware interface, timing, data communication, application logic execution, and application of power to vital controller shall be fully integrated and executed by SVP. Failure to pass system integrity tests shall cause system to cease data communications and remove power form hardwire outputs in a completely failsafe manner.

K. Develop circuit design and application dependent software. Basis of dependent software design shall use existing ST nomenclature and logic structure.

L. Design SVPs with a complete set of input/output logic for the location.

M. Design each SVP with sufficient capacity for the signal functions at the location plus I/O – spare board capacity.

N. Failure of a vital controller component shall not cause vital interlocking system to fail to a less restrictive mode.

O. Off-line storage devices for operation or requirements for start-up are not allowed.

P. Program operation of system in solid-state non-vital memory.

Q. Design adjacent SVPs to communicate via dark fiber.

R. Ensure signals display a restricted aspect rather than being dark in the event of a failure of both normal and standby processors.

S. Design SVP logic to place track blocks between adjacent interlockings upon cold start.

T. SVP shall provide time stamp to signal equipment at each location including maintenance computers and event recorders to facilitate accurate event sequence reporting.

U. Signal Processor shall use Genisys protocol to talk to LCC in a manner compatible with the existing LCC to signal location interface. Use Genisys protocol time stamp from the Central Control Interface to synchronize the SVP time stamps.

V. Switch Locking: Vitally ensure that switches are locked even during a failure.

W. Provide a vital cutout relay if required.

X. SVP System Environmental Requirements:

1. Operating Temperature Range: Minus 40 degrees F to plus 160 degrees F.

2. Operating Humidity Range: 5 percent to 95 percent.

2.02 DUAL PROCESSORS

A. Design system to be fully redundant with automatic failover.

B. Redundant System Equipment: Including but not limited to SVP, dc power supplies, and modems for each serial port. For associated serial ports, redundancy may end at modems.

C. Design a function to perform manual transfer between SVPs.

D. Design system to automatically transfer to standby modem in the event of a communication failure. Vital communication between adjacent active SVPs shall be maintained via automatic processes. Design circuitry to prevent “hunting."

E. Design dual SVP system to function as a warm standby.

F. Warm Standby:

1. Provide automatic transfer from normal to standby SVP units in the event of a failure. Transfer from standby to normal shall be a maintainer selection using a momentary toggle switch.

2. Warm standby is only SVP logic and functions, relay circuits/functions do not need to be dual or normal and standby.

3. Indications shall be retained when transfers between normal and standby occur. Data for blocks and other safety critical functions shall be shared to both the normal and standby SVP.

4. Design system such that signals controlled by a transferring SVP shall be cancelled upon transfer.

5. Ensure no unsafe conditions result from transferring between SVPs.

6. Field equipment shall not be affected as a result of transferring between SVPs beyond necessary fail-safe reactions. TCS communications shall have no more than a temporary outage while transferring between SVPs.

7. Retain all Signal and Track Blocks applied when transfers between normal and standby occur.

2.03 PRINTED CIRCUIT BOARDS

A. Printed Circuit Boards (PCB): Plug-in type, housed within a card file or Circuit modules: enclosed form factor, replaceable. Hardware interface boards shall indicate status of each I/O. LEDs to indicate which I/O is activated.

B. Vital Input/ Output Boards:

1. Provide a sufficient number of PCBs in each SVP unit to accommodate vital hardwire inputs and outputs at the location.

2. Optically isolate inputs and output controls from power system internal to SVP unit.

3. Design I/O boards capable of controlling wayside devices, vital double break outputs, and other equipment from within signal room.

4. Design an I/O board able to directly control equipment with 110 Vac power.

5. Provide direct control of speed commands to track circuit transmitter.

6. Output Short: Capable of withstanding, without damage, shorting of output to opposite ac polarity, register short as an alarm.

7. Switch Machine Control: Driven via vital I/O board or vital relay.

8. Signal Control: Via vital relay only.

9. Spare I/O Capacity: Minimum 5 percent, and minimum two vital timers.

C. Non-Vital I/O Boards:

1. Design SVP units with non-vital input/output PCBs (NVI/NVO).

2. Design PCBs in SVP or PLC with serial RS232 link to SVP to accommodate non-vital hardwired inputs and outputs.

3. Spare I/O Points: Minimum 10 percent of total I/O points, Minimum of two of each type.

D. Expansion Boards:

1. Spare PCB Slots:

a. Minimum of 1 of each type per SVP.

b. At Terminal locations: minimum of 3 of each type per PCB SVP or minimum per modular PCB SVP or minimum 2 per modular SVP.

2.04 SVP PORTS

A. Design each SVP unit with vital and non-vital communications ports that interface with external devices and systems.

B. Vital Communication Ports:

1. Interfaces: SVPs within same location and at adjacent locations.

2. Port Type: RS232, RS485, RS422, or Ethernet.

3. The Contractor shall be allowed to propose Ethernet connections for vital communications only if his proposal can demonstrate:

a. Vitality of the failure modes meeting AREMA requirements

b. Redundancy of signal processor functions at each location is maintained.

c. Communication failure faults shall isolate such that communication between no more than two locations occurs.

C. Non-vital Communication Ports:

1. Interfaces: TCS system, SMC, portable maintenance computer, event recorder.

2. Port Type: RS232, RS485, RS422, or Ethernet.

3. TCS Connection: Ethernet or serial data with connection thru an Ethernet switch.

4. Data Transmission Rates: Independently adjustable.

D. Port Indicator Light:

1. Design for each Input, Output, and Input/ Output PCB port.

2. Ensure light is on when respective port is energized.

3. Position indicator such that it is visible when viewing status lamps.

2.05 HARDWIRE INPUTS/OUTPUTS

A. Ensure hardwire inputs of vital controllers do not respond to ac voltage levels.

B. Design biased hardwire inputs not to respond to voltage of improper polarity under failure condition.

C. Design hardwire outputs of vital controllers with security equal to or greater than conventional double-break relay circuits.

2.06 SVP DIAGNOSTICS

A. Equip SVPs with diagnostics easily accessible to the user. Quickly and reliably identify failed printed circuit boards. Indicate cause and specific location of failures.

B. Design system to allow complete maintenance on normal or standby SVP without effecting signal operation in the area.

C. Design system to allow local testing, and diagnostics using application dependent firmware development system, signal room computer, or a laptop computer.

D. A processor health alarm from both normal and standby shall be reported to Link Control Center (LCC) and Local Control Panel (LCP) regardless of which processor is in control.

2.07 KEYING METHOD

A. Design system with a hardware and firmware keying method.

B. Design keying method to prevent SVP from operating with application dependent firmware designed for other vital controllers.

C. Ensure incorrectly installed PCBs render vital controller inoperable.

D. Include keying arrangement of card file on signal room drawings at each location.

E. Display an error message if a card file is installed in an incorrect slot or location.

F. Key application dependent firmware to vital controller hardware rendering it impossible for application dependent firmware to be executed in a vital controller other than intended vital controller.

2.08 IDENTIFICATION

A. Design labeling system that is a part of unit to identify name of function associated with each I/O point.

B. Nomenclature:

1. As shown in the Contract Documents.

2. As defined for the existing ST installations.

3. As defined in the AREMA Communication and Signals Manual Part 16.1.1.

2.09 SVP EXECUTIVE FIRMWARE

A. Store executive instructions in solid-state memory and refer to them as executive firmware.

B. Fully integrate and execute system integrity functions with a single SVP. Continuously test system integrity functions and generate an alarm for a failure.

C. Cease data communications and remove power from hardwire outputs in a completely fail safe manner upon detection of a failure of a system integrity function.

D. Log vital and non-vital failures and identify faulty PCB or function. Supervise a closed loop monitoring system for hardwire input and output functions. Include checks to ensure independence of inputs from one another.

E. Continuously ensure control over state of the following: Hardware outputs, RAM, vital data communications, spontaneous change in application dependent firmware.

F. System Integrity Functions: Error logging, hardwire interface, timing, data communications, application logic execution, and application of power to vital controller.

2.10 APPLICATION DEPENDENT FIRMWARE

A. Store application dependent instructions in solid-state memory devices and refer to them as application dependent firmware.

B. Vital functions include, but are not limited to the following:

1. Route check.
2. Signal control.
3. Signal lighting.
4. Signal indication.
5. Overrun Detection
6. Approach locking.
7. Time Locking.
8. Detector locking.
9. Route locking.
10. Traffic locking.
11. Indication locking.
12. Switch control.
13. Switch indication.
14. Switch correspondence.
15. Broken rail protection.
16. Loss of shunt.
17. Signal blocking.
18. Track blocking.
19. Switch blocking.
20. Overlap Locking at terminals and stations.
21. Crossing warning functions.
22. Speed Command Selection including Temp Speed Controls
23. Data communication conditioning including building of repeaters.

C. Non-Vital Controls:

1. Route request including switch operation and signal operation. In yards, destination request via TWC or LCP.
2. Route cancellation.
3. Terminal mode operation logic

4. Snowmelter request logic

5. TWC logic (route and crossing start requests, route and crossing cancel requests)

6. Local control panel logic

7. Auxiliary functions.

D. Non-Vital Indications:

1. Signal or numerical sign (in yards) indication.

2. Switch position.

3. Switch locked/unlocked.

4. Route request/cancel.

5. Track occupancy.

6. Snowmelter indication.

7. Terminal mode indication.

8. Alarm and auxiliary status.

9. System failure indications including communication.

10. Crossing indications.

11. Security barrier status.

E. NVP Interfaces:

1. TCS: See Section 34 42 65 - Central Control Interface.

2. Signal Maintenance Computer (SMC).

3. Local Control Panels (LCP): See Section 34 42 69 - Local Control Panels.

F. Software Timers: Externally settable in the field, selectable by a means other than by modification to application software, retain timer settings through power outages.

G. Application dependent firmware must be replaceable without disturbing executive firmware.

2.11 APPLICATION DEPENDENT FIRMWARE DEVELOPMENT SYSTEM

A. Hardware and Software: Provide a laptop with the application development and testing system that is capable of composition, debugging, graphical simulation, and solid-state memory storage of application dependent firmware.

B. Testing Tool:

1. Capable of working with both vital and non-vital SVP software.

2. Limits re-testing of application firmware after software modifications have been performed.

3. Identifies revision level.

4. Reports differences between revision levels.

C. Design system to include a standard text editor or word processor.

D. Version: Latest edition available from manufacturer of SVP, capable of modifying all software installed by the Contractor.

E. No copy protection schemes are allowed on system software.

F. Demonstrate hardware and software supplied with development system is completely compatible.

G. Hardware:

1. PC or compatible.

2. Color LCD flat panel monitor, 17 inch minimum.

3. Solid-state memory programmer.

4. Minimum 250GB hard disk drive in accordance with latest industry standards and approved by Sound Transit.

5. Commercial off-the-shelf (COTS) hardware.

2.12 MEDIA CONVERTER

A. Input: Serial, RS-232/RS-422/RS-485.

B. Output: Optical, full-duplex/half-duplex.

C. Baud Rate: Minimum 500Kbps.

D. Automatic baud rate detection.

PART 3 - EXECUTION

3.01 INSTALLATION

A. Provide redundant, warm standby SVP system units for all locations that have CAB signaled track circuits and/or where signal logic is processed.

B. Provide media converters to connect adjacent SVPs using fiber.

C. Mount card files in standard 19 inch instrument racks.

D. Mount plug connectors, data transmission equipment, room computer, power supplies, power conditioning devices, terminal boards, wire connectors, and other equipment required to achieve a complete, stand-alone subsystem within a single instrument rack or on an adjacent rack with associated SVP units.

E. Mount card files and associated equipment in a manner that provides easy access to test points, indicators, and adjustments.

F. Mount SVP equipment between 1.5 feet and 5.5 feet above finished floor.

G. Mount SVP units to allow access from both front and rear.

3.02 IDENTIFICATION

A. Identify input and output ports on PCB by name assigned to the port in application firmware with a printed label.

B. Identify ports by slot and port numbers of PCB.

3.03 VARIABLE NOMENCLATURE

A. Variable nomenclature shall be the same as or match the nomenclature of the existing ST Link Signal System. The nomenclature of the existing system will be provided to the Contractor upon request.

END OF SECTION

SECTION 34 42 61

DC POWER SUPPLIES

PART 1 - GENERAL

1.01 SUMMARY

A. Section includes:

1. Requirements for the procurement, installation, and testing of DC power supplies.

1.02 REFERENCES

A. This Section incorporates by reference the latest revisions of the following documents:

1. National Fire Protection Association (NFPA):

a. NFPA 70 - National Electric Code (NEC).

1.03 SUBMITTALS

A. Product Data:

1. Description and/or catalog cut of proposed DC power supplies to be furnished including proven equipment history.

2. Include load calculations for each DC load in Section 34 42 35 - Signal Power Distribution System, as part of total power consumption calculation.

B. Testing Documents:

1. General: Submit DC power supply testing documents under this Section.

2. Certified Test Reports for factory testing.

PART 2 - PRODUCTS

2.01 DC POWER SUPPLIES

A. Mounting: Rack mountable.

B. Input Voltage Range: Between zero to 115 percent of rated voltage.

C. Housing: Panel-chassis combination with a perforated protective cover.

D. Environment: Zero degrees to 130 degrees F.

E. Outputs: One ammeter, one voltmeter, accessible on front panel.

F. Meter Accuracy: Plus, or minus 2 percent with nominal voltage readings at center scale.

G. Terminal Posts: Input, output, and alarm circuits, insulated from frame.

2.02 GROUND DETECTORS

A. Leakage Current Detection: From either terminal of floating supply to ground, shorting or opening of a component part shall be detectable.

B. Leakage Path Resistance: Maximum 20,000 ohms.

C. Immune to the following:

1. Transient current flows that may be the result of charging distributed supply-to-ground capacitances.

2. Induced power line ripple which may exist between supply leads and ground.

D. Memory: Provide an indication of a momentary leakage condition, hold indication until reset button is pushed.

E. Ground Detector Circuits: Meet fail-safe design criteria with respect to open circuits.

F. Environmental: Operates in a stable condition over specified temperature and voltage ranges specified for each power supply being monitored.

G. Test Button: Starts the device self-test.

H. Reset Button: Manual pushbutton that resets alarms.

I. Indication Lights:

1. Type: LED.

2. Provide one green light (operation LED) to indicate ground detector is on.

3. Provide three yellow lights: one for service, when there is either a device fault or a connection fault, or when the device is in maintenance mode; two for alarms, one for each bus, to indicate that a ground has occurred on that bus.

PART 3 - EXECUTION

3.01 INSTALLATION

A. General:

1. Provide electrical connection from power sources to associated DC power supply equipment, in accordance with NEC.

2. Provide DC regulated power supplies of each voltage necessary for Signal System equipment.

B. DC Power Supplies:

1. Provide redundant DC power supplies for signal processors, relays, and circuits leaving the room.

2. Provide alarm contacts to indicate DC power supply failure.

3. Wire contacts of DC power supply alarms to non-vital processor for indications on signal maintenance computer (SMC) and inclusion in summary “power equipment failure” alarm to Link Control Center (LCC).

4. Isolate power supply output from ground; do not ground positive or negative output terminals.

C. Ground Detectors:

1. Provide ground detection for any ungrounded system.

2. Design test switch to check operation of that detector, by providing momentary 20,000 ohm-to-ground leakage paths for DC buses being monitored.

3. Factory wire and mount ground detectors in relay racks.

4. Operation shall not interfere with operation of power or signal circuits or equipment.

5. Provide one independent isolated contact for remote indication of alarm condition.

6. Install ground in ground detecting part of circuits.

7. Check test ground versus prime ground for continuity.

END OF SECTION

SECTION 34 42 65

CENTRAL CONTROL INTERFACE

PART 1 - GENERAL

1.01 SUMMARY

A. Section includes:

1. Requirements for the design, procurement, and installation of interface protocols, between SCADA subsystem Train Control System (TCS) and Signal Vital Processor (SVP) controls and indications.

1.02 SUBMITTALS

A. Shop Drawings:

1. Installation Drawings: Show block diagram and circuit details of devices and cables used for interconnection of TCS equipment with SVP and Train to Wayside (TWC) interrogator (INT).

B. Product Data:

1. Description and catalog cut of proposed equipment for connections between rail systems devices and TCS devices.

2. Complete technical data verifying that system proposed is in compliance with requirements of this Section.

3. List of data input and output points from SVP, Train to Wayside Communication (TWC) Interrogator (INT), and TCS.

4. TCS Points List::

a. Submit the code chart that will be included in the Book of Plan in the 8 bit format shown in the IFC Drawings

b. Submit in format approved by Sound Transit.

PART 2 - PRODUCTS

2.01 TCS CONTROLS TO SIGNAL PROCESSOR

A. Design control requests not to be retransmitted by TCS but remembered by signal logic until either TCS interface cancels control request or until appropriate wayside conditions demonstrate that control request is satisfied.

B. Control functions are described herein in a binary method as follows:

1. Zero equals no control action (equivalent of request relay contact open).

2. One equals request control action (equivalent to request relay contact closed).

C. Terminal Mode:

1. One equals request to select each terminal operating mode at signal in normal direction approach to a temporary or permanent terminal with more than one turn back track. Signal can only be in one mode.

2. One Equals Control for Each Terminal Mode:

a. Mode 1 (TM1Z): Automatic route selection to either track for incoming trains, the diverging route being preferred route.

b. Mode 2 (TM2Z): Automatic route selection to diverging track only into terminal station.

c. Mode 3 (TM3Z): Automatic route selection to normal track into terminal station.

d. Manual Mode (MMZ): Manual - No automatic routing.

D. Controls from TCS must have no effect unless interlocking is placed in “CENTRAL” MODE, except where indicated as having effect when in other modes.

E. Route requests from TCS to the non-vital processor (NVP) must be an interactive process of three steps consisting of entrance selection (control), exit available (indication), and exit selection (control) as follows. Process shall be identical for each signal and route.

2.02 SIGNAL PROCESSOR CONTROL FUNCTIONS

A. Controls shall be available in the NVP for request from TCS.

B. Signal Cancel (CANZ):

1. One equals request to cancel a cleared signal.

2. Provide one control for each signal.

3. Cancels any entrance route request control pending operation by the signal logic.

4. If automatic routing capability exists, canceling a cleared signal must cause SVP logic to inhibit any automatic routes from re-initiating until there is no train in signal approach or until a train accepts an alternate route.

5. Canceling a signal must also cancel fleeting associated with that signal.

C. Entrance Selection (PBZ):

1. One equals request to select the entrance signal of a route across an interlocking.

2. Non-vital signal logic shall permit only one route selection process per interlocking at a time.

3. Selection of an entrance shall be followed by selection of an exit.

4. Non-vital signal logic must ignore any attempts to select a second entrance.

5. Entrance command shall be remembered by non-vital signal logic until one of the following conditions is met:

a. Signal cancel control is sent.

b. 45 seconds have passed without selection of a valid exit.

c. Valid exit has been selected and entrance signal indicates a proceed condition.

D. Exit Selected (EXZ): One equals request to select signal as an interlocking exit point for the route.

E. Fleeting Request (FLZ):

1. One equals request to fleet each interlocking signal.

2. Does not apply to non-interlocking signals.

3. Non-vital signal logic automatically re-initiates same route for that signal as soon as field conditions permit.

4. Control shall only act to re-clear a route and shall not by itself initiate first route request.

5. Fleeting is normal operating condition for signals at emergency crossovers.

6. One control for each signal.

F. Fleeting Cancel (FLCZ): One equals request to cancel fleeting for that signal. Must not cancel a route request in process or a cleared route. One control for each signal equipped for fleeting.

G. Switch Block (WBLKZ): One equals request to inhibit request of switch movement. Separate block for each switch or switch pair. Condition shall be remembered when interlocking is put into “AUTO” mode. In interlocking “AUTO” mode, control shall inhibit auto routing requests that attempt to change switch position.

H. Switch Block Cancel (WBLKCZ): One equals request to cancel the switch block. One control for each switch or switch pair.

I. Switch Normal Call (NWZ): One equals request to call switch normal. Provide one control for each switch or crossover track switch pair controlled as a single switch.

J. Switch Reverse Call (RWZ): One equals request to call switch reverse. Provide one control for each switch or crossover track switch pair controlled as a single switch.

K. Switch Cancel Call (CWZ): One equals request to cancel switch call. Provide one control for each switch or crossover track switch pair controlled as a single switch.

L. Local Panel Control (LOCZ): One equals request to transfer interlocking control from Central Control (or auto mode) to local control panel after local control panel sends an indication (LOK) asking for control of an interlocking.

M. Emergency Local Control (ELCZ): One equals transfer interlocking control from Central Control to local control panel without requesting control of the interlocking.

N. Central Control (LCCZ): One equals transfer control from automatic to TCS such that LCC can control interlocking functions.

O. Automatic Mode (AMZ): One equals transfer control of the interlocking where route requests come from automatic and TWC. In this mode neither local control panel nor TCS are able to perform routing functions in the signal logic. Absence of an LCCZ =1 request, for more than 30 seconds must result in interlocking being placed into “Automatic Mode”.

P. Train Dispatch (TDZ):

1. One equals request to start the train dispatch signal sequence.

2. TCS must only send this control at a predetermined time (site specific) before the dispatch time of the Link Control Center (LCC) selected operating schedule.

3. LCC shall send command only if interlocking is in automatic mode, track circuit is occupied, TWC message matches schedule, and signal is not already cleared.

4. Control shall cause amber bar to flash on signal corresponding to track that LRV is being dispatched from.

5. One control for each terminal track circuit.

6. Non-vital signal logic shall automatically cancel control after time expires.

Q. Signal Block Request (GBLKZ): One equals request to block an interlocking or intermediate signal. Request for a signal block condition at the field signal logic shall automatically cause a cancel of any cleared route at that signal.

R. Signal Block Cancel (GBLKCZ): One equals request to cancel a signal block condition in the non-vital signal logic.

S. Track Block (TBLKZ): One equals request to apply a track block to a track segment between interlockings. Tail track may also be track blocked.

T. Track Block Cancel (TBLKCZ): One equals request to remove the track block condition. NVP logic shall communicate the condition of a track block between adjacent interlocking processors and the block shall not be considered removed until it is canceled at both locations.

U. Snow Melter System (SMZ): One equals request to turn on snow melter system.

2.03 SIGNAL PROCESSOR INDICATIONS

A. Indications sent to TCS include the following functions. Indications to TCS must continue even when in local control:

1. 1= (one equals) indication is true as described below.

2. 0 = (zero equals) other conditions.

B. Signal Clear (GK): One equals signal cleared. One indication for each signal.

C. Signal Overrun (GORK): One equals an occupancy of a track circuit beyond a signal at stop that indicates that a train passed a signal at stop. One indication for each signal. The indication shall be recorded and shall remain at one until the track circuit beyond the signal at stop is unoccupied.

D. Exit Available (EXK): One equals exit from that entrance is available when entrance route request has been received in the non-vital signal logic:

1. One indication for each route.

2. One equals an indication to TCS that signal is available to be selected as an exit for the entrance selected.

3. Non-vital signal logic shall perform logic tests as defined in the Route and Aspect Charts so that selection of this exit will allow the vital logic to clear the route.

4. Non-Vital Logic Tests shall include the following conditions:

a. Switch position available.

b. Opposing traffic circuit locking in the exit block.

c. Track circuit occupancies.

d. Track blocks.

e. Opposing routes.

E. Signal Fleeted Indication (FLK): One equals when that signal is fleeted. One indication for each signal capable of being selected for fleeting.

F. Signal Block (GBLK): One equals when that signal block condition exists.

G. Switch Normal Correspondence (NWCK): One equals switch in normal position and in correspondence. One indication for each switch or crossover pair.

H. Switch Reverse Correspondence (RWCK): One equals switch in reverse position and in correspondence. One indication for each switch or crossover pair.

I. Switch Lock (LK): One equals switch locked. One indication for each switch or crossover pair.

J. Route Lock (RLK): One equals route lock in effect across an interlocking segment. Provide one indication for each direction for each interlocking segment.

K. Traffic Normal (NFK): One equals traffic aligned in normal direction. One indication for each traffic section.

L. Traffic Reverse (RFK): One equals traffic aligned in reverse direction. One indication for each traffic section.

M. Traffic Locked (FLK): One equals traffic locked in a direction, do to Route Locking or occupancy of the route. One indication for all normal and reverse routes.

N. Track Occupied (TK): One equals track circuit is occupied. One indication for each track circuit, including any B point type receivers or overlay track circuits.

O. Terminal Mode (TM1K, TM2K, TM3K, TM4K): One equals terminal mode selected. One indication for each terminal mode for each signal with terminal mode operation.

P. Switch Block Indication (WBLK): One equals switch block condition exists.

Q. Local Control (LOK): One equals an electronic request from the local control panel to central control for local control.

R. Local Control Mode Indication (LCK):

1. One equals local control panel in local control mode.

2. Local Mode: Indicates on LCC signal room icon as "L".

S. Automatic Mode Indication (AMK):

1. One equals interlocking placed in automatic mode.

2. Automatic Mode: Indicates on LCC signal room icon as "A".

T. LCC Control Mode Indication (CCK):

1. One equals TCS “central” has control of interlocking functions and that the local panel and automatic route requests are inhibited.

2. Central Mode: Indicates on LCC signal room icon as “C”.

U. Emergency Local Control Indication (ELCK): One equals local control panel in local control by use of emergency bypass without agreement from TCS.

V. Microprocessor Failure Alarm (MPAK): One equals processor self-diagnostic system detection of internal error from the processor. Summary indication for health alarm of any processor.

W. Ac Power Off Indication (ACPOK): One equals ac power lost to location. One indication for each room.

X. Dc Power Off Indication (DCPOK): One equals rectifier output lost. Provide one indication for each signal room. Indication shall be a summary alarm of all rectifiers in the room and include any UPS failures.

Y. Dc Ground Summary Alarm Indication (DCGK): One equals one or more ground detector in a particular signal room detects a ground condition.

Z. Track Block Indication (TBLK):

1. One equals track block applied to a track segment between interlockings.

2. Condition shall be reported from the processor of both interlockings.

3. In order for a local control panel to remove a track block, communications between processors at both interlockings must indicate that the track block has been removed.

AA. Crossing Activated (XRK): One equals crossing is activated and crossing relay (XR) is down.

BB. Crossing Gate Down Alarm (GDAK): One equals crossing time that a down crossing gate has exceeded a pre-set time interval. One indication for each crossing location. The time interval shall be adjustable from 4 to 12 minutes, initially set to 6 minutes.

CC. Crossing Bypass Indication (XBYPK): One equals crossing in bypass. One indication for each crossing location.

DD. Traffic Loop Occupied while Crossing Activated Indication (XTLOK): One equals traffic loop occupied while crossing activated and no train on crossing. One indication for each crossing

EE. Snow Melting System Activated Indication (SMSAK): One equals snow melting system activated.

FF. Tunnel Slow Speed Alarm Indication (TSSAK): One equals tunnel slow speed alarm active.

GG. The mainline signal house interfaces to the Yard Signal System for yard entrance track circuit occupancy, traffic direction and lock, and numerical sign status shall be shown on the mainline signal house LCP and SCADA indications.

PART 3 - EXECUTION

3.01 TCS INTERFACES

A. For additional TCS requirements and functions shall be in coordination with TCS SCADA.

B. Signal Vital Processor:

1. Provide serial data interface in Genisys protocol to TCS as shown on IFC Drawings.

2. Provide read/write addresses of data for each SVP and code charts identifying format and meaning of each bit.

3. TCS controls and indications added under this Contract shall operate and indicate through the LCC operator screens in a manner consistent with existing controls and indications.

4. Coordinate TCS controls and indications with Communications & SCADA.

5. Allow SVP to receive clock synchronization from TCS server master clock.

C. TWC Interrogator: Provide serial data interface to TCS as shown on IFC Drawings. Provide read/write addresses of data for each interrogator and code charts identifying format and meaning of each bit.

D. Use Genisys protocol time stamp from Central Control to synchronize the SVP time stamps.

END OF SECTION

SECTION 34 42 69

LOCAL CONTROL PANEL

PART 1 - GENERAL

1.01 SUMMARY

A. Section includes:

1. Requirements for the design, procurement, installation, and testing of Local Control Panels.

1.02 REFERENCES

A. Abbreviations or acronyms:

1. LCP: Local Control Panel.

2. SVP: Signal Vital Processor.

3. SMC: Signal Maintenance Computer.

4. TWC: Train-to-Wayside Communications.

1.03 SUBMITTALS

A. Prototype LCP Screen Display: Show placement and representation of switches, signals, buttons, alarms, indication icons and other items that will be a part of LCP. Indicate if a scroll feature is necessary to view entire LCP graphics.

B. Live LCP Demonstration: Sound Transit will be able to operate LCP as though it were actually working in the field. Sound Transit will provide comments based upon this demonstration. Incorporate Sound Transit's comments and submit with final design. Use typical panel as basis for design of other LCPs.

C. Testing Documents:

1. General: Submit documents in accordance with Section 01 95 00 - System Integration Requirements and Section 34 42 98 - Signals System Testing. Submit LCP testing documents under Section 34 42 98 - Signals System Testing.

2. Source Quality Control: See Section 34 42 98 - Signals System Testing.

a. Test Program Plan for factory testing. Submit concurrently with factory test of Signal Vital Processor (SVP) logic.

b. Test Procedures and Test Results for each factory test.

c. Certified Test Reports for factory testing.

3. Field Quality Control: See Section 34 42 98 Signals System Testing.

a. Test Program Plan for field testing.

b. Test Procedures and Test Results for each field test.

c. Certified Test Reports for field testing.

D. Product Data:

1. Product data for Signal Maintenance Computer (SMC), portable Maintenance Computer and testing equipment.

2. Catalog cut of proposed hardware and software to be used for Signal Maintenance Computer and portable Maintenance Computer. Submit manuals for applications stored on each computer. Provide any software licenses required for operation.

PART 2 - PRODUCTS

2.01 PERFORMANCE/DESIGN CRITERIA:

A. Local Control Panels:

1. Design LCPs capable of requesting/controlling wayside signal equipment. Design software package and test procedures to provide required LCP functionality.

2. Any signal device that can be controlled via Train to Wayside Communications (TWC) request or Train Control System (TCS) shall be able to be controlled by a LCP.

3. Design LCP to use same graphics, icons, and functions as existing Sound Transit LCP screens as shown on Contract Drawings. Ensure symbols are not too crowded to be seen and text fonts are readable.

B. Software:

1. Approved Application: Approved application LCP software system will not be approved by ST until after review of prototype and live demonstration.

2. Operating System: Microsoft Windows; current version at time of installation.

C. Panel Indicators:

1. Indication Icons: Icons shall be circles unless representing field equipment as shown on Contract Drawings, field equipment icons shall display the equipment number.

D. Track Circuits:

1. Color: Red if occupied, white if unoccupied, blue if blocked.

2. Show indications for track circuits and track repeaters that are in that house.

3. Route Selection:

a. A special application of interlocking track circuit indications.

b. Unoccupied: White indication; normal condition.

c. Entrance/Exit Track Circuits: Subdivided into smaller sections, green when an entrance or exit is selected.

d. Route Lined – Unoccupied: Track sections entire route lit green.

e. Route Lined – Occupied: Track sections in route occupied by Light Rail Vehicle (LRV) lit red.

f. Route Lined – LRV Cleared: White track sections after LRV has passed.

E. Switches:

1. Switch Request: Icon above normal and reverse switch request control icons, normally grey, normal request lights green, reverse request lights yellow.

2. Switch Position.

3. Solid track section in direction of switch position, open in opposite direction.

4. Switch Throw Request: Show previous position clear, requested position must flash; new position becomes solid upon switch correspondence.

5. If there is no switch indication (neither NWK and RWK are up) both switch indications must flash.

6. Switch Lock: Switch icon near switch location, normally grey, red inscribed with “LK” when switch is electrically locked.

F. Interlocking Signals:

1. LRV Signal Icon:

a. Stop Signal: Solid amber bar perpendicular to track. Normal state.

b. Stop Signal Running Time (Associated ASR is Down): Flashing amber bar perpendicular to track.

c. Proceed Signal: Solid white bar parallel to track.

d. Diverging Signal: Solid slanted white bar in direction of route.

G. Traffic:

1. Indicate current direction of traffic between panel location and the two adjacent locations.

2. Traffic Icons: Eight arrows, two above and two below end of each track in each direction.

3. Direction of Traffic: Green arrow if traffic is unlocked and can be reversed, red if traffic is locked.

4. Opposite Direction of Traffic: Dark arrow.

5. Default Display: Four traffic green colored arrows.

6. Non-interlocking location Display: Four traffic green, red, or dark colored arrows.

7. For segments between interlockings within the same location, route stick logic may be substituted for traffic circuit logic.

H. Operations Mode:

1. Modes: Local, automatic, remote.

2. Mode Icons: One for each mode, default color gray, active mode displays red.

I. Communications Status:

1. Communications Link: Green if normal, red if there is a fault on any of the processor serial ports.

2. Modem Health: Icon for each adjacent location, green if normal, red if there is a loss of communication to the adjacent SVP.

3. SVP Active: One icon for normal and one icon for standby, green in control, grey if not.

4. SVP Fault: MPAK icons, icons shall display for a fault for either the normal or standby processor.

5. Dc Power Off: One icon at top of panel, green if normal red if any of the DC power supplies or UPS at the location contains a fault.

6. Ground Fault: One icon at top of panel, red if any of the detectors in fault, green if normal.

J. Terminal Mode: One icon for each mode, gray if not active, active mode displays green for mode selected.

K. Indications Active: All panel indications active no matter panel mode of operation.

L. Switch Heater System Energized: Snow flake icon, gray if no switch heaters elements energized, blue if any heater element at the location is energized.

M. Snow Melter System Status:

1. Yellow snow flake icon if snow melter system is requested but conditions are not met to turn on heating elements. Icon shall turn gray if snow melter system is turned off or red in a fault mode.

2. Icon shall turn blue if any of the heating elements are energized.

2.02 PANEL CONTROLS

A. Control Icons: Icons shall be square or rectangular, inscribed with letters where shown on Contract Drawings.

B. Operations:

1. Design each control to have an associated icon.

2. Select icons by pointing and clicking mouse.

3. Controls except “Local Request” and “Emergency Local” are ignored unless location is in “Local” mode as evidenced by “Local” icon being red.

4. Automatically ignore pending controls from LCP if Local Control mode has not been established.

C. Master Cancel:

1. Normal display is gray inscribed with “Master Cancel Off”.

2. Click icon to activate. Activated icon displays red inscribed with “Master Cancel On”.

3. Clicking Master Cancel icon again will turn it off.

4. Activation of Master Cancel enables pointer to select control function to be cancelled.

D. Signal Fleeting:

1. Momentary icon inscribed with “F”.

2. Initiate by first clearing a signal and then depressing its associated fleet icon.

3. Provide each signal an associated fleet icon adjacent to each interlocking signal.

4. Default icon color is grey, display blue when fleeted.

E. Signal Blocked:

1. Momentary icon inscribed with “B”.

2. Provide one for each controlled signal.

3. Default icon color is grey, display blue when blocked.

F. Switch Request:

1. Three momentary icons for each switch, one to call switch normal, one to call switch reverse, and one for neutral position.

2. Center Position Button: Cancels normal and reverse auxiliary switch requests.

3. Normal and Reverse Buttons: Lines switches for normal or reverse routes.

4. Default Selection: Center position releases switch to LCP NX, LCC NX, or Auto route requests.

5. Design switch request icon corresponding to last position requested to remain lit.

G. Switch Block:

1. Toggle icon inscribed with “B”, default color is gray, display blue when blocked.

2. Prevents a switch from being thrown, applies or removes block.

H. Track Block:

1. Track Block Icon: Toggle icon, places or removes track block, default color is gray, display blue when blocked.

2. Track Block Function: Prevents signals from being cleared into a particular track or particular route, applies to exiting track circuits at interlockings.

3. When track is blocked display “BLOCKED” above adjacent track circuit in blue. When track is blocked from adjacent location, display “FROM ADJACENT” above adjacent track circuit in blue.

4. In the event that a section of track has been blocked between two interlockings, each interlocking must remove block via Local or Central mode on section of track under his control in order to clear routes into that section of track.

I. Local Request: Momentary icon, requests Local Control of interlocking, default color is gray, display green when activated.

J. Emergency Local: Momentary icon, takes Local Control of interlocking, default color is gray with red border, displays red when in emergency local.

K. Local Off: Momentary icon, cancels Local Control of interlocking, default color is gray, display green when clicked.

L. Terminal Mode: Momentary icon, provide one for each mode; default color is gray, display green when mode is chosen.

M. Route Selection: Icon toggle requests a route entrance or exit.

N. Entrance/Exit Procedure:

1. Select an entrance by clicking a Route Selection icon. Display a green triangle adjacent to the entrance signal. Display a white triangle adjacent to the available exit signals.

2. If traffic is currently locked against a certain route, that exit shall not indicate as an available exit.

3. Exits prevented due to other types of blocks or locks shall not indicate as available.

4. If traffic is lined against a certain route, and a completed route request would be expected to change traffic, that exit shall indicate an available exit.

5. Select desired exit by clicking a Route Selection icon associated with an available exit signal. Exits not selected clear. Route selected displays green triangle adjacent to selected exit signal.

6. Track circuit indications follow route selection procedure once exit has been selected.

7. Entrance selected clears in 45 seconds if no exit is selected.

8. If train is on approach and signal is cancelled, signal cannot be recleared for approach stick time.

O. Other Icons: Capable of controlling other site specific functions of signal equipment at that location, including but not limited to, terminal mode selection.

2.03 SOURCE QUALITY CONTROL

A. Factory Design Test:

1. Design a comprehensive test of LCP functions.

2. Exercise routes, demonstrate cancel of routes, auxiliary switch controls and indications, alarms, health status indications, simulated interface with LCC to change control modes, track, signal and switch blocks, and display and control of automatic routing functions.

2.04 SIGNAL MAINTENANCE COMPUTER (SMC)

A. Provide a computer system capable of interfacing to and troubleshooting TWC equipment, event recorders, a laptop computer, UPS, and SVP system at each signal equipment room.

B. Ensure it shall not be possible to alter either vital or non-vital application logic using SMC.

C. Functions to be handled by this computer include but are not limited to:

1. Local Control Panel: In place of a standard etched aluminum or mosaic tile local control panel, in accordance with this Section.

2. SVP Diagnostic Tool: Normally associated with SVP systems (both vital and non-vital), provides access to diagnostic, status, and troubleshooting information (i.e., real-time statuses of logic bits from the SVP). Install any serial communication software (e.g., PuTTY) needed to view bit statuses live.

3. UPS Diagnostic Tool:

   a. Model: Eaton LanSafe Power Management Software or approved equal.

   b. Software provided by UPS manufacturer to aid UPS management. Software must monitor event history and provide real time power characteristics.

4. TWC Interrogator: Software capable of monitoring and observing TWC performance and reprogramming TWC interrogator.

D. Design layout to supply SMC and peripherals with forced-air ventilation.

E. SMC and Peripherals: Hardened for industrial environment, rack mounted, provide SMC complete with:

1. Optical mouse, sealed industrial keyboard, and keyboard drawer.

2. Keyboard Drawer: Room to house keyboard, space for mouse use.

3. Flat-panel display with minimum viewing area of 17-inches measured diagonally. This may be fold-down stowable unit.

4. Storage: 160GB hard drive, minimum.

5. Random Access Memory (RAM): Minimum 4G.

6. 10/100 Ethernet port.

7. Two unused USB ports.

8. One unused RS-232 serial port.

9. Operating system and Microsoft Office application software.

F. Provide permanent connections between SMC and systems it is designed to interface with. Use of AB switches or other hardware devices to perform required interfaces is allowed.

G. Provide latest and fastest version industry-standard, commercially-available central processing unit (CPU) that has been available for a minimum of four months through multiple resellers or distributor and has been in use for general production by two of the top five computer manufacturers.

H. Provide software based LCP application on each SMC.

I. Electronic version of the manuals, logic files, and as-in-service Book of Plans loaded onto each SMC.

PART 3 - EXECUTION

3.01 MOUNTING

A. Mount computer in a rack as shown on the signal room or signal house layout drawing. Mount at a height accessible from a sitting position.

B. Mount SMC monitor and keyboard drawer at height to permit seated operator comfortably use mouse, sealed keyboard, and view monitor.

END OF SECTION

SECTION 34 42 72

EVENT RECORDERS

PART 1 - GENERAL

1.01 SUMMARY

A. Section includes:

1. Requirements for the procurement, installation, and testing of event recorders.

1.02 SUBMITTALS

A. Product Data:

1. Description and catalog cut of proposed event recorder to be furnished including proven equipment history.

2. Specifications for data communications protocol, data storage format, and other software and firmware to be provided.

B. Capacity analyses demonstrating capability of meeting data storage requirements.

C. Shop Drawings: Typical event recorder circuits, drawings, and installation plans.

D. Testing Documents:

1. General: Submit documents in accordance with Section 01 95 00 - System Testing Requirements. Submit event recorder testing documents under this Section.

2. Source Quality Control:

a. Test Program Plan for factory testing.

b. Test Procedures and Test Results for each factory test.

c. Certified Test Reports for factory testing.

3. Field Quality Control:

a. Test Program Plan for field testing.

b. Test Procedures and Test Results for each field test.

c. Certified Test Reports for field testing.

PART 2 - PRODUCTS

2.01 SYSTEM REQUIREMENTS

A. For purposes of estimating, assume that there are 150 LRT movements in each direction in a 24 hour period.

B. Event Recorders: Shall be provided by a single manufacturer, independent of other equipment.

C. Identification Data: Shall include signal room where event recorder is located, event recorder number if more than one per signal room, microprocessor in control.

D. Include event recorder identification data with data transmissions to other devices.

E. Recorder Data Shall Be Sufficient to Allow Maintenance Personnel to:

1. Identify hardware and software.

2. Determine cause of signal system failures.

3. Determine events and procedures used during train movements.

4. Troubleshoot equipment during testing.

F. Design a time stamp, automatically updated by the signal vital processor that allows maintainers to determine event order regardless of which microprocessor the event occurred in, if multiple microprocessors are used. Include time stamp in printable record.

2.02 EVENT RECORDER

A. Capacity: Capable of recording 72 hours of normal operations.

B. Spare Capacity: 50 percent spare without overwriting.

C. Recorded Events:

1. Track Circuit Occupancy (for each track circuit with a track relay or track repeater relay function in the same equipment room).

2. Switch Position (Normal/Reverse).

3. Switch Locking.

4. Signal and Route Requests.

5. Signal Aspect (Clear/Stop). Include signal aspects for all signals controlled from that signal room, or that affect speed command selection in that room.

6. Traffic Direction, Traffic Locking, and Traffic Calls.

7. Power Equipment Alarms.

8. Power (On/Off).

9. Control Mode (Local/Remote/Automatic).

10. Health Alarms of Subsystems such as Microprocessor, Interface Loss of Communication, or Slave Processor failure.

11. Signal, switch, and track blocks.

12. Cab signal output for each track circuit, cab enabled, status of reduced speed selection, and code rate.

13. Change of variable timer settings.

14. Signal overrun alarm.

15. Gate up/down indications and Crossing Activation bits. Include Approach, Pre-emption, Advanced Approach, LRT2, Directional Sticks and all bits related to crossing activation.

16. Communication status with adjacent Signal House.

D. Information Recorded for Each Event:

1. Date.

2. Time: Hour, minute, and second.

3. Output Device.

4. Output Device Status.

PART 3 - EXECUTION

3.01 INSTALLATION

A. Provide an event recorder at each signal room to monitor signal functionality at that location.

B. Install event recorders in accordance with manufacturer's recommendations.

C. Provide plug-coupled interface wiring to facilitate replacement of event recorder equipment with minimal rewiring.

D. Provide event recorder capability to receive and log data from every signal processor at the location. Logging system shall allow determination of which processor the data derived from and which processor is in control.

E. Provide automatic back up of stored data to signal maintenance computer (SMC).

F. Provide network interface for remote data retrieval.

G. Provide data recovery capability using either SMC or portable laptop computers provided under Section 34 42 59 - Signal Vital Processor.

3.02 SOURCE QUALITY CONTROL

A. Tests and Inspections: Perform factory production tests in accordance with approved Factory Production Test Procedure.

3.03 FIELD QUALITY CONTROL

A. Field Tests and Inspections: Perform field inspection and installation tests in accordance with approved Field Inspection and Installation Test Procedure.

END OF SECTION

SECTION 34 42 93

ELECTROMAGNETIC COMPATIBILITY

PART 1 - GENERAL

1.01 SUMMARY

A. Section includes:

1. Requirements for the design, procurement, and installation to assure electromagnetic compatibility (EMC).

1.02 REFERENCES

A. This Section incorporates by reference the latest revisions of the following documents:

1. The American Public Transportation Association (APTA):

a. APTA SS-E-010-98 – Standard for the Development of an Electromagnetic Compatibility Plan.

2. Federal Transportation Administration (FTA)

a. UMTA-MA-06-0153-85-6 – Conductive Interference in Rapid Transit Signaling Systems, Vol. 2: Suggested Test Procedures.

b. UMTA-MA-06-0153-85-8 – Inductive Interference in Rapid Transit Signaling Systems, Vol. 2: Suggested Test Procedures.

c. UMTA-MA-06-0153-85-10 – Radiated Interference in Rapid Transit Systems, Vol 1: Theory and Data.

d. UMTA-MA-06-0153-85-11 – Radiated Interference in Rapid Transit Systems, Vol 2: Suggested Test Procedures.

3. Military Specification (MIL)

a. MID-STD-461A – Electromagnetic Interference Characteristics Requirements for Equipment, 1 Aug 1968.

4. Society of Automotive Engineers (SAE)

a. SAE ARP 1393 – EMC and Interference Control for Rapid Transit Vehicles

1.03 COORDINATION

A. Reduce susceptibility of or provide additional protection for signal equipment, if necessary, to prevent electromagnetic interference (EMI) from affecting operation of Signal System.

B. Work jointly with Sound Transit and others, designated by Sound Transit, to ensure compatibility among Signal System, LRVs, utility power lines, and other sources of electromagnetic interference.

1.04 SUBMITTALS

A. EMC Control Plan.

B. EMI Susceptibility Data.

C. EMC Control Data.

D. Testing Documents:

1. General: Submit documents in accordance with Section 01 95 00 - System Integration Requirements.

2. EMC Test Program Plan.

3. EMC Certified Test Report.

E. Field Quality: Test Procedures and Test Results for each field test.

PART 2 - PRODUCTS

2.01 PERFORMANCE REQUIREMENTS

A. Design:

1. Ensure compatibility of Signal System and its elements with electrical environment, considering vehicles, traction power distribution system, and other sources of induced, conducted, and radiated interference.

2. Maximize electromagnetic interference rejection by Signal System in order to avoid both safety related and operational effects from such interference.

3. Interference sources include traction electrification system, LRV's propulsion and internal power equipment, and various non-LRT wayside sources.

B. Electromagnetic Interference and Compatibility:

1. Design and construct Signal System such that its equipment is not susceptible to and does not electrically interfere with safe and proper operation of LRVs or wayside equipment.

2. Design Signal System not to be susceptible to interference from LRVs variable frequency AC motor propulsion system.

3. Provide appropriate arresters, equalizers, and surge suppressors.

C. Emission Limits:

1. Radiated:

a. LRV radiated emissions, as measured by procedures from UMTA-MA-06-0153-85-11 conform to the following limits:

1) From 0.01 MHz to 30 MHz, maximum permissible interference limit do not exceed 20 dB above limit of Figure 22 (RE05) of MIL-STD-461A.

2) From 30 MHz to 88 MHz, maximum permissible interference limit is 58 dB above one μV/m/MHz bandwidth.

3) From 88 MHz to 3000 MHz, maximum permissible interference limit is 68 dB above one μV/m/MHz bandwidth.

4) These limits must not be exceeded when measured at a distance of 100 feet from track centerline and shall conform to SAE ARP 1393.

2. Conductive:

a. Conductive LRV emissions, as measured by procedures of UMTA-MA-06-0153-85-6, Method RT/CE02A, have a current limit (amperes rms) defined as follows:

1) From 0 Hz to 320, 1 A maximum.

2) Above 320 Hz, emissions limit then follows a smooth curve through 10 A at 320 Hz, 0.08 A at 2 kHz, 0.016 A at 4 kHz and 0.0046 A at 7 kHz.

3. Inductive:

a. Inductive emissions from LRVs, as measured by procedures of UMTA-MA-06-0153-85-8, Method RT/IEO1A, are a maximum of 20 mV, rms, rail-to-rail, at frequencies between 20 Hz and 20 kHz.

b. This condition shall be met by each individual piece of power equipment as well as simultaneous operation of equipment.

2.02 LRV AND TRACTION POWER EMISSIONS:

A. At locations four selected by Sound Transit along mainline tracks.

B. Plans and reports:

1. Plans and Reports are the method by which Contractor informs Resident Engineer of system compatibility. Plans and reports must be in accordance with APTA SS-E-010-98.

C. EMC Control Plan:

1. Describe methods for ensuring electromagnetic compatibility between Signal System and other sources of electromagnetic interference.

2. In this document, describe Contractor's plan for:

a. Obtaining susceptibility data. Review Sound Transit furnished LRV EMI/EMC data for compatibility with signal system. This data does not cover every EMI source or sensitive device. The Contractor must be responsible for gathering additional base line data.

b. Identify the prediction of analysis techniques to be employed for determining the adequacy of specific aspects of the mechanical, electrical, and electronic design, including electromagnetic site surveys.

c. Predicting expected levels of electromagnetic interference. Compare these with predicted susceptibility of signal equipment or sensitive non-signal equipment and assure the calculations (or measured values) demonstrate an adequate safety factor to the susceptibility levels. Include a composite susceptibility graph, considering conducted, radiated, and induced interference.

d. Monitoring progress of tests.

e. Comparison of expected interference levels and Signal System susceptibility, with actual field measurements.

f. Comparison of expected interference levels and Signal System susceptibility with actual field level measurements.

g. Identify any potential problem areas and outline appropriate measures to be implemented to control EMI.

h. Approval of the EMC Control Plan and compliance thereto does not relieve Contractor of the responsibility of meeting applicable requirements of these specifications.

D. EMI Susceptibility Data:

1. Describe EMI levels below which signal equipment proposed will safely and reliably operate.

2. Data may be based on measured or calculated levels, but source and method of obtaining data must be clearly described.

E. EMC Test Program Plan:

1. Describe testing to be performed.

2. Identify signal equipment and systems which may be affected by EMI and tests, both laboratory and field, to be used to characterize EMI susceptibility of equipment and systems.

3. Where prior tests have been performed on equipment in similar applications, test description must include an analysis of differences between tested configuration and that to be used on this project.

4. Include field installation tests of actual interference levels, particularly from vehicles.

5. Include a schedule for performing tests and updating results.

F. EMC Control Data:

1. Periodically present results of above control plan.

2. Data must be accompanied by analyses of suspected interference difficulties and must include suggested mitigating techniques both for Signal System and for source of interference.

3. Test data must be assembled in a single document which must be updated periodically.

G. EMC Certified Test Report:

1. Description of test facility, methods of grounding or bonding equipment (where required) to simulate actual equipment installation, physical layout and cabling or equipment under test, real or simulated dummy loads, and test instrumentation.

2. Modes of operation and operating frequency for each test; control settings on equipment tested; frequencies at which interference may be expected; and performance checks conducted.

3. Results of analysis and tests described above.

4. Data from prior tests can be submitted only with prior approval.

5. Include a composite susceptibility graph, considering conducted, radiated, and induced interference.

6. Graph(s) must constitute criteria for EMI generation from sources, including those within Signal System.

PART 3 - EXECUTION

3.01 FIELD QUALITY CONTROL

A. Field Tests and Inspections: If the EMC control plan documents that some portion of the signal system can be susceptible to existing EMI levels, the Contractor must prepare test procedures and perform field tests to demonstrate safe and reliable performance.

B. Perform field tests for LRV and traction power emissions.

C. Include field installation tests of actual interference levels, particularly from vehicles and catenary wire.

D. Include field installation tests of susceptibility levels of signal equipment found during analysis phase to be susceptible to existing EMI levels.

E. Include field installation tests of radiated susceptibility of signal equipment to magnetic and electric fields.

END OF SECTION

SECTION 34 42 95

SIGNALS RELIABILITY PROGRAM

PART 1 - GENERAL

1.01 SUMMARY

A. Section includes:

1. Requirements for the establishment and maintenance of a System Reliability Program applied to obtain a valid assessment of the Mean Time Between Failure (MTBF) capabilities of the designated equipment and subsystems furnished under this Contract. This program must include:

a. The furnishing of predicted design reliabilities.

b. Field reliability testing and continual comparisons of field reliability testing.

c. The monitoring of equipment and subsystem reliability during the design, testing, and warranty periods.

d. All corrective measures required to obtain predicted reliability.

B. The equipment and subsystems to be tested for system reliability compliance consist of:

1. Vital Microprocessor Interlocking Systems.

2. Uninterruptible Power Supplies.

3. Wayside Signal Layouts.

4. AF Track Circuits.

5. PF Track Circuit.

6. Maintenance Computer.

7. Switch Controller Unit.

8. Switch Machine.

C. Field reliability testing must be on a subsystem basis with the subsystem as defined above. The Contractor must initiate the field reliability testing at Substantial Completion. The testing duration must be one year. If there are no chargeable failures for a given component type within that year, the total hours shall be documented and the component shall be considered as passed. If Chargeable Failures have accumulated to the extent that the requirements for MTBF for the sub-system cannot be met, the demonstration period must be extended in order to obtain the cycles/mean time between failure thresholds specified herein. In the event this causes the demonstration period to extend beyond Acceptance date for ST to start maintenance, the Sound Transit designated personnel must maintain equipment and collect field reliability data. The Contractor must coordinate data collection and analysis with Sound Transit personnel.

1.02 REFERENCES

A. Definitions

B. The following definitions apply specifically to terms used in this Section:

1. Mean Time Between Failure (MTBF): The average time that the equipment will operate without a chargeable failure:

$$\text{MTBF} = \frac{\text{Accumulated operating time of all units}}{\text{number of chargeable failures x number of units}}$$

2. Minimum MTBF: The value specified in the Table of Reliability Requirements by Sound Transit for minimum performance without rejection.

3. Minimum MCBF: The value specified in the Table of Reliability Requirements by Sound Transit for minimum number of switch throws without rejection. The switch throw count is an accumulation total independent of the switch locations doing the throwing.

$$\text{MCBF} = \frac{\text{Accumulative number of switch throws}}{\text{number of chargeable failures}}$$

4. MTTR = restore time accumulated number of chargeable failures. All MTTR estimates will assume the following:

   a. Troubleshooting and repair will be performed by qualified technician who has two years of technical school training and minimum one year of experience and has at his disposal all of the Contractor's printed maintenance literature.

   b. All spare part quantities and test equipment, as utually agreed between the Contractor and Sound Transit will be available and in a state of readiness.

5. Failure Rate: The reciprocal of MTBF. For this reliability assessment program, the failure rate is assumed to be constant throughout the life of the equipment.

6. Independent Failure: A failure which will independently cause equipment performance outside of specified limits - one which occurs without being related to the failure of the associated items.

7. Dependent Failure: A failure of a part which is a direct result of an independent failure - one which is caused by the failure of an associated item(s). Dependent failures are non-chargeable failures.

8. Simultaneous Failure: In the event simultaneous or multiple failures occur, each failed part which will independently prevent satisfactory equipment performance must be counted as an equipment failure.

9. Chargeable Failure: All failures which require repair or replacement of a component or part are chargeable unless specified otherwise herein, or unless determined by Sound Transit to be caused by a condition external to the equipment under test. Failure due to workmanship deficiencies must be counted as chargeable. Transient failures when proven to be caused by a single condition shall be counted only as a single failure. Also, transient conditions which temporarily prevent a function from being successfully performed must be counted as chargeable failures unless it is shown that they are the result of external influences beyond the requirements of this Specification.

10. Non-Chargeable Failures: Failures which are proven to be the result of conditions exceeding those specified, (i.e., floods, derailments, vandalism, human error not normally protected against, etc.) shall be classed as non-chargeable and shall not be included in the reliability evaluation. Failure of parts installed by others (such as insulated joints, rails, normal and reserve AC power sources, etc.) that cause a dependent failure of the Contractor's equipment shall not be included in the reliability evaluation.

1.03 SUBMITTALS

A. General: The Contractor will be permitted to submit reliability data previously acquired from similar equipment and subsystems for predicted reliabilities. If equipment selected is identical to equipment satisfactorily used within the existing Sound Transit operating system, the requirements herein can be waived upon written acceptance from the Resident Engineer. The contractor must submit this request in writing with the specifics of the equipment and where used on the existing Sound Transit system.

B. Reliability Program Plan: Within 60 days after award of the Contract, submit:

1. Organization and responsibilities of the proposed reliability effort.

2. Details of the design and component selection and screening processes proposed to be used to meet the reliability requirements.

3. Details of the procedures proposed to be used to calculate MTBF and MTTR predictions.

4. Identification of the sources proposed to be used for component reliability data.

5. Proposed serialized type forms and reports, including preventive maintenance and discrepancy reports specifically for the joint use of the Contractor and Sound Transit during the field reliability assessment-testing program.

C. Predicted Reliability Reports:

1. The Contractor must submit the predicted reliability study 60 days prior to component procurement. If areas of common failure appear inherent in the specified design mode or equipment, or if Sound Transit determines that the predicted reliability of a subsystem is unacceptable, the Contractor must propose an alternate design or equipment change for the Sound Transit’s approval.

2. Update the reliability report and re-issue each 180 days until design of the designated subsystems is complete. Indicate for each subsystem the estimated percent of design completion upon which the reliability prediction is made.

3. Include in the report, an analysis of items for which the prediction does not meet the reliability requirements or for which the prediction had changed significantly

from the last report. Describe the corrective action proposed in this Section of the report for items predicted not to meet the reliability requirements.

4. Whenever deviations of the predicted reliaibilities are encountered during design (i.e., prior to production), an updated reliability report must be forwarded to Sound Transit. If these reports indicate a marked decrease in predicted reliability, Sound Transit may require an alternate design or equipment change to increase predicted reliability to the requirements specified in the Table of Reliability Goals.

D. Reliability Testing Procedures:

1. Obtain from Sound Transit approval of detailed test procedures before field reliability assessment testing begins. The test procedures must include, but are not limited to, the following details:

a. A listing of components by description, part number, and quantity comprising each line item in the Table of Reliability Goals.

b. Graphical sample presentation of the test plan and table to be used.

c. Burn-in (debugging) time.

d. Performance parameters to be measured.

e. Performance limits beyond which a failure has occurred.

f. Sample report and log forms to be used.

E. Reliability Demonstration Assessment Reports:

1. Once the reliability demonstration test begins, submit reliability assessment report every three months showing comparison of field reliability testing results with accept-reject criteria for each line item in the Table of Reliability Goals.

2. Submit a final reliability assessment report upon completion of specified reliability testing.

F. Maintainability Program Plan:

1. Identify organization and responsibilities of key personnel that will assure maintenance planning are incorporated into design, component selection, and documentation.

2. The preventative maintenance tasks and recommended frequency for each assembly or subsystem are in the manual. If not in a standard component manual, then supplemental material identifying must be provided.

3. Identification of recommended tools or diagnostic equipment has been made in the manual or supplemental material.

G. Detailed fault isolation and troubleshooting procedures are included in the manuals or are developed separately for inclusion in supplemental materials.

1.04 PROJECT CONDITIONS

A. Maintenance Concept:

1. Design and selection of components or subsystems must provide early fault detection and rapid fault isolation to the proper service level to minimize costs and trouble shooting time.

2. There are 3 potential levels of maintenance; on-line, off-line, and bench. Trouble-shooting on-site and replacement to the Lowest Level Replacement Unit (LLRU) is the preferred method of repair.

3. The design and installation must be checked to assure provisions for accessibility for maintenance tasks are incorporated. Without the RE's specific permission, the installation must not require movement of other equipment to access a replaceable part.

PART 2 - PRODUCTS

2.01 MATERIALS

A. Each component in the reliability table must individually demonstrate the predicted and demonstrated ability to meet its goals. The equipment considered part of each line item are identified as follows:

1. Vital Microprocessor Interlocking Systems:

   a. All equipment, wire, terminals, etc. starting at the input and ending at the function outputs. Major components including: signal processor with I/O including any serial or Ethernet data, plug connectors, component PC cards and connectors, capacitors, resistors, fuses, diodes, pushbuttons, switches, and data switching devices between redundant processors.

2. Uninterruptible Power Supplies:

   a. Assembly includes any breakers and switches on the assembly, rectifiers, inverters, bypass or isolation switches, or batteries that would keep the module from providing the required AC output for both conditions of AC input power is available and AC input power is not available.

3. Wayside Signal Layouts:

   a. Include transformers, rectifiers, light bulbs and fixtures, signal housing and mounting fixtures, control and indication circuits.

4. AF Track Circuits:

   a. Includes both detection and cab signal function and track modules, impedance bonds, code selection interfaces and track relays (if used).

   b. Track module with loop couplers, direct cab signal injection modules, or other subassemblies designed to apply speed commands each count as the equivalent of a track circuit.

5. Power Frequency Track Circuit:

   a. Includes 100 Hz Frequency Converter – As a separate MBTF.

   b. Includes the PF track transformers, resistors, vane relays, fuses, and miscellaneous components

6. Maintenance Computer:

   a. Includes the computer and monitor. The keyboard, and optical mouse are external to the computer and not part of the MTBF calculation.

7. Switch Control Module:

   a. Includes the ability to control throw direction, current overload, and time of throw. This reliability is measured in switch throw cycles between failures (i.e., MCBF). It will not be necessary to attach counters or do comprehensive review of event recorder logs for an accurate count of switch throws. Estimation based on sampling of event recording logs or input from operations about the number of trains can be used for a throw count. The throw count does not need to be evenly balanced among switch machines.

8. Switch Machine:

   a. Includes the ability to control throw either direction. This reliability is measured in switch throw cycles between failures. (i.e., MCBF). Major components including: switch motors, gear mechanisms, switch controllers, switch rods, overload relays, rectifiers, fuses and resistors, control and indication circuits, switch machine housing and mounting fixtures, hand throw and hand crank mechanisms.

PART 3 - EXECUTION

3.01 ASSESSMENT PROGRAM

A. Verification that the equipment fulfills the reliability requirements described herein must be per the approved reliability plan and as prescribed herein.

3.02 FIELD RELIABILITY DEMONSTRATION TESTING

A. The reliability of the various equipment types and sub-systems is specified in the Table of Reliability Goals. The minimum mean time between failures must meet or exceed the reliability figures shown in the Table of Reliability Goals.

B. Modify or replace any component part rejected by the reliability assessment program without additional cost to the Contract. Any such modification or replacement must be approved by Sound Transit and is subject to the same reliability assessment program as the original equipment.

C. Reliability tests must start and end as described in this section. Data collection must be per device; per subsystem; for each location with MTBF results cumulative of all like devices.

3.03 TEST PREPARATIONS

A. The Contractor's personnel assigned to participate in field data collection for reliability testing must be fully trained in their assigned tasks and be familiar with the approved reliability test plan. These trained personnel must be the Contractor personnel assigned to maintain the Signal System until the Contractor’s maintenance training class is completed.

B. The Contractor personnel assigned to evaluate reliability data, and supervise the overall execution of the reliability plan must have performed a similar function for at least one prior major transit signals project.

3.04 FAILURE DOCUMENTATION:

A. Report and formally record any malfunction or fault which prevents or limits equipment from performing its function in accordance with these Specifications. The report must include:

1. Failure Rate.

2. Independent Failure.

3. Dependent Failure.

4. Simultaneous Failure.

5. Chargeable Failure.

6. Non-chargeable Failure.

3.05 PROCEDURE

A. Collect Failure Information: The Contractor will collect detailed information on the failures using construction logs, test data, daily maintenance logs, repair room logs, warranty logs, etc. The Contractor may also be required to make visits to the failure sites and to interview signal maintenance personnel.

B. Failure Record: The Contractor must maintain a failure record for each line item on which failure has been collected. The record must be designed to permit keeping of the entire test history of each line item on a single sheet so that behavior of the line items may be easily recognized. This record must contain the following information for each failure reported:

1. Identification of the component and subsystem by location, function, serial numbers, and line item of Table of Reliability Goals to which the equipment is charged.

2. Number of like components and subsystems in service.

3. Date and time equipment was placed in service.

4. Date and time of each failure.

5. Cause of each failure.

6. Classification of each failure (chargeable, not chargeable).

7. Time to troubleshoot from time of arrival on site.

8. Time to repair when spare parts are available on site.

9. Time to restore to operation.

10. All repairs and adjustments made and reasons for same.

C. The record will also include the following analysis of the impact of each failure on the equipment or subsystem reliability:

1. Accumulated operating hours per line item.

2. Accumulated chargeable failures per line item.

3. MTBF calculation

4. Accumulated repair time for chargeable failures (actual troubleshooting and repair time only) per line item.

5. MTTR calculation

D. Preventive Maintenance:

1. Preventive maintenance procedures specified in the approved operating and maintenance manuals for the equipment during normal operation must be performed during the reliability testing period. Any additional preventative maintenance during the period of the Contractor's maintenance responsibility must be recorded and evaluated for their effect on the reliability test.

2. Other maintenance actions required on behalf of other equipment such as troubleshooting, checkout, or downtime investigations shall be termed as preventive maintenance and classed as non-chargeable failures when performed in connection with reliability assessment.

E. Verifying Repair:

1. Following repair or corrective action and prior to resumption of reliability testing, it shall be permissible to operate a maximum one week burn-in test to verify the effectiveness of the repair. Failures and repair time during this period must be recorded and reported but not used in determining compliance with MTBF requirements.

F. Corrective Action:

1. If it becomes apparent that a type of equipment or sybsystem is not achieving the predicted reliability, the Contractor must mmediately notify Sound Transit and develop and propose a plan for correction of the deficiencies. Sound Transit will review such corrective action and may require handling as a design change or modification.

G. Failure Summary Record:

1. Maintain a failure summary record containing all the information needed to reach an accept/reject decision on the system under test. Make all entries directly and require no data processing prior to an accept/reject decision. The summary must include all component failures considered chargeable on all like equipment under test. The record must present the current test status, including information on the total hours of test, failures, and MTBF of all units on test.

H. MTBF Evaluation Criteria:

1. Acceptance or rejection of equipment must be on an individual function basis with the individual functions being the line items presented in the Table of Reliability Goals, below. Accept or reject decisions shall be based upon the procedures, formulae, and definitions specified herein. If test results fall short of the specified hours or cycles then the Contractor is required to propose a corrective action acceptable to Sound Transit that may include a redesign or selection of alternative equipment in the subsystem if necessary. An extension of

the reliability demonstration test shall then restart to prove the corrective action was sufficient.

TABLE OF RELIABILITY GOALS

ITEM	DESCRIPTION	MTBF θ Hours
1.	Vital Microprocessor Interlocking Systems	36,000
2.	Uninterruptible Power System	40,000
3.	Wayside Signal Layouts	50,000
4.	AFTC Track Circuit	50,000
5	100 Hz Frequency Converter	120,000
6	PF Track Circuit	60,000
7	Maintenance Computer	50,000
8.	Switch Control Module	24,000 MCBF
9.	Switch Machine	24,000 MCBF
10.	DC Power Supplies	150,000

END OF SECTION

SECTION 34 42 98

SIGNAL SYSTEM TESTING

PART 1 - GENERAL

1.01 SUMMARY

A. Section includes:

1. Requirements for Signal System factory testing, field testing, and field inspection.

1.02 REFERENCES

A. This Section incorporates by reference the latest revisions of the following documents:

1. American Railway Engineering and Maintenance-of-Way Association (AREMA):

a. C&S Part 2 - Communications and Signal Manual, Railroad Signal Systems.

b. C&S Part 6 - Communications and Signal Manual, Relays.

2. Federal Railroad Administration (FRA):

a. 49 CFR Part 236 - Rules, Standards, and Instructions Governing Installation, Inspection, Maintenance, and Repair of Signal and Train Control Systems, Devices, and Appliances.

1.03 SUBMITTALS

A. Test Program Plan: Signal system testing:

1. Guidance test procedures are available in appendix for Contractor's use in creating their test procedures. These procedures are not created as a standard procedure that can be used without Contractor input and modification for the specific project, location, and/or application being tested. The Contractor retains the option to either independently create procedures or modify these. In either alternative the Contractor's procedures must verify all signal functions, both vital and non-vital for both typical locations with the guidance procedures as a minimum requirement. The Contractor must also create procedures to verify any unique site-specific functions.

B. Source Quality Control: Test Procedures and Test Results for each test.

C. Field Quality Control: Test Procedures and Test Results for each test.

D. Field Test Plan: For cutover of SVP logic to be modified at existing signal house and room locations, that demonstrated that all temporary and final logic configurations will interface with existing LRV operations.

E. Final Test Certification: Prior to placing the signal system into service, the Contractor shall submit a letter signed by the Contractors' authorized representative certifying that all test procedures and results have been completed and meets the technical requirements as specified in the Specifications.

PART 2 - PRODUCTS

2.01 SITE TEST EQUIPMENT AND MATERIALS

A. Test instruments and equipment used during tests must be available, ready-for-use not less than 1 week in advance of test need.

B. Ready-for-use means properly matched for test parameters, properly calibrated, sufficiently supplied with leads, probes, adapters, and stands necessary to conduct the particular test in a completely professional manner.

C. Temporary or interim test related materials, special tools, connections, and jumpers, must be furnished and available not less than one week in advance of test need.

D. Calibration Data:

1. Document calibration date of each instrument used during each test.

2. Calibration of each instrument must be certified by a recognized testing facility.

3. Conduct recertification in accordance with manufacturer recommendations.

4. Out-of-date instruments will be considered non-certified.

5. Tests conducted with non-certified instruments will be rejected.

2.02 SOURCE QUALITY CONTROL

A. Factory Design and Production Tests:

1. Factory test of wire and cable in accordance with Section 34 42 08 - External Signal Cable, and Section 34 42 55 - Internal Signal Cable.

2. Factory test of power distribution shall be made in accordance with approved circuit plans. The Contractor shall verify each energy buss is electrically independent and tested against all other energy buss to ensure that no electrical short circuits are present:

a. General power distribution tests shall as a minimum include Alternating Current (AC) Power Distribution Test, Direct Current (DC) Power Distribution Test, Uninterruptible Power System (UPS) Verification Test, and Ground Detector Verification Test.

3. Factory test and quality assurance plan for the switch heater system and individual components as specified elsewhere in these specifications:

a. At a minimum the following test should be completed: AF Track Circuit Verification, PF Track Circuit Verification, Signal Lighting Verification, Interlocking Operation and Locking Tests, Highway Crossing Verification, Control Line Verification, Line Circuit Verification, TWC Verification, Event Recorder Verification and Vital Circuit Breakdown Tests.

4. Prior to assembled factory rack testing the software must undergo a simulator testing of functions including interlocking, speed command, Train to Wayside Communications (TWC) input, Local Control Panel (LCP) interface, and Train Control System (TCS) interface.

B. Factory System Tests:

1. Relay racks and cases associated with a particular signal room must be interconnected so as to function as one unit.

2. Simulate and monitor external equipment such as signals, switch machines, switch locks, and TWC transponders during these tests. Where equipment is to be installed in existing locations simulate inputs from existing signal equipment during test of new equipment racks.

3. Install relays and Signal Vital Processors (SVP) and non-vital processors (NVP) for this test.

4. Ring-out factory wiring (continuity tested).

5. Check and verify tagging.

6. Perform a wire count to verify number of wires connected to terminal posts, relay plug board receptacle springs, and termination points are in accordance with approved circuit plans.

7. Perform a complete circuit selection (breakdown) test on vital wiring.

8. Open each relay contact (separate openings for heel, front, and back contacts), observe that appropriate relays drop, and observe appropriate signal equipment responds as intended.

9. Perform operating tests to verify that factory wired relay racks function as intended. Use adjacent location equipment, hardware test racks, or emulators and the locations power supplies to verify the equipment and wiring. Factory testing must utilize the actual local control panel and data recorder to verify all signaling functions. Factory tests must duplicate all field commissioning tests using external devices and emulators to simulate field and office inputs and outputs.

10. Perform operation test of all ancillary devices, such as HVAC units, outlets, intrusion detection, fire detection, and alarms. If ancillary devices are to be installed in the field, provide records that they have been factory pre-tested, prior to shipment to the field.

PART 3 - EXECUTION

3.01 FIELD QUALITY CONTROL

A. Field Installation Tests:

1. Relay Field Test:

a. After receipt on-site, prior to installation and testing, inspect relays for shipping damage.

b. Test vital relays in accordance with "shop" requirements of AREMA Communications and Signal Manual Part 6.4.1 (for DC relays) or Part 6.4.5 (for AC relays).

c. Record pickup and drop-away values for vital relays on AREMA relay cards (AREMA Communications and Signal Manual Form 641-1 or AREMA Communications and Signal Manual Form 645-1) and submit to Resident Engineer.

d. Use one AREMA relay card for each vital relay. Use cards shipped with relay.

e. Perform tests prescribed by AREMA Communications and Signals Manual of Recommended Practices, Part 2.4.1, where AREMA inspections and tests do not conflict with requirements of these Specifications.

2. Design tests to show proper operation of each major feature and function of each piece of signal equipment.

3. Wiring Check:

a. Test each wire, cable conductor, and shield with a ringer or buzzer to identify both ends.

b. Check tagging for conformity with approved circuit plans and exact termination points (relay name and contact number, terminal number, and equipment binding post).

c. Apply a check mark to installation copy of circuit plans at each end of each wire tested at the time it is tested and found acceptable. This on-site test applies to wires and cable conductors.

d. Point-to-point testing of rack wiring and tag verification required by this subsection, which is done at the factory, need not be repeated on-site provided:

1) Contractor attests in writing that there have been no changes in rack wiring after completion of factory tests.

2) Contractor furnishes checked-off circuit plans required by this subsection.

e. For field installed wires: Perform a wire count to verify number of wires connected to each terminal post, relay plug board receptacle spring, and termination points is in accordance with approved circuit plans.

4. High Resistance Test:

a. Use a 1000 V megger to determine insulation resistance of each underground cable conductor to ground and between conductors.

b. A minimum of 5 megohms between each conductor and ground and between conductors is required.

c. Disconnect or unplug electronic devices or signal equipment.

d. Follow test equipment manufacturer instructions for operation and electrical connections.

e. Furnish data in a form which complies with FRA "Rules, Standards and Instructions for Railroad Signal Systems", CFR 49 Part 236.

5. Pre-fabricated Signal House Building Function Tests:

a. Test the performance of any building equipment installed in the field. This may include heating or air conditioning, intrusion detection or access control, or fire detection.

6. Breakdown Test:

   a. Perform a complete circuit selection (breakdown) test of relay rack, line circuit, and circuit controller wiring.

   b. Test any and all line circuits between signal locations.

   c. Each circuit must, with circuit energized, have each circuit break point (termination, front contact, back contact, and heel contact.) individually opened by hand to determine that controlled device becomes de-energized with circuit opened and re-energized when test opening is re-closed.

   d. Apply a check mark to installation copy of circuit plans at each circuit break when test shows that it is effective.

   e. During this test, adjacent signal equipment rooms must be functional and connected.

   f. Breakdown tests of rack circuits performed in factory test do not need to be repeated in the field.

   g. In previously existing signal locations perform breakdown test on any circuit disturbed by modifications.

7. Energy Bus Test:

   a. Test energy bus with a 500 V megger, and ensure it is one megohm above ground minimum.

   b. De-energize high voltage buses when they are tested.

   c. At interlockings, perform with each possible route lined up.

8. Power System Testing:

   a. Set power supplies and rectifiers to appropriate values.

   b. Record voltages and transformer tap settings on test report and on as-built circuit plans.

   c. Test signal power converters, power transfer equipment, power distribution equipment, UPS, UPS bypass, and signal power conductors to ensure system functions in accordance with specifications.

   d. Re-calculated spare capacity of power system using test data. Ensure test data calculations meet required operational UPS capacity according to Section 34 42 35 - Signal Power Distribution System.

   e. Perform ground isolation testing. Test all ground detector equipment (positive and negative) to verify performance.

9. Check and adjust timers throughout system and record set values on test report and as-built circuit plans.

10. Test TWC interrogators and TWC system in accordance with manufacturer's recommendations.

11. Perform checks to determine corresponding track relay or device functioning as a track relay drops when a 0.20 ohm shunt is applied successively to each end and in the middle of each track circuit and at each end of fouling circuits.

12. Record and verify correct cab signal strength with a hand held rate decoding device designed for the track circuits installed at:

    a. Transmit end.

    b. Mid-point.

    c. Receive end.

13. Verify cab signal strength in all cab loops meets the specifications.

14. Mainline Power Switches:

    a. Ensure signal protection is provided in the event a switch point is in a position other than full normal.

    b. A 1/4 inch gap, 6 inches from point-of-switch, between either switch point and stock rail causes signal governing movements over switch to display a "STOP" aspect, even if switch points are locked.

    c. Measurements over No. 1 switch rod for both normal and reverse positions of track switch points and ensure that:

        1) Switch point is obstructed 1/4 inch or more and switch and lock movement is manually or electrically operated, obstruction prevents switch-and-lock movement from locking and switch circuit controller indicates that switch is out of correspondence.

        2) Switch-and-lock movement circuit controller contacts are made, when switch point is within 1/8 inch closed. Do not perform test under power.

    d. Test mainline power switches to assure latchout mechanisms, clutches, and overload relays are functioning properly. If switch machines are not equipped with lockouts or if alternative means of providing the overload function are used, then perform all required testing to verify the overload and lockout functions.

    e. Measure and record normal and obstructed switch currents.

    f. Check switch machines to determine locking dog cannot enter slot in lock rod with a 1/4-inch obstruction gauge between stock rail and switch point.

15. System Safety Performance:

    a. Perform test of routing safety functions including parallel route, approach locking, loss of shunt, overrun detection, traffic circuit and locking, and track circuit occupancies for signal clearing (both interlocking and vent zone).

16. Local Control Panel (LCP) and Redundant Signal Vital Processor (SVP) Testing:

    a. Verify all LCP controls and indications including track circuit, interlocking, traffic, alarms, cold start-up requirements, and requirements of transfer

between Normal SVP, Standby SVP, and back to Normal SVP operate as specified in the LCP section.

b. Verify all SVP operations and status are transferred between Normal SVP, Standby SVP, and back to Normal SVP as specified in the SVP section.

c. Verify each indication performs correctly for each condition, this must include but not be limited to alarms and equipment statuses like power, communications, ground, and grade crossings.

d. Verify each control can achieve the correct response from the logic and wayside equipment. Also verify that the controls are de- activated when the LCP is not in Local Mode.

17. Switch Heater System Testing:

a. Test switch heating elements and controls to assure that they function correctly.

b. Functions to be tested and verified include at a minimum each element is heating, manual controls operate, cabinet indications operate, the sequence start functions properly, and that the controls and indications at the LCP and LCC operate.

c. Use the manufacture recommended test procedure to test the heating system to:

1) Artificially lower the temperature of the ambient air temperature sensing unit and the rail temperature sensor and artificially raise the humidity sensing unit if necessary to verify that the heating elements are energized. Repeat this for each trun-out by lowering the temperature of the rail temperature of the rail temperature sensor at each turn-out.

2) Use a product recommended by the manufacture to lower the temperature at the sensors.

3) Verify that rail temperature sensor units shut off the heaters at each turn-out when the upper temperature is reached.

18. Record the ambient air temperature level and rail temperature of each turn-out that the heaters turn on and off at and submit to Sound Transit.

B. Field Static Tests:

1. Prepare and perform test procedures to:

a. Setup the signal processors.

b. Setup, adjust, and test track circuits for shunting and cab signal strength.

c. Setup, adjust, and test all other signal equipment.

2. Test procedures must be divided by equipment type and function. They must include at a minimum:

a. Timing Device Test: Verify that each timer setting is correct in both the Normal and Standby processors.

b. Entrance – Exit Test: Use the LCP to verify the logic for all entrance and exit calls. This must include:

1) Exit available displays for each entrance call in all parallel and conflicting route conditions.

2) Traffic circuit calls.

3) Switch position calls.

3. Detector Locking Test:

a. Verify when power is removed from the OS track circuit the switch cannot be moved under power.

4. Time and Approach Locking Test.

5. Route Locking Test: Must verify route security and also sectional release when appropriate.

6. Traffic Locking Test:

a. The adjacent interlocking to interlocking under test must be functional for this test.

b. Verify traffic direction is called and locks upon occupancy of the block and direction is maintained if signal processor in control fails.

7. Blocking Test:

a. Verify the function of switch blocking and that it is maintained regardless of transfer of control mode.

b. Verify signal blocking prevents the use of the signal blocked as an entrance for a route.

c. Verify track blocking prevents entrance into the track from the interlocking on either end. Verify that the block when applied at an adjacent location is indicated on the LCP and in effect at the location in test.

8. Fleeting Route Request:

a. Verify that when a route is fleeting the route is recalled.

b. Verify that cancel of a signal also cancels fleeting but cancel of fleeting only cancels the fleeting and does not cancel the route.

c. Verify that at locations that have approach clear signals with an automatic cancel if no trains are in the approach are not able to maintain the fleeting in auto mode but will maintain the fleeting with a train in the approach.

9. Over-run Detection Test: Verify that when a train over-runs a signal at stop an over-run alarm is triggered and the alarm state is maintained until the train is no longer bridging the insulated joint associated with the entrance signal.

10. Auto and TWC Routing Request Test:

a. Verify that in Auto Mode approach clear routes are maintained if interlocking conditions do not permit the route immediately. Verify this true whether the route call is approach cleared with a TWC request of just approach cleared with track occupancy.

b. Verify that approach cleared routes can be canceled unless the route is requested by TWC or the interlocking has be changed to different mode.

c. Verify that route calls via approach clear with a TWC destination call are maintained until completed even if a following train should call a route from the same TWC loop.

d. Verify that TWC loop calls/ canceled are only decoded if the TWC loop track circuit is occupied.

11. Event Recorder Test:

a. Verify all function/ variables required to be recorded at the location are being recorded.

b. Verify that event recordings form multiple signal processors (1, 2, 3… or A, B, C,.. and Normal/ Standby) are compiled by time and are easily identifiable, which processor and time-date stamp.

c. Verify that the all of signal processors time-date stamp is automatically synchronized.

12. Grade Crossing Warning Test:

a. Simulate an approaching train by opening or dropping track circuits on the crossing approach for all tracks and directions.

b. Verify the proper operation of all crossing warning devices gates, flashers, and bells.

c. Verify that each of the traffic loop detectors prevents the exit gates from lowering.

d. Verify that the entrance gates fail down and exit gates fail up.

e. Verify all pre-empt outputs functions.

f. Verify the near-side crossing operation and their effect on cab speed commands where applicable.

g. Verify all status and alarm functions.

h. Verify the crossing by-pass functions.

i. Verify second train coming functionality and signs.

j. Verify with two trains on approach (one on each track), verify the first train clearing the crossing doesn’t cancel the crossing while the second train is still on approach.

13. Non-Vital Performance Testing:

a. Perform tests on non-vital interlocking functions such as route requests and alarms.

b. Test local control panels, signal maintenance computers, portable maintenance computers, and event recorders to ensure they function as designed and meet performance requirements.

C. System Integrated Tests:

1. Simulate movement of trains by applying shunt wires to track circuits and placing test TWC transponders over appropriate TWC loops.

2. Design tests to determine that appropriate signal aspects are observed, appropriate cab signal currents are present, and cab signal coach lighting is operating as intended.

3. During this test adjacent signal equipment rooms must be functional and connected.

4. Observe appropriate signal aspects, for both conflicting and non-conflicting routes, are displayed and detector, approach, indication, and route locking are effective for interlocking routes.

5. Test route request combinations.

6. Design tests to ensure appropriate routes are granted.

7. LRV Dynamic Tests:

a. LRVs provided and operated by Sound Transit.

b. Check routes and route requests, car clearance, and signal visibility.

c. Safe Braking Test.

d. Check and record warning times and operations of joint operations merge.

e. Speed Command/Continuous Cab Test:

1) Verify speed commands are received throughout each route and section of track.

2) Trains must traverse routes at an 8 mph maximum speed during test.

3) Measure cab signal reception on LRV to verify no dead spots in reception.

4) Sound Transit will provide test points to verify reception of cab frequency on vehicle ATP package.

f. Pre-Shunt and Post-Shunt Tests:

1) Measure and record pre-shunt and post-shunt of each jointless track circuit while moving Sound Transit furnished trains slowly across track circuit boundaries.

2) This test may be combined with cab signal testing.

g. Cab Signal Tests:

1) Conduct with a Sound Transit furnished LRV and train operator.

2) Generate correct speed command and observe and verify command on LRV.

3) Ensure correct cab signal is received by LRV as shown on approved control line drawings.

h. TWC Tests:

1) Using a 2 car LRV train set, test the reception of the lead cab, both intermediate cabs, and the trailing cab TWC transponders are received at each TWC loop.

2) Using a 4 car LRV train set, verify LRV TWC ID, Train ID, Destination Code and Vehicle IDs data are being captured and transmitted accurately.

8. Train Control System (TCS) Interface Integration Tests:

a. For integrated testing details see Section 01 95 00 - System Integration Requirements. For controls and indications to be tested see Section 34 42 65 - Central Control Interface

b. For tests designated as the Contractor's responsibility, perform the test and request support from others if it is essential to complete the test. For integrated tests by others, provide support to verify combined system performance whenever LRV signals interface with other systems.

c. Provide personnel to monitor condition of signal equipment, align routes, observe LRV signals and other equipment during integrated testing when required.

d. Verify system logic provides integrated operation from Link Control Center (LCC) via TCS system.

e. As a prerequisite, verify serial data transmission to/from signal processors as matching approved code charts using a simulated LCC.

f. Provide personnel at signal room being tested for generating indications and verifying responses to LCC controls.

g. Perform a preliminary LCC to signal processor communications compatibility test for first room location installed.

9. Highway Grade Crossing Warning Integration Tests:

1) Perform after pre-requisite tests: static grade crossing warning tests, cab signal tests, speed command/ continuous cab tests, and other testing to allow LRV operations up to maximum allowable cab speed.

2) Verify Train Control and Traffic Controller interface ensuring crossing warning times are consistent with design.

3) Coordinate the timing of these tests to allow them to be witnessed by Sound Transit and by the Authorities Having Jurisdiction over the crossing.

END OF SECTION

SECTION 34 42 99

SIGNAL SYSTEM TECHNICAL SUPPORT

PART 1 - GENERAL

1.01 SUMMARY

A. Section includes:

1. Requirements for the following:

a. Procurement, delivery, handling, and storage of spare parts and special tools.

b. Maintenance of Signal System.

c. Training of Sound Transit personnel.

1.02 SUBMITTALS

A. Submit list of suggested support material including the following:

1. A list of recommended technical support material with individual unit prices and quantities.

2. A separate list for those parts and tools specified to be delivered as part of the Contract within this Section with individual unit prices and quantities.

3. Additional items recommended by Contractor for maintenance of equipment and systems furnished by Contractor under this Contract with individual unit prices and quantities.

B. Parts inventory List: Provide computerized lists in the format of Sound Transit maintenance system parts inventory list for the Contractor's furnished parts under this Contract.

C. Maintenance Plan: Must be approved by Sound Transit 21 Days before any equipment with maintenance requirements is installed:

1. Preventive Maintenance: Tasks performed to minimize possibility of future equipment failure, reduce or minimize wear rates, replace consumable parts and satisfy warranty requirements.

2. Identify each preventative maintenance task and frequency required to properly maintain Signal System in accordance with manufacturer's recommendations.

3. Describe general methods Contractor will use to perform Signal System Maintenance, until accepted by ST to perform maintenance.

4. Provide a detail description of maintenance procedures to be performed. Base maintenance procedures on requirements of manufacturer's maintenance manual.

5. Outline each preventative maintenance task, schedules, recommended tools, personnel, and skill levels required.

6. Base recommendations on experience of Contractor and of equipment suppliers.

D. Maintenance Training Class Syllabus: That describes the class subjects and schedule. Each syllabus must include an outline of the course material, details of the textual materials, and descriptions of the visual aides to be used.

E. Engineering Training Class Syllabus: That describes the class subjects and schedule. Each syllabus must include an outline of the course material, details of the textual materials, and descriptions of the visual aides to be used.

F. Closeout Submittals:

1. Operation and Maintenance Manuals: In accordance with Section 01 78 23 - Operation and Maintenance Data.

2. Project Record Documents: In accordance with Section 01 78 39 - As-Built Documents.

3. Training: Submit plan and materials in accordance with Section 01 79 00 - Training.

4. Record Documents: Final Parts Inventory List.

1.03 QUALITY ASSURANCE

A. Other than test equipment, furnish support materials identical in quality to components or assemblies furnished under representative Section in these Specifications.

1.04 DELIVER, STORAGE, AND HANDLING

A. Part Identification: Label (box, shrink wrap, and bubble wrap) each item with part number, a part description, and quantity within enclosure:

1. Provide complete bill of materials in container; including part number manufacture's part number, part description, quantity, and when applicable, revision number.

B. The number of crates and packages, and packing list must be submitted to Sound Transit for approval prior to shipment.

C. The Contractor must ship all approved support material equipment to the area designated by Sound Transit, prior to the time that the system is scheduled to be placed in service.

D. Any items having a limited shelf life must be clearly identified on the storage container with the expiration date.

E. Obtain receipt from Resident Engineer prior to final payment.

F. All equipment provided under this Section must be packaged in a manner to protect all items from conditions that might have a detrimental effect.

PART 2 - PRODUCTS

2.01 SPARE EQUIPMENT

A. Provide spare equipment no later than 30 days prior to the start of testing.

B. Relays:

1. Five of each type of vital relay used.

2. One additional vital relay for each 16 vital relays used Contract wide.

3. Four vital relay plugboards of each type used.

4. Six of each type of non-vital relay used.

5. One additional non-vital relay for each 12 non-vital relays used Contract wide.

6. Four of each type of non-vital relay sockets.

7. Six of each type of relay spring clip used Contract wide.

8. Four relay wrench and insertion tool sets for plug-in type relays furnished.

C. Wayside Signals:

1. One three-aspect signal for each interlocking signal provided. This equals a total of four, one of each type (right/left diagonal aspect, pole/wall mount).

2. One two-aspect signal suitable for pole mounting.

3. One two-aspect signal suitable for wall mounting in the bore.

4. Three of each type of LED assembly used in the wayside signals.

5. One four-aspect signal for each configuration of each signal provided.

6. One bumping post stop signal.

D. Switch Machines:

1. Two of each type of switch machine layout complete with at least two of each type of electric switch machine (one RH and one LH) rod, gauge plate extension, insulators, rail attachments, lugs and other hardware needed to mount and install a switch machine.

2. Two of each replaceable module, component, or kit given a unique part number in the switch machine manufacture's manual for each type of switch machine supplied.

E. Audio Frequency Track Circuit Equipment:

1. One of each type of impedance bond used.

2. One additional impedance bond for each 25 of that type used Contract wide.

3. In the event that an impedance bond is universal for all AFTC frequencies with external tuning, provide five impedance bonds and two sets of tuning equipment for each type used.

4. One set of B point (or tuned receiver equipment) for each type used. Provide one of any equipment necessary to replace each type of B point installation provided.

5. Two of each type of PC board or assembly mounted to an audio track circuit module. In the event more than 20 of a type are used contract wide, provide one additional for each 20 used. If the supplied track circuits have a single module as the lowest replaceable unit, provide two modules for each type used Contract wide, provide one additional for each 20 used.

6. Two of each type of any equipment used to apply a speed command into a single rail track circuit or wire loop. In the event more than 20 are used, provide one additional for each 20.

F. Signal Vital Processors (SVP):

1. Two SVP assemblies, complete with boards capable of replacing the largest interlocking locations.

2. Two additional printed circuit boards of each type used in an SVP assembly Contract wide.

3. Two selector devices of each type that allows dual processors to interface as one processor to other processors, Train Control System (TCS), or other devices, including any internal or external modems.

4. One pre-programmed memory chip or vital and non-vital chip set for each SVP location conforming to as built configuration.

5. Five sets of blank chips capable of being loaded with program modifications by the firmware development tool.

6. One Signal Maintenance Computer (SMC)

G. Power Frequency Track Circuits:

1. Two of each component used to provide a power frequency track circuit as used in the system.

H. Train to Wayside Communications (TWC) Equipment:

1. Two TWC interrogator modules, complete with a full complement of boards for immediate application.

2. Two TWC Loop Converters.

3. Two TWC loop assemblies

I. Audio Overlay Track Circuit:

1. Two of each component used to provide each overlay track circuit as used in the system. In the event that tuned PC boards of the components are used, provide one of each used for all track circuit frequencies used.

J. Power Equipment:

1. One uninterruptible power system of largest capacity used on the job.

2. One spare of each type of power supply used Contract Wide.

3. One spare of each type of circuit breaker used Contract wide.

4. One spare of each type of disconnect switch used Contract wide.

5. One spare 100Hz frequency converter of largest size used on job.

K. Cable Terminations:

1. 20 of each type of Cembre rail connection used.

2. 20 of each type of lug used for impedance bond connections.

3. 20 of each type of lug used for power frequency track circuit connections.

4. 20 of each type of lug used for rail bonding connections.

L. Miscellaneous:

1. Five of each type of fuse.

2. Two of any type surge protection arrestor used.

3. Two of each type of component mounting block for fuse, arrestor, or resistor used in the job.

4. One of each type of electrical device used: crossing controller, battery, and battery charger.

M. Event Recorder: Provide one spare event recorder assembly capable of replacing the largest recorder used.

N. One of each type of junction box used Contract wide.

O. Switch Heater Equipment:

1. One spare switch heater control cabinet, fully equipped and configured to control the largest installation.

2. 4 of each type and length of rail rod heating elements.

3. 4 of each type of crib heating elements.

4. 4 of each type of moisture and ambient air temperature sensors.

5. 4 of each type of rail temperature sensors.

6. 20 of each type of clip necessary to secure the rail heating elements.

7. 4 of each piece of equipment necessary to make up a switch heating system no included above.

P. Spare Cable:

1. Provide continuous lengths of the following cables, on non-returnable cable reels or spools, to Sound Transit, as spare cable:

a. 1000 feet of each type, size, and configuration of multiple conductor cable used on the job.

b. 500 feet of both 250 kcmil and 500 kcmil traction power bonding cable.

c. 250 feet of each size and type of case wire used on the job.

d. 100 feet of any type of cable used to form any type of “B” point or track circuit receive point loop used Contract wide.

e. 650 feet of cable for cab speed command loops.

Q. Special tools:

1. Provide special tools in new and unused condition.

2. Provide the following special tools to Sound Transit:

a. Five hand-held devices to simulate carborne TWC transponder capable of battery operation and generating variable TWC messages.

b. Two tools specially designed to measure the modulated audio frequency track circuits and CAB current in the rail, DRD or equivalent.

c. Two set of Battery powered Cembre tools that can drill and install Cembre bolted rail connections including dies, crimpers, rail drill, and swaging tool.

d. Railroad signal multimeter, Triplett or approved equal.

e. Railroad signal cable Megger tester, S&C or approved equal.

f. Railroad ground finder, S&C or approved equal.

g. Railroad short finder, S&C or approved equal.

h. Insulated joint tester, S&C or approved equal.

i. Railroad arrestor tester, S&C or approved equal.

j. Two sets of switch wrenches

k. One hand crank per two switches.

l. One E-post wrench in each signal and crossing bungalow plus four spares.

m. AC vane relay tester.

n. Relay slide for rack-mounted B-relays.

o. Four switch obstruction gauges.

p. Two magnetic test shunts and two clamp-on test shunts with adjustable resistance, S&C or approved equal.

q. EEPROM tester, Questrail or approved equal.

3. Provide a minimum of two tools (other than general hand-held tools) which the Contractor uses to adjust or test the signal system that may not have been previously mentioned.

R. Portable Maintenance Computers and Test Equipment:

1. Provide two laptop computers with capabilities equal to SMC.

2. Provide cables, software, firmware, and hardware to interface with SMC or directly with event recorders, TWC systems, UPS, non-vital microprocessor system, or vital microprocessor systems.

3. Provide a spare battery and ruggedized carry case for each portable maintenance computer.

4. Ruggedized carry case must be of sufficient size to contain laptop computer, spare battery, cables, and other required hardware.

5. Provide manufacturer recommended equipment and software for test and maintenance of microprocessor and signal system equipment.

6. Ensure it is not possible to alter either vital or non-vital application logic using portable maintenance computer.

7. Provide permanent markings reading “Property of Sound Transit” on each piece of equipment.

8. Deliver portable maintenance computers to Sound Transit in new and unused condition.

9. Delete entertainment applications such as games or media viewers before submission to Sound Transit.

S. Mobile Generator Sets:

1. Provide two trailer mounted mobile generator sets in accordance with emergency/stanby power systems generator set(s) section found elsewhere in these specifications.

2. Provide two sets of generator cables, minimum 50 feet in length with appropriate connectors to connect generator to bungalow.

PART 3 - EXECUTION

3.01 CLOSEOUT ACTIVITIES

A. Training:

1. Prior to the start of Integrated Testing.

2. Duration and Classes:

a. Four weeks total.

b. Two identical class sessions.

c. Ten students per class.

d. Minimum session length on continuous 5 day week.

3. Signals Training topics include but are not limited to the following:

a. Mainline Power Switch Machine Maintenance, Repair, and Troubleshooting.

b. Signal and Indicator Maintenance, Repair, and Troubleshooting.

c. Non-Vital, and Vital Interlocking Circuit Operation.

d. Theory of Circuit Design, System Operation, Circuit Nomenclature and Abbreviations, Troubleshooting.

e. Track Circuit Maintenance, Repair, and Troubleshooting.

f. TWC System Wayside Maintenance, Repair Troubleshooting.

g. Signal Processor Maintenance, Repair (to the PC board or other module replacement level), and Troubleshooting: Include information about the LED indicator level trouble shooting, laptop interface with processor, downloading event recordings, and software functions.

h. Local Control Panel Operation, Repair, and Troubleshooting.

i. Signal Systems Drawings: Providing in-depth instruction on nomenclature, symbols, and circuit development philosophies.

j. Uninterruptible Power Supply System Maintenance, Repair, and Troubleshooting.

k. Ground Detector Maintenance and Repair.

l. Procedure for Location of Grounds.

m. Switch Heater System.

n. Crossing loop vehicle detector equipment.

o. Crossing warning control and field equipment.

p. Any new equipment previously not used at Sound Transit or new applications of existing technology provided as part of project.

4. Final class syllabus as agreed upon by Contractor and Sound Transit. Sound Transit reserves the right to drop specific subjects from the syllabus and require greater emphasis on other subjects.

5. One manual in a three-ring binder with hard copies of all class materials.

6. Soft copies of all class materials to Sound Transit Train Control engineering.

END OF SECTION